STOP!

DO NOT READ THIS BOOK WITH ADOBE READER!!!

DON'T USE ADOBE to read this book **because it takes forever to open, navigate and print** (large/complex books).

Fast and Free Alternative PDF Readers:

All the alternative PDF readers listed below display this book quickly and properly on PC computers. For mobile devices (tablets and smartphones) search your app store for good PDF readers; we suspect that Adobe might be your worst choice there, too. Once you open the book in one of these alternative readers, set your view to FACING PAGES or whichever setting that suits your comfort and screen size.

Foxit Reader

FREE DOWNLOAD: https://www.foxitsoftware.com/products/pdf-reader/

Nitro PDF Readers for Windows

FREE DOWNLOAD: https://nitro-pdf-reader.en.softonic.com/download

PDF-XChange Viewer

FREE DOWNLOAD: https://www.tracker-software.com/product/pdf-xchange-viewer

Sumatra PDF Viewer

FREE DOWNLOAD: https://www.sumatrapdfreader.org/download-free-pdf-viewer.html

The GREEN SCIENCE of WATERFUEL

Free Energy Secrets “THEY” Don’t Want You to Know

Ozzie Freedom, George Wiseman, William Rhodes, Sir Anthony Griffin,
Moray King, Chris Eckman, Andrija Puharich, P.M. Kanarev, R.M. Santilli,
Viktor Schauberger, Tyler van Houwelingen, et al.

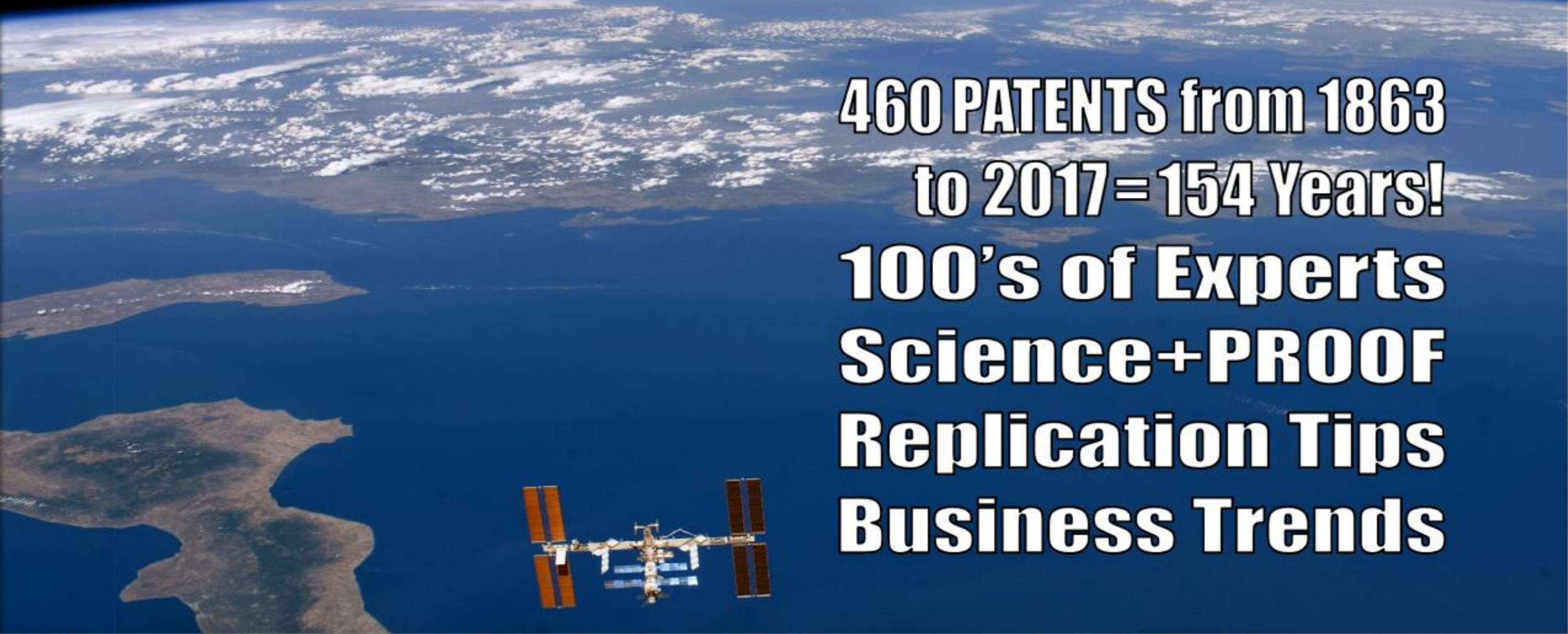

460 PATENTS from 1863
to 2017 = 154 Years!
100’s of Experts
Science+PROOF
Replication Tips
Business Trends

Title: The GREEN SCIENCE of Waterfuel:
Free-Energy Secrets “THEY” Don’t Want You to Know
VOLUME 1 of 2

Authors: Ozzie Freedom, George Wiseman, William Rhodes, Sir Anthony Griffin, Moray King, Chris Eckman, Andrija Puharich, P.M. Kanarev, R.M. Santilli, Viktor Schauberger, Tyler van Houwelingen, et al.

Edition: Fourth Edition, June 2017

ISBN:

Publisher: 1Freedom.com eBook Publishers

This book is a non-profit educational project that supports Waterfuel and all Cleantech. If you wish to reprint this book (no cost, no royalties) please contact the Publisher for ready-to-print files, low-cost printers and free advice.

IMAGES: Unless otherwise noted, photos and artwork were shot or created by the author, or obtained from royalty-free resources: PublicDomainPictures.net, Clker.com, Wikimedia Commons, NASA, U.S. Patent Office and other public domain resources, or borrowed on a fair-use basis as this is a non-profit publication for educational and research purposes. Photos and illustrations attached to textual descriptions quoted from other authors belong to their respective authors although some have been edited to fit this publication.

175 Acknowledgements

In researching for this book I used truckloads of scientific material that we're all lucky to have today thanks to the discoveries and understandings provided by the genius scientists, smart inventors, dedicated experimenters, clever researchers and science/patent publishers who blazed a trail and showed us the way. I'd like to thank everyone who contributed, including the many, many people whose names are not listed here:

Juan Carlos Aguero
Waqar Ahmad
Prof. Dr. Hüseyin Akilli
Prof. Dr. Murat Aksoy
Herman Anderson
Archimedes
Prof. Dr. Kadir Aydin
Saiful Bari
Andrew Batty
Thomas Bearden
Eshel Ben-Jacob
Roger Billings
Archie Blue
Albert Bow
Bob Boyce
Robert Boyle
Prof. Yull Brown
Henry Cavendish
Francisco Celani
Carl Cella
Donald Cerini
Martin Chaplin
Nicolas Chauvin
Prof. Chun Shun Cheung
Arthur C. Clarke
Francois Cornish
Peter Crunk
Leonardo DaVinci
Jerry Decker
Daniel Dingle
Detlef Dohmen
Zafer Dülger
Jean-Christophe Dumas
Steven Eaton
Chris Eckman
Dustin P. 'Eletrik' ("Smack")
Yehia Eldrainy
Mohamed EL-Kassaby
Dr. Masaru Emoto
Rudolf Erren
Mohammad Esmaeil
Michael Faraday
Martin Fleischmann
Hugh Flynn
Charles Frazer
Dr. Frank Frungel
Gustav Fuehler
Sergey Gannotsky
Luigi Galvani
David Gann
Charles Garrett
Carl Friederich Gauss
Robinson Gourley
Peter Graneau
Art Green
James Griggs
Rudolph Gunnerman
Stephen Hawking
Horace Heffner
Gary Hendershot
Stephen Horvath
John Houseman
Tyler van Houwelingen
"Joe-X" (Joe Cell inventor)
Philipp Kanarev
Song Doug Kang
John Kanzius
John Keely
Mike Kehrli
Zoltan Kémeri-Greguss
Mohamed Khidr
Kareem Khidr
Sang Nam Kim
Moray King
Dennis Klein
Dave Lawton
Mark LeClair

more

Moshe Lerner
Dr. Chi Wah Leung
Hendrik Loggers
Eugene Mallove
Jeane Manning
Lars Månsson
Mori Masahiro
James Clerk Maxwell
Ronn Maxwell
Roy McAlister
Rick McKean
Drunvalo Melchizedek
Stanley Meyer
Mayor Lollis Meyers
Andrew Michrowski
Randell Mills
Wilhelm Mohorn
Luc Montagnier
Yoshiro Nakamatsu
Jean-Louis Naudin
Robert Nelson
Isaac Newton
George Noory
Ryushin Ohmasa
K.R. Özçelık
Francisco Pacheco
Henry Paine
Paul Pantone
James Patterson
Jim Payne
Stanley Pons
Thomas Prevenslik
Andrija Puharich
Ravi Raju
Andrea Rampado
Nattan Ravichandran
William Rhodes
Francois de Rivaz
Alex Rivera
James Robey
Len Rosen
Andrea Rossi
Vernon Roth
Johannes Rydberg
Ruggero Santilli
Viktor Schauberger
Arnold Schwarzenegger
Alex Schiffer
Lewis J. Schneller
Robert Scragg
Dr. R. Senthil
Jeffrey Serfass
Aly Hafez Shaaban
Joe Shea
Boris Shelishch
Ken Shoulders
Ilia Sinelnikov
P.T. Sowba
Ernst Spirig
Joe Spiteri Sargent
Olof Sten
Roger Stringham
Ted Suratt
Nikola Tesla
Aviv Tzidon
Thomas Valone
Robert Vancina
Jason Verbelli
Jules Verne
Gijsbert Versteeg
Gary Vesperman
Ray Warren
Charles Weber
Freddy Wells
David Wenbert
Bill Williams
Dan Winter
William Woollard
Ali Can Yilmaz
Jian Hao Zhou
Paul Zigouras
W. Thor Zollinger

Special thanks to ***Tom and Bill Lang*** and ***George Wiseman*** who taught me the basic Waterfuel open source technology, to 18-wheeler truck owners-operators ***Jerry Young*** and ***Carter Blankenship III*** who have experimented on their own trucks and contributed their findings for the benefit of other truckers, to ***Patrick J. Kelly, Pini Abergil, Nexus Magazine*** and members of ***Water4Gas Experimenters Club*** for their extensive research, moral support and continual inspiration. ~Ozzie

DISCLAIMER

You must read this page carefully as it governs the legal relationships between you and the Authors and Publisher.

Some of the views, ideas and information provided in this book represent the Authors' opinions and have been neither verified nor approved by any authority on science, economy or health.

None of the technologies, methods, references and testimonials described herein is to be regarded as legal advice, medical advice or investment advice to any reader for any purpose or application.

The information described and/or illustrated in this book is provided as-is. Furthermore, reference or description of any invention or technology in this book does not constitute a recommendation for investment of any kind – reader discretion strongly advised. There is no guarantee expressed or implied concerning the suitability of the information for any particular application, circumstance or geographical area. Wherever reference is made to other authors, inventors, websites, publications, Patents and/or products, such references are provided for informational/educational/inspirational purposes only and no claims are made hereby as to their correctness or workability. To inquire about their correctness and workability, as well as respective copyrights, contact the respective authors, inventors or manufacturers.

MANY TECHNOLOGIES DESCRIBED HEREIN ARE EXPERIMENTAL, THUS ALL RESULTS FROM THEIR IMPLEMENTATION ARE AFFECTED BY MANY FACTORS, INCLUDING: MACHINE OR ENGINE TYPE AND THEIR MECHANICAL CONDITIONS ESPECIALLY THE HEALTH OF SENSORS AND FUEL SYSTEMS, AMOUNT OF CARBON DEPOSITS, OIL GRADE AND ITS QUALITY/CLEANLINESS, FUEL GRADES WITH THEIR MANY SEASONAL AND REGIONAL MIXES, MODEL YEAR AND SOFTWARE BATCH WITHIN THE YEAR, OPERATING CONDITIONS AND WORK LOAD, WEATHER CONDITIONS (AIR TEMPERATURE, MOISTURE, BAROMETRIC PRESSURE, WIND VELOCITY AND WIND DIRECTION, AIR CLEANLINESS AND ITS OXYGEN LEVELS), ALTITUDE, QUALITY AND AGE OF COMPONENTS IN THE SYSTEM(S), PROPER INSTALLATION, PROPER TUNING, PROPER DATA COLLECTION, POWER LINE FREQUENCY AND MORE. ***Nobody can accurately test all the possible combinations of so many factors;*** *AS A DIRECT RESULT OF SUCH DIVERSITY OF CONDITIONS, NONE OF THE TESTIMONIALS AND REPORTS OF PAST RESULTS MAY BE REGARDED AS GUARANTEE OF FUTURE RESULTS.* ***THEREFORE NO SPECIFIC RESULTS CAN BE GUARANTEED TO THE READER FOR ANY ENGINE, GENERATOR, TURBINE, TORCH, BOILER, HEATER, COOKER, MARINE VESSEL, POWER PLANT, WELDING TORCH, OR FOR ANY OTHER MACHINE, PURPOSE OR APPLICATION.***

Use of the information and any technology, as well as any related devices, products or methods, is at your own risk. This book is not guaranteed to be free of errors or omissions.

Although careful precaution has been taken in the preparation of this book, the Authors and/or Publisher shall not be held liable to you for damages, including any general, special, incidental or consequential damages arising out of the use or inability to use this information, including but not limited to loss or personal injury or losses sustained by the user or third parties or a failure of the related technologies to operate or to produce expected results, even if such user or other party has been advised of the possibility of such damages. The information herein is not intended for use in violation of local laws and regulations which may be applicable to your geographical area. Compliance with any law, where applicable, is your responsibility. The Authors, the Publisher, their heirs, employees and distributors shall not be held responsible for how you use this information or any related device or service. ***THE READER IS CHARGED WITH THE RESPONSIBILITY OF PROPERLY USING AND MAINTAINING THE WORKABILITY AND SAFETY OF USE OF SAID TECHNOLOGIES.*** All manufacturers, merchants, service personnel and providers of information/consultation who may be found in this book, or in links and references, are responsible for their own work and no guarantee is given by the Authors and/or Publisher for their competence or work ethics.

If you do not agree with these terms then do not use the information provided in this book in any way, shape or form

TABLE OF CONTENTS

Chapter **Page**

VOLUME-1

VOLUME-2

While browsing this book you may encounter this “emblem” in several places. It simply comes to denote that the information included here is only the tip of iceberg-size information that’s out there on the subject – and on the deep validity – of Waterfuel. I provided, as do the other distinguished scientists and investigators who contributed to this book, references to many other sources, experts, Patents and publications. In one estimate, there are at least 10,000 more pages that couldn’t possibly make it into this book, but you can find them in the references and download links. *~Ozzie*

P.S. Yes, I know, the kitty has grammar issues… (like me).

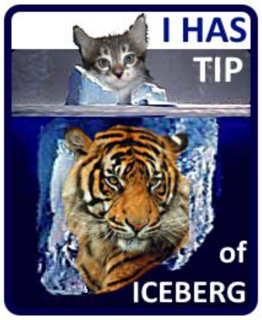

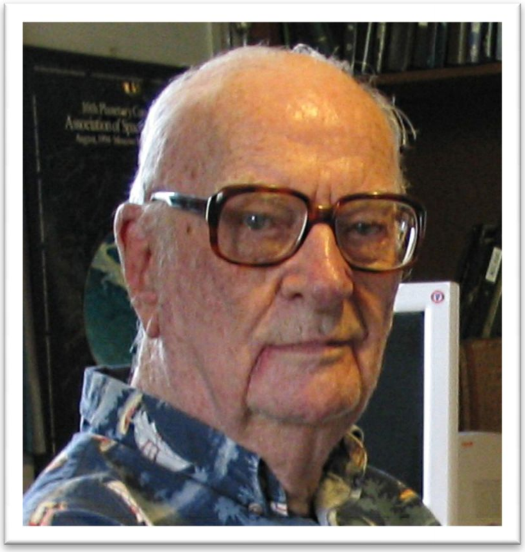

Arthur C. Clarke (1917-2008) was a bestselling science and sci-fi author, and a futurologist. During WW2 he served in the Royal Air Force as a radar specialist and was involved in the early-warning radar defense system, which contributed to the RAF's success during the Battle of Britain.

In 1995 William Woollard produced and narrated, and Lawrence Simanowitz directed, a documentary titled ***"It Runs On Water"*** that featured inventors James Griggs, Stanley Meyer, James Patterson and Nikola Tesla, as well as several scientists. Clarke opened the movie with this statement:

"I think there's a strong possibility that we're at a turning point in history, a complete revolution in human affairs, with the discovery of totally new energy sources. Many people are skeptical of this, but I think we may be going through the four stages of any revolutionary development:

(1) "It's nonsense, don't waste my time"

(2) "Oh, it's interesting but not important"

(3) "I always said it was a good idea" and

(4) "I thought of it first."

Luigi Galvani Said:

> "I am attacked by two very opposite sects – the scientists and the know-nothings. Yet I know that I have discovered one of the greatest forces in nature."

Luigi Aloisio Galvani (1737-1798) was the Italian physicist who has discovered important electricity basics and laid down the basis for further developments by Alessandro Volta and others.

Foreword by George Wiseman

My innovation business started in 1984 when I developed the Carburetor Enhancer, which increased mileage by 25% using $15 in parts and an hour to retrofit onto existing carburetors.

Then I developed fuel savers based on vaporizing fuel, the most practical of which are the HyCO 2A and HyCO 2DT, which often double mileage.

I also built and tested an EXTREME fuel system which achieved over 200 Mpg in a 1973 GMC ½-ton pickup, which you can read about in my book "Extreme Mileage, 101" *http://www.eagle-research.com/cms/store/fuel-savers/extreme-mileage-101*

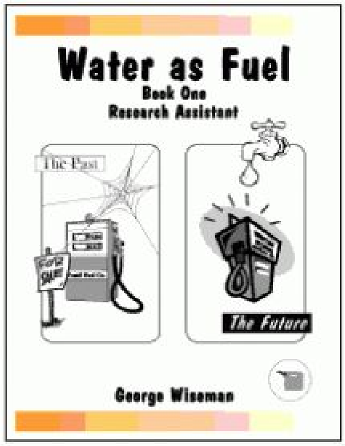

I started researching Water as Fuel technologies in 1989, finding several worth investigating and wrote the book "Water as Fuel, Book 1" in which I outline 13 of the ways water has been used as a fuel or fuel enhancer.

www.eagle-research.com/cms/store/fuel-savers/water-fuel-book-1

I then took two of those Water as Fuel technologies (so far) and wrote books specifically about them. The books being "Water Injection" and "HyZor Technology" (which is an on-board electrolyzer)…

In the meantime Ozzie Freedom independently discovered and researched on-board electrolyzers and wrote a MASSIVE best seller telling people how to build a simple on-board electrolyzer, using mason jars.

Ozzie has now gathered together his book and research (including references to my work) and made it all 100% public domain.

This gesture of altruism was/is NEEDED because Vested Interest has been trying (in various ways) to SQUASH this knowledge.

We need to make sure that anyone can learn:

1. *Professionals (like teachers and mechanics) were taught lies AND were NOT taught what they needed to know to SEE the lies. See http://er4u.info/462 for example*[1]*.*
2. *That vehicle mileage CAN be SIGNIFICANTLY increased, with benefits of power / performance gain, nearly eliminate pollution and much longer engine life. See http://er4u.info/3921 for example.*
3. *WHY high mileage is possible. See http://er4u.info/443 for example.*
4. *HOW to easily and inexpensively increase vehicle mileage with DIY projects. See my books, website, YouTube, etc. for examples.*

You can be assured that vehicle manufacturers will not apply REAL high mileage technology to their automobiles; even though 200 MPG fuel systems have been available for almost 100 years. They (and many other associated companies owned by the same people) make FAR too much money by selling vehicles with inefficient fuel systems based on technology developed in the 1800's.

'Modern' touches like electronic fuel injection, are simply smokescreen, obfuscating the lie by making it 'seem' like they are doing all they can to increase efficiency… When in fact they are doing the MINIMUM, then use propaganda and statistics manipulation to support the lies (the average fuel mileage in America has actually gone DOWN from the 1970's).

Ozzie and myself are passionate about spreading the truth…

The truth can be REALLY scary; that corporations and governments collude to STEAL from us and will do almost anything to prevent that knowledge from becoming public (suppression stories outlined elsewhere).

We appreciate anyone brave enough to wade through the information to learn the TRUTH, apply it to their lives in practical ways and to SHARE it.

For those that do, we thank you and welcome you to REALITY.

May the blessings be,

George Wiseman

Eagle-Research Ltd.

Eagle-Research
Energy Solutions
since 1984

---

[1] The article is now included in Chapter 19.

Foreword by Ozzie Freedom

Hello, my real and only name is Ozzie Freedom and I'm the Founder of **WaterfuelPro** *(WaterfuelPro.com) and* **Water4Gas** *(Water4Gas.com - now a charity operation). Some of my readers think that I've invented Waterfuel… but my duty is just to organize, clarify and reduce complexity in information and technology – in order to make them more useful and accessible to all.*

Are you seeking ways to use water as fuel, to save a bundle while helping the environment? Good! Because I've arrived here for the very same reasons. I started studying Free-Energy back in 1983; now that I'm a bit ahead of some readers, let me show you what I found.

In 2005 I wanted to save gasoline and also was in desperate need of a way to eliminate the terrible smoke out of my old car's engine. The smoke problem was the bigger of two evils as it was harming my health on a daily basis. I found free DIY plans that offered a solution but were too complicated for my low budget. Experiments I've conducted with fuel additives were somewhat successful, but the harsh smells and explosiveness of those chemicals when heated by the Los Angeles sun, still posed a hazard… I kept searching for better solutions.

In 2006 the brothers ***Tom and Bill Lang*** *of www.WaterToGas.com and* ***George Wiseman*** *of www.Eagle-Research.com showed me how to solve both of these problems – economy and pollution – using Waterfuel. For the first time, I found SIMPLE and AFFORDABLE solutions that I could do at home. Naturally, I got excited and self-published my DIY books and DVDs so that many others could follow a well-paved path. Many experimenters joined in and we've been exchanging much knowledge ever since.*

However, I also found out that people all over the world, including opinion leaders and government officials, have been misled by non-scientific voices that insisted: "Waterfuel is a hoax because it's physically impossible!" PEOPLE KEPT ASKING ME FOR "PROOF" – AND THAT'S WHEN I STARTED PIECING THE PUZZLE TOGETHER. It took 8 years of hard work to collect and organize all the scientific data available today, to finally come up with an ORGANIZED body of provable data on Waterfuel. And now you have it in your hands!

The aim of this book is not only to show the scientific validity of Waterfuel for automobiles (colloquially "water hybrids"), but far beyond that – to prove that Waterfuel has many other aspects and uses, each of them backed up by enough science to make your head spin.

USE THIS BOOK TO SHOW OTHERS THAT THERE IS ALL THIS SCIENCE AND COLLECTIVE HUMAN KNOWLEDGE ABOUT WATERFUEL. And most importantly, use it to understand for yourself what Waterfuel really is, and to EDUCATE YOURSELF on how big and wide the subject is. On a deeper level, use it as a textbook for students and reference for further study by engineers, developers and entrepreneurs venturing into the depth and width of this ever-evolving technology called Waterfuel.

Enjoy the ride!

Ozzie

Chapter 1. What is Water? H_2O??? Look What I Found!

Allow me to start this chapter from its ending:

WATER IS NOT H2O!

The purpose of this chapter is ***not*** to prove or disprove Waterfuel. It's here to show you that **there is so more to water than H_2O** – chemically and otherwise. Because this is something that you should be holding in the back of your mind while reading the rest of this book.

The Semantics and The Philosophy of "What is Water?"

"Water" is different things to different people. Even H_2O, the chemical view of water, is different things to different scientists. One thing is certain – there's a significant dichotomy (separation, gap) between these two **groups** of definitions – the very limited chemical view vs. water at large. This seems like "only" semantics and "only" philosophy – but words and terminology are very basic because if we don't know the definitions of these words then what are we even discussing when we say 'Waterfuel'?

However, we'll only touch on it lightly here. For further study read these science publications:

"Water is Not H_2O" – Chapter 18, Philosophy of Chemistry

- Author: Professor Michael Weisberg – University of Pennsylvania, Stanford University
- http://link.springer.com/chapter/10.1007%2F1-4020-3261-7_18

"Science and Everyday Life: Water vs. H_2O"

- Author: Robin Findlay Hendry – Institute of Advanced Study, Durham University, UK
- https://www.dur.ac.uk/resources/ias/insights/Hendry14Feb.pdf

"Is Water H_2O? Evidence, Realism and Pluralism" →

- Author: Hasok Chang – Boston Studies in the Philosophy and History of Science
- http://www.amazon.com/Is-Water-H2O-Pluralism-Philosophy/dp/9400739311

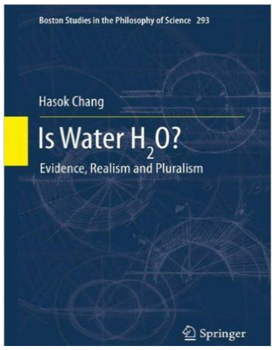
Boston Studies in the Philosophy of Science 293
Hasok Chang
Is Water H_2O?
Evidence, Realism and Pluralism
Springer

Scientists confirm: water is not what "old school" used to think about water… here are some facts

Fact #1: Water Has Memory

"The Hidden Messages in Water" by Dr. Masaru Emoto

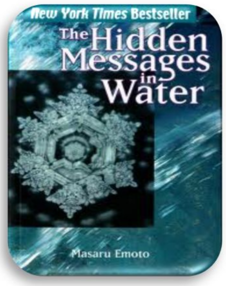

Dr. Masaru Emoto is world-renowned for his experiments into water memory. By freezing water samples immediately after they've been exposed to emotions "transmitted" by his team of researchers and photographing images of sliced frozen samples, Dr. Emoto was able to see a whole world of hidden messages that were recorded in those samples. He wrote several books on the subject but the scientific world scoffed them off as bad science. Order his books from: www.amazon.com/Hidden-Messages-Water-Masaru-Emoto/dp/0743289803

Professor Eshel Ben-Jacob (Tel-Aviv, Israel) invented a scientific method to MEASURE WATER'S MEMORY

Prof. Eshel Ben-Jacob (1952-2015) had impeccable credentials:

✓ Ph.D., Physics, Summa cum laude, Tel Aviv University (Israel)
✓ M.Sc., Physics, Magna cum laude, Tel Aviv University (Israel)
✓ B.Sc., Physics, Tel Aviv University (Israel)
✓ Investigated the Physics of Living Systems:; Biocomplexity; Biological network theory; Social Behaviors of Bacteria; Swarming Intelligence; Network Neuroscience; Neuro-Glia Interactions; Physics of Cancer; The Physics of Cellular decisions; The foundations of cognition; Immune networks; Water complexity; Econophysics.
✓ Prof. of Physics and Astronomy, Tel Aviv University (Israel)
✓ Adjunct Prof. of Biochemistry and Cell Biology and Senior Investigator CTBP, Rice University (Houston, Texas)
✓ Adjunct Prof. of Medical Physics, Assaf Harofeh Medical Center (Israel)
✓ Award: Landau Research Prize, 1986
✓ Award: The Siegle Research Prize of the Israel Academy of Sciences and Humanities, 1996
✓ Award: SciAm 50, 2007
✓ Award: Weizmann Prize in Exact Sciences, 2013 (Israel)

Prof. Ben-Jacob experimented with the "fringe science" claim that water has memory. He found out that no scientific equipment was available that was capable of measuring the minute changes postulated by Dr. Emoto and other experimenters. Instead of giving up on proving (or disproving) these interesting claims, he used his extensive knowledge of **biology** to mirror the effects of water – on **bacteria.** *Clever move!*

Ben-Jacob exposed living bacteria to water samples that had different “experiences” (by way of exposure to electromagnetic fields) but were otherwise CHEMICALLY IDENTICAL and from the very same water source. Bacteria that came in contact with these different water samples showed distinctive and measurable differences in their reaction such as speed of multiplication, health, etc.

At the time of writing Professor Ben-Jacob did not find the exact mechanism by which water held memory, but he proved beyond doubt that the phenomena of water memory is indeed real. ***Ben-Jacob’s discoveries are very important for understanding water at large.*** The diagram below is a small sample from his presentation on the subject:

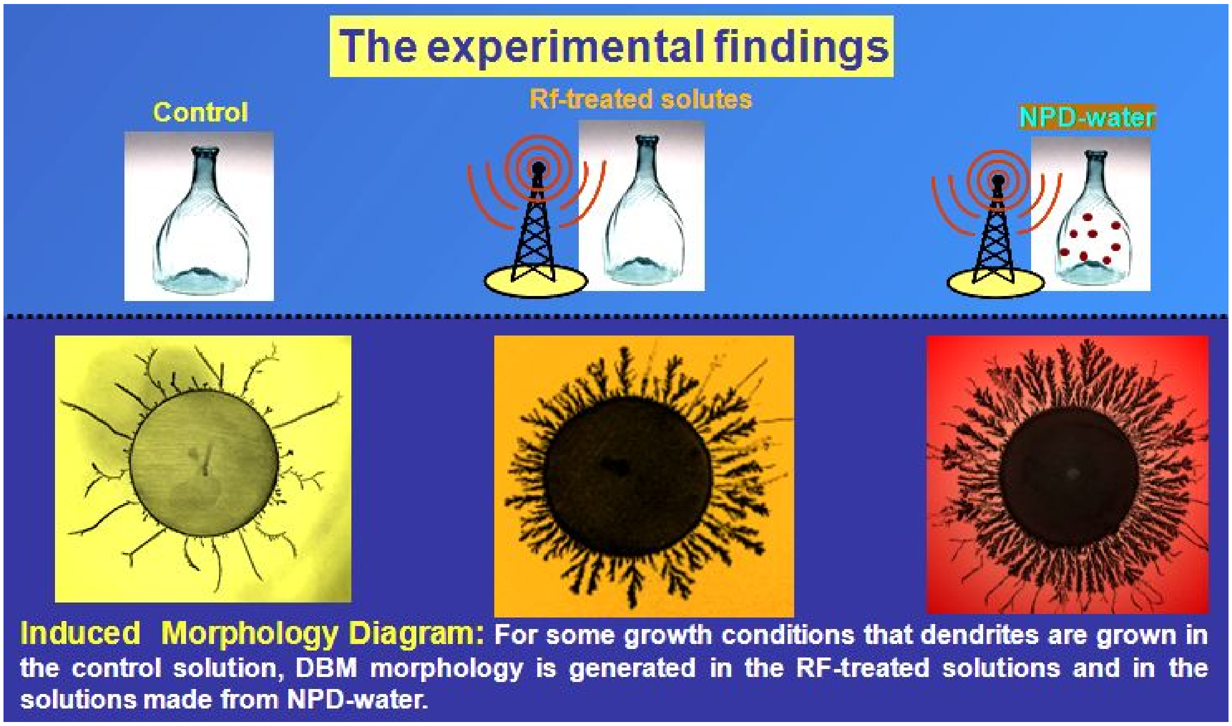

The experimental findings

Induced Morphology Diagram: For some growth conditions that dendrites are grown in the control solution, DBM morphology is generated in the RF-treated solutions and in the solutions made from NPD-water.

References:

- www.grander.com/intl-en/international/water/the-element-water/fun-facts/water-has-a-memory
- Israeli scientists who took part in various sections or stages of Ben-Jacob’s research were: Nadav Raichman, Tamir Gabay, Yael Katsir, Yoash Shapira, Lior Miller, and Yakir Aharonov.
- “The memory of water; an overview” (doi:10.1016/j.homp.2007.05.006) by Prof. Martin Chaplin, B.Sc Ph.D CChem FRSC[2], Emeritus Professor of Applied Science, London South Bank University (UK): www.sciencedirect.com/science/article/pii/S1475491607000653

German Study - Stuttgart University

Professor Bernd Kröplin (bio www.cimne.com/cm-master/Doc/prof/stu/BerndKroplin.pdf) of Stuttgart University conducted many investigations on water unique characteristics

---

[2] Fellow of the Royal Society of Chemistry (UK, USA, Brazil, China, Germany, India and Japan)

(www.weltimtropfen.de/pressestimmen_english.html). Watch him in ***"What We Know Is a Drop"*** by Hans Kronberger; English https://youtu.be/KN3PBFxV3Xw ; German https://youtu.be/oW4LxxIrj9A or with Hebrew subs at https://youtu.be/Y8-PgI5XDic

In reproducible experiments he proved that the SAME water can "record" the different information of flowers, mobile phone, X-rays – or even living persons. This validates Ben-Jacob's and Emoto's findings and adds to them.

Nobel Prize Laureate, Luc Montagnier from France, proves water memory via DNA and Virus imprint on water

Luc Montagnier, a French virologist who had won the Nobel prize for his discovery of HIV, continued the work of Jacques Benveniste after the later dies in 2004. French scientist Fran De Aquino wrote that "*Jacques Benveniste has been the first to propose (1988) that water has memory. The fact that the water contains electric dipoles, which can give to it a significant memory capacity, has been also considered by Brian Josephson and, more recently, by J. Dunning-Davies."*

WATCH: New Water Memory Movie

- This is a 52-minute Documentary about Luc Montagnier
- https://www.youtube.com/watch?v=R8VyUsVOic0
- Directed by Christian Manil and Laurent Lichtenstein, Produced in 2014 by Daniel Leconte
- Apart from the good visualization of Montagnier's experiment with Italian colleagues Professor Vittorio Colantuoni and Professor Giuseppe Vitiello from the University of Sannio in Benevento, Italy, an interest aspect exposed at several points in the movie is not just the skepticism but actual FEAR of fellow scientists to participate in studies that just might discover something totally new, leading to their status in the community being lowered or even crushed (i.e., denied funding).

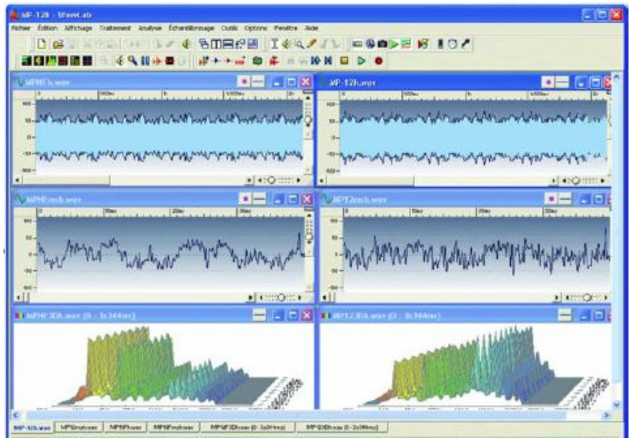

References

- "Luc Montagnier, Nobel Prize Winner, Takes Homeopathy Seriously," by Dana Ullman, originally posted 01/30/11 on the Huffington Post http://www.newlifehomeopathy.com/Luc%20Montagnier.pdf
- "Transmission of DNA Genetic Information into Water by means of Electromagnetic Fields of Extremely-low Frequencies," by Fran De Aquino https://hal.archives-ouvertes.fr/hal-01127694/document

Fact #2: Water Clusters

How does water form clusters – and why is this important?

Water IS different. You know it already. For example, you know that the SOLID state of water, ice, behaves unlike any other solid – it FLOATS above its own substance in its LIQUID state. Why does it do that? And it does other "weird" things, too.

Professor Jill Granger (B.S., Butler University; Ph.D., Purdue University) explains how and why water is different than other substances. Granger uses no more than school-level science to show the chemical reasons why water molecules bond to each other. →

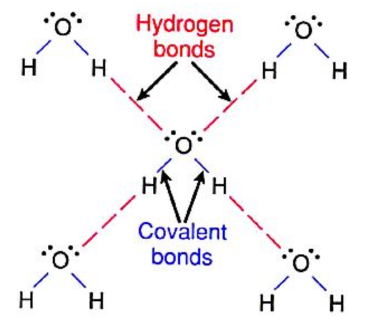

Image: "Chemistry in Context" (1997) Ch.5 "The Wonder of Water"

Such bonding creates ***clusters of water particles***. This implicates on the behavior of water, because now that it has inner STRUCTURE rather than just "H_2O" – the substance as a whole can carry INFORMATION that can be recorded in those structures. This, in my view, joins other evidence that water does **carry information,** or in other words "has memory." STRUCTURE and the ABILITY TO CARRY INFORMATION are two sides of the same coin. And, as Professor Granger wisely explains, '***Structure Means Function***' – http://witcombe.sbc.edu/water/chemistrystructure.html

Martin Chaplin describes the many structures of ice and "ice rules" http://www1.lsbu.ac.uk/water/ice_phases.html The possibilities are mind-boggling. (I've brought here sample images from dozens he provides there with clear explanation of each).

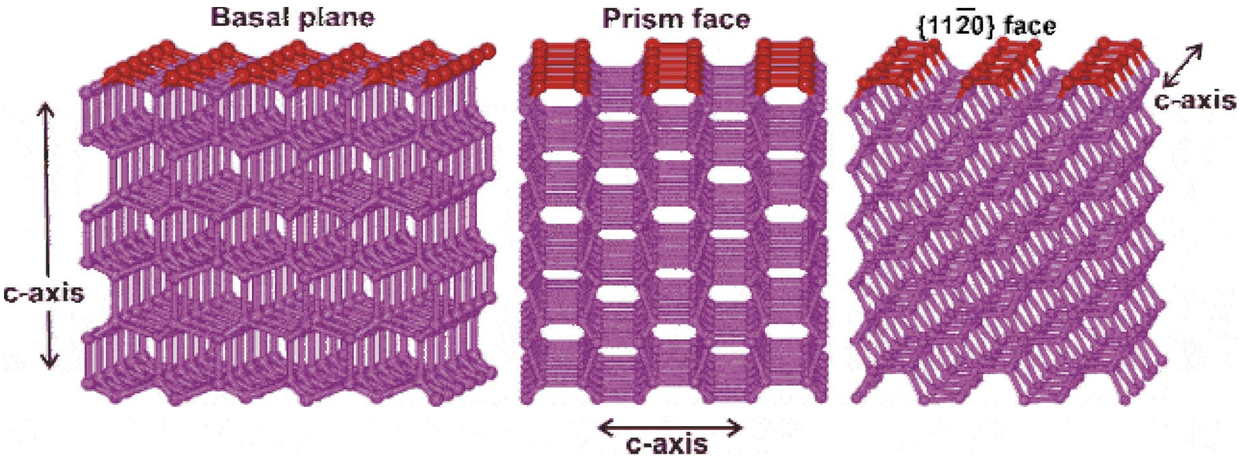

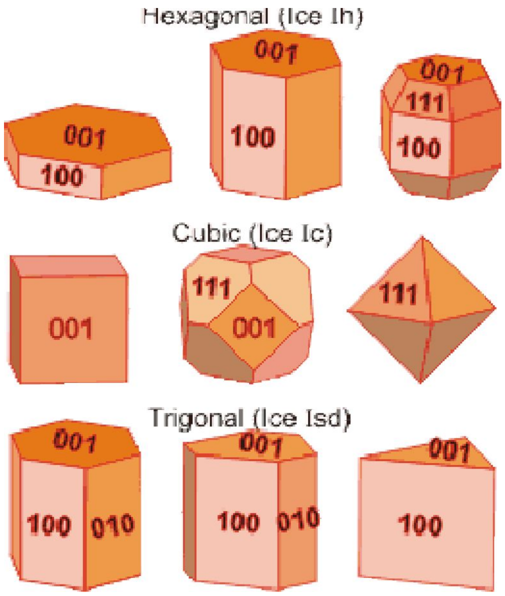

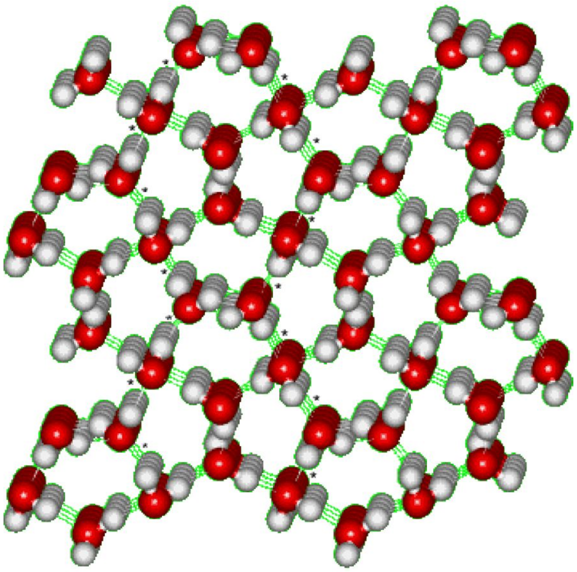

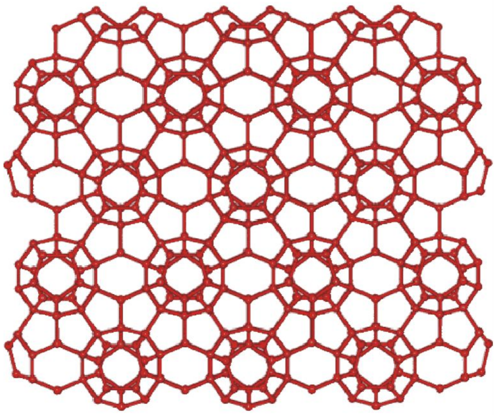

The principal structures of ice (top left) and examples of water clustering (in ice) presented by Martin Chaplin (many more on his website).

The list below has important articles by Prof. Granger:

- The Chemistry of Water - http://witcombe.sbc.edu/water/chemistry.html
- Water is Weird? http://witcombe.sbc.edu/water/chemistryproperties.html
- Hint for Waterfuel - http://witcombe.sbc.edu/water/chemistryelectrolysis.html - an article about electrolysis, where energy is "hidden" inside water – and how to liberate it in energy-efficient ways (hint: catalysts!)

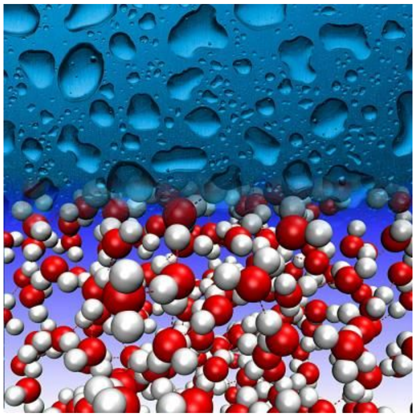

Image: Omololu Akin-Ojo and David Barczak, University of Delaware

More on Water Clustering

- ☐ Science Paper: “Water clusters: Untangling the mysteries of the liquid, one molecule at a time”
- ☐ Authors: Frank N. Keutsch; Richard J. Saykally
- ☐ Published: PNAS* 2001; 98:10533-10540
  *PNAS = Proceedings of the National Academy of Sciences
- ☐ Link: http://www.pnas.org/content/98/19/10533/F6.expansion.html
- ☐ Download: in that page click the button “PowerPoint Slide for Teaching”

ABSTRACT: Two distinct tunneling pathways rearrange the hydrogen bond pattern in the cyclic water trimer. The torsional (flipping) motion (a) of the free hydrogen atoms from one side of the plane determined by the oxygen atoms to the opposing side connects two degenerate minima on the IPS. The barrier for this tunneling motion is lower than the vibrational zero-point energy for $(H_2O)_3$ and close to the vibrational zero-point energy for $(D_2O)_3$ (43, 44, 104).

Inclusion of flipping of all free hydrogens splits each torsional energy level into a manifold of six states. This flipping motion is symmetrically equivalent to rotation around the axis and hence is a pseudorotational motion coupling strongly to the overall rotation of the cluster, which results in severe Coriolis perturbations that can be readily observed in all torsional bands. Development of a detailed Hamiltonian accounting for this coupling was necessary for a complete understanding of the torsional states and analysis of the torsional bands (42).

The bifurcation tunneling motion (b) in the water trimer consists of the exchange of a free and a bound hydrogen together with the flipping motion of the free hydrogens on the two neighboring water monomers. The bifurcation tunneling pathway is the lowest energy hydrogen bond breaking motion observed in water clusters, and, in the trimer, connects eight degenerate minima on the IPS, splitting each rovibrational transition into a quartet with relative intensities determined by the nuclear spin statistics. The barrier for this tunneling motion is about 2 kcal/mol and thus results in much smaller splittings than does the torsional tunneling motion (43, 45).

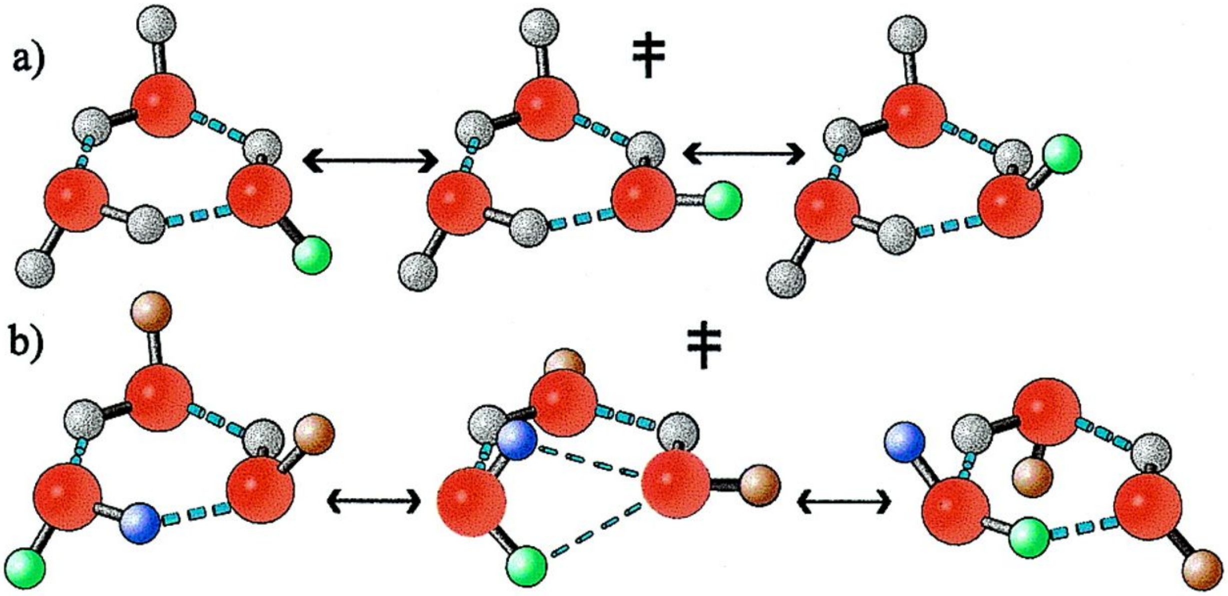

University of Delaware

Interesting discoveries about water clusters were also made by Prof. Krzysztof Szalewicz, physics and astronomy, University of Delaware (USA) and his team of scientists including Robert Bukowski from Cornell University (USA), Gerrit Groenenboom and Ad van der Avoird from the Institute for Molecules and Materials at Radboud University (Netherlands). Downloads:

- www.chemlin.net/news/2007/mar2007/water.htm
- www.eurekalert.org/pub_releases/2007-03/uod-prw030207.php

"Water clusters in life" (University of Southern California)

- Authors: Shui Yin Lo, W.C. Li, S.H. Huang (R&D Department, American Technologies Group, Inc., Monrovia, California; Division of Infectious Diseases, Children's Hospital Los Angeles, Department of Pediatrics, University of Southern California School of Medicine, Los Angeles, California, USA)
- Published: Medical Hypotheses, 07/2000; № 54(6), pages 948-953.

ABSTRACT (highlights by Ozzie): *"The role of water in chemical, biochemical and cellular events has only been recognized as a universal solvent. The conventional wisdom holds that water is a passive agent in biological interaction. However, more and more researchers regard water as an* ***active component*** *in biochemical reactions and hence occupy a crucial role in life.*

> *"We propose that* ***the active component of water is due to the existence of stable water clusters in aqueous solutions.*** *Our research demonstrated that stable water clusters could be produced in very dilute inorganic and organic water solutions, and also isolated from biological fluids such as bovine serum. Stable water clusters may play an important role in physiological and pathological processes of life."*

Source: http://www.researchgate.net/publication/12450588_Water_clusters_in_life

CLUSTERS may be water's most important uniqueness, the one factor that sets it the most apart from "normal" materials.

What's the importance of water clusters?

1. **Structure = stored information,**
2. **Structure → *FUNCTION*.**

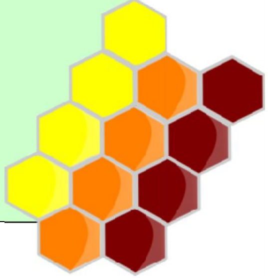

Example of how crucial water clustering may be to the FUNCTIONING of fuels

I may be ahead of the subject, we're not into fossil fuels and Waterfuel yet, but there's this interesting study by German scientists that I must share with you because it shows the importance of WATER STRUCTURE to fuel formulas (which are usually mixes of many ingredients).

- Science Paper: "Water Clusters in Liquid Fuels. Their Role and Surroundings"
- Authors:
  --Kristina Zubow; Viktor Anatolievich Zubow (both from A IST Handels- und Consulting GmbH, dept. R&D, D-17192 Groß Gievitz, Germany)
  --Anatolij Zubow (from the Dept. of Computer Science, Humboldt University Berlin, Germany)
- Published: Physical Chemistry, Vol. 2 No. 1, 2012, pp. 21-26.
- doi: 10.5923/j.pc.20120201.05.
- Link: http://article.sapub.org/10.5923.j.pc.20120201.05.html
- QUOTES:
  "The mixing of different liquids should not lead to the formation of homogeneous systems, the so-called ideal solutions because of cohesive and structural factors, the crucial role of which, unfortunately, is ignored by many researchers. If even simple liquids are considered to be inhomogeneous (long-range order at cluster level), then the mixtures of different miscible liquids even more. On the other hand, we can expect that the heating will lead to the dispersion of the mixture of liquids and the cohesive and structural factors coupled with the positive influence of white noise to the formation of a new long-range order. ***The mixtures are to be understood as nano colloidal systems*** *where the nanoparticles of different liquids are not miscible with each other although a phase boundary cannot be seen with the classical energy-rich methods. However, some simple water clusters (up to hexamers, 3329 cm-1) in neon were already recorded with IR spectroscopy by Hibarayashi and Yamada*[3].

  "Understanding of liquids' states in mixtures will open new fields in nanotechnology, optimize known processes in chemistry (drying, combustion, polymerization), model biological systems, and develop the remote communication of liquids.

  "In this work, we decided to study the long-range order in fuels, as the most promising topics."

---

[3] Shinichi Hirabayashi, Koichi MT Yamada. The monocyclic water hexamer detected in neon matrices by infrared spectroscop. Chem. Phys. Letters 2007;435; 74-8.

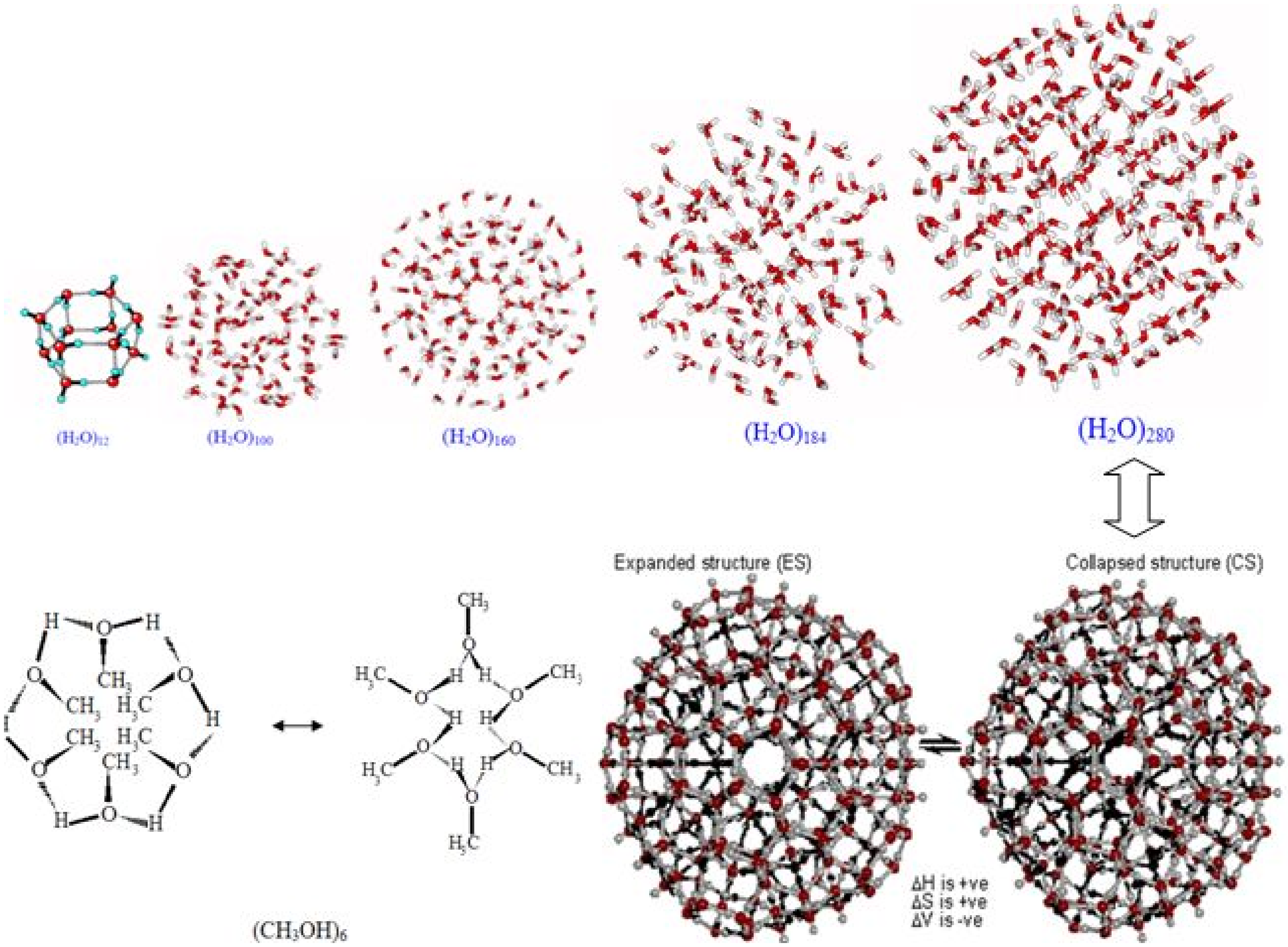

Image: http://article.sapub.org/10.5923.j.pc.20120201.05.htm

ANOTHER QUOTE FROM THIS PAPER:

> ***"The important role of water clusters in hydrocarbon nanoemulsions becomes clear considering the scheme how oxygen interacts with the fuel at the level of: (i) oxidant diffusion into the reductant cluster (fuel), (ii) chemical reaction itself and (iii) products' removing (combustion gases, scheme)."***

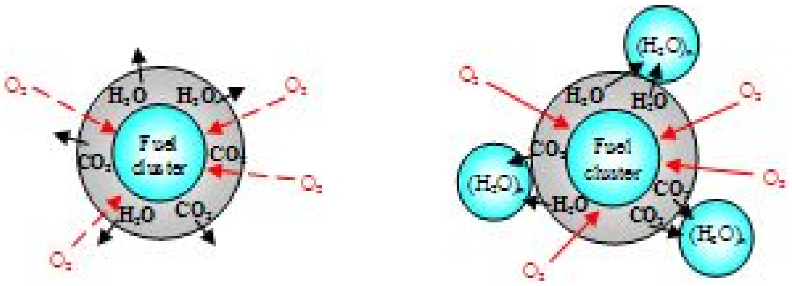

Without water clusture ***With water cluster***

Images: http://article.sapub.org/10.5923.j.pc.20120201.05.htm

D&Y Laboratories brings Water Clusters to Heavy Transportation – Scientifically

From a scientific lab in Missouri comes a bridge between WATER CLUSTERING and the FUNCTIONING OF HYDROCARBON FUELS fully explained, peer reviewed – and even proven in heavy road/marine transportation

David L. Gann (1949-2013), see photo, Founder of D&Y Laboratories http://dandylaboratories.com of Missouri, USA, was responsible for designing and constructing the company's state-of-the-art laboratory, bringing together scientists from numerous fields and coordinating the research that led to the discovery, scientific proof and utilization of Stable Water Clusters.

The work Gunn and his team at D&Y Laboratories reflects not only on human health but also on energy, as their science culminated in the development of the highly efficient fuel additive Eco-Perfect® http://ecoperfect.us

IMPORTANT NOTE: since this is a book on energy, here we focus on the application of Stable Water Clusters to fuel and energy; however, the complete science has been successfully applied to health and other studies. The list of science papers given below can give you a more complete picture on the subject, and more data can be requested from D&Y Laboratories.

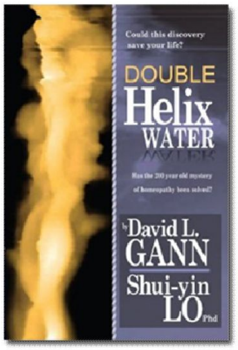

The book titled "Double Helix Water Has the 200-year-old mystery of homeopathy been solved?" authored by David L. Gann and Shui-yin Lo, PhD, is available from Amazon: https://www.amazon.com/Double-200-year-old-mystery-homeopathy-solved/dp/0578042525/ Additionally, commercial products (scientifically proven) relating to health are available from Amazon as well as www.DoubleHelixWater.com and www.LivingClean.com

The COMMERCIAL PRODUCT that applies Water Clusters to Fuel Economy and Healing The Environment

The commercial product Eco-Perfect® includes a series of products for gasoline engines, Diesels and industry (the image shows but one product from that line). The science of this product line is explained at http://ecoperfect.us/eco-perfect-works/

A few recent highlights from users and government:

- Eco Perfect tested by the United States Military: A test run with the U.S. Marine Corp Light Armor Division recorded an 11% to 18% improvement in fuel economy when using Eco-Perfect®.
- Eco-Perfect® customer road/marine tests demonstrate an average fuel savings of up to 25.7%, and up to 85% reduction in harmful emissions: http://ecoperfect.us/eco-perfect/
- Eco-Perfect® has been EPA approved; EPA Registration# 23972001 Eco-Petro-Perfect.

The Science

Listed below are a few of the research papers published on the subject of stable water clusters. At this time of writing, the full versions of these science papers are available for download from the website of D&Y Laboratories:

- Title: "Evidence for the Existence of Stable-Water-Clusters at Room Temperature and Normal Pressure"
  Originally published in Physics Letters A by *Elsevier.*
  Download: http://dandylaboratories.com/wp-content/uploads/2011/09/Double-Helix-Water-Existance-of-Stable-Water-Clusters-257112-1.pdf
- Title: "Survey of I Clusters"
  Originally published in *Physical, Chemical and Biological Properties of Stable Water Clusters*, Proceedings of the First International Symposium.
  Download: http://dandylaboratories.com/wp-content/uploads/2011/09/SURVEY-OF-I-CLUSTERS.pdf
- Title: "Anomalous State of Ice"
  Originally Published in Modern Physics Letters B, Vol. 10, No. 19 (1996), pages 909-919.
  Download: http://dandylaboratories.com/wp-content/uploads/2011/09/ANOMALOUS-STATE-OF-ICE.pdf
- Title: "Atomic Force Microscopy of Adsorbates from I_E Solutions"
  Originally published in *Physical, Chemical and Biological Properties of Stable Water Clusters*, Proceedings of the First International Symposium.
  Download: http://dandylaboratories.com/wp-content/uploads/2011/09/ATOMIC-FORCE-MICROSCOPY-OF-ADSORBATES-FROM-IE-SOLUTIONS.pdf
- Title: "Dielectric Spectral Study in Low Frequency of I_E Water and Some Other Solvents"
  Originally published in *Physical, Chemical and Biological Properties of Stable Water Clusters*, Proceedings of the First International Symposium.
  Download: http://dandylaboratories.com/wp-content/uploads/2011/09/DIELECTRIC-SPECTRAL-STUDY-IN-LOW-FREQUENCY-OF-IE-WATER-AND-SOME-OTHER-SOLVENTS.pdf

- Title: “Effect of I_E Crystal Water on Enzyme Activity”
  Originally published in *Physical, Chemical and Biological Properties of Stable Water Clusters*, Proceedings of the First International Symposium.
  Download: http://dandylaboratories.com/wp-content/uploads/2011/09/EFFECT-OF-IE-CRYSTAL-WATER-ON-ENZYME-ACTIVITY.pdf
- Title: “Effect of I_E Solutions on Enzymes and Microbial Cells”
  Originally published in *Physical, Chemical and Biological Properties of Stable Water Clusters*, Proceedings of the First International Symposium.
  Download: http://dandylaboratories.com/wp-content/uploads/2011/09/EFFECT-OF-IE-SOLUTIONS-ON-ENZYMES-AND-MICROBIAL-CELLS.pdf
- Title: “Experimental Study of Saturated Pool Boiling Heat Transfer of I_E Water”
  Originally published in *Physical, Chemical and Biological Properties of Stable Water Clusters*, Proceedings of the First International Symposium.
  Download: http://dandylaboratories.com/wp-content/uploads/2011/09/EXPERIMENTAL-STUDY-OF-SATURATED-POOL-BOILING-HEAT-TRANSFER-OF-IE-WATER.pdf
- Title: “Inelastic Neutron Scattering Techniques and its Application to I_E Water”
  Originally published in *Physical, Chemical and Biological Properties of Stable Water Clusters*, Proceedings of the First International Symposium.
  Download: http://dandylaboratories.com/wp-content/uploads/2011/09/INELASTIC-NEUTRON-SCATTERING-TECHNIQUES-AND-ITS-APPLICATION-TO-IE-WATER.pdf
- Title: “Possible Mechanisms of Formation and Stability of Anomalous States of Water”.
  Originally published in *Physical, Chemical and Biological Properties of Stable Water Clusters*, Proceedings of the First International Symposium.
  Download: http://dandylaboratories.com/wp-content/uploads/2011/09/POSSIBLE-MECHANISM-OF-FORMATION-AND-STABILITY-OF-ANOMALOUS-STATES-OF-WATER.pdf
- Title: “Suppression of Coke Formation in the Steam Cracking of Alkanes, Ethane and Propane”
  Originally published in *Physical, Chemical and Biological Properties of Stable Water Clusters*, Proceedings of the First International Symposium.
  Download: http://dandylaboratories.com/wp-content/uploads/2011/09/SUPPRESSION-OF-COKE-FORMATION-IN-THE-STEAM-CRACKING-OF-ALKANES-ETHANE-AND-PROPANE.pdf
- Title: “Surface Solution and Liquid Properties of I_E Water”
  Originally published in *Physical, Chemical and Biological Properties of Stable Water Clusters*, Proceedings of the First International Symposium.
  Download: http://dandylaboratories.com/wp-content/uploads/2011/09/SURFACE-SOLUTION-AND-LIQUID-PROPERTIES-OF-IE-WATER.pdf
- Title: “Use of I_E Water for the Mitigation of Calcium Carbonate Scaling”
  Originally published in *Physical, Chemical and Biological Properties of Stable Water Clusters*, Proceedings of the First International Symposium.
  Download: http://dandylaboratories.com/wp-content/uploads/2011/09/USE-OF-IE-WATER-FOR-THE-MITIGATION-OF-CALCIUM-CARBONATE-SCALING.pdf

Fact #3: Water Ignites IN ITS LIQUID STATE

This is definitely not something that "every kid knows" but has recently moved out of the shadows even though it's been known since 1907. Several scientists have shown us how to ignite what we NORMALLY call water – that "simple" everyday liquid… In 2007, while searching for a cure for cancer, *John Kanzius* stumbled upon a way to **burn salt water** with the same radio wave machine he was using to kill cancer cells. This effect was validated by legendary materials scientist *Rustum Roy* (1924–2010) of Penn State University, USA. Kanzius died in 2009 before completing his work, but millions have been inspired seeing him ignite salt water on TV and YouTube. Find his 2009 Patent with Rustum Roy at: http://rexresearch.com/kanzius/kanzius.htm#mxpatent Also worth noticing is Viktor Schauberger's method to burn liquid water, see Chapter 31.

Dr. Peter Graneau[4] reported that when high electric voltage stored in a capacitor is applied to a thin filament (fine spray) of water, a cold explosion of water takes place – while the kinetic energy it releases is far beyond the electrical energy being used to create the arc. Graneau attributes this to the liberation of molecular bonding energy of water. Find many studies (some over 100 years old!) and experimental setups in Chapter 16.

Mixing water in petrol is a known scam that one may encounter at shady gas stations. However, EMULSIFIED WATERFUELS are something else entirely. Dr. Uyehara[5] presented a technical paper which claims that the mixture (by a high-speed emulsifier) of ionized water and fuel oil (with a ratio of 52% and 48%, respectively) can be burned without air and its thermal efficiency is 230% that of air/fuel system for the same combustor-heat transfer layout. He stated that the actual mechanism of this combustion was not clear at the time of publication. Source: O.A. Uyehara, et al., "Fuel Oil Combustion with Water Only for NO_x Suppression and Improved Energy Recovery" presented at the *Diesel Engine Emission Reduction Workshop* at the University of California, San Diego, June 25, 1995.

This principle is also described in great detail in US Patent № 6012915 and presented in Chapter 20 and Chapter 24. Various references are made in this book to such emulsified fuels. But an interesting fact about this specific Patent is that it mentions Brown's gas – a product of water or more correctly a NEW FORM OF WATER – as ***the ideal igniter*** for any water/fossil fuel emulsion. Isn't that interesting?

---

[4] To give full credit, the research mentioned here has been conducted by four scientists: ***Peter Graneau, Neal Graneau, George Hathaway, and Richard Hull.***

[5] The corresponding US Patent was granted in 2000 to Japanese inventors ***Masahiro Mori and Toshiyasu Satoh*** from Zenshin Electric Power Engineering Company, Ltd.

Fact #4: Earth's Water Origin is From Within?!

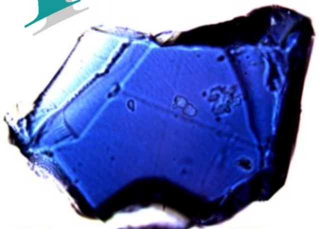

Ringwoodite

Professor Steve Jacobsen of the Department of Earth and Planetary Sciences, Northwestern University in Evanston, Illinois, USA, discovered a reservoir of water three times the volume of all the oceans – and it's located 410-660 km (the "Transition Zone") beneath the surface of Earth. What's more, the water is hidden INSIDE the rocks – ringwoodite in particular – contained in them much like water is held inside your household sponge (but under high pressure). Jacobsen says about his findings: "It's good evidence the Earth's water came from within." The hidden reservoir may also offer an explanation why the oceans stayed the same size for millions of years.

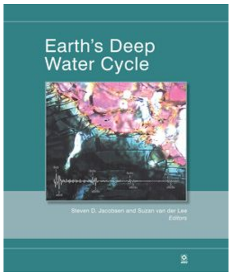

In the book "Earth's Deep Water Cycle", Jacobsen and Suzan van der Lee say that minerals within the Earth's interior could contain THE MAJORITY OF OUR PLANET'S WATER and acted to control surface waters over geologic time. Find his science publications at www.earth.northwestern.edu/research/jacobsen/pubs.html
Also watch his interview with Hari Sreenivasan on BPS:
https://youtu.be/AnDUPEPM0EY The journal of science 'Nature' (Vol.507, pages 221-224) carried an article "Hydrous mantle transition zone indicated by ringwoodite included within diamond" (Graham Pearson, University of Alberta, Canada, et al.) says that *the ultimate origin of water in the Earth's hydrosphere is in the deep Earth*: www.nature.com/nature/journal/v507/n7491/full/nature13080.html Recent publications in 'Science' http://dx.doi.org/10.1126/science.1253358 and 'New Scientist' (Andy Coghlan, 12 June 2014) support both Jacobsen's and Pearson's findings.

While some geologists still believe that water arrived with comets, the huge reservoir discovered by these scientists offers an alternative idea: the oceans were squeezed out of the Earth's interior! Even though NASA has another explanation, they now admit that (quoting www.NASA.gov) *"Earth's water probably didn't come from comets".*

How is this water fact related to Waterfuel? First, it is just another "anomaly" and another previously-unknown fact about water. Secondly, this fact is another piece of the water puzzle that science investigators may find useful. Consider this: does water's ability to squeeze in and out of rocks UNDER HIGH PRESSURE have to do with its energy role?

The fact that water can squeeze in and out of ringwoodite (previous page) may have something to do with its ability to climb 400 ft on its own…

Fact #5: Water Can Pump Itself Up-Up-Up

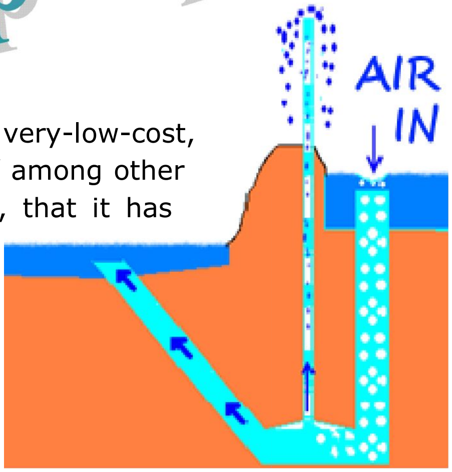

Now this surely relates to energy. There's a simple and very-low-cost, very-low-maintenance pipe system called "Pulser Pumps" among other names. The multiplicity of names suggests, right there, that it has been investigated and used by many people. It is described in greater detail in Chapter 31.

Installed near a stream, the Pulser Pump can pump water to a height *above the level of the stream* – without any "machine" (absolutely no moving parts, no electricity, no fuel, no solar, no wind) – and definitely without any energy invested other than the ability of the water to "pump itself" upwards. Between its many uses, it allows streams in difficult-to-reach locations to be easily accessed, or water from a stream to be piped to a different location, for irrigation or drinking purposes.

Additionally, water literally pumps itself through trees to an immense height of up to 121 meters (~400 ft) when we include the roots' depth, and that's impossible to explain with pumping "by evaporation" because that would only work for 10 meters (33 ft) at best – IF the tree had a VERY powerful pump at its top leaves, which it does not have. There's an explanation alright, but it relies on the ability of water to climb up tiny capillaries inside the tree. Another perplexing fact is that water goes up the tree NOT to feed the tree; this is evident by the vast majority of water – no less than 95% – going right THROUGH the tree into the atmosphere. It can be postulated that this is nature's way to "pull water" up into the atmosphere at all times, even when weather conditions don't allow for much natural evaporation.

← Photo: Certain Eucalyptus trees grow to 100m above ground, with roots as deep as 18m. Some Sequoia are even taller (over 115m) with 6m roots.

These anti-gravity motion of water serve nature in a big way, and life on Earth wouldn't be the same without these "services" by water to nature (with trees' help of course). It also serves in blood motion against gravity.

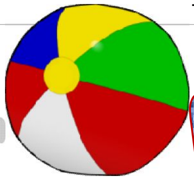

Fact #6: Water "Playful"?

Or is there a serious, natural answer?

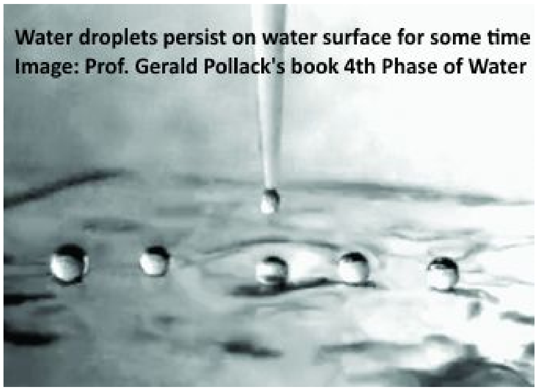

Water droplets persist on water surface for some time
Image: Prof. Gerald Pollack's book 4th Phase of Water

(1) Why would LIQUID water be floating on its own kind?

Prof. Gerald Pollack says in his book "The Fourth Phase of Water" that water droplets often float on the water surface for up to tens of seconds. Even more paradoxically, droplets don't dissolve as single unitary events; they dissolve in a succession of squirts into the pool beneath, in what seems like a programmed dance. Chemistry with its "merely H_2O" is out of boundary here…

(2) Why would water "prefer" round, wiggly motion?

Leonardo da Vinci and Schauberger (Chapter 31) observed it long ago. Google for 'winding rivers' images and you'll see how rivers all over the planet wiggle around in well-rounded winding motions. This typical motion in nature cannot be explained by a specific topographic anomaly or "just H_2O". The explanation (Chapter 31 references) is water reviving itself by twirling clockwise and counter clockwise alternatively. I believe that droplets "dance" over liquid water for a similar reason.

A cross section of Schauberger's pipe invention is shown in the upper diagram, while the diagram below shows how a river wiggles around the bends of a river, turbulating CW and then CCW, changing its electrical charge.

Back to the pipe invention, the action of the torroidal vortex (middle, in blue) concentrates pathogenic bacteria near the pipe's wall (red zone), where they are destroyed by a positively-charged oxygen concentration created by the vortex.

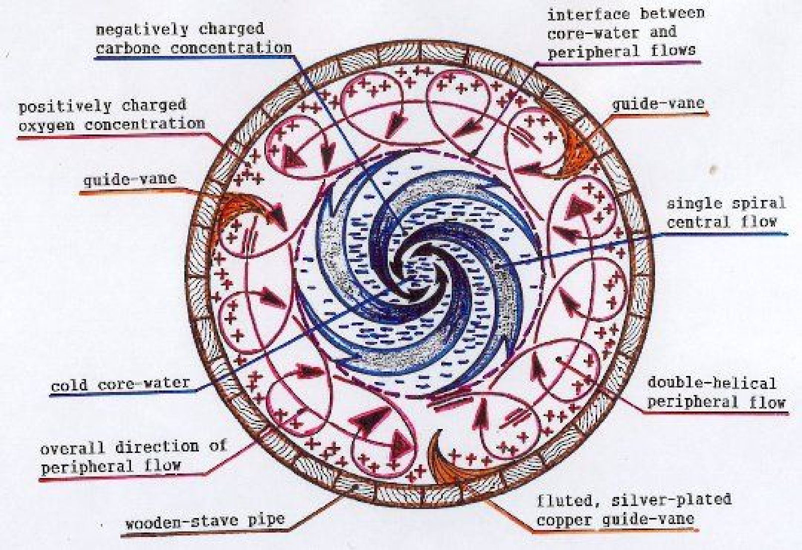

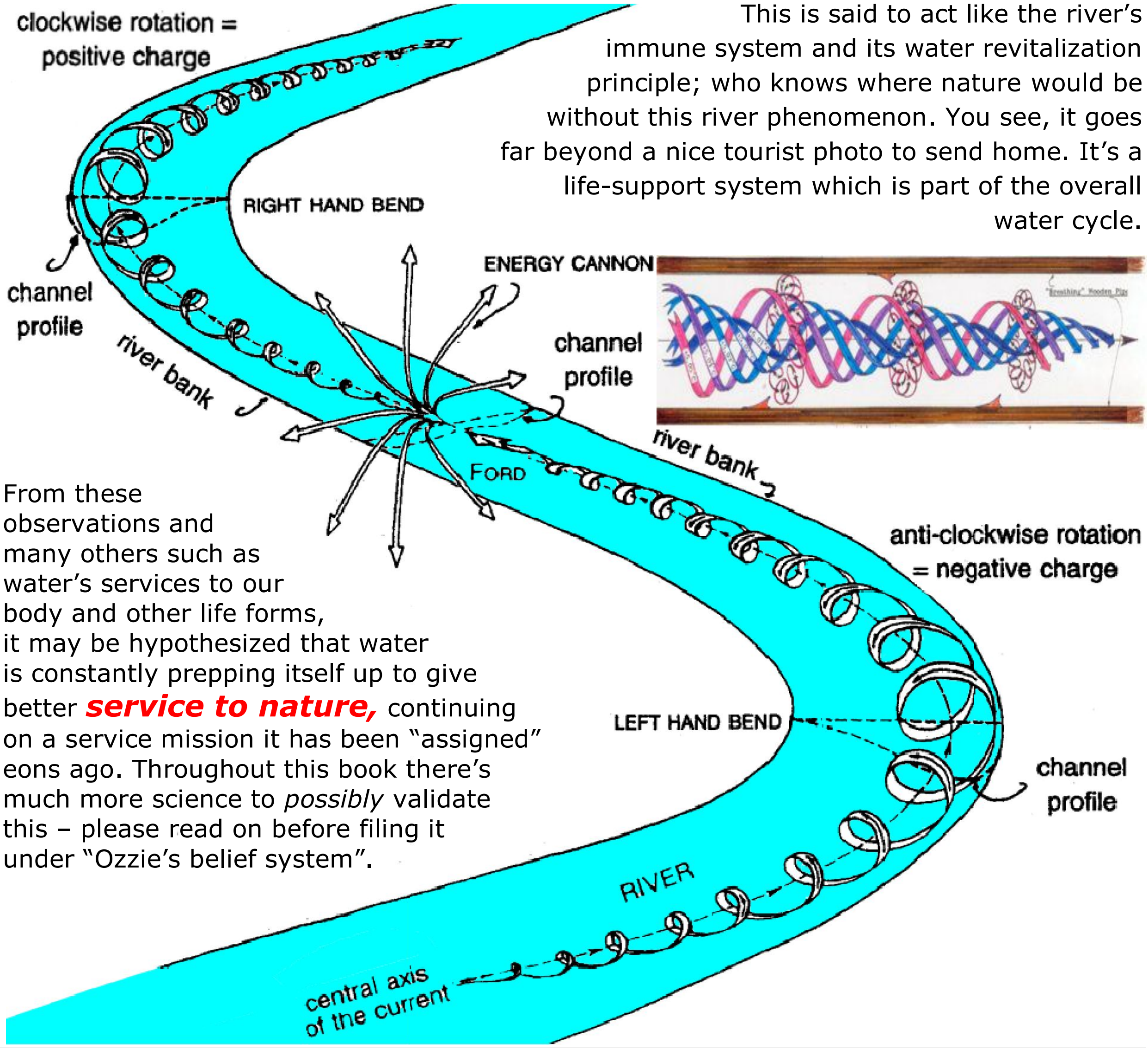

This is said to act like the river's immune system and its water revitalization principle; who knows where nature would be without this river phenomenon. You see, it goes far beyond a nice tourist photo to send home. It's a life-support system which is part of the overall water cycle.

From these observations and many others such as water's services to our body and other life forms, it may be hypothesized that water is constantly prepping itself up to give better ***service to nature,*** continuing on a service mission it has been "assigned" eons ago. Throughout this book there's much more science to *possibly* validate this – please read on before filing it under "Ozzie's belief system".

Fact #7: Multiple Anomalies

Old-school science has been teaching us that water – or "hydrogen oxide" (H_2O) in its chemical definition – is very, very finite. But now scientists from around the world are finding that water is far from simple and has been shown to do a great many strange things. For example, water (when compared to similar molecules e.g. H_2S and NH_3) should be a gas at room temperature, but it's not, and it's the "stickiness" of water molecules that holds them together. They just "love to be together" which leads to the study below.

"Weird H_2O – Science Catches Water Doing Some Bizarre Things"

ARTICLE EXCERPT: Harvard physicists found that specially treated diamond coatings can keep hot water in a frozen state*. The researchers say the finding may be useful in certain medical implants, although others argue that diamonds might cause blood clots. In either case, the big news here is that diamonds can make water solid. Doctoral student Alexander Wissner-Gross, Physics Professor Efthimios Kaxiras, and Professor of Applied Physics Gordon McKay, found that even a very thin layer of diamond coated with sodium atoms will keep warm water in a solid state up to 108°F (42°C).

* http://news.harvard.edu/gazette/story/2007/09/%E2%80%98hot%E2%80%99-ice-could-lead-to-medical-device/

Image: Elmar C. Fuchs, et al.

As if that wasn't weird enough, researchers from the University of Technology in Austria recently discovered that ***when exposed to a high-voltage electric field, water in two beakers will climbs out and cross empty space to join, forming a water bridge that appears to defy gravity*** (http://physorg.com/news110191847.html) Read the full article: www.dailygalaxy.com/my_weblog/2010/06/weird-h2oscience-catches-water-doing-some-bizarre-things.html

Science paper: "When is H_2O not water?"

- ☐ Authors:
  - Chris J. Pickard – Scottish Universities Physics Alliance, School of Physics and Astronomy, University of St. Andrews, United Kingdom
  - R. J. Needs – Theory of Condensed Matter Group, Cavendish Laboratory, Cambridge, United Kingdom
- ☐ Published: 28 December, 2007

EXCERPT: *"H_2O is of vital importance in terrestrial biology and astrobiology and of deep significance to the physical processes which occur in many planets. H_2O occurs in a wide range of environments from the mild conditions on the Earth's surface to the high pressures and temperatures within the thick slushy ice layers of Uranus and Neptune. The phase diagram of H_2O at low temperatures and moderate pressures is very complicated, containing at least 15 ordered phases of water molecules as well as several disordered phases.*

"However, despite enormous efforts, our understanding of H_2O is far from complete. *Rather little is known about the behavior of H_2O under extreme conditions, although it is of importance to planetary geophysics and various laboratory experiments. Water molecules may break apart and form other species under extreme conditions."*

Source: http://scitation.aip.org/content/aip/journal/jcp/127/24/10.1063/1.2812268

Science paper: "Why Water Is Not H_2O, and Other Critiques of Essentialist Ontology from the Philosophy of Chemistry"

- Author: Professor Holly Vande Wall – University of Notre Dame (Indiana, USA)
- Published in Philosophy of Science Vol. 74, № 5 (2007), pages 906-919
- Links: http://philpapers.org/rec/VANWWI and http://branemrys.blogspot.co.il/2011/10/water-is-not-h2o.html

EXCERPTS: *"**An individual molecule of H_2O doesn't have any of the observable properties we associate with water**. A glass of water,* ***pure*** *as water can be, is better understood as* ***containing H_2O, OH-, H_3O+ and other related but less common ions, and even this is a vast oversimplification*** *(if we could get truly pure water, which we cannot). Our current best understanding of the electron transfers that give water the properties we observe is a statistical average of ever changing interactions so complex as to be quite literally unthinkable. Indeed, the problem is* ***"not that we are unsure which (distribution of types of) microstructure is the correct one. The point is that there is no one correct microstructure, because the microstructure depends as much on the context and functions just as another nominal essence would."*** *(van Brakel, 2000b, 80–81).*

"This is why chemists use the 'mixture of ions' model to describe water's macroscopic behavior. The only thing we can say about a glass of water that is not, strictly speaking, an error is that the average ratio of atoms in the glass is 2 H: 1 O and that it has the macroscopic properties of water. If there are other kinds of atoms in the glass, or if the ratio is other than 2:1, then we do not have pure water. If the ratio is but it does not have the macroscopic properties (pH, boiling point, etc.) of water then we have not water but a mixture of hydrogen and oxygen molecules in their elemental form. Chemical analysis and experiment deals with water not as an individuated molecule but in macroscopic quantities. ***All the typical observable properties of water — its pH, its density, its boiling and freezing points, its utility as a solvent, are dependent not upon its atomic ratio but the interactions between the dissociated ions.*** *Philosophers of chemistry have been arguing this point for at least 25 years."*

Source: http://branemrys.blogspot.com/2011/10/water-is-not-h2o.html
More: http://www3.nd.edu/~hps/Vande%20Wall-Chemistry.doc

Gas-From-Water Anomalies

Brown's Gas is discussed in much greater detail later in this book, and this here is just a little focal point on its anomalies, as it relates to WATER itself.

According to George Wiseman of Eagle Research, Canada, Brown's gas is a mixture of mono-atomic[6] and di-atomic hydrogen and oxygen gases, with other constituents detailed in Chapter 5 below, which is produced directly and **FRESHLY** from regular liquid water.

Brown's gas is generated by specific type(s) of electrolysis of water, and has peculiar characteristics as they relate to water:

1) Brown's gas can be ignited but it is ***implosive, not explosive***. When water is electrolyzed it expands by a factor of 1860 volume-wise, and when ignited it reverts back to water thus shrinking to its original size – creating a powerful implosion – from gas ***back to water***.

2) Brown's gas does not boil water – but can melt such a high heat resistance material as tungsten, even though its own burning temperature is only 130°C. This seems to imply that it reacts differently to water as it is just a temporary form of water, not "hydrogen" as many call it by mistake. It IS water but in a different state.

3) Andrew Michrowski, President of *Planetary Association for Clean Energy, Inc.,* says that when the Brown's Gas produced from 1 liter of water is ignited, its volume is REDUCED TO THE ORIGINAL ONE LITER OF WATER. Other scientists state similar ratios even if not 100%. It stands to reason, then, that Brown's Gas does not really "ignite" or "burn" in the normal sense of combustion; rather, it only changes states.

> ***Now that I think of it, what is "anomaly?" Is it anything beyond our schooling – even when we observe it to actually happen? Maybe after you work and experiment with any of these factors for a while you start to see it as less of an "anomaly" and more of a normal fact, one that does not "break the rules of nature"? Do you see it? We'll touch on that again shortly.***
> ***(~Ozzie)***

Sonoluminescence, Cavitation

First discovered in 1933, Sonoluminescence is the phenomenon of light emission by sound-generated gas bubbles in fluids such as ***degassed*** water. The frequency of the emitted light indicates that the temperature at the center of each bubble reaches nearly 20,000°C (35,000°F). Is this HOT? Well, 3½ times hotter than the surface of the sun…

So far various theories have been offered to try and explain this phenomenon, but it is well-known by observation nonetheless. Sonoluminescence relates somewhat to water cavitation phenomena discussed in Chapter 16 as a **practical** source of energy.

---

[6] Singular atoms not paired up, opposed to "di-atomic" (paired up) hydrogen or di-atomic oxygen.

"Normal" raindrops that fall X10 faster than they should…

Rain looks simple enough when you look out the window. Water falls down, follows the rules of air dynamics and water dynamics and gravity and that's about it. Well, a group of serious scientists have put it all under the looking glass of science, and found that rain, plain old rain, is a "mischievous" phenomenon that doesn't fully obey the rules…

In a science paper titled "Do all raindrops fall at terminal speed?", scientists Guillermo Montero-Martínez, Alexander Kostinski, Raymond Shaw and Fernando García published their findings: with laser trackers and advanced video technology they have accurately measured the falling velocity of 1.5 million raindrops in six storms and discovered that a large portion of those (30-60% of appropriately sized drops) "move too quickly" through the air. And we're not talking a mere 10-15% faster, which could be considered measurement error. We're talking 10 times faster, inexplicable by known forces of nature. As Stephen Luntz puts it, "try explaining doing 600 in a 60 zone to the police"
http://www.iflscience.com/raindrops-keep-falling-faster-they-should

This water anomaly was made known in 2009 and since then was re-published by many science outlets, with explanation attempts running wild. Get the complete original science paper from Wiley Online Library:
http://onlinelibrary.wiley.com/doi/10.1029/2008GL037111/full

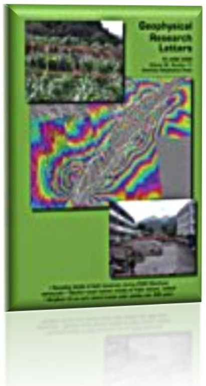

Anomalous Nuclear Quantum Effects in Ice

- Authors: B. Pamuk, J. M. Soler, R. Ramírez, C. P. Herrero, P. W. Stephens, P. B. Allen, and M.-V. Fernández-Serra.
- Published: 9 May 2012, Dept of Physics & Astronomy, Stony Brook University (USA)
- Links: http://journals.aps.org/prl/abstract/10.1103/PhysRevLett.108.193003
  and http://www.sciencedaily.com/releases/2012/05/120509105210.htm

ABSTRACT: "One striking anomaly of water ice has been largely neglected and never explained. Replacing hydrogen (H_1) by deuterium (H_2) causes ice to expand, whereas the normal isotope effect is volume contraction with increased mass. Furthermore, the anomaly increases with temperature T, even though a normal isotope shift should decrease with T and vanish when T is high enough to use classical nuclear motions. In this study, we show that these effects are very well described by *ab initio*[7] density-functional theory. Our theoretical modeling explains these anomalies, and allows us to predict and to experimentally confirm a counter effect, namely, that replacement of O_{16} by O_{18} causes a normal lattice contraction."

---

[7] (Latin): from the beginning, from scratch.

DNA "telepathic"??? -- Or is it something else at play?

- ☐ Science paper: "'DNA Double Helices Recognize Mutual Sequence Homology in a Protein Free Environment"
- ☐ Authors: Geoff S. Baldwin, Nicholas J. Brooks, Rebecca E. Robson, Aaron Wynveen, Arach Goldar, Sergey Leikin, John M. Seddon, Alexei A. Kornyshev.
- ☐ Study by: Imperial College London and National Institute of Health (NIH), USA.
- ☐ Published 23 January 2008 in Journal of Physical Chemistry B.
- ☐ Links: http://philpapers.org/rec/VANWWI and http://branemrys.blogspot.co.il/2011/10/water-is-not-h2o.html

This discovery has been described as the "bizarre" ability of genes (DNA) to recognize similarities in each other ***FROM A DISTANCE, without any proteins or other biological molecules aiding the process.*** According to known science, DNA should not be able to do this. But go ahead and read the details. The "telepathic" communication happened at a distance (well, 1 nanometer…) with neither the aid of proteins nor any other biological molecules. However, this whole phenomenon was observed IN WATER. From the discoveries of Professor Eshel Ben-Jacob and others, we already know that water can transfer information between one DNA (=information pack #1) and the other DNA (=information pack #2). Well, then, does this phenomenon seem "bizarre" any longer? Nevertheless, this is an excellent study that adds to our scientific exploration adventure.

Data from NASA Earth Observatory

While explaining the water cycle on the planet, NASA scientists explain that water is the only common substance that can exist naturally as a gas, liquid, or solid at the relatively small range of temperatures and pressures found on the Earth's surface. Sometimes, all three states are even present in the same time and place, such as a wintertime eruption of a geyser in Yellowstone National Park. http://pmm.nasa.gov/education/articles/earth-observatory-water-cycle-overview

"Lord Kelvin's Thunderstorm"

Also called Kelvin Water Dropper, it's a device invented by British scientist William Thomson (Lord Kelvin) in 1867, which generates – from small water flows – very high voltages as well as other bizarre phenomena that you must see to appreciate:

- https://youtu.be/Cr1w2nTfWYY (Prof. Walter Lewin, MIT)
- https://youtu.be/wfue_iCu0gE (Matthew Gryczan)
- https://youtu.be/8OuonluJPw8 (Thomas Kim)

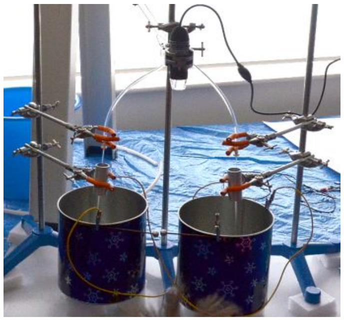

Photo: Cambridge Science Fair 2014

Strangely, it seems that nobody has found use for this device or phenomena other than class demonstrations.

Heavy Water Anomalies – from a science paper titled "Unusual Phase Behavior of Confined Heavy Water"

Heavy water contains heavier hydrogen atoms (containing more than one proton) although their electronic configuration is the same as regular water. Such water displays its own anomalous behavior under certain conditions, and an interesting paper was published in 2010 about it by several scientists from MIT, NIST, University of Maryland, Oak Ridge National Laboratory and National Taiwan University: Yang Zhang , Antonio Faraone, William A. Kamitakahara, Kao-Hsiang Liu, Chung-Yuan Mou, Juscelino B. Leão, Sung Chang, and Sow-Hsin Chen. The paper can be downloaded from https://arxiv.org/ftp/arxiv/papers/1005/1005.5387.pdf

> ***Many of the anomalous properties of water are amplified in the deeply supercooled region. Here we present neutron scattering measurements of the density of heavy water confined in a nanoporous silica matrix MCM-41-S (≈15 Å pore diameter), namely, the equation of state $\rho(T,P)$, in a temperature-pressure range, from 300 K to 130 K and from 1 bar to 2900 bar, where bulk water will crystalize.***

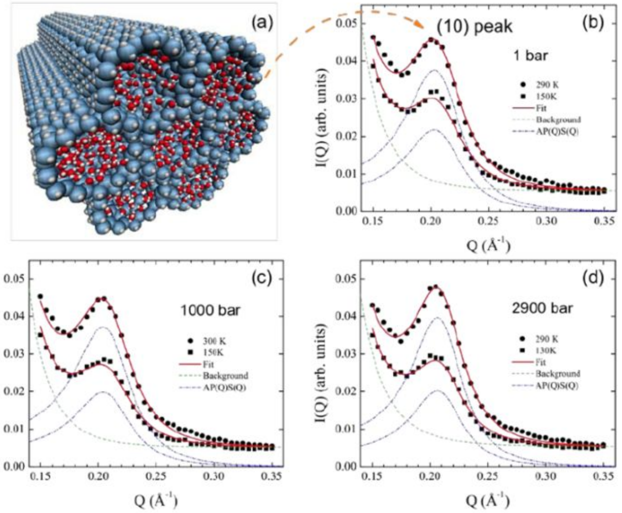

> ***A sudden change of slope in the otherwise continuous density profile (a "kink") is observed below a certain pressure P_c; however, this feature is absent above P_c.***
>
> ***Instead, a hysteresis phenomenon in the density profiles between the warming and cooling scans becomes prominent above P_c. Hence, the data can be interpreted as a line of apparent 2nd-order phase transition at low pressures evolving into a line of 1st -order phase transition at high pressures. If so, the existence of a "tricritical point" at $P_c \approx 1500$ bar, $T_c \approx 210$ K becomes another possible scenario to explain the exceptionally rich phase behavior of low-temperature confined water.***
>
> ***These findings give a unified framework for understanding the properties of confined water. The density data are the main results of the present paper and will be useful for a better modelling of the properties of water in various biological and geological conditions i) in rocks and clays, relevant for mining purposes and environmental questions; ii) on the surface of proteins and membranes, relevant to address at molecular level a number of biological processes; iii) in different artificial porous environments used for catalytic purposes.***

- Another interesting paper is titled "Anomalous Heat Capacities of Supercooled Water and Heavy Water" – published by C.A. Angell and J.C. Tucker of the Department of Chemistry, Purdue University, West Lafayette, Indiana (USA).
- Published in: Science Magazine, July 27, 1973 (Vol. 181, Issue 4097, pp. 342-344)
- DOI: 10.1126/science.181.4097.342, http://science.sciencemag.org/content/181/4097/342

In 2016 an international team of scientists aroused worldwide interest when they published their discovery that LIQUID water has TWO phases that change in the temperature range 50 ± 10°C

- Title: "On the existence of two states in liquid water: impact on biological and nanoscopic systems"
- Authors: L.M. Maestro; M.I. Marqués; E. Camarillo; D. Jaque; J. García Solé; J.A. Gonzalo; F. Jaque; Juan C. Del Valle; F. Mallamace; H.E. Stanley.
- Published: International Journal of Nanotechnology (IJNT), Vol. 13, No. 8/9, 2016
- Abstract: This work reviews several properties of liquid water, including the dielectric constant and the proton-spin lattice relaxation, and draws attention to a bilinear behaviour defining a crossover in the temperature range 50 ± 10°C between two possible states in liquid water. The existence of these two states in liquid water plays an important role in nanometric and biological systems.
- Download: http://www.inderscience.com/offer.php?id=79670

TWO phases???
How about FOUR phases proven scientifically?

"Fourth Phase" and "Fourth State" Water Anomalies

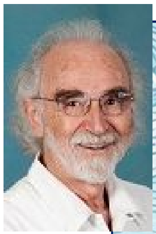

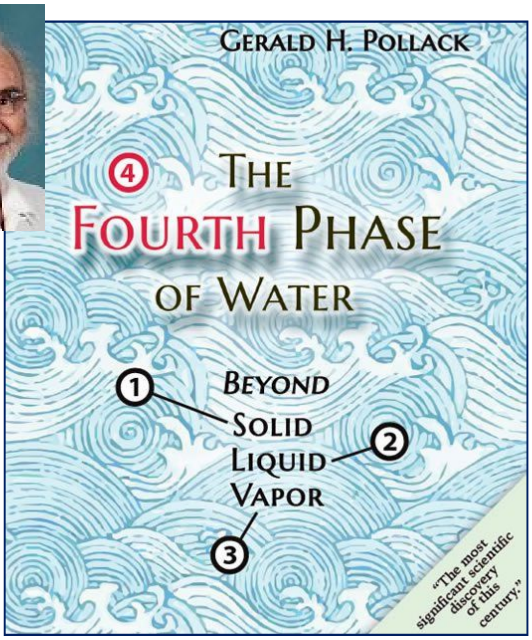

A research by Oliver Beckstein and Mark Sansom (doi:10.1073/pnas.1136844100) showed a fourth state of water (they described liquid–vapor oscillations), in Chapter 14 you'll find George Wiseman's proof of a fourth state of water and now we have Gerald H. Pollack (author of the book "The Fourth Phase of Water" shown here). → All these works confirm the little-known but PROVEN fact that a fourth state-of-matter exists in water, and that it doesn't just exist but *HAS USEFUL CAPABILITIES THAT CAN BE USED FOR ENERGY PURPOSES AND OTHER APPLICATIONS.*

This characteristic of water is one of its main anomalies if not THE anomaly for the purpose of this book, as it relates to extracting energy out of water. Pollack's book is an excellent read due to his extraordinary ability to bring it into closer view without diving into heavy math and he describes many experiments that students and enthusiasts can perform at home/class.

A sneak peek into the book: The main premise of Pollack's book is that water has four phases. ***EZ** means the **Exclusion Zone;*** neither liquid nor solid, it's perhaps best described as a liquid crystal. It stores energy in two modes: order – and charge separation. ORDER constitutes configurational potential energy, deliverable as the order gives way to disorder. The CHARGE SEPARATION means that EZ's potential energy can drive practical devices such as a water purifier (a simple and effective prototype has been demonstrated, and its principle explained in the book). The potential energy associated with water's fourth phase can be exploited in other ways: the sun's electromagnetic energy builds potential energy in water and Pollack describes how this energy, too, can be extracted. Fascinating book!

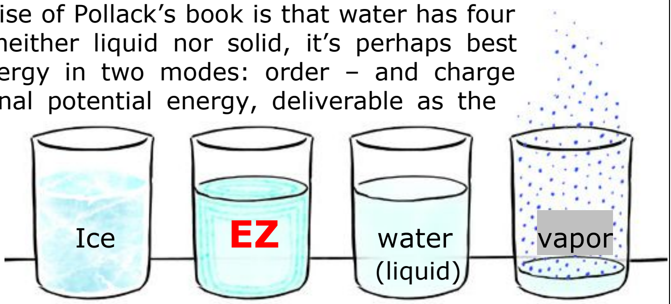

One interesting datum from Dr. Pollack: our human body – by molecule count rather than weight – is 99% water! Isn't it a natural wonder how this "water bag" of ours even holds itself together?

The list goes on…HOW MANY MORE anomalies??!

The Royal Society of Chemistry is proud to be the world's leading chemistry community with 175 years of history and over 50,000 members (www.rsc.org). According to the Daily Mail of June 27, 2012 (www.dailymail.co.uk/sciencetech/article-2165277) they were so perplexed with the ancient question ***"Why does hot water freeze faster than cold water?"*** that they offered a GBP 1,000 prize to any member of the public who could provide an answer "but as yet the question still remains unanswered".

This phenomenon became famous in the 1960's when Tanzanian student Erasto Mpemba studied it closely when his teachers and professors couldn't explain and sometimes even made fun of his observations.

However, as perplexing as one phenomenon may be, even the exact NUMBER of water anomalies is a mystery. The evidence in this chapter indicates that Mpemba, The Royal Society of Chemistry and others ARE ONLY EXPLORING THE TIP OF THE ICEBERG (pun intended – the iceberg is just another anomaly!)

Because, even though water is such a vital substance, if not the very basis for all life on Earth, your average school teacher couldn't tell you much about its anomalies. That's because, oddly enough, science hasn't fully figured it out yet. But before we fully figure them all out, before we even ask for full PROVABLE explanations – let's see what is the complete LIST of anomalies of water KNOWN TO SCIENTISTS?

SEVENTY THREE ANOMALIES…

You're reading it right – ***seventy three water anomalies*** have been researched and listed by Martin Chaplin, BSc, PhD CChem, FRSC[8], an Emeritus Professor of Applied Science at London South Bank University (http://www1.lsbu.ac.uk/water/martin_chaplin.html) I admire and am grateful for the great work of Dr. Chaplin, who has dedicated an entire and handsomely illustrated website to water anomalies: **http://www1.lsbu.ac.uk/water/water_anomalies.html** and more broadly on water science : **http://www1.lsbu.ac.uk/water/water_structure_science.html**

The water anomalies listed by Martin Chaplin are further discussed by Edwin Cartlidge, David Robson and Michael Marshall of New Scientist Magazine www.NewScientist.com

So we're having a lot of water anomalies at hand already. At least **73** known to science. But wait, the plot keeps thickening…

Recommended book: ***WATER – Molecular Structure and Properties*** by Xiao Feng Pang of the University of Electronic Science and Technology, China. The entire 492-page book is very informative, however you may want to pay special attention to the chapter "The Properties of Water and Its Anomalies" (pages 89-202). Available at Amazon: www.amazon.com/Water-Properties-Xiao-Feng-Pang/dp/9814440426

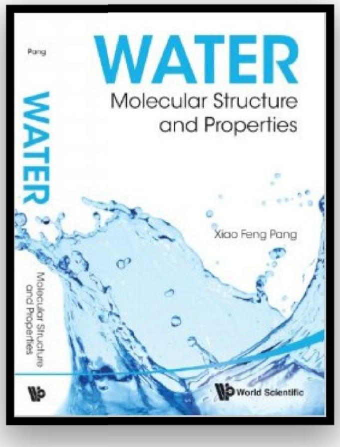

Quick check: just how much water do we have?

Speaking about anomalies, here's one "anomaly" that I haven't seen anybody counting as an anomaly in connection with water – and that is the anomaly of Planet Earth itself in regards to water.

Like NASA Earth Observatory stated, ***"Earth is a water planet:*** *three-quarters of the surface is covered by water, and water-rich clouds fill the sky."*

NASA estimates that on Earth we have **1,385,984,000 cubic kilometers** (366,138,237,820,000,000,000 U.S. gallons) of water. And now scientists are saying that there's much more water in Ringwoodite and more (separately and much closer) buried

---

[8] Fellow of the Royal Society of Chemistry (UK, USA, Brazil, China, Germany, India and Japan)

under the oceans (doi:10.1038/nature12858). Furthermore, according to Dr. Emoto's book 'Messages in Water' (pages 139-140), a May 1997 NASA report titled "Water Came Flying from the Ultimate Limits of Space", frozen water keeps coming down from outer space, vaporizes into the atmosphere and adds to our water supply, and have probably been doing so for the past 4.6 billion years.

Is that a lot of water? Well, let's simply COMPARE the planets in our system. Mars has some water but its water is mostly below freezing point, and the other planets are very dry in comparison to Earth. Therefore, if we consider Waterfuel in any extent, our planet would be THE place to use water to energize our lifestyle. Like Sir Anthony Griffin's vision (Chapter 10) of "ships floating on their own fuel". Do you see it?

China embraces desalination – "China Turns to the Sea for Fresh Water" (April 10, 2015): www.bloomberg.com/news/articles/2015-04-09/china-embraces-desalination-to-ease-water-shortages

As stated by in their March 15, 2010 article about desalination, titled "The Big Idea" http://ngm.nationalgeographic.com/big-idea/09/desalination, National Geographic states:

> ***"There's no shortage of water on the blue planet — just a shortage of fresh water. New technologies may offer better ways to get the salt out."***

National Geographic is right! Now let's phase it to the energy angle:

> ***There's no shortage of fresh water – it's nothing but A SHORTAGE OF CHEAP ENERGY TO DESALINATE IT.***

Now let me ask you an important question that may seem crazy at first, bear with me...

Photo: Godot13, Wikimedia.org

Well, can you tell what's really wrong with this duck? Because…

1) It doesn't look like a duck…

2) It doesn't walk like a duck…

3) And it doesn't quack like a duck!

Why is this duck so wrong?

You know why. Because it's not a duck – it's an elephant!

Do you think I'm being silly right now? Here, let me show you what I mean. See, we've been looking at an elephant – you can say elephant-size evidence – and we've been saying all these years: "What's wrong with this duck? What's wrong with this duck? It is such an abnormal duck!"

I'm talking about water. Did you see how many water anomalies there are? "It has so many anomalies", we say, or in other words we say: ***"Water is abnormal!"***

Abnormal as WHAT??? ***As a substance***. Actually we've been saying: "Water is an abnormal SUBSTANCE." That's what we've been saying. Do you agree with me so far?

Now, look again – how many anomalies? **Way too many,** maybe?

Because, what is an abnormal duck? Maybe it's too big, or it's too small, or maybe it wears Italian fashion spectacles and reads sci-fi comics. That would be an abnormal duck. But a duck which is as big as an elephant, and looks like an elephant, a duck that walks like an elephants and sounds like an elephant and behaves like an elephant… well, my friend, you'd say I was insane if I declared right now that this was "an abnormal duck". Of course it's not a duck by any measure – it's an elephant and nothing but an elephant!

Back to water – how can a "substance" with **SO MANY ANOMALIES** still be called "abnormal substance"??? Maybe it's not even a substance at all???

Has anybody asked this question before?

But if not a substance, you ask, then what is it after all? A life form? Some of the water characteristics we investigated may be compared to life or likened to traits of common life forms, such as memory, or strong affinity to its own kind that makes it communicate and/or move toward its own kind, and so forth.

But it's not a regular life form, not like other life forms that we've seen and known.

Maybe it's something else entirely, **SOMETHING IN THE MIDDLE?** I tend to think it is. Based on the evidence presented so far about water's extreme uniqueness, do you agree? And if you don't agree, would you agree at the very least that in light of the evidence such conclusion is not crazy enough to be ignored and that maybe, just maybe, somebody should look into this and find a new classification for water? Something in between "life form" and "substance"?

But wait, what if I told you that such a classification already exists? What would it or could it be called?

Simply, it's called "water".

No, not down to H_2O again… because chemistry cannot contain all the unique characteristics that I've already shown you for water, and others you will discover in later chapters of this book. "H_2O" can be the beginning of a long story, just like the sheer SIZE of an elephant can only be the beginning of its full description.

A "new" old thing… Water.

Neither substance nor life form.

Water… its very own "species". And as far as I know…

…this is a TOTALLY NEW, NEVER BEFORE PUBLISHED IDEA. DON'T ATTACK IT JUST YET. LET IT SINK IN.

What's the Scientific Significance, then?

Professor Martin Chaplin listed 73 water anomalies. A Spanish professor listed only 42 of them for his students (why?). From my own experimentation and observations on water, and all the science references listed here, I know more water anomalies which aren't even listed, such as the very list itself – it's just too long… But the major problem is not just the sheer *number* of anomalies, whether it's 73 or "only" 42 anomalies or any other number.

The major difference between "dead" matter and water seems to be water's ability to ***have its own intention*** – or at least to quickly and wordlessly ***record and transfer the intention*** of someone, a living being. And the capacity, in itself, to be more "lively" as in the "living water" repeatedly mentioned by the Bible (Jeremiah 2:13; Zechariah 14:8; Revelation 7:16-17; John 7:37-39, etc.) and other religions including the Koran saying "Water is the source of all living things" – to which many scientists agree. I consider water to be a servant or helper which is always eager to serve life forms and their environment – a major ***life support*** rather than a life form per se. Further study is required to try and discover the response (or more likely, many possible responses) and interactions between water and the following energies:

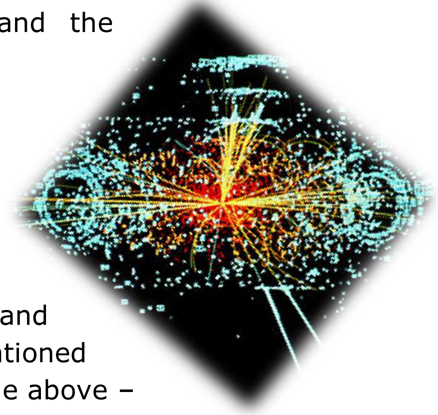

- Cosmic energy
- Extremes of heat and cold
- Velocities approaching light speed
- Extremes of pressure and vacuum
- The entire known spectrum of frequencies
- Life forms other than Professor Ben-Jacob's bacteria, and the genes at Imperial College London, previously mentioned
- The myriad of possible combinations between all of the above – here's a "water adventure" for you to last a lifetime!

Have you seen the action movie "Chain Reaction"? Well you should! It's available on www.Amazon.com and www.NetFlix.com

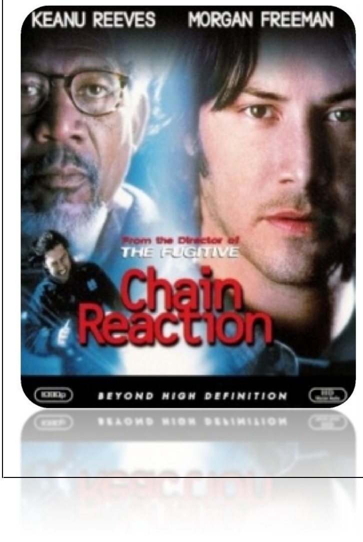

In this feature film, Waterfuel machinist Eddie Kasalivich (Keanu Reeves) accidentally discovers RANDOM MACHINE SOUND that activates the water's ability to split efficiently into hydrogen and oxygen – making this a genuine 'Waterfuel film'. This is not fantasy; like Kasalivich, the late Peter Davey from New Zealand (Chapter 33) was a musician who has reportedly discovered how to excite "calm" water into Waterfuel using sound.

With Keanu Reeves, also starring Rachel Weisz, Morgan Freeman, Fred Ward, Brian Cox, Joanna Cassidy and others, excellently directed by Andrew Davis. I purchased the DVD; always fun to watch it again.

Conclusions

What have we learned so far?

The data in this chapter doesn't directly translate to energy or economy. Or preventing pollution. Or therapy. I just wanted you to see that scientists have long known about the many anomalies of the thing we so lightly call "water" – yet is far from simple.

As Professor Holly Vande Wall puts it: *"Our current best understanding of the electron transfers that give water the properties we observe* ***is a statistical average of ever changing interactions so complex as to be quite literally unthinkable."***

Between others, physicist Dr. Shui Yin Lo* has focused his attention on water at the subatomic level. His experiments have given a strong indication that two waters, which may appear the same and may be **chemically the same,** may be different **structurally.**

* Some of his work:
https://www.youtube.com/watch?v=B0U9VXfpsy4
http://www.worldscientific.com/doi/abs/10.1142/S0217984996001048
http://rexresearch.com/Lowatercluster/loclusterwater.html

CAN YOU SEE IT NOW?

WATER IS NOT *just* H2O!

In fact, far from it. AND THAT'S WHERE WATERFUEL COMES IN…

Chapter 2.
So What is Waterfuel?

Presented by Ozzie Freedom

Waterfuel is not "Hydrogen" because it has many other categories as you can see below, and those are sometimes interconnected or even combined with other Cleantech such as Solar and Wind. In the table below you will see how the branches of Waterfuel relate to the TYPE OF TECHNOLOGY (gas or liquid, hot or cold, etc.) and to the APPLICATION (heating, electricity, engines, etc.)

APPLICATION							TYPE OF TECHNOLOGY				
Engines – assist	**Heat / mechanical**	**Electricity**	**Water cars**	**Industry: welding, etc.**	**Therapy**	**TECHNOLOGY**	**Hydrogen GAS**	**Water – liquid**	**Water to gas**	**Cold Process**	**Other**
	X	X				***HYDROPOWER***: harnessing the power of water's NATURAL MOTION such as rivers, waterfalls, dams, ocean tides and waves, etc. This power can be used to generate electricity, or used directly as in the case of driving millstones or pumping water for irrigation or household use. Would you consider it Waterfuel? It's water, and it's energy, so minimally it can be classified as a sister technology.		X		X	
	X			X		***BIOMIMICRY:*** Viktor Schauberger extracted energy from water – and harnessed the natural "behavior" of water – in terms of 'biomimicry'. This means that rather than trying to change nature by standard mechanical engineering, as in Hydropower, he thought in reverse and imitated how living creatures do it.		X		X	
X	X	X	X	X		***HYDROGEN***: hydrogen has its place here because in so many cases it is derived from water – or used with water – as a fuel. The reason it is categorized separately is that hydrogen can be derived from substances other than water, such as Diesel fuel. It is closely related to Waterfuel.	X				
					X	***THERAPEUTIC***: as a side benefit, the same or similar devices that create certain types of Waterfuel also create water – or gas – that has unique therapeutic qualities. While not "Fuel" per se, I've including proof that the Patent office(s) around the world are aware of this use, simply because many of my readers are interested in this unique use of the technology; my students told me of benefits for themselves, family, pets.		X	X	X	X
				X		***WASTE TREATMENT*** done by incinerating it with Waterfuel (combustible gas type), the advantage being is that unlike regular fuel that can be used, Waterfuel isn't going to add pollution.			X		
				X		***RADIOACTIVE WASTE TREATMENT*** not only a unique usage, but also considered water's therapeutic help to heal the environment.			X		
X	X	X	X	X		***WATERFUEL***: using water (not water motion but the substance itself) or its by-products for energy. This is a very generalized definition but the next page gives you several common examples of real Waterfuel…		X	X	X	X
X	X	X	X	X	X	***HARD-TO-CATEGORIZE***: new technologies that constantly emerge from the creativity of scientists and students whenever they apply their minds to the same old problems of energy, the environment and better living conditions.	X	X	X	X	X

COMMON EXAMPLES OF WATERFUEL:

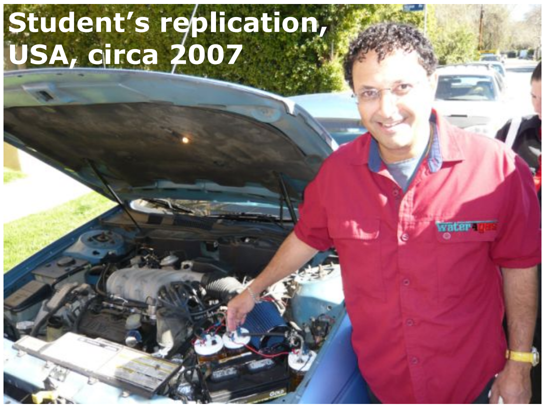
Student's replication, USA, circa 2007

- Water electrolyzed to extract its hydrogen, which is then burned for energy – or alternatively used in a ***fuel cell*** – which is a device that turns hydrogen into electricity (not to be confused with the term ***Water Fuel Cell*** which usually describes a water electrolyzer that produces combustible gas).

- Water electrolyzed – in which case both hydrogen AND oxygen are used as a fuel, together. Which makes sense not only because the oxygen is required for combustion, but also for other reasons discussed extensively in later chapters. As you will find soon, the description "used as a fuel" is a limited view of what really happens. George Wiseman, Moray King and others discuss where the energy is coming from. ***It's not from "burning water" because the water doesn't burn!***

- To some degree, water can be mixed with fuel to save money and give it better combustion quality. A simple mix won't do because the water would quickly separate from the oil; however, water and fuel can be emulsified – mixed by centrifugal force to make a stable mix called "emulsion" much like homogenized milk – tiny oil particles are now floating throughout the water. List of Patents and formulas in Chapter 24.

- Water injection is when a spray of water – or water vapor – is injected into an internal combustion engine to improve its operation and efficiency.

- Hydrosonic, Cavitation, or "Water Hammer" happens in ***gasless cold water*** and is not related to combustion (flame, engines). It is a natural phenomenon of tiny bubbles forming in the water that can be harnessed for energy.

- Water mist can be exploded by high voltage from a simple automotive spark plug. Just a cold fog with no fuel involved. True – and OLD (Chapter 17).

- Cold Fusion (also called by many other names, see Chapter 28) is where a LOW-TEMPERATURE, VERY-LOW-RADIATION atomic reaction is generated in water, and the resulting energy harnessed for electricity or heat.

- BlackLight: Dr. Randell Mill's company (Chapter 29) offers a technology to generate ***from tiny amounts of water*** more than 200 times the energy of burning hydrogen. Which leaves more than enough energy to extract the necessary hydrogen from water by electrolysis. According to one source, and common sense, the little water needed can even be extracted from the humidity in the air… No fossil fuel involved – ***the only fuel used here is water***.

- The late Paul Pantone teaches GEET, his unique Waterfuel technology in Chapter 30.

- The late Viktor Schauberger teaches how to make petrol from water. His method does not produce flammable gas – it makes the water itself flammable (Chapter 31).

- Kinetic Power Plant (KPP) by Rosch is a system that extracts energy from water using Archimedes' Law. At first glance it sounds and looks like a "perpetual motion" machine, but to my understanding it's not, thanks to a simple capability of water – buoyancy – that hasn't been effectively harnessed before. This is not some school experiment – Rosch extracts high levels of electrical power from cold water and some mechanics (Chapter 32).

- All water stores useful energy: kinetic (oceans, rivers), gravity (dams, waterfalls) and even hidden energies excited by evaporation or sound (Chapter 33).

Waterfuel
the Story
the Dream
the Reality

What problems are we facing today?

1. Economy – high costs of using fossil fuels and natural gas,
2. Environment – we MUST minimize pollution NOW – not in the future.

© Photl.com

These two problems have been discussed countless times, and are being discussed right now at homes, offices and online discussions/blogs across the world. But this discussion is far from new. Way back in **1904**, engineer Booth and chemist Kershaw published the book ***SMOKE PREVENTION AND FUEL ECONOMY*** (Archibald, Constable & Co., London). Here is what they said about the importance of better combustion to prevent smoke:

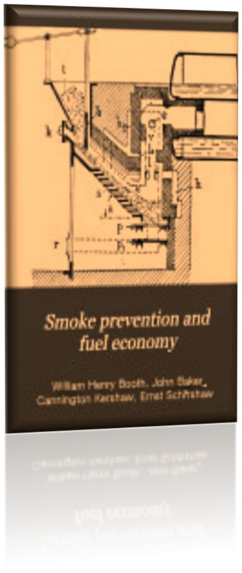

> *"It is customary to speak of smoke and the smoke nuisance as though black smoke were the only feature of imperfect combustion that demanded a remedy. But it cannot be too strongly emphasized that the visible impurities of the waste gases from factory chimneys are the least harmful part of their constituents; and that the invisible gases, which too often escape as the result of imperfect combustion, are far more detrimental in their effects upon vegetation and upon the health of the community.*
>
> *"These invisible gases consist of unaltered hydro-carbons and of carbon monoxide; their presence is due either to deficiency of air, or to the lack of the requisite temperature in the combustion area.*
>
> *"Smoke is the visible sign of the presence of these deleterious[9] gases. It is, therefore, a useful signal of something wrong in the combustion process. Smoke ought to be attacked, not only because it brings dirt and depression in its train, but because its emission is accompanied by that of gases which are directly detrimental to the health of all living things, and at the same time carry away much heat from the plant of the fuel user. Both on humanitarian and economic grounds its suppression is called for."*
>
> *~Booth & Kershaw,* ***1904***

OK my friends, 113 YEARS have gone flying by... But HAVE WE TAKEN THE RIGHT ACTIONS to improve combustion and prevent smoke???

Dream vs. Reality

WATERFUEL is different things to different people. In 2006 when I created the logo **Water4Gas** and started promoting it to the world, one of the most frequent questions I was getting was: "Is this a water car?" Many people to whom I demonstrate Waterfuel are still asking this same question today. Films, books and shows about "water cars" have been created (some are listed in Chapter 38).

The Dream

So it seems that "water car" must have been a long time dream of millions, if not billions of people. This dream has been spurred by media publications of water car developments that were "just being completed" and were about to arrive shortly.

---

[9] Having a harmful effect; injurious.

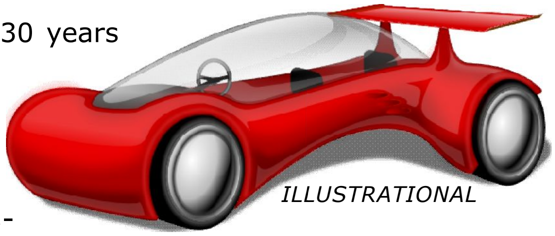

I vividly remember watching TV in Israel, nearly 30 years ago. The early evening news featured a pretty looking red car running ON WATER ALONE (so they said) in the streets of France. The reporter said enthusiastically that the car, invented in France, was fully developed and ready to be mass-produced within two months. He said it would cost about 200,000 Francs which didn't sound too expensive (I believe the dollar equivalent was $15,000 at the time).

The car looked modern, fully developed and very appealing, as you would expect from a French vehicle. Something that everybody would want to have.

I waited two months… Nothing. I waited two decades… Still nothing. Dead silence. And a strange feeling started creeping that something went awfully wrong – ***"How come nobody even mentions that pretty red car that ran on water???"***

Fast forward to 2008 – Genepax Co. Ltd. From Osaka, Japan, unveiled a car claimed to run on nothing but water and air. News outlets dubbed the vehicle "Waterfuel car." Its onboard 'Water Energy System' extracted hydrogen that was then used by a fuel cell to propel a small Indian-made ***electric*** car REVAi (known as G-Wiz in the UK).

The company planned on selling this car for about ¥2,000,000 ($18,522) but later in 2009 they shut down and quietly disappeared. On their website **www.genepax.co.jp** (now long gone) I found this strange message:

> ***Thank you for visiting our website.***
> ***We at GENEPAX have strived to develop new technologies to enable environment friendly energy systems, to mitigate environmental risks such as those posed by global warming.***
> ***The systems that we have proposed have received warm words of support from many people.***
>
> ***However, we have yet to overcome the many obstacles we face in the current world, to bring our systems to market. Moreover, the costs of development have become very large. As our resources are very limited, we need to retrench and reassess our resources and our development plans at this time, and we are accordingly closing our website.***
>
> ***We express our deep gratitude for the supportive messages we have received. We hope that you will continue to be supportive of efforts to develop cleaner and more environment friendly energies, and we will continue to strive to develop systems to preserve our environment.***
>
> ***February 10th, 2009***
> ***Yasuyuki Takahashi***
> ***Representative Director***
> ***GENEPAX***

Who shuts down a website that attracts worldwide attention if they were still trying to achieve their goal??? It is my personal belief that Mr. Takahashi is a truly great man with sincere goals to help Mankind, who was forced to quietly shut down. (~Ozzie)

And this story is not alone…but fortunately, the bigger picture has good surprises, too.

Is the Dream still alive?

Let me share with you what I have personally experienced since 2006, partially represented in the images below. Over 55,000 copies of my **Water4Gas** books have been sold, making them bestsellers in electronic publishing; and I know people are still reading them because we're getting requests from long-time readers to get second copies after they've lost their original books. Nowadays, new users are asking for books and tech support with Waterfuel systems they have purchased online. Nearly 15,000 discs and DVDs have been sold to train mechanics and system builders in a visual form. Many small firms worldwide call themselves or their products **Water4Gas** without direct connection to me.

The top images are of unsolicited TV news coverage mentioned elsewhere in this book. And then, there are sample photos from Waterfuel events that folks of all age brackets and from all walks of life have attended across the USA. The events that pulled the most attention (see bottom right) were my Saturday events in Woodley Park, Los Angeles, which pulled VIP visitors from across the country, from Hawaii and even from remote places like Korea and Japan, who came to see the wonder of Waterfuel in action.

Also popular were the 'HHO Rallies' that Rick McKean arranged in Carlsbad, New Mexico (not shown here), as well as the 'HHO Games & Exposition' events that Joe Shea ran in Florida (middle right and middle left). The two photos at bottom left are from practical Waterfuel classes that I've conducted in a Los Angeles high school (sponsored by the Indigo Project) and in Louisiana (sponsored by LaBella Auto Repair). Rick McKean conducted many more classes in New Mexico.

Nowadays, as the pace quickens of people that do care about the environment, the control of their personal health and future generations, millions of people are still searching online for ways to save fuel and reduce pollution. At this time of writing, in the past 11 months alone the **Water4Gas** video shown below has received 72.4 million views on Facebook. In it, Waterfuel enthusiast Grant Sheehan presents the simplicity and benefits of his **Water4Gas** system installed by **Water4Gas** student Alex Rivera from www.How2SaveFuel.com. The hundreds of success stories and testimonial displayed at http://water4gas.com/success/ and other pages around the web have been viewed by dozens of millions more since 2006, totaling well over 100 million views.

Seen on Facebook May 2017

Water4Gas shared Anonymous's video.
Published by Ozzie Freedom · May 22, 2017 ·

WHAT ALL THE BIG OIL COMPANIES DON'T WANT YOU TO KNOW

72,390,937 Views

Anonymous
June 23, 2016 ·

How long until this catches on globally?

h/t Hydrogen On Demand

72 million views in 11 months

Thanks to Habibur Rahman from Burnley, Lancashire, UK who got it published on FB

When you search for ‘waterfuel’ on Google, YouTube, Vimeo, Facebook, you find out that the dream is not only alive but also expanding rapidly – many plans, books, experiments, products and even toys to teach young children that Waterfuel systems are workable:

Do you see it? My own conclusion is: ***THE WORLD WANTS WATERFUEL!!***

The Reality

The water-car dream has been with me ever since I saw that French water-car on TV. Eventually the reality started to sink in that there was some serious political problem here, working against the technology, against the dream. If there’s a good dream, like space travel, then the educational system and the media should endorse the dream until it becomes a reality, right? That’s exactly what was happening before the 1960’s Moon missions, and now Elon Musk’s Space-X.

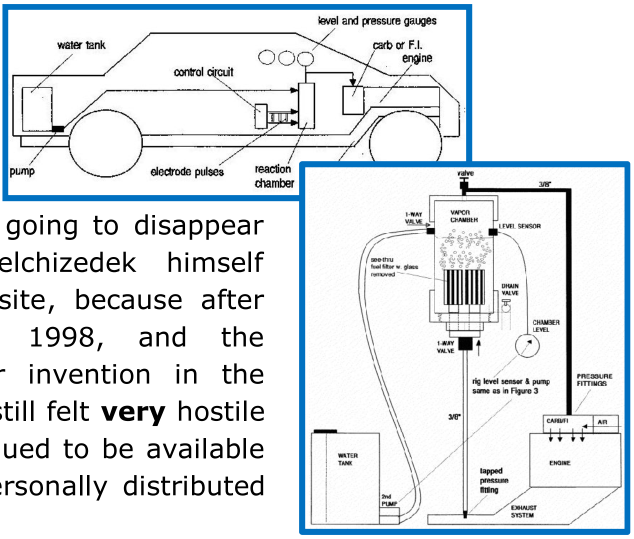

In Feb. 2002 Mr. Drunvalo Melchizedek of Spirit of Ma’at (www.spiritofmaat.com) released one of the first open source “water-car plans”. I hurried up and downloaded the plans, thinking they were going to disappear shortly. If I’m not mistaken, Mr. Melchizedek himself expressed the same concern on his website, because after Stanley Meyer’s mysterious death in 1998, and the suppression of Daniel Dingle’s water-car invention in the Philippines, the atmosphere of those days still felt **very** hostile to Waterfuel. Surprisingly, the plans continued to be available and are still in circulation today, and I personally distributed tens of thousands more copies.

I offered my friend's father, a seasoned mechanic from northern California, to combine forces and build a car based on those free plans. He reviewed them and assured me that the project was impractical. I couldn't build such a car by myself at home; I had no garage but a tiny little room in an apartment building near Universal Studios, with no space for power tools or large projects of any kind. I was a poor immigrant with near-zero funds and little spare time after my day job. I realized that the problem was **complexity.** And let's not forget, **affordability** is a major concern for most people. I started looking for something that I COULD DO with simple hand tools, little time and pocket change.

In 2006 I finally found something.

Bill Lang (Florida) heard that I was experimenting with fuel additives (distant cousins of Waterfuel, aimed at the same purpose of better fuel economy and lower emissions). He introduced me to Waterfuel and sent me to his brother Tom in California to install a Waterfuel device in my car, a 20-year old Ford Bronco that another friend donated. I imagined the car blowing up in fire and smoke, but decided I had nothing to lose.

The photo above and this one show the vehicle and simple device →
that Moray King shows in his presentation in Chapter 12.

What they gave me for free was a vaporizer – nothing but a kitchen jar with tap water that Tom filled from his garden hose, which introduced some moisture into the air intake of my car. I was astounded when after **its first 30 seconds** of operation it stopped the engine from knocking and continued to clean it (removing carbon deposits) and to smoothen its operation over the next few days. The terrible emissions problem vanished even though I made no changes to the engine. The results amazed me and I was even more pleased with its **sheer simplicity.**

Also, I realized that ANY Waterfuel, even the simplest device, can do a whole lot of good.

With my next paycheck I bought an 'electrolyzer' from Bill Lang. This was a jar with electric wires that created water electrolysis and fed a hydrogen/oxygen mixture to my engine. My ancient clunker ran so much better now – and I was getting 56% better mileage. → I started building such electrolyzers for others and then created the **Water4Gas EXPERIMENTERS CLUB** in 2006 – ***with the openly declared purpose of SHARING what I knew with others – and in exchange improving the technology from their feedbacks, which would come back to them as better tech and so on – ALL THE WHILE PROTECTING MYSELF AND MY STUDENTS BY NOT KEEPING ANY FREE-ENERGY SECRETS.*** The idea worked like a charm – the technology became much better in less than two years, and the club grew from 7-8 experimenters to 1000's in 150+ states and countries. Now I knew that Waterfuel couldn't be ignored anymore as too many people saw it in action either in their own car or on TV, radio, local newspapers and online videos.

COLDWATER CHEVRON
12860 RIVERSIDE DR
NORTH HOLLYWOOD, CA
STN 00093341

03/03/07 00:12:14

Payment From Primary
Account Number
XXXXXXXXXXXX0015
Invoice# D019605
Ref # 208660

Pump#: 18
1.019 G @ $ 2.999
Unle/Self $ 3.06

Total $ 3.06

MPG ↑ 56% !!!

THANK YOU FOR
CHOOSING CHEVRON

The Winning Road Test! Coldwater to Calabasas (Mulholland Dr.) and back w/1.019 Gal compared to 1.591 Gal baseline

VITAL contributions to the tech came from George Wiseman of www.Eagle-Research.com (BC, Canada) who had invented a solution to mileage-unfriendly vehicle computers – and further electronic developments by Mike Kehrli of www.FuelSaver-MPG.com

At this time of writing you cannot step into a dealership and purchase water cars for the entire family, but the dream has turned into less of a dream – and more of a **REALITY.** And now that Big Oil is under a growing pressure from solar power, wind power, ocean power and other alternatives such as all-electric vehicles, Waterfuel is very close to showing its full effect.

But who needs Waterfuel when we have the other technologies? The answer in one word is SYSTEM. System. Take your body for example. Tomes have been written about the importance of a good diet. And experts admit, no diet will ever be effective without drinking good water or juice. We can talk about it all day. But what if you stopped breathing? You'll die. What good is nutrition without breathing? And what good is all of the above without exercise? And resting? And family and social interaction and…the list goes on. Life is a SYSTEM! Likewise, the energy of Planet Earth is a system, too. Wind turbines are useless where there's little wind or in tight spaces (e.g., mines), you get the point.

Waterfuel today is a fast growing industry because, fossil fuel aside, there are things it can do that no other tech is capable of. For example, gas welding that's cleaner and safer, and other applications listed shortly at the beginning of this chapter and further detailed in Chapter 19 and throughout the book. The pictorial table above displays an overview of some Waterfuel sectors and their benefits.

Summary

- I told my personal story – but Waterfuel is the creation of many thousands of individuals throughout history and today. At the beginning of the book I acknowledged 160 major contributors, and others are mentioned throughout the book. Yet more individuals and companies are joining daily either as clients, or developers, investors, students, etc. I'm only adding my push to what I think is a very worthwhile cause. Many independent Waterfuel experimenters and manufacturers exchange notes, photos and product info at http://HODINFO.com/

- Waterfuel's benefits are many for the economy (save fuel, lube, maintenance, time, etc.) and the environment (much less pollution, waste incineration, significantly less noise from engines, etc.), before we even go into workers safety and health, safer transportation and storage of fuel, etc.

- Special applications of Waterfuel cannot be replaced by alternatives, for example the use of Brown's Gas to treat nuclear waste – can you do this with wind? Or Elon Musk's (excellent) batteries? Or biofuel? You see, they all add up to one Cleantech.

- I can tell you that the years have made the technology better, but people are the same, and they are interested in money first and everything else (including ecology) second. And then it's "save-money-now" first and "future savings" second.

- It seems nearly impossible to get the exact number of internal combustion engines running today. An investigation I ran only came up with an estimation of 280 billion Diesel engines. A staggering number – 280,000,000,000 DIESELS! And who knows how many more engines adapted to gasoline, biofuel (which can benefit greatly from Waterfuel), natural gas engines and special "flex" (dual or triple fuel) engines.

  These billions of engines are not going to be replaced tomorrow by wondrous alternatives. You cannot hook up ocean power to heavy trains running far away from the shore, or use solar panels to replace gigantic ship engines. So if you took Waterfuel and you introduced it to all of these billions of engines, and you had 1,000 workers to help you out 24/7, you and your workers would be busy for many years.

- Waterfuel investments are much smaller in comparison:
  - ***Solar:*** typical $500,000/acre, sleeps half the time;
  - ***Wind:*** $2-3 million/turbine, highly unstable power, ridiculous maintenance costs down the road;
  - **Waterfuel:** typical $5k-$10 (industry-strength gas generator, for one example which is in high demand), works 24/7, mobile, enhanced safety, scalable to any size application – even as big as 5 Mega-Watt coal-fired power plants and 800,000 ton Diesel-driven ships.

- In recent years the Waterfuel industry has grown quickly, and I expect it to grow even faster with the help of this book and the 50+ professional players in China, Taiwan, India, Thailand, Australia, Russia and other countries.

  A simple Google search for "HHO industry" will show you these images and many more →

- Validation of various Waterfuel technologies is also on the rise as more Patents and research papers are being published than ever before. Scientists and inventors are not afraid to declare their truth: "Based on our findings we know that {tech so-and-so} is workable, we can prove it – and furthermore we believe it can be mass produced for the benefit of Mankind."

- In the bottom line Waterfuel is not only a reality, but also a fact that can no longer be stopped by opposition, which leads us right into the next two chapters about Waterfuel – who are "THEY" who oppose Waterfuel – and how to eliminate the most dangerous "THEY" of them all.

Practical Waterfuel[10] in Pictures and Highlights

Source: www.waterfuelpro.com

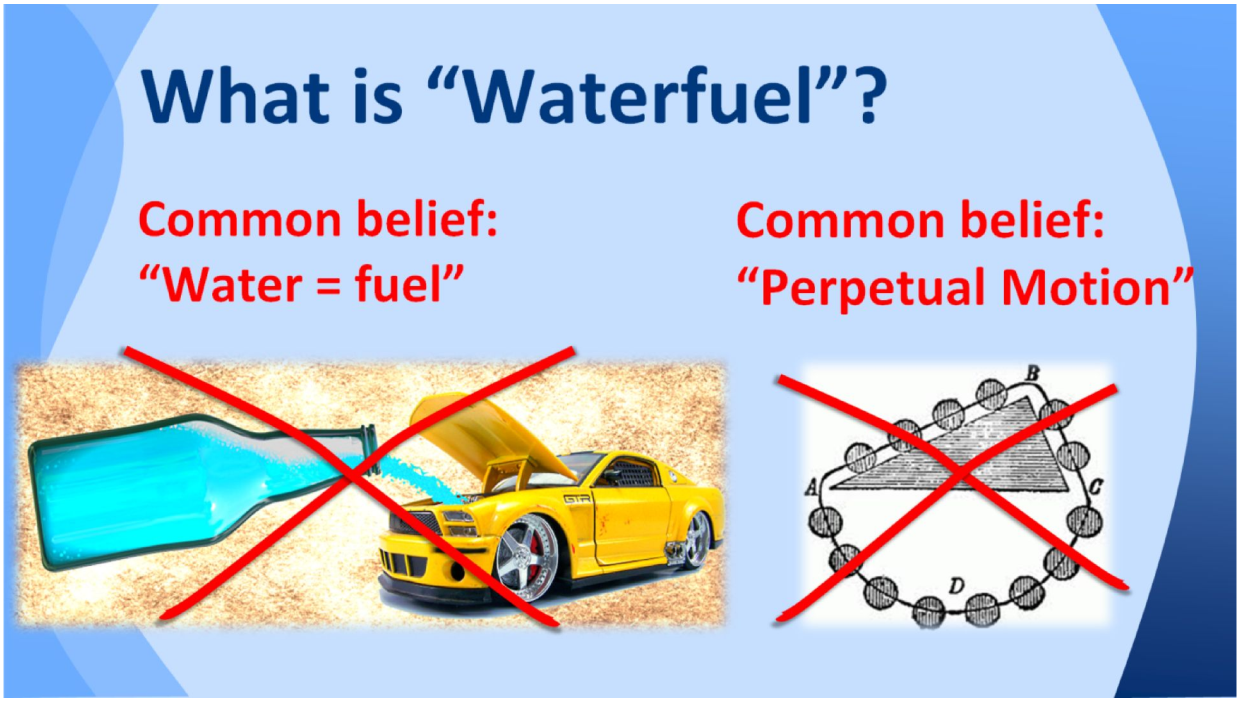

What is “Waterfuel”?

Common belief:
“Water = fuel”

Common belief:
“Perpetual Motion”

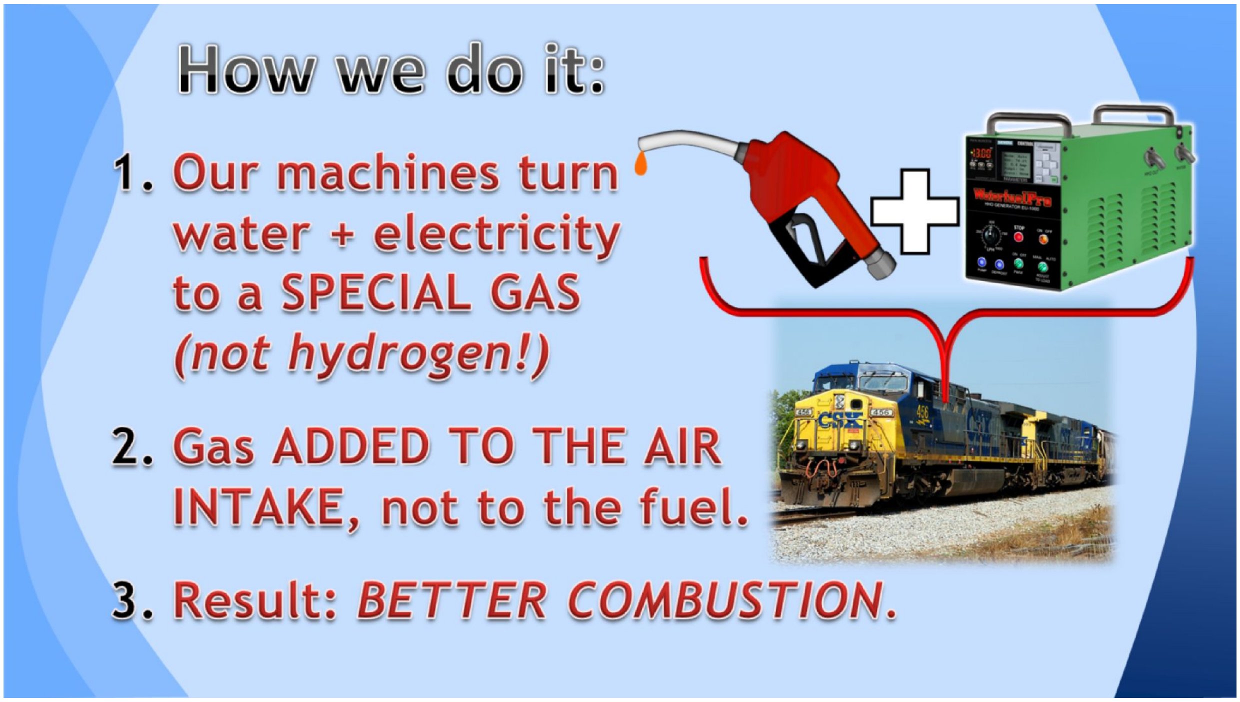

How we do it:

1. Our machines turn water + electricity to a SPECIAL GAS *(not hydrogen!)*
2. Gas ADDED TO THE AIR INTAKE, not to the fuel.
3. Result: *BETTER COMBUSTION.*

---

[10] Focus on HHO/Brown’s Gas but it’s applicable to several Waterfuel technologies.

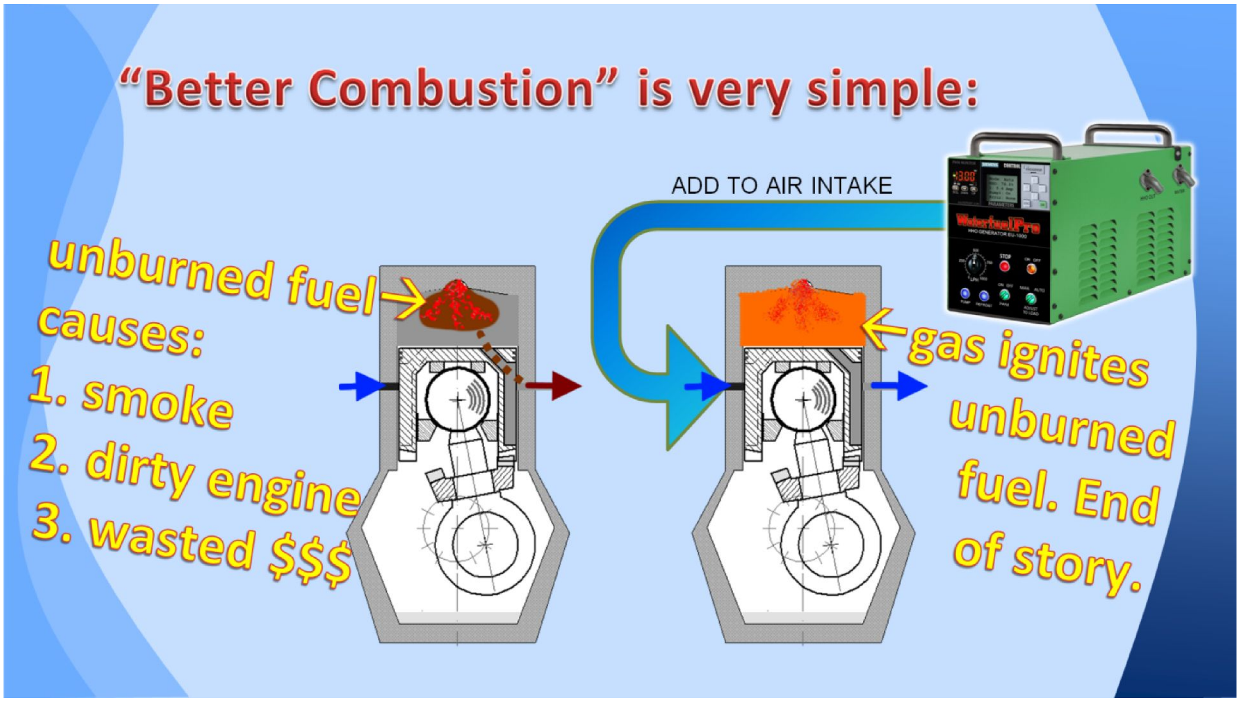

"Better Combustion" is very simple:

ADD TO AIR INTAKE

unburned fuel causes:

1. smoke
2. dirty engine
3. wasted $$$

gas ignites unburned fuel. End of story.

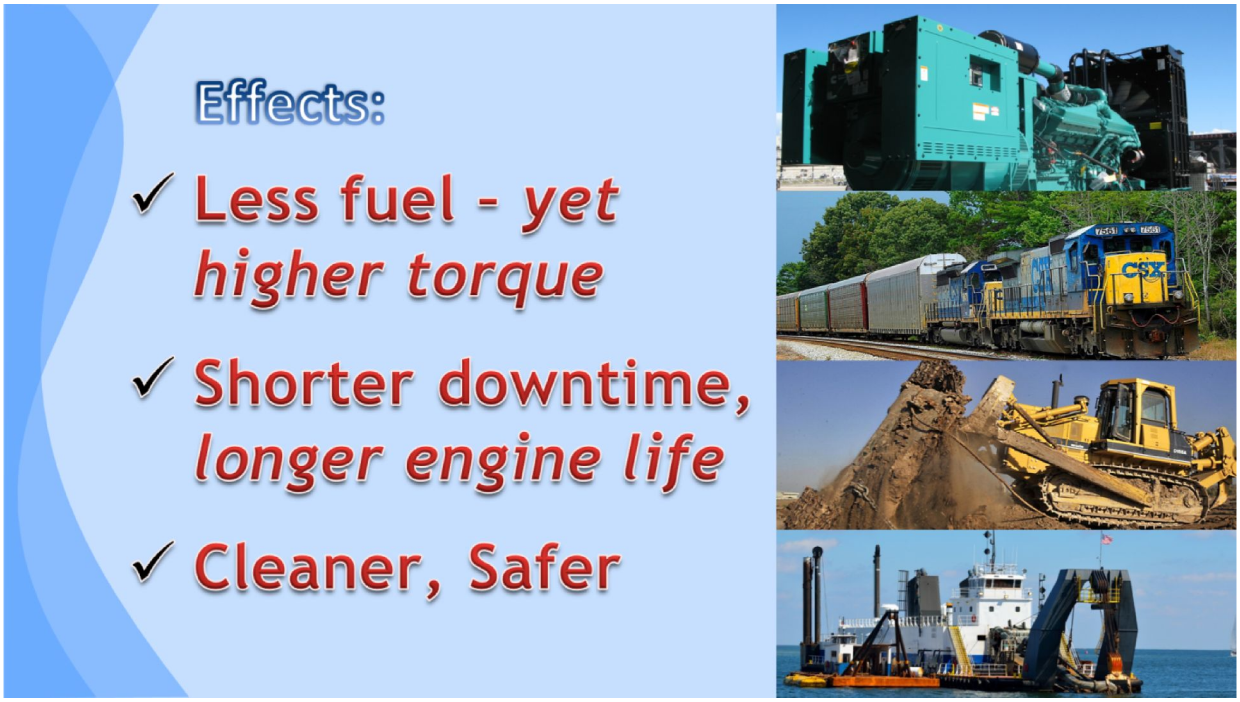

Effects:

- ✓ *Less fuel - yet higher torque*
- ✓ *Shorter downtime, longer engine life*
- ✓ Cleaner, Safer

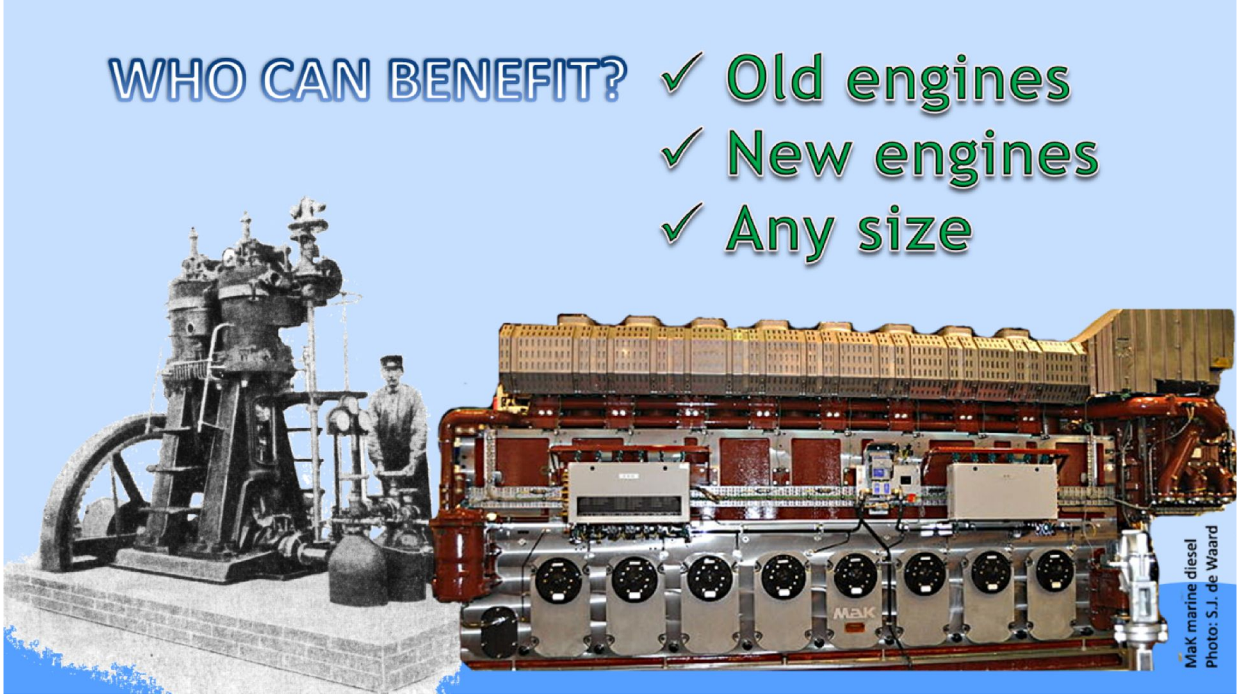

WHO CAN BENEFIT?

- ✓ Old engines
- ✓ New engines
- ✓ Any size

MaK marine diesel
Photo: S.J. de Waard

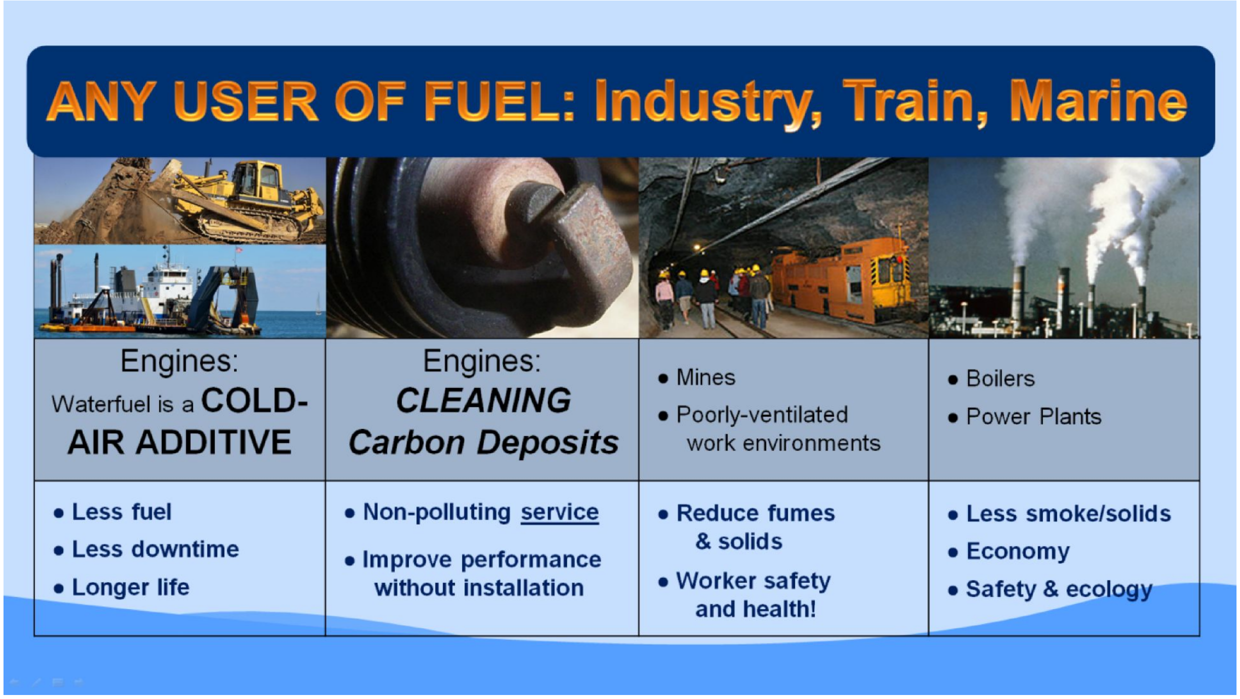

ANY USER OF FUEL: Industry, Train, Marine

Engines: Waterfuel is a **COLD-AIR ADDITIVE**	Engines: ***CLEANING Carbon Deposits***	• Mines • Poorly-ventilated work environments	• Boilers • Power Plants
• Less fuel **• Less downtime** **• Longer life**	**• Non-polluting service** **• Improve performance without installation**	**• Reduce fumes & solids** **• Worker safety and health!**	**• Less smoke/solids** **• Economy** **• Safety & ecology**

Also used for: SUPER-CLEAN FLAME

PHARMA & COSMETICS:	WELDING/CUTTING:	WASTE DISPOSAL:	ACRYLIC:
Cleanest ampoule sealing ever!	Cleaner, safer, faster job	Powerful, clean and focused heat	Cleanest brazing ever!

Super-clean, safer, economical flame

"Old" engines/turbines get new life

Easy install gives your engine more torque – while it cleans its own carbon deposits.

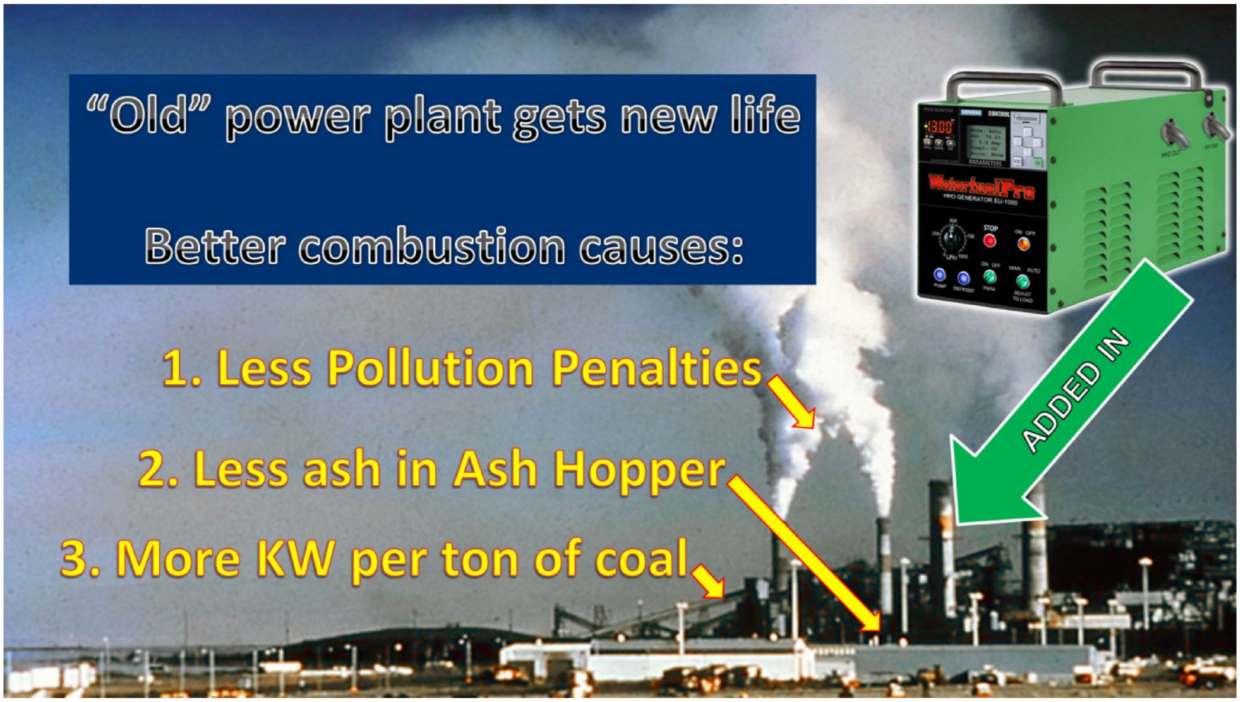

“Old” power plant gets new life

Better combustion causes:

1. Less Pollution Penalties
2. Less ash in Ash Hopper
3. More KW per ton of coal

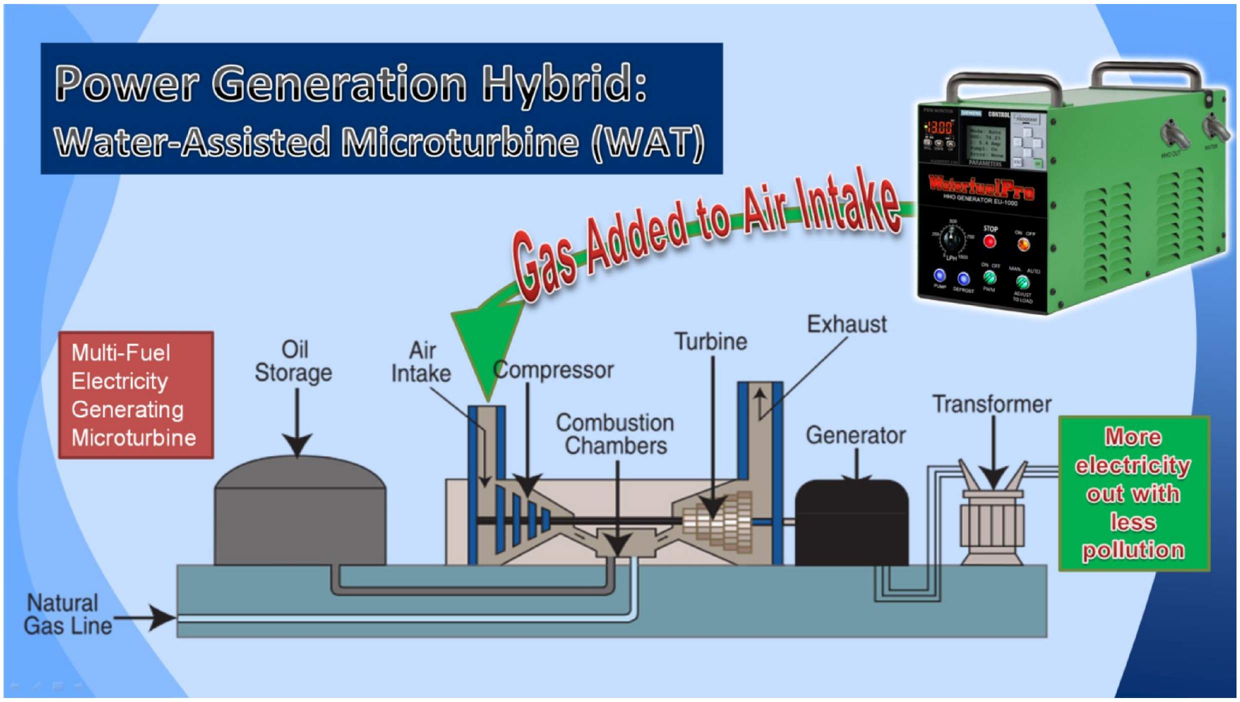

Power Generation Hybrid:
Water-Assisted Microturbine (WAT)

Multi-Fuel Electricity Generating Microturbine

More electricity out with less pollution

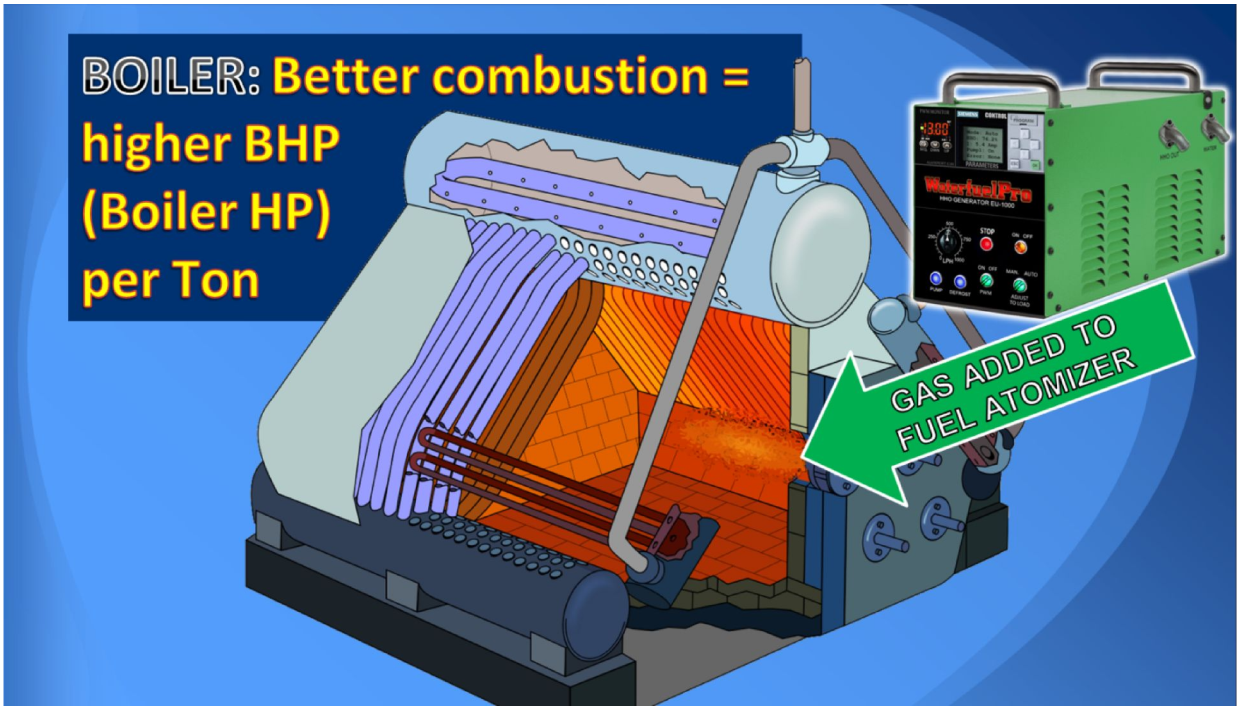

BOILER: Better combustion = higher BHP (Boiler HP) per Ton

GAS ADDED TO FUEL ATOMIZER

Clean carbon deposits to boost performance

20-40 minute service

Does *not* replace Solar & Wind, but has *advantages:*
MOBILITY, many uses, SMALL INVESTMENT

SOLAR:
$2.5 million/MW,
sleeps half the time,
mobility impractical

WIND:
$3-4 million/turbine,
highly unstable,
mobility impractical

WATERFUEL
starts $10k,
scalable,
works 24/7,
mobile

Really?

IMAGES SOURCE: Google.com

Yes! Used 150+ years...

460+ patents... 1000's of products...

Chapter 3.
Who Are "THEY" Who Oppose Waterfuel?

Most people will hurry up and answer "Big Oil" – ***but this is only the tip of a much bigger, mind-boggling iceberg.*** See for yourself.

"THEY" № 1: Fossil Fuel Profits

On their fossil fuel statistics page, the World Bank says: *"Fossil fuel comprises coal, oil, petroleum, and natural gas products."* They are right. But I'm not going to look at separate statistics for each, because Waterfuel can economize on any type of fuel. It can reduce the use of coal in large furnaces, it can lower the use of compressed natural gas (CNG) wherever you use it, be it busses or heating, and so forth. So you see, we're not looking at the limited view of your family car at the gas pump. When the gas pump says you have just forked $100 to fill up a tank of gas, it hurts. But from the point of view of those who hate every possible method of lowering consumption, they look at the big picture. You understand this. So what ARE the big-picture statistics, the big numbers?

Totals: observe the graphs – fossil fuel use is only expected to grow. According to several sources, the world consumes about 90 million oil barrels per day, at roughly $50 a barrel (topped $118 per barrel in 2012). On a yearly basis, that's **$1,642,500,000,000 (1.6 quadrillion)!** Since oil is only one third of all fossil fuels being consumed, when you add Coal and Natural Gas (very roughly 30% cheaper after losses) and you weigh them all together, you and I pay nearly **$4 quadrillion/year** for all our fossil fuel needs. In dollar bills that's enough to *physically* cover the areas of USA, Canada, Mexico, China and Brazil.

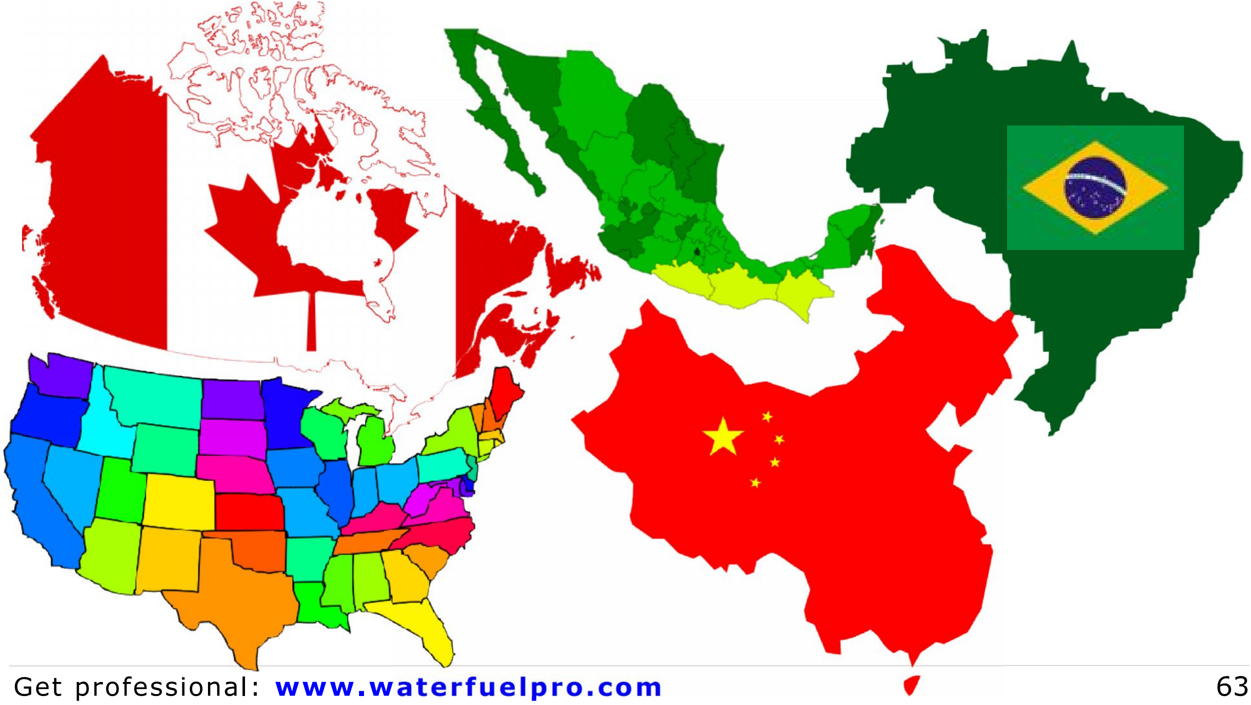

How smelly is it? Read "The Petro Dollar" in Chapter 10 of the eBook "Practical Guide to 'Free-Energy' Devices" by Patrick J. Jelly - www.free-energy-info.co.uk/PJKbook.pdf

U.S. Energy Information Administration expects a linear growth in consumption – the top three graphs below are fossil fuels, namely liquids (mainly gasoline, Diesel and heavy oils),coal and natural gas:

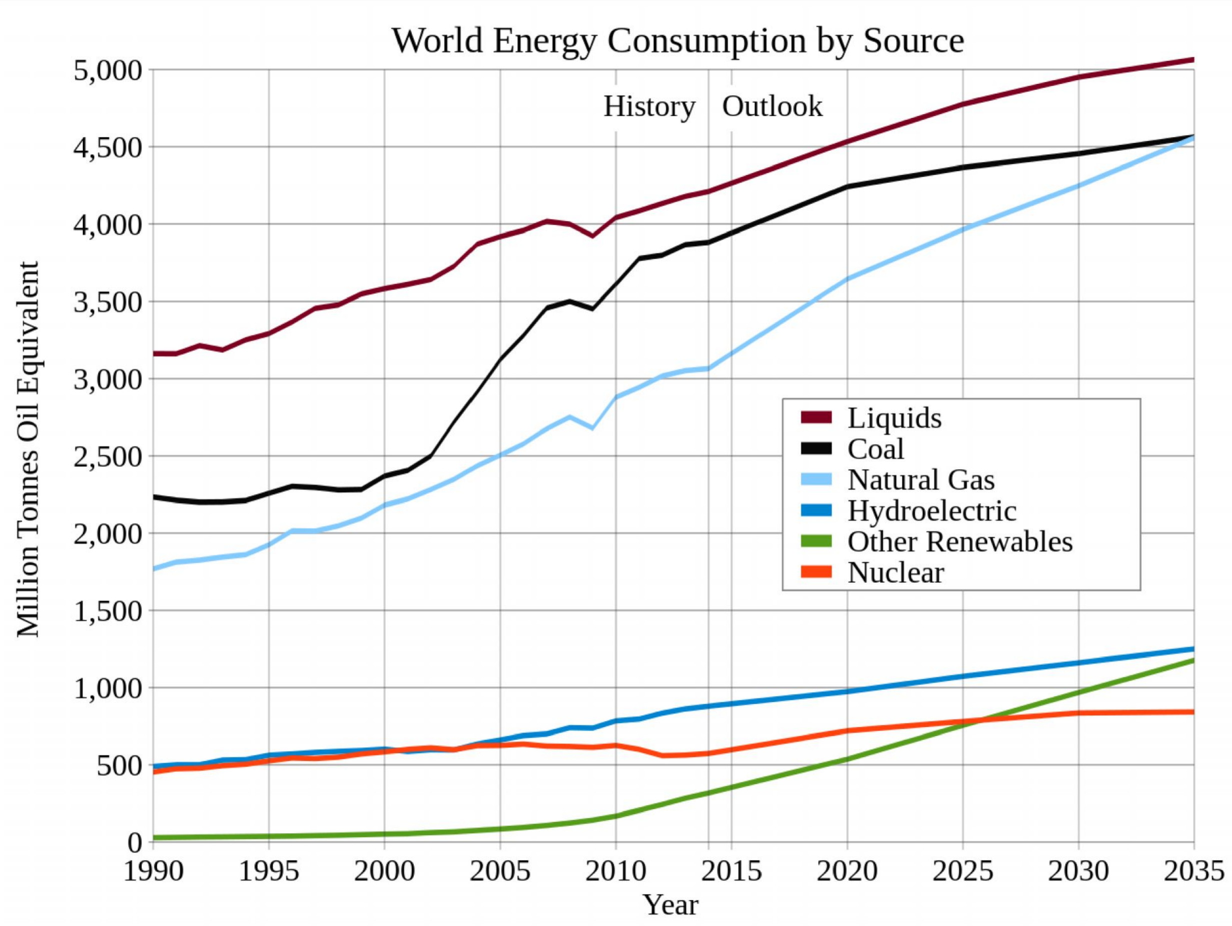

Which means the energy lords expect their fossil fuel revenues to swell far beyond $4 quadrillion! Can you understand now why they don't want us to save "only" 25% with Waterfuel? Because such percentages would translate to ***one quadrillion dollars in lost revenues – each and every year!***

What would you do if somebody put you in charge of keeping an eye on a quadrillion dollars?

Hold on, are you impressed with these gigantic figures? I'm not. Because this is NOT the most dangerous "They" of them all – in fact FAR FROM IT. Read on to find out...

"THEY" № 2: Planned Obsolescence

How big is the automotive industry? According to several sources, the worldwide production and sales of cars and commercial vehicles are 74 million units every year and up to 100 mil by 2020. Hard to translate these numbers to US dollars, but it's gigantic: 10,000 vehicles made – and sold – **every hour** of every day and every night.

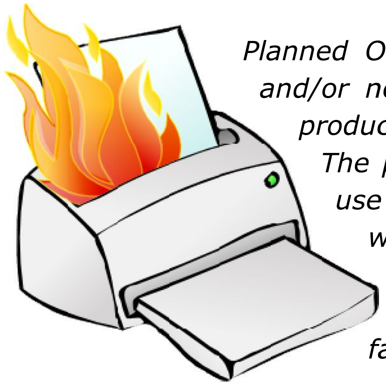

Planned Obsolescence is the process of a product becoming obsolete and/or non-functional after a certain period or amount of use… the product fails and the consumer is under pressure to purchase again. The purpose of planned obsolescence is to hide the real cost-per-use from the consumer, and charge a higher price than they would otherwise be willing to pay. There is, however, the potential backlash of consumers who learn that the manufacturer invested money to make the product obsolete faster.

Watch "*THE LIGHT BULB CONSPIRACY*" https://youtu.be/-1j0XDGIsUg

Not every manufacturer INVESTS in making their products fail, but let me give you some "insider information." Here is a true story: I visited a car merchant and saw a car I'd like to have. The price was quoted: $34,905.00 – sounded very exact. Was it really exact? I used to think that prices were doctored to make us believe they were precisely calculated. I was sure that those "exact" numbers I was seeing were a type of fraud.

But I was wrong!!! In my hi-tech career I stumbled upon large spreadsheets that my project manager had to create and manage with great attention to details. Those spreadsheets included every ingredient that went into making our product (high-end airborne system): parts, labor, production losses, electricity, profit margin, etc.

Then – and that's the important part – the project manager had to enter a TIME FACTOR for each part. Say it was a car, if he wanted to know the TIME FACTOR to enter for the tires, then he should ask the tire engineer how long it would take on the average for that specific tire to break down or wear out under the expected load. Let's say the tire engineer gave it 50,000 miles on the average. He expects that tire to survive 50,000 miles before the user would come back for new tires. That's the "obsolescence" number FOR THE TIRES, you see? The manager cannot guess this number, he just takes it from the guy who really knows tires and he enters the numbers into the spreadsheet.

He does so **for every little component.** His computer calculates everything and spits out a bottom line: for example $34,905.00 for that car I was looking at.

If they sold below this dollar number, their profit would diminish below THEIR red line. YOU may think that they shouldn't profit so much. But we're examining THEIR calculation, not yours. If for instance, in the example above the number was wrong and tires wore out after 100,000 miles (on the average) instead of 50,000 miles, they would lose money. Or in other words, the bottom line sale price would no longer be valid.

Mistakes can happen internally, inside the automaker firm. But let’s assume for a moment that everybody have done their homework and the sale price makes the boss happy. But all of a sudden, an EXTERNAL THREAT COMES ALONG. For example, somebody started paving roads that are softer, void of cracks and generally better for tires. Tires were CORRECTLY calculated at 50,000 miles obsolescence – ***but that was for the bad roads!***

Now on the new roads (still, an example) they wear out half as much or even slower. The average driver comes back – for tires – every 100,000 miles or more. Are you getting the picture? THIS is when the automaker starts freaking out, fearing for his “must have” profits.

It’s true for space stations high above, shoes down below – and everything in between.

Further reference: read the article *“We’re All Losers to A Gadget Industry Built on Planned Obsolescence”* by Rosie Spinks, published in *The Guardian* on March 23, 2015: http://www.theguardian.com/sustainable-business/2015/mar/23/were-are-all-losers-to-gadget-industry-built-on-planned-obsolescence

Now you can see the problem from their viewpoint. Waterfuel makes their vehicles **break down too slowly for their profit greed.** Why would they want a low-cost technology that makes “old” engines young again and damages their car/truck sales?

However, this tradition may change soon. American automaker Ronn Maxwell developed an exotic sports car named Scorpion™ that uses Waterfuel to enhance performance AND fuel economy. Others will surely follow – but let’s not sit and wait because it would not happen unless YOU and I create the change, engine by engine.


The Scorpion
Blending the world of exotic cars with eco-friendly fuel solutions ...
Photo: RonnMotors.com

“THEY” № 3: Mr. Tax Man

I remember times when public servants kept very modest lifestyles in order to serve their voters proudly. Nowadays the “leaders” of most industrialized countries have become too greedy and too lazy, and politicians rake in luxury. They are not self-sustained anymore and must raise more and more taxes to stay in power.

Since on one hand Waterfuel – and all Free-Energy for that matter – are in themselves not taxable, and on the other hand have the added effect of reducing Tax Man’s profits ***from fossil fuel taxation, AND loss of tax money from new vehicles and new engines***, they see no reason to support it. This is not a “conspiracy theory” – it’s a simple math and a simple fact of life today. This will change soon, but that’s what it is at the moment of writing.

"THEY" № 4: Monopolies and Domination

This is not about banks or armies or any such body in particular. Let me give the stage to Viktor Schauberger (1885-1958) who was a water engineer and water scientist, with profound knowledge of its part in agriculture, forestry and all of nature:

> *"The revelation of the secret of water will put an end to all manner of speculation or expediency[11] and their excrescences[12], to which belong war, hatred, impatience and discord of every kind.* ***The thorough study of water therefore signifies the end of monopolies, the end of all domination*** *in the truest sense of the word and the start of a socialism[13] arising from the development of individualism in its most perfect form."*
> *~Viktor Schauberger*

Moray B. King says…

In his lecture ***Water Dissociation with Zero-Point Energy[14]***, renowned physicist Moray B. King counts the ***METHODS*** of suppression exerted on Free Energy inventors (slide 97):

1. **Academic (paradigm violation)**
2. **Block Funding[15]**
3. **Block Patents**
4. **Litigation**
5. **Threats**
6. **Frame with Crime**
7. **Property Destruction**
8. **Assassination.**

---

[11] Expediency: putting more emphasis of achieving a particular end, than on principle.

[12] Excrescence: in this context, a (not so nice) by-product.

[13] Schauberger was not a communist; when he says socialism he simply means a community built on justice for all.

[14] The complete presentation can can be found online in a number of places when you Google ["Water Dissociation with Zero-Point Energy" ppt]

[15] Even the U.S. Air Force was denied Waterfuel funding in 1994 – see page 32 (paragraph B) of their document titled "Pulsed DC and Anode Depolarization in Water Electrolysis for Hydrogen Generation" by Dr. Aly Hafez Shaaban – download courtesy of Patrick J. Kelly http://www.free-energy-info.com/P1.pdf (or search www.researchgate.net)

King continues in the next slide and lists the ***SOURCES*** he sees of such suppression:

- **Academic: Violates Paradigm**
- **Business: Eliminate Competition**
- **Black Operations: Security Issues.**

Also read ***Patent Suppression "For National Security"*** by Gary Vesperman, included in Chapter 0Chapter 21. Much more in his 137-page paper "Energy Invention Suppression Cases" http://siriusdisclosure.com/wp-content/uploads/2013/03/Energy-Suppression-Gary_V.pdf

---

What do we have so far? Four big opponents that *really* don't want to give up their insanely huge profits (financial and political) even when we're all having a hard time and our entire world screams for help.

BUT THE MIGHTIEST, MOST DANGEROUS OF THEM ALL IS…

"THEY" №5: IGNORANCE? Or something worse?

"THEY" № 5 is the *MISUNDERSTANDING* of Waterfuel — and Even Water Itself…

"Only puny secrets need keeping. The biggest secrets are kept by public incredulity[16]." ~Marshall McLuhan (1911-1980) Canadian Professor and public intellectual

Here's one little **example** out of many. A "pulser pump" (also known as a bubble pump) is a VERY simple device that pumps water WITHOUT electricity, fuel, or any mechanical force

---

[16] A feeling that you do not or cannot believe or accept that something is true or real. (Webster)

(tide, wave, etc.) Its working principle is described in the chapter about Viktor Schauberger. Now why would the scientific community reject such a wonderful device? Here's an answer from Michael Turner and Brian Skinner of Loughborough University, stated in their 2013 research paper titled "Investigating The Pulser Pump":

> ***"The Pulser Pump has the innate advantage of being a non-mechanical pumping device, it is unlikely to break down and after initial setup it is self-sustaining. Despite this, there is significant reluctance to adopt this technology in the scientific community. One reason for this is the lack of knowledge of how it operates."***

Ask anybody down the street: "Do you KNOW what water is?" and they'll probably tell you that they most definitely do. In light of the data you've seen in 0, do they??

Now go and ask people you know personally ***who are highly educated,*** if any energy can be extracted from water. They'll give you the same old spiel about hydrogen can be taken out of water, of course, but with inevitable losses, therefore it's no use etc.

Smart people say the scene of knowledge is even uglier…

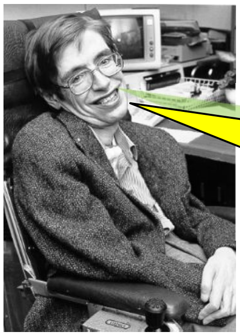

Mr. Stephen William Hawking, one of the greatest scientists of all times, paints an even worse picture of the naked truth:

> ***"The greatest enemy of knowledge is not ignorance; IT IS THE ILLUSION OF KNOWLEDGE."***

Alfred N. Whitehead (1861-1947), English mathematician and philosopher

> ***"Not ignorance, but THE IGNORANCE OF IGNORANCE is the death of knowledge."***

AND THIS IS WHY YOU SHOULD READ THIS BOOK – and have your own copy, always handy to show others.

\- - - - -

For "THEY №5" specifically, in the next chapter you will find several low-cost, simple yet powerful methods to "kill" it.

Chapter 4.

How to Kill The Worst, Most Dangerous "THEY" of Them All?

Which is – per the previous chapter – not specific people but **ignorance enhanced by the illusion of knowledge**. So how do you attack this problem? The answer is so simple that it may look silly to some readers, but it's serious and quite easy:

1) This book, in print, is priced at printing cost, not a penny of profit for me or the publisher! ***So get PRINTED copies of this book and place it PHYSICALLY in the hands of, and on the desks and coffee tables of every opinion leader you can reach.*** If money is a concern, SELL IT to them or get a charity donation to cover these minimal costs; it's rare and valuable. This book – big and heavy in itself – contains references to roughly 10,000 more pages of scientific and governmental documentation, and all this heavy weight of science can be ignored no longer. And while videos and web pages are important, the importance of a PRINTED BOOK cannot be overstated.

2) Make or buy at least one of the "Ignorance Killers" described below. Show everybody why the math they've been taught was silly at best, if not dead wrong.

Ignorance Killer [A]: "Balloons on Toy Truck"

In my YouTube movie shown below I demonstrated with two party balloons connected to a toy truck, how the ***wasted fuel*** (red balloon) is where we extract ***Free-Energy*** from, with which to enhance the ***drivable energy*** (green balloon) thus for the first time I SHOWED IN SUPER-SIMPLE TERMS why no voodoo is necessary. Now you can see – and show others – how a relatively SMALL extraction out of the waste (reducing the huge inefficiencies by just a bit) can explain a very significant gain in fuel economy.

Screenshot from YouTube:
https://youtu.be/zfjX5MosAKo

How to Make

THE COMPONENTS:

- 1 party balloon, red
- 1 party balloon, green
- 1 “T” hose adapter, about 1½ inch (38 mm) – size NOT critical
- 1 toy truck; again, size is not important and almost any size will do.

ASSEMBLY: Put the balloons on the hose adapter as shown, push all the way in and tighten with rubber bands:

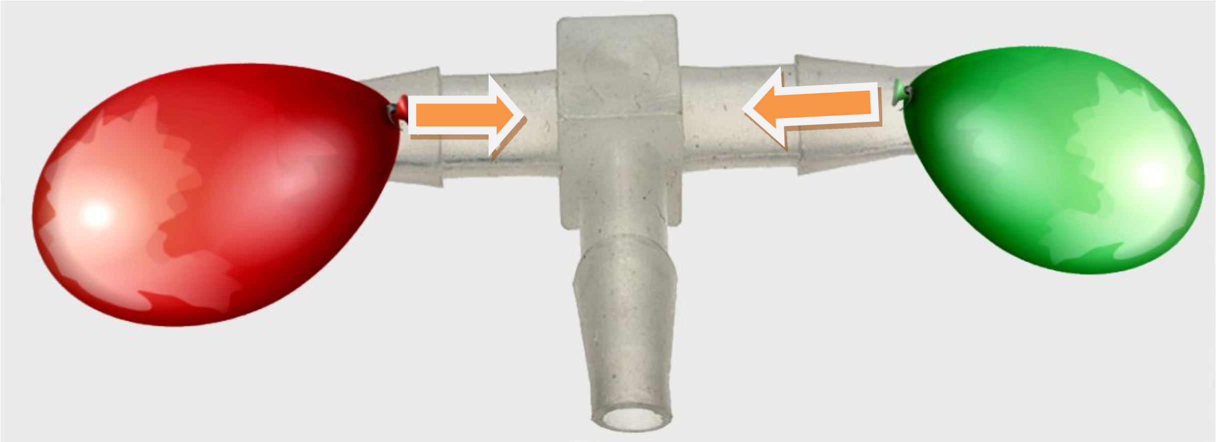

Inflate the balloons and seal the open end of the T adapter. A moderate or even weak inflation is vital; full inflation will keep the balloons too inflated for easy demonstration. Don’t worry about it now, you can adjust it later when preparing to demo.

Install the adapter inside the toy truck; no gluing necessary, a rubber band or two will do to hold the whole thing together →

The Math, and How to Show it

I shot the YouTube video (the screenshot shown above) without much preparation. I simply adjusted the sizes of the balloons to show a much bigger red than green. Then, I played with it a bit until I got the pressure right – too much squeeze on either balloon will push all its air out to the other balloon.

Once you get the hang of it, you’re ready.

Now, during the demonstration explain that the balloons – BOTH of them together – ***represent the fuel coming in.*** Moreover, the red balloon represents the amount of fuel WASTED (doesn’t move the machine forward) which leaves only the green balloon for forward motion. According to gov't sources, over 80% of gasoline is wasted thus less than 20% of every gallon or liter we put in actually gets to the wheels. It's a little bit better for Diesel but nothing dramatic for the purpose of this demonstration.

Now GENTLY squeeze on the red and green sides to show the balance between them, in order to demonstrate that one side expands or shrinks at the expense of the other.

In the final and crucial part, try and push enough air from the red to the green to make the green expand from roughly 20% of the total to 40% of the total. Explain that making the waste (red) shrink from 80% down to 60% – which is not impossible to achieve with Waterfuel – makes the drivable energy (green) expand from 20% to 40% – **effectively doubling the mileage** BECAUSE THE DRIVER ONLY SEES THE GREEN SIDE AND IS RARELY AWARE THAT THE RED SIDE EVEN EXISTS.

This is basically it. You show that "stealing" a bit of TOTALLY WASTED energy (by improving combustion) **automatically** converts to forward motion. You also show that the waste is SO GREAT that any small change makes a big difference in the green side.

Ignorance Killer [B]: "Arrow and Excavator"

The "Arrow and Excavator" ignorance killer is another simple demonstration on how a relatively SMALL extraction out of the waste (reducing the huge inefficiencies) can show a very significant gain in fuel economy. This one has no party balloons and instead of a truck it shows an excavator, in order to appeal to professional decision makers.

How to Make

The construction and exact measurements are not important as long as certain proportions are kept. There are only two components:

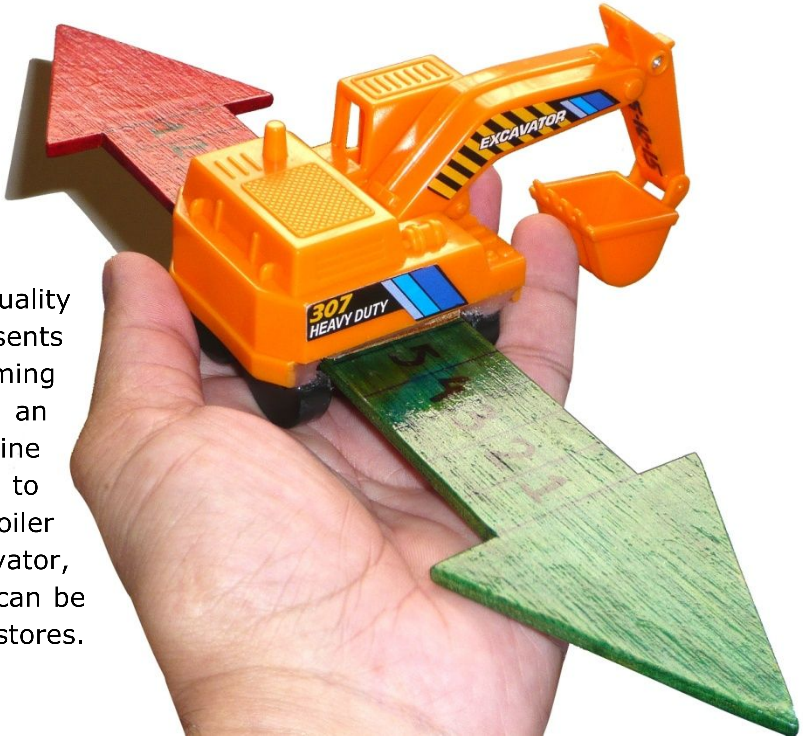

1. A die cast model or quality plastic toy that represents some sort of fuel-consuming Diesel machine (I used an excavator) or any machine that fits what you want to demonstrate such as boiler or tug boat. The excavator, however, is popular and can be found in most toy/model stores.

2. An arrow as shown below; cut it from 1/8" (3mm) plywood; or cut from a plastic sheet of similar thickness. It's important to paint a GREEN part of seven notches and a RED part of seven more notches as shown; ***calculate the size to fit four such notches under the bottom side of the model machine.*** Mark the notches as shown.

ASSEMBLY:

I glued the wheels under the excavator in such a way that creates just enough space for the wooden arrow to slide under the excavator's belly, as shown below. This is not crucial; it's enough that you cut or prepare a slot for the arrow to move under the excavator. The markings you see on the bottom side are non-vital extras; I made them as a mere reminder of the extra benefits of Waterfuel – namely not only savings at the gas pump today but also OIL quality (stays good longer thereby saving oil and prolonging engine life all the while), reduced REPAIRS due to less heat/vibration/carbon, and shorter DOWNTIME (less refueling as well as maintenance) which are extra financial benefits.

The Math, and How to Show it

There are only two steps that become obvious and simple once you demonstrate it to yourself a few times. The mechanical difference between this set and the balloon type becomes obvious too: a much more accurate, easily visible math.

Stress point: the numbers are arbitrary and aimed at understanding the basic math of fuel economy. They must not to be taken as a promise of results. You must clarify this to your client or student!

In the first step you simply position the parts as shown in the photo below. The significance is that IN ROUGH NUMBERS it is assumed that Diesel engines waste 70% of the energy of its incoming fuel – and that's shown in the seven "backwards" RED notches – while we're left with 30% in the GREEN. Immediately we establish the fact that the green is not 100% of fuel. Some know it, some don't, but it's useful to be able to SHOW and DEMO it which I've never seen done. Some TALK about it, but never show.

In the photo below you still see the seventh red notch, representing **14.3% of the waste** but only 10% of the original fuel, that we are going to salvage and automatically turn to a much higher percent in fuel economy, due to the great imbalance: WASTE vs. USEFUL OUTPUT. This statement will become clear in the next step, bear with me.

In the second and last step shown below, you move the machine a single notch in the direction shown by the blue arrow (note: when you build the machine, you may add stoppers to make for easy demonstration; I did not make any stoppers and just trained myself to move the parts as shown). **That's all the action, one notch moved.** This action covers the RED notch marked "7" and reveals the GREEN notch marked "4". From here you just need to understand – AND EXPLAIN – the resulting math: the 10% we mentioned in Step 1 have turned AUTOMATICALLY AND INEVITABLY into 33% gain in fuel economy.

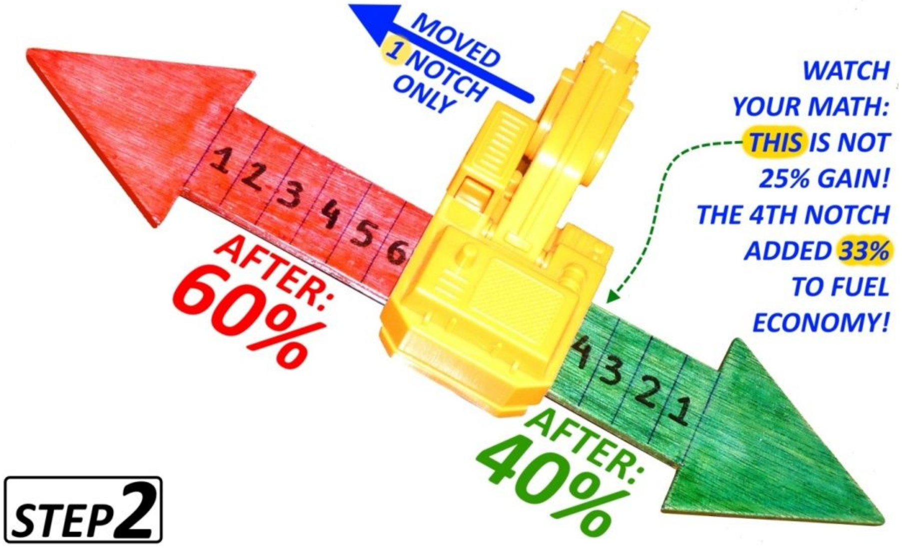

The overall understanding that you bring about in the viewer's mind is this:

33% (in this example) of fuel gain is **NOT OUT OF THIN AIR** but an inevitable result of a MUCH SMALLER reduction of waste (engine/boiler/turbine inefficiencies), less than half in this example. The next page has a self-explanatory poster that demonstrates this principle with graphics). You can copy it or order prints from the link below (footer of page). I created the poster without copyright claims so you're welcome to use and even sell prints. If you need the original file just email me.

THE SECRET SOURCE OF FREE ENERGY

Created by Ozzie Freedom, July 2015

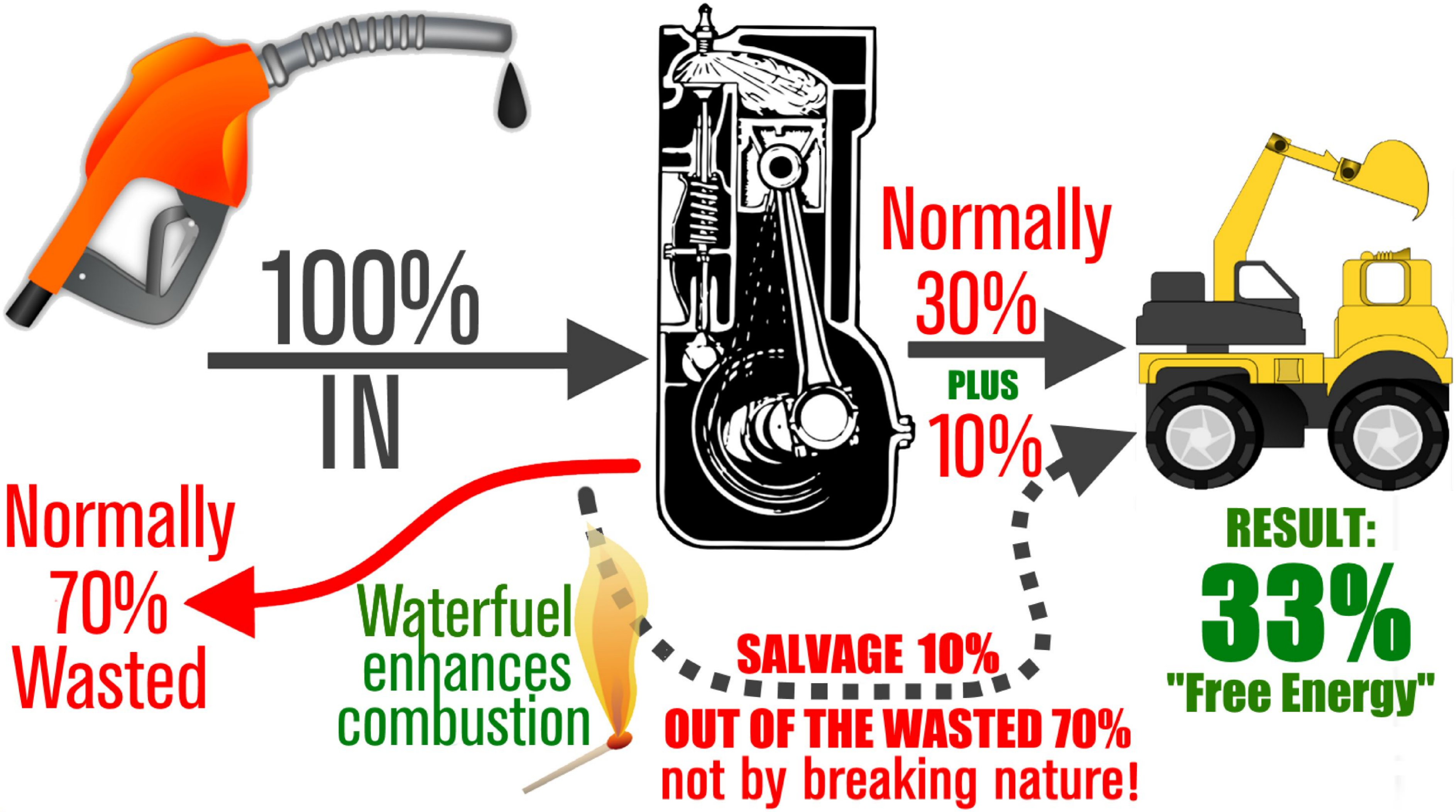

100% IN

Normally 30%

PLUS

10%

Normally 70% Wasted

Waterfuel enhances combustion

SALVAGE 10%
OUT OF THE WASTED 70%
not by breaking nature!

RESULT:
33%
"Free Energy"

Ignorance Killer [C]: "Light Bulbs – Miracle Energy or Bad Math???"

Here's an example that you can easily relate to, and use to show others, about how light bulbs differ energetically. How did bulb makers all of a sudden "multiply" the energy output of light bulbs when they went CFL[17]? And then, years down the road, did they really "multiple" the energy output once again when they went LED? Is this possible? Maybe it's nothing but BAD MATH???

The table below compares the REAL efficiency of the five most popular household sizes for each type.

	Incandescent	**CFL**	**LED**
			
SAME UNITS	40 Watt / 450 Lumens = 0.0889 Watt/Lumens	9-13 Watt / 450 = 0.049 Watt/Lumens	4-5 Watt / 450 Lumens = 0.01 Watt/Lumens
	60 / 800 = 0.075	13-15 / 800 = 0.035	6-8 / 800 = 0.00875
	75 / 1100 = 0.068182	18-25 / 1100 = 0.0391	9-13 / 1100 = 0.01
	100 / 1600 0.0625	22-30 / 1600 = 0.0331	16-20 / 600 = 0.01125
	150 / 2600 = 0.0577	30-55 / 2600 = 0.0327	25-28 / 2600 = 0.020385
	AVERAGES:		
	14.1844 Lumens/Watt	26.469 Lumens/Watt	83.33 Lumens/Watt
	0.0705 Watt to produce 1 Lumen	0.03778 Watt to produce 1 Lumen	0.012 Watt to produce 1 Lumen
BAD MATH	**Assumed 100% by those who know little Physics**	**87% "gained" i.e. 186.6% of traditional**	**1318% "gained"**
SIMPLE TRUTH	**95% wasted**	**"Only" 91% wasted**	**"Only" 71% wasted**

---

[17] CFL: Compact Fluorescent Light.

As you can see, what people normally call "100 Watt (incandescent) light bulb" is actually two products in one: (1) a 5-Watt light bulb, and (2) **a 95-Watt heater;** no kidding – you know they've been used for ages as heaters for chicken houses, preventing engines from freezing and other heating uses, both professional and at home.

So there you have it: incandescent bulbs with their 95% wasted energy, through fluorescent bulbs with their 91% waste and down to the latest wonder – LED bulbs with "only" 71% waste. Once the tech goes down to 0.5% waste, only then will the efficiency truly shine. There's still a long way to go from 71% to 0.5%, but that's not the point. If you follow the math, it simply shows that the NON-WASTED energy, the actual light output, gained an extra 87% for CFL and then an "astonishing" extra 1,318% for LED – which is not astonishing at all once you realize that today we're still at a level of 71% waste. So the next wonder device will not be much of a wonder. Not in terms of "something out of nothing" but in terms of "we should have done this a long time ago"…

The purpose of this demo is to relate to everyday household technologies.

Build a Demo

COMPONENTS: You'll need a flexible tape measure and a printout of the table given above. I added an old burnt bulb and marked it "100W" for clarity; it's not a vital part.

How to Show it

This demonstration has no steps and the setup is quite simple: spread the parts on the table as shown below. The center of "Incandescent Bulb" is more or less at the "95" point of the tape measure, signifying its 95% energy waste. The "CFL" data is more or less near the "91" point and the "LED" part is positioned at "71" of the tape.

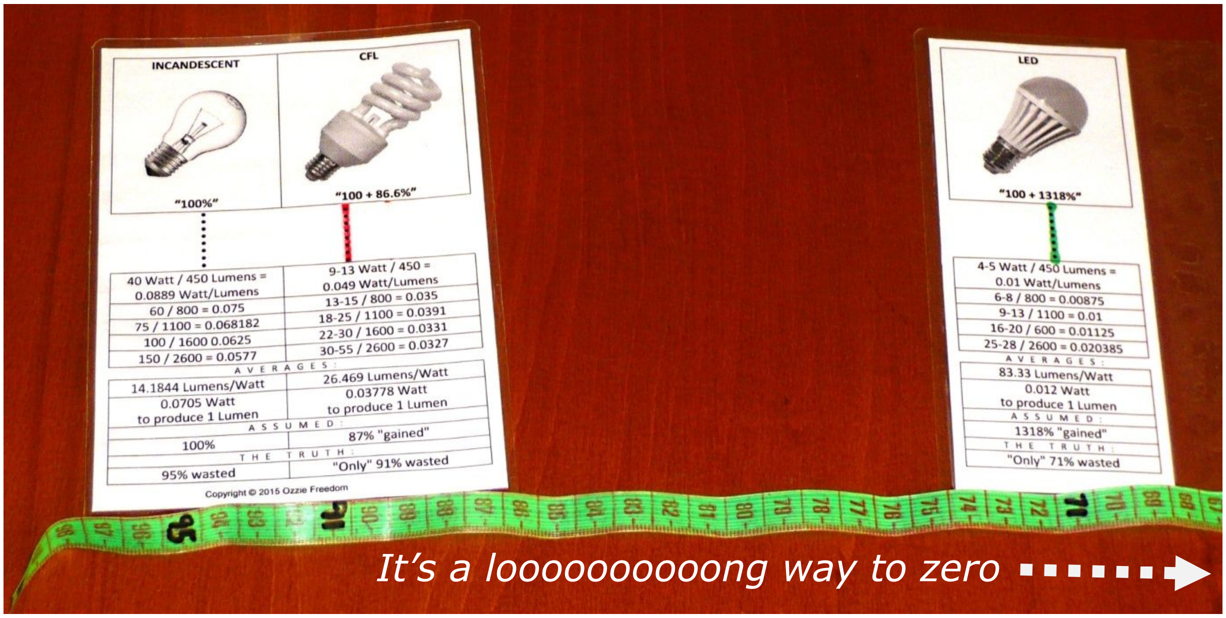

INCANDESCENT	CFL
"100%"	"100 + 86.6%"
40 Watt / 450 Lumens = 0.0889 Watt/Lumens	9-13 Watt / 450 = 0.049 Watt/Lumens
60 / 800 = 0.075	13-15 / 800 = 0.035
75 / 1100 = 0.068182	18-25 / 1100 = 0.0391
100 / 1600 0.0625	22-30 / 1600 = 0.0331
150 / 2600 = 0.0577	30-55 / 2600 = 0.0327
AVERAGES:	
14.1844 Lumens/Watt	26.469 Lumens/Watt
0.0705 Watt to produce 1 Lumen	0.03778 Watt to produce 1 Lumen
ASSUMED:	
100%	87% "gained"
THE TRUTH:	
95% wasted	"Only" 91% wasted

Copyright © 2015 Ozzie Freedom

LED
"100 + 1318%"
4-5 Watt / 450 Lumens = 0.01 Watt/Lumens
6-8 / 800 = 0.00875
9-13 / 1100 = 0.01
16-20 / 600 = 0.01125
25-28 / 2600 = 0.020385
AVERAGES:
83.33 Lumens/Watt
0.012 Watt to produce 1 Lumen
ASSUMED:
1318% "gained"
THE TRUTH:
"Only" 71% wasted

It's a loooooooooong way to zero

The math now becomes VISIBLE. It’s easy to see that CFL lights were not such a great improvement, and definitely not “energy from nothing” but a simple reduction of waste. The LED, however, while a nice move in the right direction, is immediately caught naked under the spotlight, because there is SO MUCH MORE TAPE left laying to the right (not fully shown in the photo). There is still a long way to go! To be exact, a long 71% way to go. And the next miracle light will have to deal with that.

Why is this Demo Useful?

It relates to Waterfuel, to misunderstandings regarding the source of energy gain. Those who haven’t learned the physics of the tech assume that their everyday technology is the 100% standard, thereby when seeing gain that ACTUALLY COMES FROM REDUCED WASTE they believe it comes from nowhere, therefore impossible, or inaccurate measurement – or deliberate hoax. This demo exposes the fact that some “advanced” household technologies are in fact PRIMITIVE in terms of energy.

Ignorance Killer [D]: This book

What if you use these demonstrations to show that waste energy is a goldmine, and the valid question arises: *“OK, but who says that WATERFUEL is any good for doing that?”* Well, this is where this book as a whole falls into its destined place. Use the data. Show the diversity and the sheer volume of data, show how many validations from scientists across the world including Government officials such as Patent/energy/space agencies. For some people, it’s all they need before they reach for actual products and/or participation.

Ignorance Killer [E]: How to explain Over-Unity

This aims lower than the above methods because the hardest to explain is over-unity. Now if you know physics then this over-unity business is very, very simple; over-unity is where you get MORE ENERGY OUT of a system THAN YOU HAVE INVESTED, and the reason is SIMPLY – I cannot stress it enough – **SIMPLY** because the system gathers energy from the environment. When you have someone who does not understand basic physics (even if he thinks he knows a whole lot, which is even harder) and you start to explain about particles they have never seen and never will, what are you doing? You’re working hard with no results because you’ve started way too high! Way too high.

Come down a few notches. Quite a few notches in most cases and even more so when you’re dealing with educated people. So how DO you get the idea across?

1) Let them read Chapter 35 (Sinbad). Read it to them if they feel “too smart for silly fables”.
2) Do not jump into explaining physics! Your next step is to ask them to look around and find examples where the principle used by Sinbad can be seen in real life. Things that are real TO THEM, not to you.

3) Now you need patience because the idea needs to sink in and depending on the depth of ignorance, this step may take anything from a minute to a lifetime. Repeat steps 1-2, keep referring to the story and ask them to look again. Give them time to get used to the idea. And if you're tired of waiting for the result then maybe you need the next method.

Ignorance Killer [F]: *MASSIVE ACTION* → Win!

Now we're moving deeper into the rabbit hole of ignorance – where some people are so blind that they refuse to look at whatever you say or demonstrate. There's no known way to shove truth down a blind man's throat; all that "mind control" techniques can do is create robots.

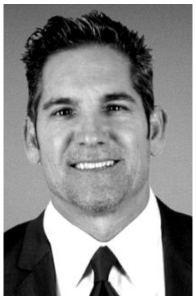

The solution is to do whatever you can with these tools, and if none works follow the example of giants like Elon ← Musk and Grant Cardone (www.CardoneUniversity.com) → and ignore ALL the negative voices no matter where they come from, whether your next door neighbor or the President or anybody in between. This is not "let's make the problem vanish by ignoring it" – but actually DOING SOMETHING ABOUT THE PROBLEM.

This ignorance killer works on a much, much lower level than all the above. It handles the individual (not groups or institutions but the individual human being) who refuses to look because he has not the faintest clue that he's blind. This technique requires MASSIVE ACTION yet it's very simple and has only two steps:

1) Ignore any and all negative voices. Don't prove them wrong. Waste neither a minute of your precious time nor an iota of your attention and intelligence – because you'll need them in the next step.

2) Instead, focus on WINNING. Do everything necessary to make your goal come true. Mine, for example, is to 37X the entire Waterfuel industry and yours may be different, but if you're like me then take whatever necessary action to make your part a HUGE GLARING WIN that cannot be ignored.

You see where this is going? When you win big time, the blind may still not understand what they're looking at, but they dare not attack a winner. How many people do you know who can explain EXACTLY how Elon's Space-X rocket goes and comes back? I guess, not many, but they don't argue with success.

Now we're left with those **FEW** who still attack winners. And these are not blind individuals but mad dogs, insane people who are fortunately **FEW** in numbers, so they are not the subject of this chapter at all. However, the same two steps outlined above will serve as a workable solution – ignore them and focus on three things: win, win and win some more.

Use this story…

For who knows how many millions of years, Man's main problem wasn't bad animals or bad people or oil companies or government or anything like that.

Our worst enemy has always been stupidity, blindness, or in other words our inability to see things as they are.

Now if, hypothetically, some petroleum company executive sat behind his big desk or in a conference room with other energy lords, and they talked it over and concluded that Waterfuel was the enemy, then the truth of the matter would be as it always has been: ***they got the FACTS all messed up!!!***

Let me skip the graphs and science for a minute, and demonstrate this point using a little true story.

One of my students got the idea that Waterfuel is not rocket science, and set out to build Waterfuel devices based in part on my books. At one point, I believe it was in the winter of 2008, he was invited to perform an experiment in one oil-drilling site in the State of Texas.

The target was the large generator providing power to the drill. I'm no expert on oil drilling, but as far as I remember that oil drill had to keep on digging and drilling for ten days straight, day and night. The continual drilling is one of several measures taken to prevent the hole from collapsing inward and destroying itself (and seizing on the drill bit).

This is a joke, not a call to violence!

Trying to negicate with an executive at 725 Figeroa, downtown Los Angeles

The generator providing power to the drilling machine was a very large Diesel engine; I think it was 19.1 liter, with thirst for no less than 72 gallons of Diesel fuel PER HOUR.

Do the math for 10 days – it's 17,280 gallons – costing a small fortune even if you are in the oil business!

When my student came with his team to the actual oil field, they had some surprises. The voltage they've been promised, 24 volts, was measured to be only 19 volts. So the Electrolyzer they have brought had less than ideal power. And then there were some other non-optimal conditions, yet he was determined to install the Electrolyzer and test it anyway. The Electrolyzer was connected to the air intake of the generator and supplied it with HHO (see Glossary) in order to boost fuel economy. They conducted several test runs and measured fuel economy. The results were averaged from all runs and it was found that the fuel economy of the generator went up by 11.11% – I guess that's not bad for the first try under less-than-perfect conditions.

Now calculate how many gallons they could have saved if the entire drilling session was done with HHO. My calculation shows a savings of 1,919 gallons. If it only costs them half of what I'm paying in California for Diesel fuel, this means saving **$3,000!**

For one drilling session! How much could they save in a year in just ONE drilling site? How much in a year in all their sites across Texas? Who knows… but it far exceeds the costs of simple Electrolyzers, installation and a little bit of water, don't you think?

This is an ongoing story, but you can see where it's heading: Waterfuel should be considered **FRIEND not FOE** of every petroleum company, whether they want to use it to assist drilling or refining or transportation. Better yet, why not using Waterfuel for all scenarios?

Therefore, ALL oil companies whether big or small should see a mutual interest in the development of Waterfuel in all its applications, because:

1) We still need and use their gasoline and Diesel fuel, as well as plastic and other byproducts of fossil fuel; Supplemental Waterfuel keeps them in business in a time when clients are bailing out for alternatives such as solar/wind/electric/bio.

2) They need to cut all costs and enhance profitability, now that they are facing inevitable competition from the Alternative Energy.

An open letter to you the oil company executive

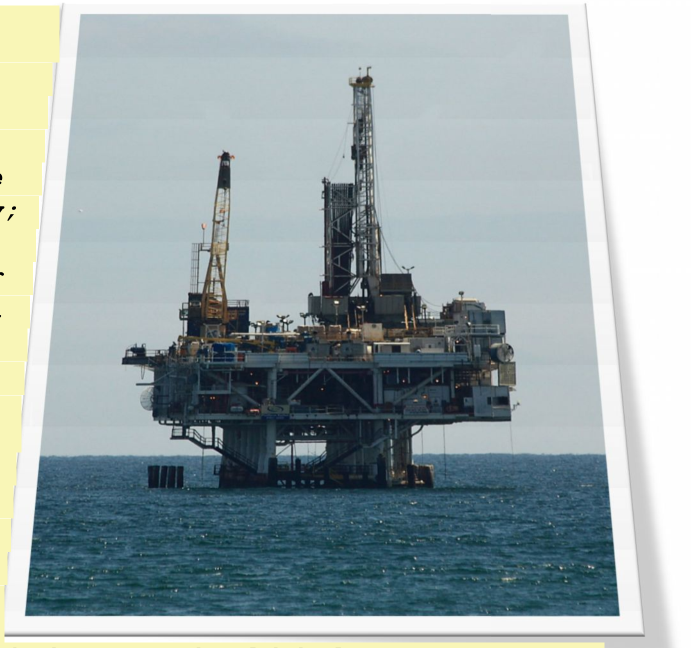

Dear Sir,

Say, are you an oil company executive reading this now? In light of the above story, I'd warmly recommend that you examine Waterfuel technology very closely; in fact, examine it with a magnifying glass. To enhance your business, all you need is a small shift in your point of view: WATERFUEL IS NOT YOUR ENEMY. PERIOD. Find that out.

I would like to see this book on your desk and on the desk of every other executive of every petrol manufacturing, refining and transportation company.

And we, I mean the Waterfuel industry, should help you increase production and transportation efficiency thus helping the environment as well.

Costs are not even a concern – I believe that the reduction in your pollution penalties should pay plenty for the best Waterfuel systems that money can buy.

No fear, no shame - just do it.

Sincerely,
Ozzie Freedom
Water4Gas.com
WaterfuelPro.com

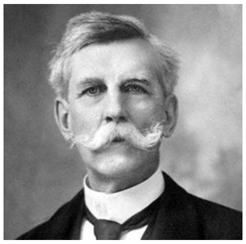

Oliver Wendell Holmes[18] said:

> “A man’s mind stretched by a new idea can never go back to its original dimensions.”

---

[18] Oliver Wendell Holmes Jr. (1841–1935) was an American jurist who served as an Associate Justice of the Supreme Court of the United States and as Acting Chief Justice of the United States. Noted for his long service, and his concise and vigorously expressed opinions. Holmes helped move American legal thinking towards Legal Realism, as summed up in his maxim: “The life of the law has not been logic; it has been experience.”

Chapter 5.

THEORY: Brown's Gas Overview

NOTE: this chapter is an overview. The following chapters will give you much more data from George Wiseman, Chris Eckman, Moray King and others about Brown's Gas, ***what it really is*** – and what it can do for you. *Based on International Patent App. WO2005/049051 and US Patent App. US2007/0104797 (both referring back to George Wiseman's books), Andrew Michrowski and Ali Can Yilmaz; edited and annotated by Ozzie.*

Overview

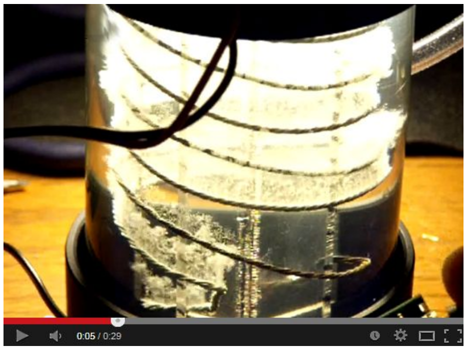

Canadian Waterfuel inventor and investigator George Wiseman of www.Eagle-Research.com explains that Brown's Gas is a mixed gas of hydrogen and oxygen, with a ratio of 2:1 by volume[19]. However, it is important to specify that it is CREATED BY ELECTROLYSIS OF WATER because research indicates that ***Brown's Gas has characteristics that cannot be achieved by simply mixing bottled hydrogen with bottled oxygen in that ratio***. The photo above is from a YouTube video showing a **Water4Gas** electrolyzer being fired up – and the white bubbles between the metal wires are the gas being produced.

It is thought that Brown's Gas also contains considerable water vapor ***and other energetic ingredients.*** Simply stated, electrolysis of water produces a hydrogen gas at the cathode (the negative voltage side) and an oxygen gas at the anode (the positive voltage side). These gases are captured at the same time without being separated OR STORED – ***AND IT'S DEFINITELY NOT "HYDROGEN"!***

Brown's Gas has several characteristic properties, ***unlike its constituent gases***, Wiseman says. The most noticeable property of Brown's Gas is implosion after ignition, because it first explodes then ***implodes to revert back to water.*** Wiseman says that it is for this reason that a Brown's Gas flame is known to have ultra-high temperature to an extent that can sublimate[20] tungsten – the metal with the highest melting point of all metals!

Andrew Michrowski (President of Planetary Association for Clean Energy, Inc.) says that ***when Brown's Gas is ignited, THE VOLUME IS REDUCED TO THE ORIGINAL VOLUME WATER***. If this is so, then it tells us right away that energy is pulled from the environment into the process, and ***NOT from burning hydrogen*** – the hydrogen does not burn and is not consumed.

---

[19] That's a simplified datum; much more on its composition in later chapters of this book.

[20] Change directly from solid to vapor without first melting.

Let's take this one step forward: if hydrogen is indeed not at all consumed by the process, then this is another indicator that ***BROWN'S GAS IS A COMBUSTION CATALYST RATHER THAN FUEL.*** Which renders pointless the argument of whether it is or isn't energy-efficient to "produce hydrogen" and then "burn it" because none of this seems to be happening. More on that is explained by Wiseman in Chapter 14.

Turkish scientist Ali Can Yilmaz (Institute of Natural and Applied Sciences, Çukurova University, Turkey) says in a recent study that Brown's gas has a plethora of ***unusual characteristics that seem to defy current chemistry.*** It has a cool flame about 130ºC yet is able to melt steel, brick and many other metals. It can be used for both SI[21] and CI[22] engines, he adds – and indeed proves good results with both engine types.

Earlier I quoted Wiseman saying its flame has ultra-high temperature – well that's when it touches the metal. It's weird but true to this gas. Wiseman, too, says that Brown's gas has a cool flame yet can fuse brick, steel, sublimate tungsten, glaze quarts, neutralize nuclear waste, fuse two dissimilar substances and many more feats. Wiseman has been making and selling Brown's Gas welding/cutting machines for many years now.

Brown's Gas burns with a ***clean flame***. It uses no atmospheric oxygen, and creates only pure water as its combustion product.

One liter of water produces about 1866 liters of gas.

According to the classic theory (the first theory), Brown's Gas was considered to be a simple mixed gas of hydrogen and oxygen generated by electrolysis of water, but that theory could not explain the special characteristics of Brown's Gas. Accordingly, new theories about the entity of Brown's Gas have been recently introduced.

Experimental results acquired to date show that a mixture of oxygen and hydrogen generated by a Brown's Gas generator has ***remarkably larger reactivity*** than an equal amount of another mixture of oxygen and hydrogen.

The second theory about Brown's Gas is that Brown's Gas is a mixture of diatomic[23] hydrogen/oxygen and monatomic[24] hydrogen/oxygen.

The recently published third theory is that electrolysis of water produces bubbles of a third gas IN BETWEEN a cathode and an anode, in addition to a molecular hydrogen gas at the cathode and a molecular oxygen gas at the anode. According to this third theory, it is thought that Brown's Gas is a special "water gas" in which the hydrogen gas, the oxygen gas, and the third gas bubbles are mixed, i.e., Brown's Gas is not steam but "electrically expanded water" – www.**eagle-research**.com/browngas/whatisbg/watergas.html

---

[21] SI: Spark Ignited.
[22] CI: Compression Ignited.
[23] Diatomic: Each molecule made up of two atoms.
[24] Monatomic: An element consisting of a single atom.

Known characteristics of Brown's Gas:

- ☐ Brown's Gas contains high energy, and in particular, generates a cold flame with a tremendous energy potential upon ignition.
- ☐ Brown's Gas is a special and highly efficient medium that transmits electrical energy to the atomic structure of a material and exhibits special effects that are often unobtainable by any other means.
- ☐ Brown's Gas is essentially easy to handle, is odorless, and is ***harmless to the human body even when inhaled***.
- ☐ Furthermore, Brown's Gas is lighter than air, diffuses rapidly in air, and has a high initial flammability limit, which makes it ***SAFER than other combustible gases*** for workers and for the environment.
- ☐ Due to these characteristics, Brown's Gas has received interest as a next generation fuel, in particular, as a clean fuel that produces no pollutants.
- ☐ Since Brown's gas has unusual characteristics that "seem to defy current chemistry" as Ali Can Yilmaz puts it, I expect new uses to be discovered in the near future.

More than Enough Names to Start a Party…

Brown's Gas contains H, H_2, O, O_2, H_2O (as water vapor) and a special sixth "structured" gas that has many names:

1. Professor Yull Brown called it **"Fluid Crystal"**
2. George Wiseman calls it **"Electrically Expanded Water" (ExW)**
3. Sven Erik calls it **"Exotic Hydrogen"**
4. Chris Eckman of Idaho State University calls it **"Orbital Expanded Plasma"**
5. Several scientists refer to **"Charged Water Gas Clusters"**
6. Professor Ruggero Santilli refers to **"Magnecules"** as opposed to "molecules" (see Chapter 7 below for definition and details… specifically, Santilli shows essential chemical differences between Brown's Gas and HHO[25]). Santilli also refers to **MagneGas** and **MagneHydrogen** as sub-species of Magnecules.

But the industry invented many other names for it:

7. **Brown's Gas** was named after Australian inventor Prof. Yull Brown in Korea it's

---

[25] Hydrogen-Hydrogen-Oxygen gas molecules – more about it later and in the Glossary.

called Brown Gas as you will see in some Korean Patents; in China it's called either Brown Gas, Brown's Gas, oxyhydrogen or HHO (see below).

8. The Waterfuel industry nowadays often refers to this gas as **HHO**, which is an abbreviation of **Hydrogen – Hydrogen – Oxygen.** In recent years the popular term HHO has finally made it into government vocabulary and now appears in US Patents. The image → shows the first page of Patent № 8,127,750 granted to Dennis J. Klein (Clearwater, Florida) in 2012. In 2011 Patent № 7,932,619 was granted to Fred M. Newcomer of Maine, USA, that mentions "HHO electrolysis factory" or "***HHO Factory***" and "***HHO land based facility***" in its claims.

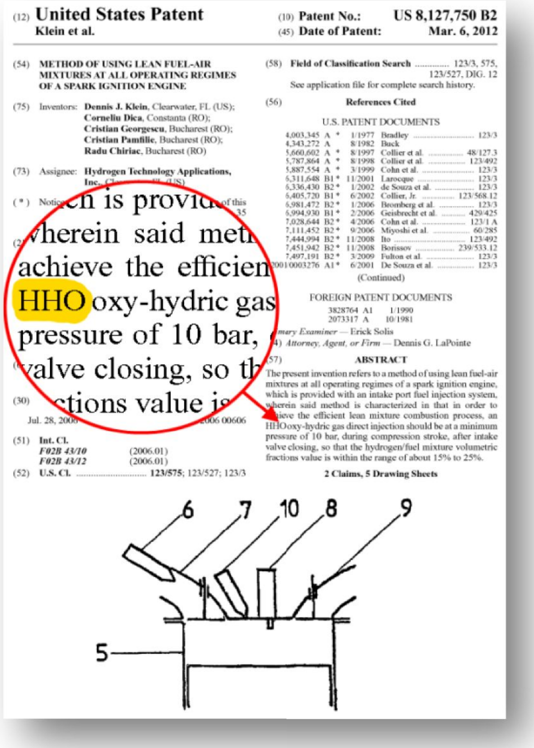

(12) **United States Patent**
Klein et al.

(10) **Patent No.:** **US 8,127,750 B2**
(45) **Date of Patent:** **Mar. 6, 2012**

(54) **METHOD OF USING LEAN FUEL-AIR MIXTURES AT ALL OPERATING REGIMES OF A SPARK IGNITION ENGINE**

(75) Inventors: **Dennis J. Klein**, Clearwater, FL (US); **Corneliu Dica**, Constanta (RO); **Cristian Georgescu**, Bucharest (RO); **Cristian Pamfilie**, Bucharest (RO); **Radu Chiriac**, Bucharest (RO)

(73) Assignee: **Hydrogen Technology Applications, Inc.**,

(*) Notice

(30)

Jul. 28, 2006

(51) **Int. Cl.**
F02B 43/10 (2006.01)
F02B 43/12 (2006.01)

(52) **U.S. Cl.** **123/575**; 123/527; 123/3

(58) **Field of Classification Search** .... 123/3, 575, 123/527, DIG. 12
See application file for complete search history.

(56) **References Cited**

U.S. PATENT DOCUMENTS

4,003,345 A *	1/1977	Bradley	....	123/3
4,343,272 A	8/1982	Buck		
5,660,602 A *	8/1997	Collier et al.	....	48/127.3
5,787,864 A *	8/1998	Collier et al.	....	123/492
5,887,554 A *	3/1999	Cohn et al.	....	123/3
6,311,648 B1 *	11/2001	Larocque	....	123/3
6,336,430 B2 *	1/2002	de Souza et al.	....	123/3
6,405,720 B1 *	6/2002	Collier, Jr.	....	123/568.12
6,981,472 B2 *	1/2006	Bromberg et al.	....	123/3
6,994,930 B1 *	2/2006	Geisbrecht et al.	....	429/425
7,028,644 B2 *	4/2006	Cohn et al.	....	123/1 A
7,111,452 B2 *	9/2006	Miyoshi et al.	....	60/285
7,444,994 B2 *	11/2008	Ito	....	123/492
7,451,942 B2 *	11/2008	Borissov	....	239/533.12
7,497,191 B2 *	3/2009	Fulton et al.	....	123/3
2001/0003276 A1 *	6/2001	De Souza et al.	....	123/3

(Continued)

FOREIGN PATENT DOCUMENTS

3828764 A1	1/1990
2073317 A	10/1981

Primary Examiner — Erick Solis
(74) *Attorney, Agent, or Firm* — Dennis G. LaPointe

(57) **ABSTRACT**

The present invention refers to a method of using lean fuel-air mixtures at all operating regimes of a spark ignition engine, which is provided with an intake port fuel injection system, wherein said method is characterized in that in order to achieve the efficient lean mixture combustion process, an HHOoxy-hydric gas direct injection should be at a minimum pressure of 10 bar, during compression stroke, after intake valve closing, so that the hydrogen/fuel mixture volumetric fractions value is within the range of about 15% to 25%.

2 Claims, 5 Drawing Sheets

Speaking of Patents, Brown's Gas is described as KNOWN TECH in Patent № 8,101,051, granted in Jan. 2012 to Binglin Yang of Tokyo, Japan. Since Patents refer back and forth to each other, the use of these terms and realities is now spreading quickly. A longer list of Patents mentioning Brown's Gas, HHO or even both in the same context, is provided in Chapter 20 below.

9. **$H_2H_2O_2$** – used in some chemistry references and Patents (in Patent № US20120244485 they often call it **$H_2H_2O_2$ fuel**. Harder to pronounce than HHO but more chemically correct.

10. **Aquygen™** (trademark of Hydrogen Technology Applications, Inc.)

11. **Rhode's Gas** (named *after* inventor William A. Rhodes that preceded Brown)

12. **Common-Ducted Gas** (named so by Dr. William A. Rhodes himself)

13. **Oxy-Hydrogen** – first known use by Physics & Electrical Engineering Professor *Howard Monroe Raymond* (1872–1943) in **'Oxy-Hydrogen Welding'** published in ***1916*** by American Technical Society, Modern Shop Practice, Vol.1

14. **Hydro Nano Gas** or **HNG** (coined by Swedish inventor Sven Erik of HydroInfra Technologies, Sweden)

15. **Hydroxyhydrogen** or **SG Gas** (named after inventors Ted Suratt and Robinson Burroughs Gourley, Jr. of WIT International, Florida www.WaterIonTechnologies.com)

16. **Hydroxy Gas™** (trademark of Norman Robert Boyce)

17. **Hydroxyl** (uncommon but used a lot in official Patents)

18. **OxyHydrogen** (according to Wiseman: erroneously named by WikiPedia)

19. **Green Gas** (not to be confused with commercial "green gas" used for propelling airsoft guns); rare use

20. **Klein Gas** (named after American inventor Dennis Klein)

21. **Knallgas** (German: bang-gas)

22. **Ohmasa Gas** (named after Ryushin Ohmasa, president of Japan Techno, Inc.)

23. **Spirig Gas** (named after Swiss inventor Ernst Spirig)

24. **2HO** (rare and incorrect use as 2HO is Hydrogen Oxide) possibly refers to the gas "doubled up" structure → or maybe just trying to say "HHO". Confusing – don't use.

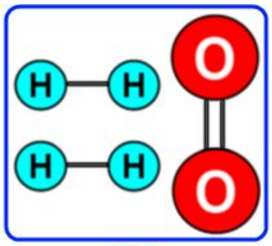

HHO

25. **Water-gas**, watergas, etc.

26. **Waterfuel** (I capitalize it nowadays, in a single word rather than Water-Fuel); please make sure when talking or writing to your client, student or audience – clarify whether you're talking about Brown's Gas specifically, or using the term **Waterfuel** in the broader sense – i.e., anything else water-to-energy, such as Water Cavitation (Chapter 16 and others), Cold Fusion (Chapter 28 and others) Schauberger (Chapter 31) and other tech to extract energy from water.

27. **Plasma ion gas** is a term used in US Patent № 9,341,112 (granted May 2016).

28. As you've seen above, George Wiseman and WIT International define the most active part of Brown's Gas **Electrically Expanded Water** (further explained in Chapter 14 below) which I think is very true and the most expressive of ***its true nature***. Simply stated, this gas we're talking about is obviously neither what we call "water" (liquid state) nor "ice" (solid state), which is obvious – but it's not "steam" either. I went to school and they told me that water had three states, and the world was simple. But now I know there's a FIFTH STATE OF WATER. So you may call it **Water in the 5th State** or you may call it **Electrically Expanded Water (ExW)** or you may call it by any of its other names. George Wiseman says that ExW is a FIFTH state of water (assuming EZ water described in 0 by Dr. Pollack to be the fourth state). ExW is an ionized gas, so it's quite literally a 'plasma' (cold plasma) which is different than EZ water which pretty much exists in liquid state. Plasma is only in a gaseous state."

But realize this, if you get just one thing out of this book, then realize that what we have here is WATER in another form. **It's Waterfuel, not hydrogen.** You'll find a detailed explanation by George Wiseman in Chapter 14 below, as well as the following publications to build up your familiarization with Brown's Gas theory/calculations:

- www.eagle-research.com/browngas/whatisbg/watergas.html
- www.eagle-research.com/browngas/whatisbg/whatis.php
- www.eagle-research.com/cms/faq/browns-gas
- **www.waterfuelconverters.com/Videos/** - 14 videos explaining Brown's gas
- www.hydroinfra.com/en/solutions/what-is-hng/
- http://wateriontechnologies.com/science.asp
- The theory/proof chapters of this book.

Applications of The Theory

What is "Supplemental Hydrogen"?

It means that you use hydrogen as a supplemental substance to regular fuel. Hydrogen-only cars are problematic: too dangerous if made or maintained improperly, and lack the infrastructure of hydrogen supply (i.e., in many regions of the world you couldn't refuel your hydrogen-only vehicle even if you had one).

Also, like I stated many times before, the "drive your car on water" dream is still futuristic. I believe that in the near future we will start to see extreme-mileage cars being commercially available, and lightweight water-assisted vehicles sparking the "drive your car on water" dream. However, from a moped driving on water to a 750-ton mining truck (loaded) powered by water only, or propelling a gigantic 825,000-ton ship through rough seas – the distance is obvious.

The middle road is **SUPPLEMENTAL HYDROGEN:** you take hydrogen, from whatever source (electrolysis being the most economical AND safe – but you can provide hydrogen from a compressed tank as well), and you supplement your existing fuel: gasoline, Diesel fuel, bio fuel or recycled veggie oil, alcohol (as is common in Brazil), natural gas, etc. The reason is that, as has been found in many experiments and developments shown in this book, supplemental hydrogen helps combustion effectively and economically.

In this regard, how different are hydrogen and Brown's Gas? Some would say they are pretty much the same thing, some others (including my friends of the Waterfuel industry) would feel that there's a world of difference between the two. If you ask me, and if you read this book completely, you may eventually agree with me that both of these viewpoints are right and that it only depends on your perspective and your client's needs.

As I said, this book does not make an absolute separation or absolute distinction between hydrogen from source A or B or C, or its various combinations with oxygen, atmospheric air, natural gas, etc. Why? Because it's not the focal point. On the contrary, it comes to show you that there's more than one way to get there; these are sister technologies with a common goal: less fuel, less pollution, less noise, less maintenance.

What is 'Hydrogen-From-Water'? And what's the difference between this and 'Hydrogen-On-Demand'?

While Supplemental Hydrogen may be supplied from a tank of pressurized hydrogen, Supplemental Hydrogen from water comes **from water – a water tank,** and the hydrogen is usually being produced FROM WATER ***on board the vehicle/generator***. Therefore it is often called Hydrogen-On-Demand, or HOD, but I've come to realize that this is an inaccurate term as ***we do not produce hydrogen*** – we produce **water in the forth state** which is far superior as you will see. But it is true that we produce it ***on-demand***.

So there you have it, some confusion in the terms, but as long as we understand the nuances, we can select the proper tech for the job at hand.

And here is the place to highlight the mistake that many nay-sayers are uttering against Hydrogen-From-Water and Waterfuel in general. They look at hydrogen production from water, and say that the energy you can gain from combusting (burning) hydrogen will "cost" you more energy to make than the energy contained in the hydrogen product. That is not necessarily true, as some advanced research (such as the US Patents granted to Stanley Meyer in 1986, 1989 and 1990 and the Russian Patents granted to P.M. Kanarev between 1998 and 2006) indicate that water splitting can be more efficient than what is demonstrated to us in high school labs.

BUT THAT'S NOT THE POINT!!! The point is that Hydrogen-From-Water is aimed at enhancing regular fossil/bio fuel/gas – and the energy does NOT come from the hydrogen all by itself – it must interact with regular fuel. Which is good news for oil companies. They don't have to close their business and go home. We still need them.

Therefore I classify **Hydrogen-From-Water** is a division of **Supplemental Hydrogen**.

Bottom line: Hydrogen-From-Water is one way to have Supplemental Hydrogen economically, either done in the back yard or by a professional company. More details on applications provided in Chapter 19.

The effects of such supplementation of fuel are concisely described in US Patent № 8544452 (Galvin and Kerstiens, 2013)*:*

> ***"The mixture of gases introduced under pressure into the intake manifold greatly increases vehicle mileage per gallon of fuel, improves fuel combustion at a low combustion temperature with reduced hydrocarbon emissions, reduces greenhouse gas emissions and reduces engine maintenance."***

Brown's Gas To Enhance Combustion

The last section of this chapter is an article written and published on www.eagle-research.com by George Wiseman of Eagle Research – the world's expert on Brown's Gas:

We first wrote the 'Water as Fuel, Book 1' to let people show what possibilities have been hidden by 'vested interest' for over 100 years. We are now taking EACH technology in the 'Water as Fuel, Book 1' and writing a specific manual that tells you exactly how to apply it to your vehicle (and home). So far we have the 'HyZor Technology' Manual and the 'Water Injection' Manual.

The HyZor Technology is 'state of the art' onboard electrolyzer technology, there is nothing more practical out there. I hear of people that are trying to make 'onboard' electrolyzers work. All of them need to upgrade to the HyZor Technology. Most of them won't copy the HyZor, because they want to patent and the HyZor is public domain… Too Bad and good luck to them :)))

In addition to making a superior electrolyzer (water splitter) in the HyZor design, we tell you how to reduce the amount of electricity you use to make the gas. That's why we call the Manual "HyZor Technology".

The power supply is vitally important because you are using engine energy (fuel) to make the electricity that makes the gas. Generally, for every watt of electricity that the alternator produces, you had to use 5 watts worth of fuel. So the combustion needs to be significantly improved to get any fuel gain. The HyZor uses super-efficient electrolysis (using a technique independently tested at 98% efficient) combined with innovative, efficient, practical power supply options. For most applications, the HyZor produces ***between 5% and 50% fuel savings.***

The HyZor makes Brown's Gas from water, and then uses the Brown's Gas to enhance combustion, specifically in vehicles. It is simple and straightforward to build, install and operate.

Then, once you have the HyZor installed, the Brown's Gas not only significantly enhances combustion, it acts as a catalyst to allow you to replace up to 50% of your fuel with water, with no significant performance loss. The 'Water Injection' book tells you how. For more information on our fuel saver recommendations see: **www.eagle-research.com/cms/faq/fuel-savers-general**

Other Interesting Qualities of Brown's Gas!

When you try to melt materials like rock, ceramic and brick, the material changes characteristics, going like a fused glass. If you continue to apply Brown's Gas, the various materials will either melt or vaporize till you have only a pure form left. This resulting material has unique characteristics that its original form did not. Example: It is very much harder. If you keep heating this with Brown's Gas, it will vaporize too.

Also, it's been discovered that when Brown's Gas reforms into water, it is NEW WATER and has some very unique characteristics. It seems that water contains vast amounts of life energy and information, which is erased when it is split apart and re-formed. This new water can be programmed to give super-health to those drinking it, plants too. And there is some evidence to show that new water can be made into solids that are not water; further experiments to this 'transmutation' need to be done.

INCOMPLETE List of Brown's Gas Applications

This list is incomplete because "new diverse uses for Brown's Gas are being discovered every day!" says George Wiseman of Eagle-Research Ltd. They are listed by ABC rather than by importance or "seniority" because who's to say which of these applications is more vital to our safety, environment and quality of life. Source: http://www.watertorch.com/application/applic1.html

Some Applications for Brown's Gas

1. Adhesive Drying
2. Annealing[26]
3. Brazing
4. Cable Stripping
5. Casting (die and investment)
6. Cutting
7. Creating Semiprecious stones (example: manufacture Rubies)
8. Desalinate water
9. Drilling
10. Energy storage
11. Enhanced fossil fuel combustion (internal and external)
12. Epoxy Curing
13. Flame cutting
    a. Directly cuts thin metal, plastic sheets, hard rods, hard fibers
    b. Adding oxygen
14. Flame drilling
15. Flame polishing
    a. Flame polishing of glass, plastic, quartz and ceramics
16. Gouging[27]
17. Heat Shrinking
18. Molding with heat
19. Neutralization of radioactive waste
20. Ore/Mineral-Refining, Separation and Manufacture
21. Plasma Spray
22. Preheating
23. Pressure/vacuum pump
    a. Freeze drying
    b. Distillation
24. Replace industrial torch gasses:
25. Sintering[28]
26. Soldering (all types)
27. Tempering
28. Toxic waste neutralization
29. Underwater cutting and heating
30. Welding
    a. Precious metals, quartz, copper, aluminum, glass, wax, cast iron, plastics…

Let me add a few more from my own research: (~Ozzie)

31. Room/office heating
32. Quicker and SAFER cooking
33. Boilers and boiler rooms
34. Carbon cleaning – shop/mobile service
35. Microturbines: Waterfuel-Assisted Microturbine (WAM) hybrids
36. Pharmaceutical & cosmetics – ampoule processing
37. Saving on Carbon Tax and other pollution penalties / threats of shutdown.

---

[26] Softening

[27] To pierce or perforate

[28] Compacting by heat without liquefaction

Important Videos about Brown’s Gas

Brown’s Gas (HHO) Three Phases of Combustion

https://www.youtube.com/watch?v=-9EmgSowldw

DESCRIPTION BY GEORGE WISEMAN: A quick video to demonstrate the combustible heavier than air constituent of BG (HHO) and the three phases of combustion; explosion, steam/pressure, condensation/vacuum. This video demonstrates:

1. How I use water displacement to assure that the bottles contain nothing but pure Brown’s Gas at United States – Standard Ambient Temperature and Pressure (US-SATP).

2. That Brown’s Gas (HHO) contains combustible heavier than air constituent(s) by showing, after as long as 10 minutes, an upright open bottle still contains a combustible gas.

Hydrogen is MUCH lighter than air and escapes any open bottle in seconds. Ask any scientist how long hydrogen would remain in an top-open bottle. The hydrogen escapes at least as quickly as the bottle initially fills with water.

The reason I use a bottle with a narrow neck, for this demonstration, is to slow down the diffusion of air into the bottle (air that mixes with and gradually carries away the heavier than air gasses) not to slow down the escape of the hydrogen.

3. You can see the ‘ring of fire’ that I’ve described in the past. This demonstrates not only a ‘rolling donut’ of flame but that ‘open air’ combustion of these ‘heavier than air’ constituents is fairly slow; not the detonation you get from a US-SATP stoichiometric mixture of hydrogen and oxygen (one of the most powerful explosions short of nuclear).

See the movie ‘OutBreak’ with Dustin Hoffman for examples of hydrogen gas bombs.

4. See that ‘closed bottle’ combustion of the ‘heavier than air’ components results in a ‘ping’ (mostly implosion instead of a BANG explosion) and the resulting (steam and water vapor) gases condense to water.

My theory is that Brown's Gas also contains a special form of water that I call 'Electrically Expanded Water' (ExW). This form of water would normally be lighter than air BUT it acts like a 'glue' to allow additional hydrogen and oxygen atoms to cluster into what Ruggero Santilli calls 'magnecules', which are heavier than air. The ER50 allows you to demonstrate this combustible constituent of BG (HHO).

5. That a pop bottle can contain the pressures and temperatures resulting from a pure BG explosion, when the initial BG is at US-SATP.

6. That there are three phases of BG (HHO) combustion;

1. explosion,
2. steam/pressure,
3. condensation/vacuum

Knowing how the characteristics of these three phases of combustion helps to design fun and practical applications for Brown's Gas. Like 'fireworks' or bottle rocket fuel or water bottle rocket canon fuel or fuel for internal combustion...

Currently I'm participating in a collaboration to use BG as a fuel for a pistonless water pump. http://www.eagle-research.com/cms/node/3957?a=5
You need to really understand BG combustion characteristics to design a pump that efficiently uses BG as a fuel.

A 90-minute lecture by George Wiseman at the 2007 Nexus Conference, Australia:

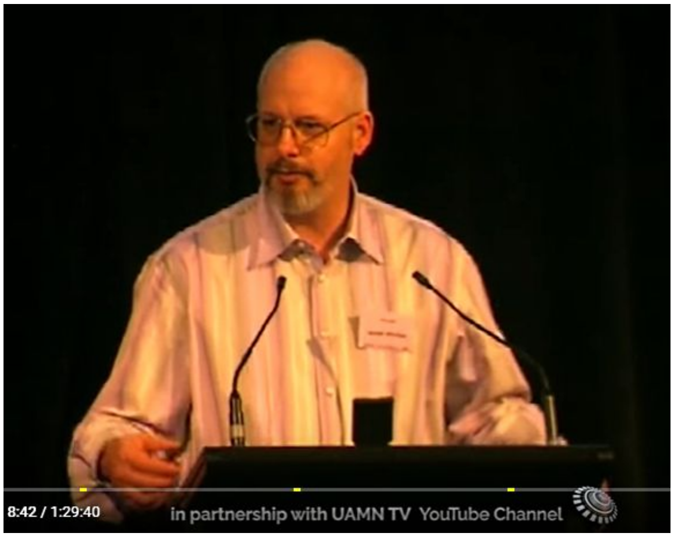

https://www.youtube.com/watch?v=_1iq8XnoMxU

In that lecture Wiseman provided much vital data about the applications, characteristics and politics of Brown's Gas. In the next pages you can read the transcript of the lecture.

The Amazing Brown's Gas

Presentation at the NEXUS Conference, Australia 2007
by George Wiseman

Here are some highlights, marked by minutes into the video; watch this lecture several times over to get better understanding and ability to apply to your R&D or scientific study.

In the introduction given by Mr. Duncan Roads, Editor of NEXUS Magazine, he edified George Wiseman as the leading researcher and developer of Brown's Gas technology. He started by telling about the adventures that Bulgarian-born Yull Brown went through when he came to Australia, then to China and eventually to Canada.

George Wiseman:

[7:30] "Tesla is my hero. --- Tesla said: ***'I worked so hard to build it simple – why do you seek to complicate it?'*** And that's essentially what I do."

[8:45] "…the machines that we have are three times more efficient than Yull Brown's machines originally were." He states that his technology (though improved) is a duplication of Brown's.

Definitions

[9:10] ***"Brown's gas is the entire mixture of combustible gas generated from a machine specifically designed to electrolyze water and NOT to separate the resulting gases."*** Goes by many names so people don't know they are the same gas. It has other important constituents such as water vapor; you wouldn't get the same effect if you mixed hydrogen (H_2 di-atomic hydrogen) and oxygen (O_2 di-atomic oxygen) from separate bottles. It has H_2 and O_2 but is ALSO contains MONATOMIC hydrogen and oxygen (H and O) which the scientific community says CANNOT POSSIBLY HAPPEN, yet spectroanalysis shows is indeed in the gas, every single time. About 1-5% monatomic hydrogen and about 5-10% monatomic oxygen (the higher the numbers the better QUALITY of Brown's Gas – they are not all high quality).

[11:10] Magnecules are the "magic" of Brown's Gas. discovered by Ruggero Santilli *[Chapter 7 of this book];* Yull Brown called it 'Fluid Crystal' (although he didn't have the technology to see it) so this has been known for decades. Wiseman named it 'Electrically Expanded Water' (ExW) but in the lecture he calls it Magnecules to give credit to Santilli for actually showing the proof.

Application Levels, from the high to low

[13:00] Application Level 1 – Commercialization; i.e. it's scientifically proven and out in the marketplace. Wiseman describes the ideal scene of such marketplace: "I really don't mind if there is "competition" out there; we really are just peers out there. At least that's the way that I see it. The more Brown's Gas machines – whether they're calling it Green Gas or HHO gas – there is out there, the more the technology gains respect of the public because then it starts to become 'which machine am I going to buy' instead of 'does it work' – you see the difference? It's good to have a good healthy environment of several different choices out there for people."

Application Level 1: Commercial

- Scientifically Proven
- Significant Commercial Value
- Multiple Manufacturers
- Application Apparatus Developed

NEXUS MAGAZINE in partnership with UAMN TV YouTube Channel

[14:25] In Level 2 which is 'Emerging' we have technologies that have been proven, have potential and interested manufacturers, but aren't in the marketplace yet.

Application Level 2: Emerging

- Independently Verified
- Potential Commercial Value
- Interested Manufacturers
- Developing Application Apparatus

[14:55] Application Level 3 – developing technologies which are on the level of rumors and speculation rather than repeatable duplication, normally working apparatus (later he gives examples from his own experience and others).

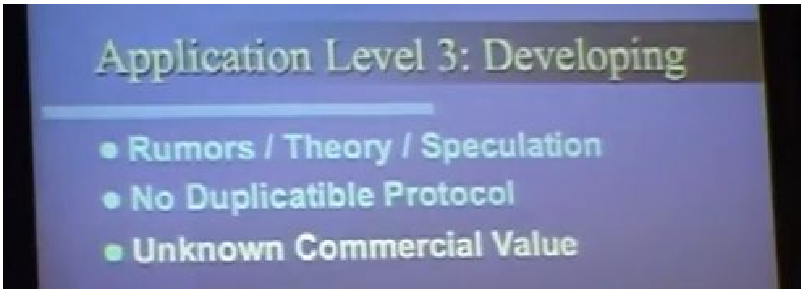

Application Level 3: Developing

- Rumors / Theory / Speculation
- No Duplicatible Protocol
- Unknown Commercial Value

TORCH FUEL

[15:33] The torch fuel gas has been commercial ever before Yull Brown left Australia. The machines we have now are far superior: can last for 20 years, can work on any power supply around the world; are "extremely robust, durable, simple, highly efficient machines that have been independently tested and proven to be over 98% energy efficient for electrolysis. Even NASA with high temperatures and high pressures and exotic materials is having trouble reaching those kinds of efficiencies."

With Brown's Gas we can replace any of the common torch gases used today like acetylene, propane, LPG, etc. And it can perform ANYTHING that you do with a regular torch, namely cutting, brazing, soldering, preheating – but do it faster, less expensively, cleaner and more precisely.

[17:30] With Brown's Gas we can make semi-precious materials such as moonstone and ruby, jewelry, magnificent art and more. It's also the SAFEST to work with and environmentally compatible.

[19:20] It is ELECTRICAL ENERGY doing the work, not thermal energy! Yes, it will heat the object – by delivering electrical energy via the flame directly into the molecular structure of the material – but the flame itself has hardly any radiant heat and stays the same low temperature the whole time. The flame is laser-like sharp and long because of the imploding effect, where the constituent gases retract back to water (thus imploding 1866 times which is the factor by which water expands during this type of electrolysis process).

[20:44] Eagle-Research has developed the world's most efficient and practical electrolyzer, the ER1200 WaterTorch™ shown in this slide:

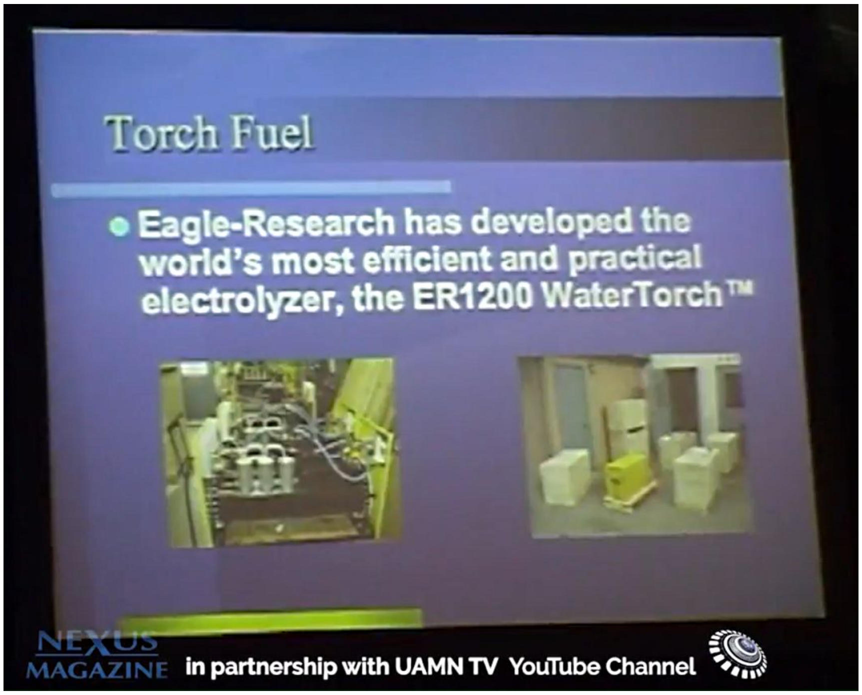

Torch Fuel

- Eagle-Research has developed the world's most efficient and practical electrolyzer, the ER1200 WaterTorch™

[21:00] Application: **ORE PROCESSING.** Playing the flame over the ore does something science says isn't possible – transmutation. In this we're putting energy directly into the molecules of the elements that are in that stone. For example: we took ore that had only 3% cooper (i.e., they could recover only 3% of metal out of the rock), we took the same rock and treated it with Brown's Gas and it turned into a 20% copper ore, which – anyone who knows about metallurgy – that's just phenomenal.

"The reason that this happened had to do with Mother Nature. All the materials that it took to make the cooper were already in the rock, but they haven't finished being copper, they haven't turned into copper yet. So if you 'cook' the rock with this gas, which puts this special energy into the molecular structure of the material, it finishes the process that Mother Nature already started, and more metal becomes available. What otherwise wasn't really metal yet, so the recovering process didn't get it, it couldn't get it. What this means, in the commercial sense, is that you can go back to tailing[29] ponds of copper mines, for example, have this type of copper, and process them and get three times more ore out of the stuff that's already on top of the ground (and already finely ground) than you did in the original mine."

Someone in the audience asked about gold; Wiseman answered that at that time he only had experience with cooper and platinum-based metals. He explained why it helped the platinum mine recover the metal whereas before they could not recover anything – the chemical processes were just too expensive. So it's very practical for a mining company to take electricity (which they can get relatively inexpensively) and water, and recover more materials without expensive processing.

[25:30] The "politically hot" subject of **neutralizing nuclear waste** from power plants is discussed. Wiseman states that according to his calculation, a single Brown's Gas machine is enough to neutralize all the nuclear waste coming out of a nuclear power plant on a regular basis, including the waste that's already been there. And since the machine lasts twenty years and is inexpensive, the process would be very economical compared to the highly expensive (and highly inefficient) treatment it gets today.

The resistance to this is based on two factors: (1) the revenues from those ineffective processes, basically just STORAGE that costs billions of dollars, and (2) he reveals what is little known, that the people who do NOT wish to neutralize the radioactivity think of these materials as ASSETS rather than LIABILITIES; they think they could at some point in the future use it as fuel (which would be hazardous and undesirable in our eyes but they still see it as valuable material).

Radioactive Neutralization

- Emerging
- Proven in China, USA and Canada
- 98% radioactivity reduction in seconds
- Simple, inexpensive, method using resources readily available.
- Eagle-Research can help radioactive experts design practical equipment.

---

[29] Tailing ponds are areas of refused mining tailings where the waterborne refuse material is pumped into a pond to allow the sedimentation (meaning separation) of solids from the water. The pond is generally impounded with a dam, and known as tailings impoundments or tailings dams.

98% of the radioactivity reduction in seconds. Simple, inexpensive, using resources already available. Proven in China, USA and especially in Canada – Chalk River Laboratories, Atomic Energy of Canada Limited (one of the world's largest research reactors) – where former chief engineer Mark Porringa decided on his own to test three Brown's Gas machines, and using the procedures that Yull Brown developed in China he found this particular application to work well (more info in Chapter 25).

[30:45] **External combustion.** Brown's Gas acts like a catalyst and assists immensely to break down the fuel molecules, reducing the energy that the flame needs to keep burning. Depending on the type of fuel, between 5% (with natural gas) and 50% (with Diesel type oils) of the fuel can be replaced with water. With coal you can gain even more due to the longer chains of carbons that need to be broken down before efficient combustion can occur. Wiseman states that this application has already been used in Japan and Korea for some period of time *[he didn't specify times and names but you can find them in the Patents listed and showcased in* Chapter 20 *and Chapter 21].*

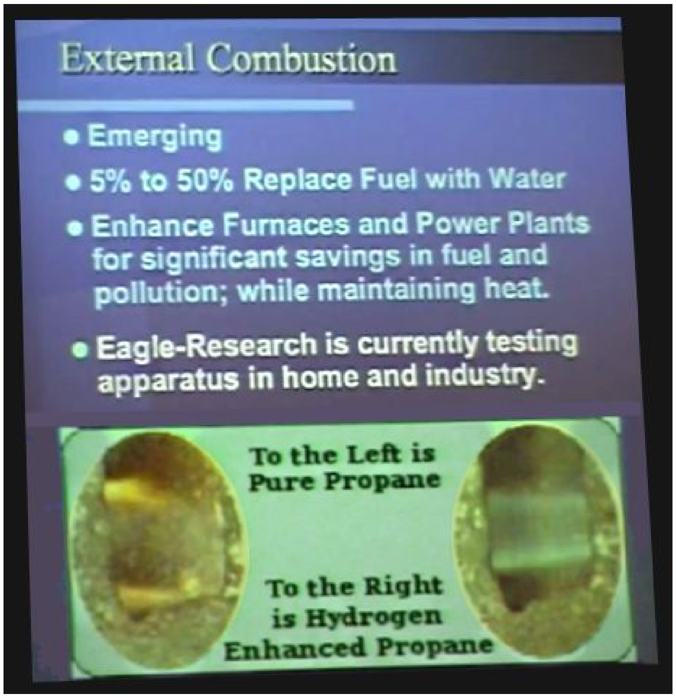

External Combustion

- Emerging
- 5% to 50% Replace Fuel with Water
- Enhance Furnaces and Power Plants for significant savings in fuel and pollution; while maintaining heat.
- Eagle-Research is currently testing apparatus in home and industry.

To the Left is Pure Propane

To the Right is Hydrogen Enhanced Propane

[35:00] For **INTERNAL COMBUSTION** (engines), it's absolutely proven, there are copious documents on how hydrogen, and more specifically Brown's Gas, enhances the carbon –based fuels such as propane, gasoline, Diesel, etc. Again, depending on the type of fuel, 5% to 50% of it can be replaced with water. It enhances ALL engines types, with reduced fuel and reduced pollution – while maintaining power and performance. And that's because the HEAT POTENTIAL was always there but much of that potential was being used to self-propagate the flame, and/or there was insufficient combustion, it wasn't burning fast enough.

Brown's Gas, Wiseman emphasizes at this point, is far more efficient for this application than hydrogen alone. [Proof: www.sciencedirect.com/science/article/pii/S0360319900000689]

[38:45] Wiseman describes his HyZor devices and explains the oxygen sensor and vehicle computer problem – and the EFIE solution – better than any explanation we had before; especially at [40:30] he explains why ***the knock sensors*** play an important role in balancing the air:fuel ratio.

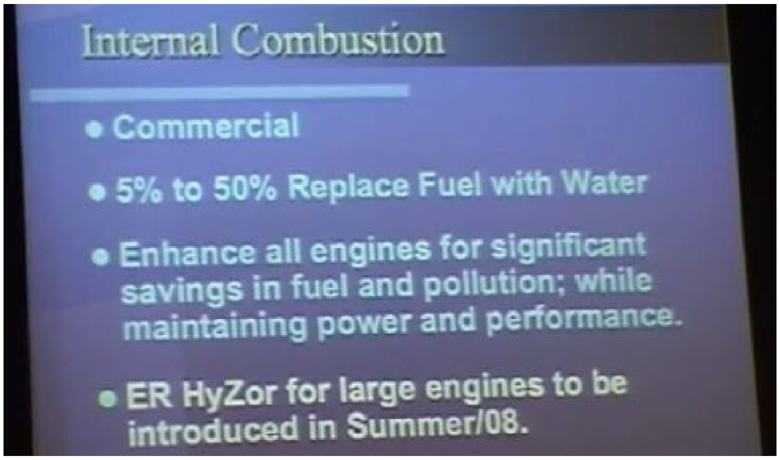
Internal Combustion

- Commercial
- 5% to 50% Replace Fuel with Water
- Enhance all engines for significant savings in fuel and pollution; while maintaining power and performance.
- ER HyZor for large engines to be introduced in Summer/08.

[46:15] Audience question: "If you use Brown's Gas in an internal combustion engine, does it affect engine's life?" Wiseman: "Absolutely!" [he laughs] "It affects it in the positive way. It virtually gets rid of carbon deposits and it improves the combustion so the carbon deposits don't form. It makes the combustion happen so much quicker that the exhaust temperatures going past the exhaust valves drop by hundreds of degrees."

[54:15] Wiseman tells how he sold information (at very low costs like $10) to a hundred thousand people so it has been quite profitable to help many people with Waterfuel applications; he reiterates his belief in the validity of the technology. "Water isn't as inert as science would have you believe, it's actually anything BUT inert; it's got to be the most energetic and lively substance on the planet."

[56:20] The story of Paul Zigouras.

[1:04:00] Wiseman explains the **application of Brown's Gas to health.** Water is known to be important to health, but it's actually the hydrogen which is vital and central to the many functions of the body; Brown's Gas is THE absolute best killer of free radicals.

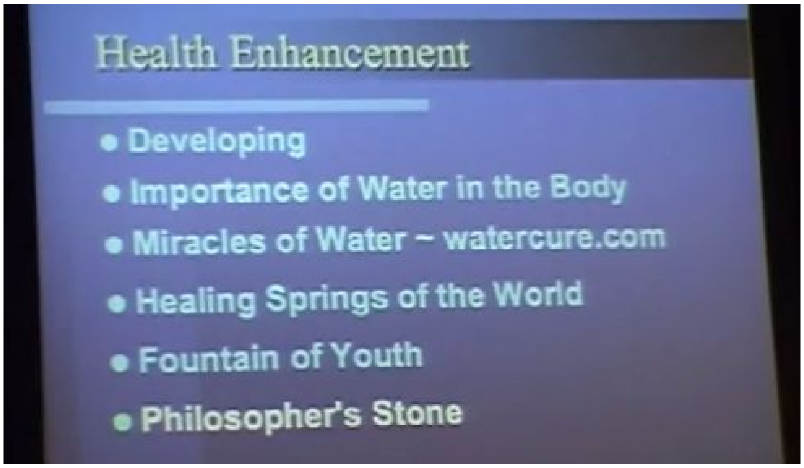
Health Enhancement

- Developing
- Importance of Water in the Body
- Miracles of Water ~ watercure.com
- Healing Springs of the World
- Fountain of Youth
- Philosopher's Stone

[1:07:45] Enhanced water can be enhanced in many different ways. Brown's Gas is the best; for example, its superb ability to lower the ORP (Oxidation Reduction Potential) of the water.

WATER MEMORY

[1:11:15] Masaru Emoto and Joseph Grander. Effect on plants and vegetable growth, and how they read the memory recorded in the water fed to them.

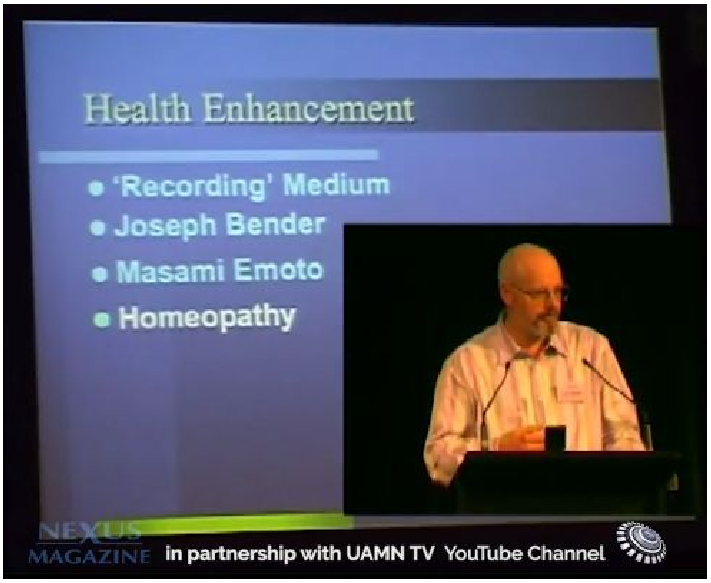

Health Enhancement

- 'Recording' Medium
- Joseph Bender
- Masami Emoto
- Homeopathy

[1:14:10] The story of how chiropractor Loyd Jacob started using Brown's Gas to treat his patients. Jon Lillace took Brown's Gas to his garden and chicken. A customer in France using it to mitigate his MS disease; another cured his skin cancer; Wiseman's mother healed a leg wound.

[1:22:00] ***Transmutation.*** The use of "new water" – the water created when the hydrogen and oxygen of Brown's Gas combines back to water.

CONCLUSION

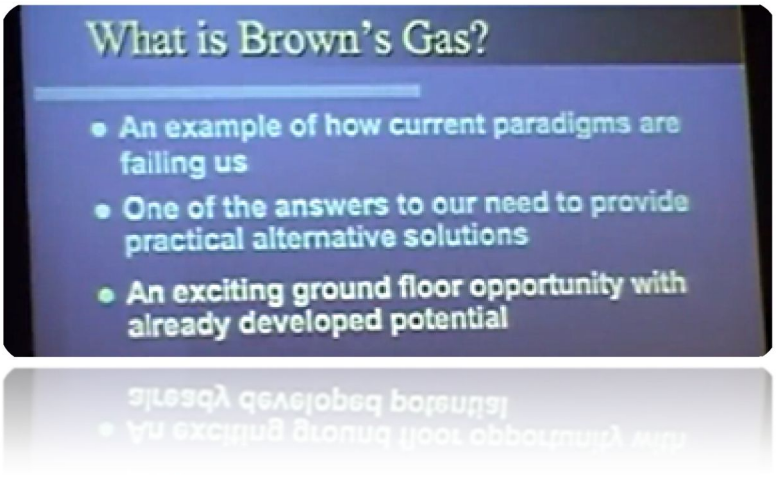

What is Brown's Gas?

- An example of how current paradigms are failing us
- One of the answers to our need to provide practical alternative solutions
- An exciting ground floor opportunity with already developed potential

---

I'd like to thank 'UAMN TV' YouTube channel for uploading this important lecture. Please keep it available for our readers and viewers. ~Ozzie, June 2017

Reference: proof that Brown's Gas is twice as effective than hydrogen alone

A 2001 study by the university of Windsor, Canada, confirms Wiseman's statement in the above lecture that Brown's Gas is far more effective than hydrogen for combustion enhancement. Scientists: C. Uykura, D.S.-K. Tinga and R.M. Barrona (Mechanical Engineering), P.F. Henshawb (Civil and Environmental Engineering). Download the complete study: www.sciencedirect.com/science/article/pii/S0360319900000689

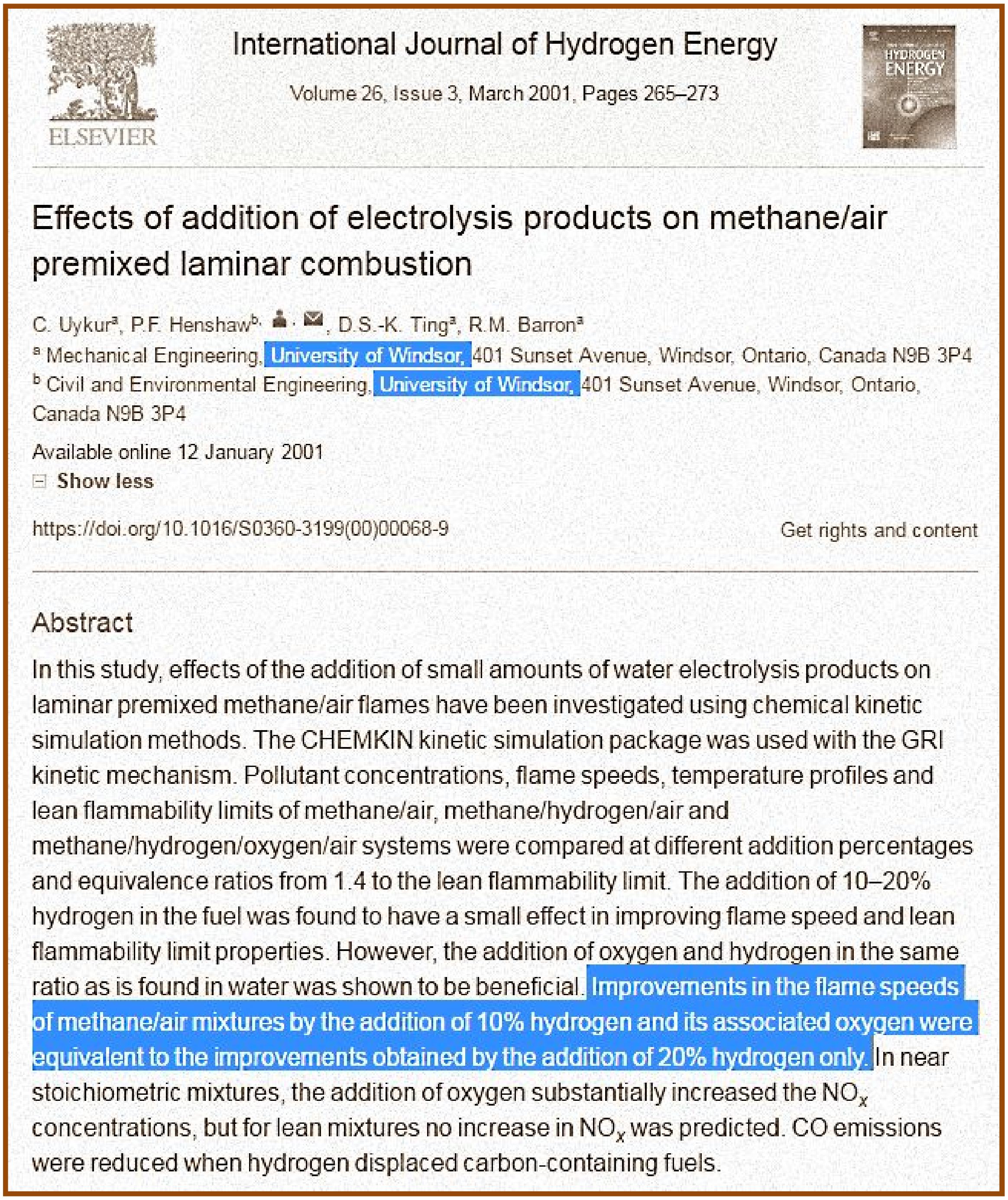

ELSEVIER

International Journal of Hydrogen Energy

Volume 26, Issue 3, March 2001, Pages 265–273

Effects of addition of electrolysis products on methane/air premixed laminar combustion

C. Uykur[a], P.F. Henshaw[b], D.S.-K. Ting[a], R.M. Barron[a]

[a] Mechanical Engineering, University of Windsor, 401 Sunset Avenue, Windsor, Ontario, Canada N9B 3P4

[b] Civil and Environmental Engineering, University of Windsor, 401 Sunset Avenue, Windsor, Ontario, Canada N9B 3P4

⊟ **Show less**

https://doi.org/10.1016/S0360-3199(00)00068-9

Get rights and content

Abstract

In this study, effects of the addition of small amounts of water electrolysis products on laminar premixed methane/air flames have been investigated using chemical kinetic simulation methods. The CHEMKIN kinetic simulation package was used with the GRI kinetic mechanism. Pollutant concentrations, flame speeds, temperature profiles and lean flammability limits of methane/air, methane/hydrogen/air and methane/hydrogen/oxygen/air systems were compared at different addition percentages and equivalence ratios from 1.4 to the lean flammability limit. The addition of 10–20% hydrogen in the fuel was found to have a small effect in improving flame speed and lean flammability limit properties. However, the addition of oxygen and hydrogen in the same ratio as is found in water was shown to be beneficial. Improvements in the flame speeds of methane/air mixtures by the addition of 10% hydrogen and its associated oxygen were equivalent to the improvements obtained by the addition of 20% hydrogen only. In near stoichiometric mixtures, the addition of oxygen substantially increased the NO_x concentrations, but for lean mixtures no increase in NO_x was predicted. CO emissions were reduced when hydrogen displaced carbon-containing fuels.

Chapter 6.

THEORY: Chris Eckman — Research on Brown's Gas

The following science paper was presented by Chris Eckman at the 17th Annual Conference of the Natural Philosophy Alliance (NPA), 23-26 June, 2010, at Long Beach, California. The paper can be found in pages 141-144 of the Proceedings, Volume 7.

"Plasma Orbital Expansion of the Electrons in Water"

Idaho State University Undergraduate Student
246 Roosevelt Avenue, Pocetello, Idaho 83209
E-mail: cryptoscientia@gmail.com

1. Introduction

Brown's Gas boasts a plethora of unusual characteristics that defy current chemistry. It has a cool flame of about 130°C (266°F), yet melts steel, brick and many other materials. Confusingly, research both confirms and rebuffs many claims about it, leading to a smorgasbord of theories today seeking to explain its unusual properties.

One possible theory, currently gaining support even from establishment science, depicts "plasma orbital expansion of the electron in a water molecule". In this process, unlike electrolysis, the water molecule "bends" into a linear, dipole-free geometry. This linear water molecule expands to gain electrons in the d sub-shell, and these extra electrons produce different effects on different target materials. Electrons that scatter at point of contact produce heat based upon electrical conductivity, density and thermal capacity of the material. It also shows why Rydberg clusters are a part of Brown's Gas and how the linear water molecule needs these clusters to survive. This paper will explain this new theory and why it is gaining popularity among scientist in academia.

George Wiseman defines Brown's Gas (I agree with this definition) as ***"the entire mixture of gasses evolving from an electrolyzer specifically designed to electrolyze water and not separate the resulting gasses."*** Brown's Gas is unique. It has testable properties that show something is different about this gas. This paper shows the possibilities that exist to help explain this phenomenon.

One of the key differences in Brown's Gas is that some of the water molecules go into an excited isomer plasma state; hence Brown's Gas has more energy density because water molecules have more energy and are in small clusters called Rydberg Clusters. Rydberg Clusters are atoms and (or) molecules that are weakly bound by the electrons and the electromagnetic force together in miniature clusters. Plasmas are partially ionized gas, in which a certain proportion of electrons are free rather than being bound to an atom or molecule. The ability of the positive and negative charges to move somewhat independently makes the plasma electrically conductive so that it responds strongly to electromagnetic fields.

In Brown's Gas there is a unique form of plasma in which electrons are weakly held rather than free floating. This is known as "Non-equilibrium plasma" or "cold plasma". In this type of plasma the electrons have high energies but the molecules or atoms that hold the extra electrons are relatively unenergetic. In a Brown's Gas torch, these extra electrons are what produce the immense heat, while the molecule or atoms releasing these electrons remains relatively cool. By definition, an isomer is any molecule that has the same number and type of atoms, like H_2O is always going to be water, but the structure or orientation of those atoms in the molecule may be different.

In Rydberg clusters this new form of water can exist much longer than if by itself. This allows the gas to hold more energy than normal H_2 and O_2 mixed and ignited.

2. Isomers of Water

There are ways to determine the stability of isomers. Some isomers of molecules are naturally stable, but most of these unusual isomer states are unstable and will not last long. One method is to determine how much hold the atoms in a molecule have for their electrons and how much room there would be for more. The original water molecules exist in a sp3 hybridized state whereas the "linear" molecule would have to use the d subshell of the n = 3 shell to become a sp3d hybrid state. This allows for the expansion of the extra electrons (but it will not hold them for long). Upon relaxation it would resume its original state reclaiming its polarity and attraction to other water molecules.

The water molecule would go from the tetrahedral and bent shape (4 electron pairs, 2 used and 2 not used) to the trigonal bipyramidal (5 electron pairs, 2 used, 3 not used) and linear shapes, as in Figure 1.

The energy that was soaked in to the new state is not very stable and will quickly release the extra electrons and fall back into its regular state (just water). Rydberg clusters hold it in this new state and will cause the isomer to last much longer then if this isomer were by itself. Water in most forms is a great insulator. However in this odd form of "electric steam" it would act very much like a conductor. Indeed, Brown's Gas seems to be great at conducting electricity.

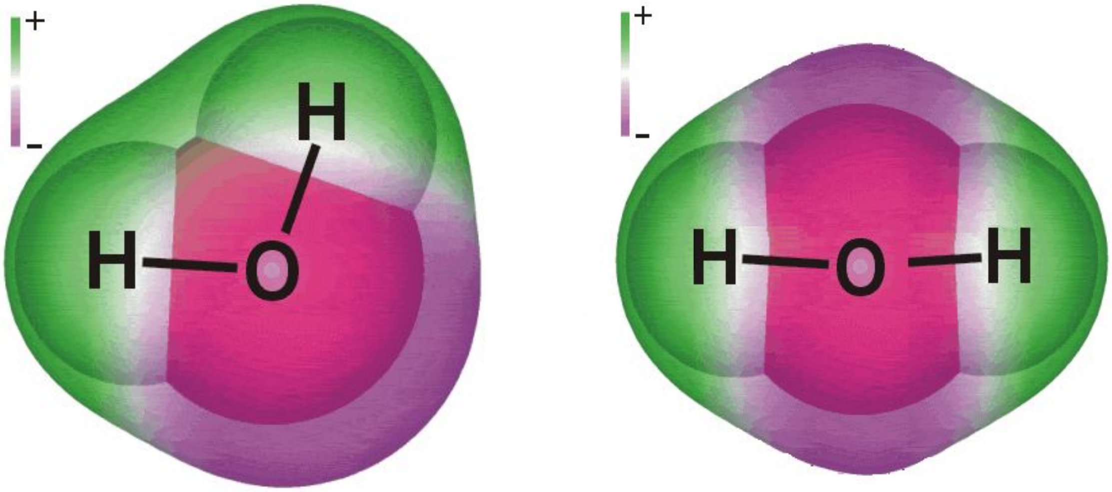

Fig. 1. Normal vs. linear water molecule

This new 'electric steam' is a form of plasma where only the electrons would be excited, and the water molecules would be much cooler. Water vapor molecules will be broken up in the plasma, but we find that Brown's Gas has a significant amount of water in it. This would actually be absorbing a huge amount of energy and lower the total amount of energy per liter, but this is not the case. The water is protected if in a non-equilibrium plasma state. This means that it still water but has a 'shell' or 'layer' of electrons being carried piggy-back by the water as seen in figure 1. Also Rydberg clusters hold more energy density and keep the new water isomer stable longer.

If one was to take the individual atoms found in water and combines the orbitals of each atom, the hydrogen can have a max of 2 electrons and the oxygen will have a max of 8 electrons. The oxygen is the only thing big enough to take on more electrons, however the Octet rule will not allow for it. The Octet rule says that certain atoms, like oxygen, can have up to 8 bonding electrons. One thing to note is the octet rule CAN have exceptions, when dealing with isomers, excimers, and cold plasmas.

3. Production Process of the New Water Isomer

In order to be conductive, a continuously bonded substance needs to have a way for electrons to move through it. Water with ions in it passes electrons along through unoccupied orbital sites in the ions.

A substance such as salt would provide the ions needed to lower the resistance of pure water. In substances, electrons are pushed along by what is called a conduction band and a valence band.

These correspond to the LUMO (Lowest Unoccupied Molecular Orbital) and the HOMO (Highest Occupied Molecular Orbital). The LUMO, or conduction band, has some spots with no electrons in it, otherwise known as unoccupied. The HOMO is full of electrons; it cannot push them along because it is full. Therefore, in order for the material to conduct, the material needs to excite electrons from the HOMO to the LUMO so they can move through the substance. The LUMO and the HOMO are way too far apart for conduction to take place. The energetic cost of exciting the electrons is just too high. Putting enough energy in would break the bonds in the material, destroying it, before it will conduct in this way.

Electrons can also move through "holes," or unoccupied spaces in an unfilled HOMO state. There is a place for an electron to move into in the HOMO, so the material can "push" electrons across itself, from hole to hole. Water has no holes for any electrons to move to. Since this avenue of electron-pushing is closed, and the electrons can't reach the LUMO energetically; they can't move in water.

This is why if too much energy is pressed into water it will break into hydrogen and oxygen. Oxygen attracts electrons much more strongly than hydrogen (more electronegative), resulting in a water molecule having a positive charge on the side where the hydrogen atoms are and a negative charge on the other side, where the oxygen atom is. Electrical attraction between water molecules is due to this dipole nature of individual water molecules to pull each other closer together, making it more difficult to separate the molecules (meaning the charge differences will cause water molecules to be attracted to each other).

This attraction is known as hydrogen bonding. Surface tension is a manifestation of this unique bonding. Hydrogen bonding is a comparatively weak attraction compared to the covalent bonds within the water molecule itself. In Brown's Gas the new trigonal bipyramidal (linear) water molecule will be non-polar and will have a dipole-dipole with the negative charge pointing toward the oxygen. The hydrogen bonding will be weakened considerably but could still exist.

The reason that some of the water molecules gets "stuck" in a linear form and do not break down into hydrogen and oxygen is because the water isomer gets surrounded by hydrogen ions, oxygen ions and water vapor. The forces that are binding the clusters are electric and partially hydrogen bonding. However the interactions are a weak attraction and are known as Rydberg clusters.

4. Energy in Brown's Gas

Because water normally is within the N=2 shell, it needs a lot of energy to move up and would rather break down into Hydrogen and Oxygen then move up. However Brown's Gas may be moving up a level and storing the extra electrons in the N=3 orbital. Each gap holds a large amount of energy.

The electron density also makes it appear to still be in the range of water, not O_2 or H_2 or O or H, since none of them seem to give right answers mathematically for the electron densities. However Brown's Gas does. It is a unique relatively unknown structure of water.

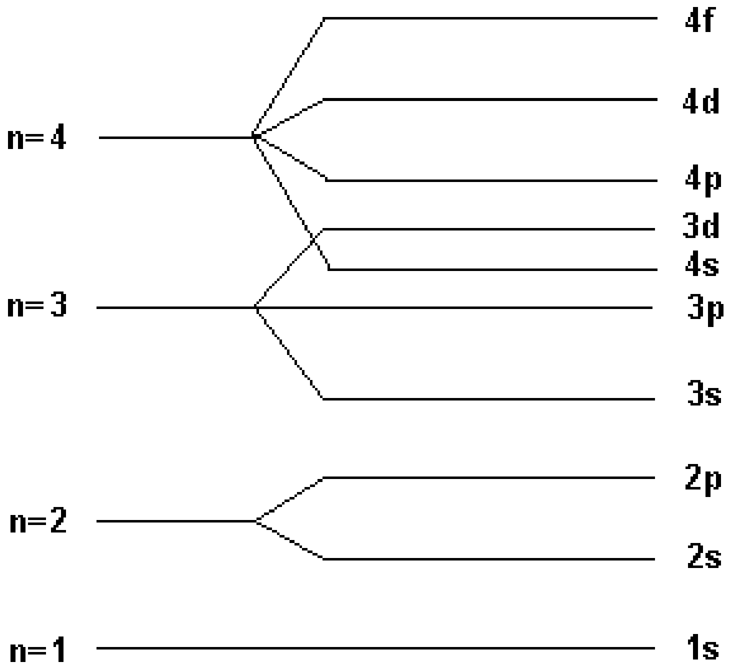

Fig. 2. N orbital's with corresponding sub-shells

Normally, the field present in the wire would create a net acceleration in the same direction of the force; however the constant collisions of electrons create a drag effect. The effect on a hole is an average group velocity referred to as the drift velocity v_d (in m/s). It is found by the following equations:

$$v_d = \frac{J}{n_e e} = \frac{V}{n_e e \rho L}$$

J = Current density (Amp/m^2)
n_e = Free electron density of material in water (particles/m^3)
e = Electron charge (1.602×10^{-19} C/particle)
V = Applied voltage (V)
ρ = Resistivity of the material (Ω-m)
L = Path length (m)

Using these equations will help to determine what amount of joules the electrons carry in the gas. The material being hit by Brown's Gas has those extra electrons transferred into the new target material. Those electrons disperse causing high heat due to the electrical resistance of that material. There is a point where the current density can become so large that the lattice binding energy in most materials can be overcome; this results in what is called the fusing point. The fusing point is a critical falling apart of the atomic structure, causing intense heat and energy.

The amount of joules that is added to Brown's Gas due to the extra electron presents would be approximately 600 (±34) joules per liter of Brown's Gas. This shows about the amount needed to be added to just hydrogen and oxygen burning to be in the area of Brown's Gas (about 1500 joules per liter). This result helps strengthen the fact that Brown's Gas is electrical in nature.

5. Rydberg Clusters

The linear water isomer is stable if it contains Rydberg matter clusters. These are clusters of highly excited matter (microscopic); the electrons are usually free floating in a limited area and can be bound by individual atoms or molecules. The life of a cluster will be dependent on what type of atoms and molecules make it up and will range from a few nano-seconds to a few hours. In lab experiments Brown's Gas average life is 11 minutes. Rydberg matter clusters are usually associated with solids and liquids, but can be found in gases. Something also intriguing is Rydberg matter clusters can be made using a unique electrolysis process in which special lengths and distances of the plates and the materials are used.

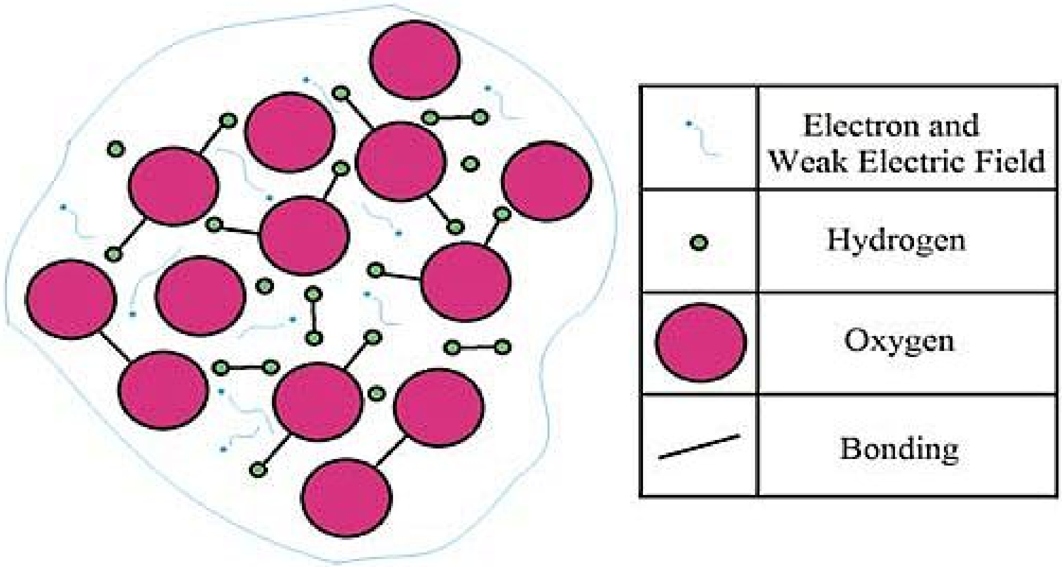

Fig. 3. Possible Rydberg cluster found in Brown's Gas

The Rydberg clusters may have hundreds to thousands of individual atoms and molecules in one cluster. Figure 3 depicts a Rydberg of a heterogeneous mix of water vapor, the linear water isomer, some free electrons, monatomic and diatomic hydrogen, monatomic and diatomic hydrogen, and some trace elements.

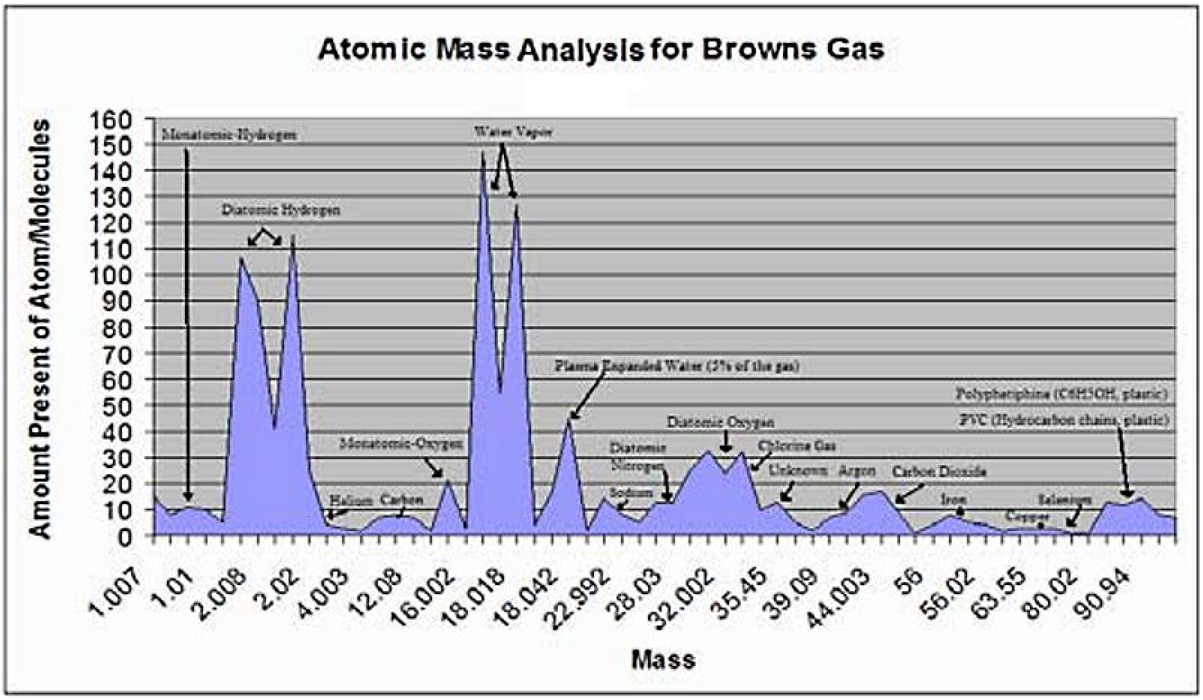

Fig. 4. Number of atoms or molecules (1000s) found in Brown's Gas

Figure 4 shows a breakdown of the elements and molecules of Brown's Gas. There are four main peaks above 30 thousand particles present in the test; these peaks are the basis of Brown's Gas. The first peak (from left to right) is diatomic hydrogen and is found in abundant amounts in the Brown's Gas mixture. There are two peaks due to the fact that there were isotopes of hydrogen in the test sample. The next major peak is water vapor, this normally would be undesired because it would take from the energy of the gas, but it is needed to form the Rydberg clusters. Therefore the water in Brown's Gas is needed to help increase the energy density of the gas. There are two peaks here because there are isotopes in the water as well.

The third peak is the one that was deemed unidentified by the test, but it is proposed that this is the linear water isotope, because it contains the weight of water with a few extra electrons. If this is the linear water molecule, than it is only making up about 3 to 12% of the total gas. It would not form if there were no Rydberg clusters present! It needs the other gases to make it stable as seen in figure 3. The fourth peak is the diatomic oxygen. This is less then what would be expected in normal electrolysis, but is normal in Brown's Gas.

Some things to note are the presence of monatomic hydrogen and oxygen, but in very small parts. Normally monatomic hydrogen and oxygen would bond right away to form H_2 and O_2, but it does not in Brown's Gas, they remain ions. This helps to prove that Rydberg clusters are forming.

There are also other trace elements, most likely due to exposure to those elements while forming in the tank, impurities in the water and traveling down the tube.

Evidence that Rydberg clusters have formed lies in the fact that when compared with the molar content of two parts hydrogen and one oxygen (compared to three molar of Brown's Gas), the Brown's Gas is significantly heaver. The same molar content shows that the density (not energy density) of Brown's Gas is much greater than that of just hydrogen and oxygen. If this weight was that of water then the Brown's Gas would be a poor torch and transfer very little heat. In fact, most of the heat would be absorbed into water vapor before hitting the target material.

However, for the case of Brown's Gas, this water is trapped in energetic states with ions and a new form of linear water isomer. This gives the gas a higher energy per volume (note that molar and volume are very different) then that of hydrogen and oxygen.

6. Brown's Gas Plasma Reaction to Materials

Brown's Gas will produce a different temperature at point of contact depending on the target material. This is because electrons that scatter at point of contact produce heat based upon the melting or vapor point of the material, electrical conductivity, density and thermal capacity of the material (how much heat it will absorb). The extra electrons in the Brown's Gas will repel nearby electrons of the target material. The electron's new neighbor electron in the target material finds it repulsive, and will move away, creating a chain of interactions that propagates through the material at near the speed of light.

The drift velocity (electrons movement in a material) is usually fractions of a millimeter per second, but if there are too many electrons in one spot, the target will fall apart, at an atomic scale, due to the sudden introduction of the new electrons and the repelling negative forces.

These high energy electrons will not travel as fast as the gas was traveling, when it hits the surface of something the electrons will slow down significantly, thus releasing their kinetic energy as heat; the more dense and resistive the material the hotter it will be, the less dense or more conductive the material results in less heat being generated. Almost everything gets hotter when used as a resistor for electricity.

7. Electrical Presence

Fig. 5. Tungsten and its oxides found in a Brown's Gas torch

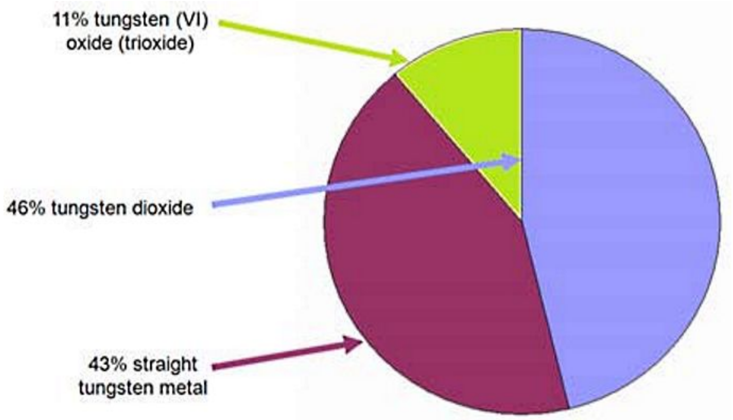

Laboratory gas spectrometer analysis was used on the Brown's Gas and Tungsten. It proved that about 46% of the gas was tungsten dioxide, 11% was tungsten (VI) oxide (trioxide) and the rest was about 43% straight tungsten metal, it was found that electricity will commonly make tungsten dioxide. Normally, "WO_2 is prepared by reduction of WO_3 with tungsten powder over the course of 40 hours at 900°C". It also has a super high electrical conductivity and shows promise for superconducting materials at high temps. The one that nature prefers is WO_3.

Attempts to replicate it using an Acetylene Torch failed to replicate Brown's Gas results. There were some amounts of WO_3, as expected, but negligible amounts of WO_2 when compared to Brown's Gas; this shows that Brown's Gas burns differently than an Acetylene Torch. Using electricity oxidize tungsten, the experiment found that there were similar ratios of tungsten oxides (within 12% of BG's numbers). Straight Tungsten oxide is not common and was negligible $< 0.001\%$ in the results. Small amounts of water and even smaller amounts of H_2 and O_2 were found, confirming an electrical presence.

8. Conclusion

Brown's Gas is different than other electrolysis processes.

This paper's introduction started out by quoting George Wiseman. He states "the entire mixture of gasses evolving from an electrolyzer specifically designed to electrolyze water and not separate the resulting gasses." The main point of this paper is that Brown's Gas is unique and different.

Normal water molecules exist in a bent shape, if this water molecule were to gain electrons it would normally break down into hydrogen and oxygen, hence electrolysis of water. In Brown's Gas this processes takes a slightly different turn where the water molecule will "bend" into a linear water molecule. The water molecule shape goes from the tetrahedral and bent (4 electron pairs, 2 being used and 2 not being used) to the trigonal bipyramidal (5 electron pairs, 2 being used and 3 not being used) and linear, this causes the shape change.

The new "linear" water molecule gains new electrons that would have to use the d sub-shell. Gaining the use of the d subshell allows for the expansion for the extra electrons. It is these electrons that produce different effects to different target materials, because electrons that scatter at point of contact produce heat based upon the electrical conductivity (or resistance), density and thermal capacity of the material (how much heat it will absorb).

To survive the length of time that the linear water molecule does requires some kind of support. It must be in a Rydberg cluster. Water vapor is important also. It all helps to trap extra energy and hold it until it reaches the torch nozzle and is ignited. This paper also stresses the fact that one thing is abundantly clear: ***Brown's Gas is ELECTRICAL in nature, not chemical!***

More research is needed to establish the fact that this linear isomer is essential for the formation of Rydberg clusters. Why does it need it to form these clusters? Why do O- and H+ remain stable in a Rydberg cluster? What special conditions (in the electrolyzer) are needed before the formation of Rydberg clusters happen? Why do different types of electrolyzers produce different amounts of Brown's Gas?

There are many possibilities for the Brown's Gas torch. There are new alloys that can form under this unique gas. There are new materials that can form. It can cut with laser like precision. It can weld (certain materials/metals) without the use of flux. This is due to the oxygen being used up by the hydrogen, thus little to no oxidation of metals occurs. It produces a range of different effects in different materials, due to the interactions of the electrons in the material and the electrons in the gas. There are great possibilities for the future.

References

[1] A. Bernas, C. Ferradini, J.-P. Jay-Gerin, *Chem. Phys.* 222:151 (1997).
[2] A. Bernas, C. Ferradini, J.-P. Jay-Gerin, *J. Photochem. and Photobio. A: Chem.* 117:171 (1998).
[3] A. D. Becke, *J. Chem. Phys.* 98:5648 (1993).
[4] Jay L. Wile, Advanced Chemistry in Creation (Apologia Educa- tional Ministries, 2001).
[5] A. Michrowski, "Anomalous Water Explained by Brown's Gas Research" and "Yull Brown's Gas", *Planetary Association for Clean Energy Newsletter* 6(4):10-12 (Jul 1993).
[6] T.E. Bearden, "A Redefinition of the Energy Ansatz, Leading to a Fundamentally New Class of Nuclear Interactions", *Proceedings of the 27th Intersociety Energy Conversion Engineering Conference, IECEC* 4:303-310, San Diego, California, c/o Am. Nuclear Society (1992).
[7] Yull Brown, "Welding", US Patent 4,014,777 (Mar 29, 1977). "The invention also relates to atomic welding to which the mixture {of hydrogen and oxygen generated ion substantially stoichiometric proportions} is passed through an arc causing disassociation of both the hydrogen and oxygen into atomic hydrogen and oxygen which on recombination generate an extremely hot flame."
[8] C. Chieh, "Bond Lengths and Energies", http://www.science.uwaterloo.ca/~cchieh/cact/c120/bondel.html retrieved 2007-12-16.
[9] C. Lee, W. Yang, R. G. Parr, *Phys. Rev.* B37:785 (1988).
[10] F. Abu-Awwad, P. Politzer*, J. Comput. Chem*. 21:227 (2000).
[11] G. P. Parravicini, L. Resca, Phys. Rev. B8:3009 (1973).
[12] Bryan Palaszewski, "Solid Hydrogen Experiments for Atomic Pro- pellants: Particle Formation Energy and Imaging Analyses". Glenn Research Center, Cleveland, Ohio. http://gltrs.grc.nasa.gov/reports/2002/TM-2002-211915.pdf, retrieved 2007-12-16.
[13] Speciality Welds 2000 – 2010. http://www.specialwelds.com/underwater-welding/atomic-hydrogen-welding.htm, 2007-12-16.
[14] http://www.phact.org/e/bgas.htm, retrieved 2007-12-16.
[15] T.E. Bearden, "The Atomic Hydrogen Reaction", http://www.cheniere.org/misc/a_h%20reaction.htm, retrieved 2007-12-16.
[16] http://www.eagle-research.com/browngas/whatisbg/whatis.html
[17] http://www.watertorch.com/whatis/whatis1.html
[18] J. V. Coe et al, *J. Chem. Phys.* 107:6023 (1997).
[19] K. Coutinho, S. Canuto, "DICE: A General Monte Carlo Program for Liquid Simulation". University of São Paulo, Brazil (2000).
[20] Maroulis, George. "Atoms, Molecules and Clusters in Electric Fields". Imperial College Press, London 2006
[21] Larry Oja, Malad, Idaho, used his ER1600 WaterTorch and tools.
[22] J. McCarthy, "Hydrogen" (1995-12-31), http://www-formal.stanford.edu/jmc/progress/hydrogen.html retrieved 2008-03-14.
[23] M.J. Frisch, "Rydberg Clusters" *Gaussian-98*, Pittsburgh, PA (1998).
[24] P. Cabral do Couto et al, *J. Chem. Phys*. 119:7344 (2003).
[25] P. Politzer, F. Abu-Awwad, *Mol. Phys.* 95:681 (1998).
[26] S. Canuto, K. Coutinho, *Adv. Chem. Phys.* 28:90 (1997).
[27] S. H. Vosko, L. Wilk, M. Nusair, *Canadian J. Phys.* 58:1200 (1980).
[28] Welding Handbook, Vol. 2 (American Welding Society, 1991).
[29] W. J. Hehre et al, Ab Initio Molecular Orbital Theory (John Wiley & Sons, New York, 1986).
[30] X. Hua et al, *Phys. Rev.* B55:16103 (1997).

Chapter 7.
THEORY: Santilli — New Gaseous and Combustible Form of Water

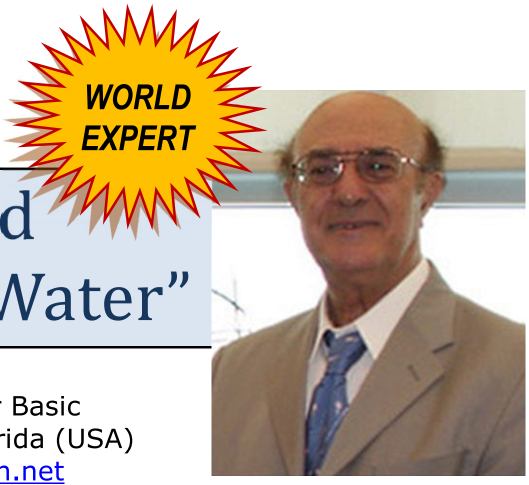

“A New Gaseous and Combustible Form of Water”

- Author: Ruggero Maria Santilli, Institute for Basic Research, P.O. Box 1577, Palm Harbor, Florida (USA) Tel.: +1 727 934 9593; E-mail: ibr@verizon.net
- Published: International Journal of Hydrogen Energy, Vol.31 (2006) pg 1113-1128
- Link: http://blog.everydayscientist.com/wp-content/uploads/2006_Santilli_IntJofHydrogenEnergy31_1113_CombustibleFormWater3.pdf

Abstract

In this paper we present, apparently for the first time, various measurements on a mixture of hydrogen and oxygen called HHO gas produced via a new electrolyzer (international patents pending by Hydrogen Technologies Applications, Inc. of Clearwater, Florida), which mixture is distinctly different than the Brown and other known gases. The measurements herein reported suggest the existence in the HHO gas of stable clusters composed of H and O atoms, their dimers H–O, and their molecules H_2, O_2 and H_2O whose bond cannot entirely be of valence type. Numerous anomalous experimental measurements on the HHO gas are reported in this paper for the first time. To reach their preliminary, yet plausible interpretation, we introduce the working hypothesis that the clusters constituting the HHO gas constitute another realization of a recently discovered new chemical species called for certain technical reasons magnecules as well as to distinguish them from the conventional "molecules" [Santilli RM. Foundations of hadronic chemistry with applications to new clean energies and fuels. Boston, Dordrecht, London: Kluwer Academic Publisher; 2001].

It is indicated that the creation of the gaseous and combustible HHO from distilled water at atmospheric temperature and pressure occurs via a process structurally different than evaporation or separation, thus suggesting the existence of a new form of water, apparently introduced in this paper for the first time, with the structure (H × H)–O where "×" represents the new magnecular bond and "–" the conventional molecular bond. The transition from the conventional H–O–H species to the new (H × H)–O species is predicted by a change of the electric polarization of water caused by the electrolyzer. When H–O–H is liquid, the new species (H × H)–O can only be gaseous, thus explaining the transition of state without evaporation or separation energy. Finally, the new species (H × H)–O is predicted to be unstable and decay into H × H and O, by permitting a plausible interpretation of the anomalous constituents of the HHO gas as well as its anomalous behavior. Samples of the new HHO gas are available at no cost for independent verifications, including guidelines for the detection of the new species.

1. Introduction

Studies on the electrolytic separation of water into hydrogen and oxygen date back to the 19th century (for a textbook on the water molecule see, e.g., Ref. [1a] and for an account on its electrolytic separation see, e.g., Ref. [1b]). More recently, there has been considerable research in the separation of water into a mixture of hydrogen and oxygen gases. These studies were initiated by Yull Brown in 1977 via equipment generally referred to as electrolyzers and the resulting gas is known as "Brown gas" (see patents [2]).

In accordance with these patents as well as the subsequent rather vast literature in the field, the Brown gas is defined as a combustible gas composed of conventional hydrogen and conventional oxygen gases having the exact stoichiometric ratio of 2/3 (or 66.66% by volume) of hydrogen and 1/3 (or 33.33% by volume) of oxygen.

In this paper the author (a physicist) presents to the chemistry community for its independent verification various measurements on an apparently new mixture of hydrogen and oxygen hereon referred to as the HHO gas (international patent pending) developed by Hydrogen Technology Applications, Inc., of Clearwater, Florida (www.hytechapps.com). The new HHO gas is regularly produced via a new type of electrolyzer and has resulted to be distinctly different in chemical composition than the Brown gas, even though both gases share a number of common features.

The main scope of this paper is to report, apparently for the first time, new clusters of hydrogen and oxygen atoms contained in the HHO gas, which clusters appear to escape the traditional valence interpretation and constitute one of the novelties of the HHO gas over the Brown gas.

Another objective of this paper is to initiate quantitative studies on the rather unique features of the HHO gas that do not appear to be representable via the conventional quantum chemistry of hydrogen and oxygen gases.

Yet another objective of this paper is to present a working hypothesis to initiate the understanding of the capability by the HHO electrolyzers to perform the transition of water from the liquid to a gaseous state via a process structurally different than evaporation or separation, due to the use of energy dramatically less than that required by said evaporation or separation. The final objective of this paper is the submission, apparently for the first time, of a new form of the water molecule created by the HHO electrolyzers via the removal of its natural electric polarization and consequential collapse of the two HO dimers, from their conventional configuration with 105° to a new configuration in which the two dimers are collapsed one against the other due to their neutral charge and strongly attractive opposing magnetic polarizations.

Due to the loss of electric polarization, polymerization and other features, the above new form of the water molecule permits a plausible representation of the creation of the HHO gas from liquid water without the evaporation energy. Its unstable character also permits a plausible interpretation on the experimental measurements of all anomalous features of the HHO gas.

Independent verification by interested chemists of the various measurements reported in this paper are solicited, jointly with the conduction of additional much needed tests. Samples of the HHO gas can be obtained at any time by contacting Hydrogen Technology Applications, Inc. at their website www.hytechapps.com

2. Experimental measurements on the new HHO gas

Under visual inspection, both the HHO gas results to be odorless, colorless and lighter than air, as it is also the case for the Brown gas. Their first remarkable feature is the efficiency E of the electrolyzer for the production of the gas, here simply defined as the ratio between the volume of HHO gas produced and the number of Watts needed for its production. In fact, the electrolyzers rapidly convert water into 55 standard cubic feet (SCF) of HHO gas at 35 pounds per square inch (PSI) via the use of 5 kWh, namely, an efficiency that is at least 10 times the corresponding efficiency of conventional water evaporation, thus permitting low production costs. The above efficiency establishes the existence of a transition of water from the liquid to the gaseous state that is not caused by evaporation. By keeping in mind the combustible character of the HHO gas compared to the noncombustible character of water vapor, the above efficiency suggests the existence of new chemical processes in the production of the gas that deserve quantitative studies.

A second important feature is that the HHO gas does not require oxygen for combustion since the gas contains in its interior all oxygen needed for that scope, as it is also the case for the Brown gas. By recalling that other fuels (including hydrogen) require atmospheric oxygen for their combustion, thus causing a serious environmental problem known as oxygen depletion, the capability to combust without any oxygen depletion (jointly with its low production cost) render the gas particularly important on environmental grounds.

A third feature of the gas is that it does not follow the PVT[30] of gases with conventional molecular structure, since the gas reacquires the liquid water state at a pressure of the order of 150 psi, while conventional gases acquire the liquid state at dramatically bigger pressures. This feature suggests that the gas here considered does not possess a conventional molecular structure, namely, a structure in which the bond is of entire valence type.

A fourth feature of the gas is its anomalous adhesion (adsorption) to gases, liquids and solids, as verified experimentally below, thus rendering its use particularly effective as an additive to improve the environmental quality of other fuels, or other applications. This feature is manifestly impossible for conventional gases H_2 and O_2, thus confirming again a novel chemical structure.

A fifth feature of the gas is that it exhibits a widely varying thermal content, ranging from a relatively cold flame in open air at about 150°C, to large releases of thermal energy depending on the substance to which the flame is applied to, such as the instantaneous melting of bricks requiring up to 9000°C.

The measurements conducted by the author at various independent laboratories on the HHO gas can be summarized as follows.

On June 30, 2003, Adsorption Research Laboratory of Dublin, Ohio (USA), measured the specific weight of the HHO gas and released a signed statement on the resulting value of 12.3 g/mol. The same laboratory repeated the measurement on a different sample of the gas and confirmed the result.

The released value of 12.3 g/mol is anomalous. In fact, the conventional separation of water into H_2 and P_2 produces a mixture of 2/3 HBN_2 and 1/3 O_2 that has the specific weight $(2 + 2 + 32)/3 = 11.3$ g/mol. Therefore, we have the anomaly of $12.3 - 11.2 = 1$ g/mol, corresponding to 8.8% anomalous increase in the value of the specific weight. Rather than the predicted 66.66% of H_2 the gas contains only 60.79% of the species with 2 atomic mass units (amu), and rather than having 33.33% of O_2 the gas contains only 30.39% of the species with 32 amu.

These measurements provide direct experimental evidence that the HHO gas is not composed of a sole mixture of H_2 and O_2, but has additional heavier species. Moreover, the HHO gas used in the tests was produced from distilled water. Therefore, there cannot be an excess of O_2 over H_2 to explain the increased specific weight. The above measurement establishes the presence in HHO of 5.87% of hydrogen and 2.94% oxygen bonded together into species heavier than water, as identified below via mass spectroscopy and other analytic measurements.

Adsorption Research Laboratory also conducted scans of the HHO gas via a Gas Chromatographer (GC) reproduced in Fig. 1 establishing the presence in the HHO gas of the following species here presented in order of their decreasing percentages:

---

[30] Pressure-Volume-Temperature relationships

(1) A first major species with 2 amu expectedly representing gaseous hydrogen.
(2) A second major species with 32 amu expectedly representing gaseous oxygen.
(3) A large peak at 18 amu expectedly representing water vapor.
(4) A significant peak with 33 amu expectedly representing a new species expectedly of nonmolecular nature.
(5) A smaller yet clearly identified peak at 16 amu expectedly representing atomic oxygen.
(6) Another small yet fully identified peaks at 17 amu expectedly representing the radical OH whose presence in a gas is also anomalous.
(7) A small yet fully identified peak at 34 amu expectedly representing the bond of two dimers HO that is also anomalous for a gas.
A smaller yet fully identified peak at 35 amu that cannot be identified in any known molecule. **{same unknown peak indicated by Chris Eckman!** ~Ozzie}
(9) Additional small peaks expected to be in parts per million.

It should be added that the operation of the GC detector was halted a few seconds following the injection of the HHO gas, while the same instrument was operating normally with other gases. This anomalous behavior can be best interpreted via an anomalous adhesion of the gas to the walls of the feeding line as well as of the column and other parts of the instruments, an anomalous adhesion confirmed by additional tests reviewed below.

On July 22, 2003, the PdMA Corporation in Tampa, Florida, conducted InfraRed (IR) scans reported in Figs. 2–4 via the use of a Perkin-Elmer IR scanner model 1600 with fixed point/single beam. The reported scans refer to a conventional H_2 gas (Fig. 2), a conventional O_2 gas (Fig. 3), and the HHO gas (Fig. 4).

Inspection of these scans shows a substantial differences between HHO gas and H_2 and O_2 gases. In fact, the latter gases are symmetric molecules, thus having very low IR peaks, as confirmed by scans 2 and 3. The first anomaly of HHO is that of showing comparatively much stronger resonating peaks. Therefore, the indicated IR scans establish that the HHO gas has an asymmetric structure, which is remarkable since the same feature is absent for the conventional mixture if H_2 and O_2 gases.

Moreover, H_2 and O_2 gases can have at most two resonating frequencies each, one for the vibrations and the other for rotations. Spherical distributions of orbitals and other features imply that H_2 has essentially only one IR signature as confirmed by the scan of Fig. 2, while OO_2 has one vibrational IR frequency and three rotational ones, as also confirmed by the scans of Fig. 3. Inspection of the IR scans for the HHO gas in Fig. 4 reveals additional novelties. First, the HHO scan show the presence of at least nine different IR frequencies grouped around wavenumber 3000, plus a separate distinct frequency at around wavenumber 1500.

These measurements provide experimental evidence that the species with 18 amu detected in the GC scans of Fig. 1 is not water vapor, but a yet unknown bond of two hydrogen and one oxygen atoms.

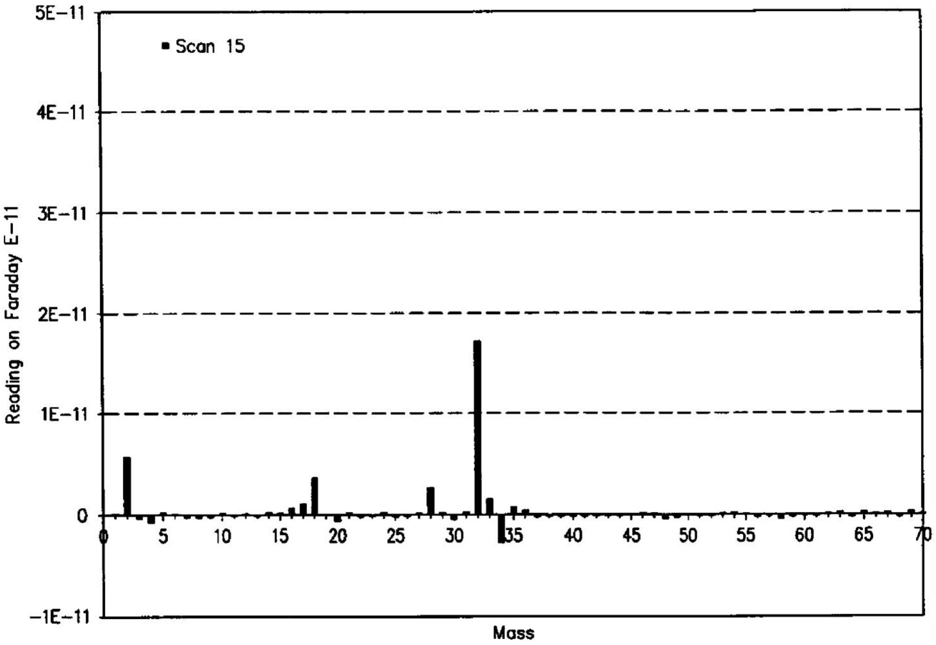

Fig. 1. A view of one of the GC scans on the HHO gas conducted by Adsorption Research Laboratories showing conventional as well as anomalous peaks.

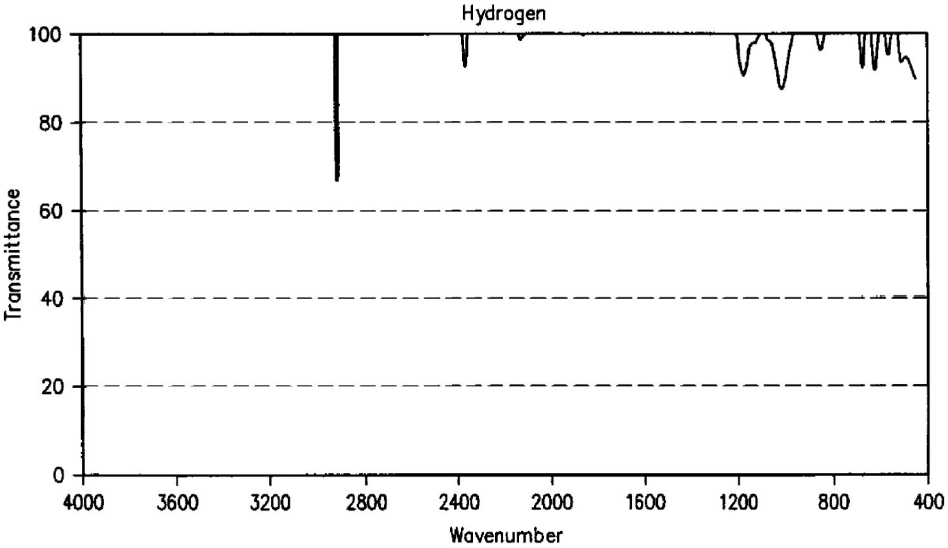

Fig. 2. The IR signature of a conventional H2 gas made by the PdMA laboratory.

In fact, water vapor has IR frequencies with wavelengths 3756, 3657, 1595, their combination and their harmonics (here ignored for simplicity). The scan for the HHO gas in Fig. 4 confirms the presence of an IR signature near 1595, thus confirming the molecular bond HO, but the scan shows no presence of the additional very strong signatures of the water molecules at 3756 and 3657, thus establishing the fact that the peak at 18 amu is not water as conventionally understood in chemistry.

On July 22, 2003, the laboratory of the PdMA Corporation in Tampa, Florida measured the flash point, first on commercially available Diesel fuel, detecting a flash point of 75°C, and then of the same fuel following the bubbling in its interior of the HHO gas, detecting the flash point of 79°C.

The latter measurement too is anomalous because it is known that the addition of a gas to a liquid fuel reduces its flash point generally by half, rather than increasing it as in the above measurement, thus implying the expected flash value of about 37°C for the mixture of Diesel and HHO gas. Therefore, the anomalous increase of the flash point is not of 4°C, but of about 42°C.

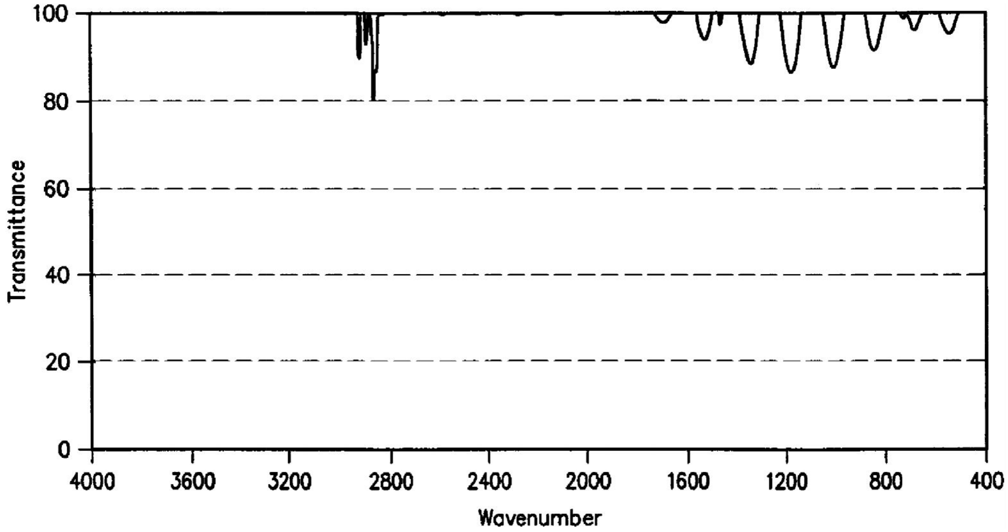

Fig. 3. The IR signature of a conventional O2 gas made by the PdMA laboratory.

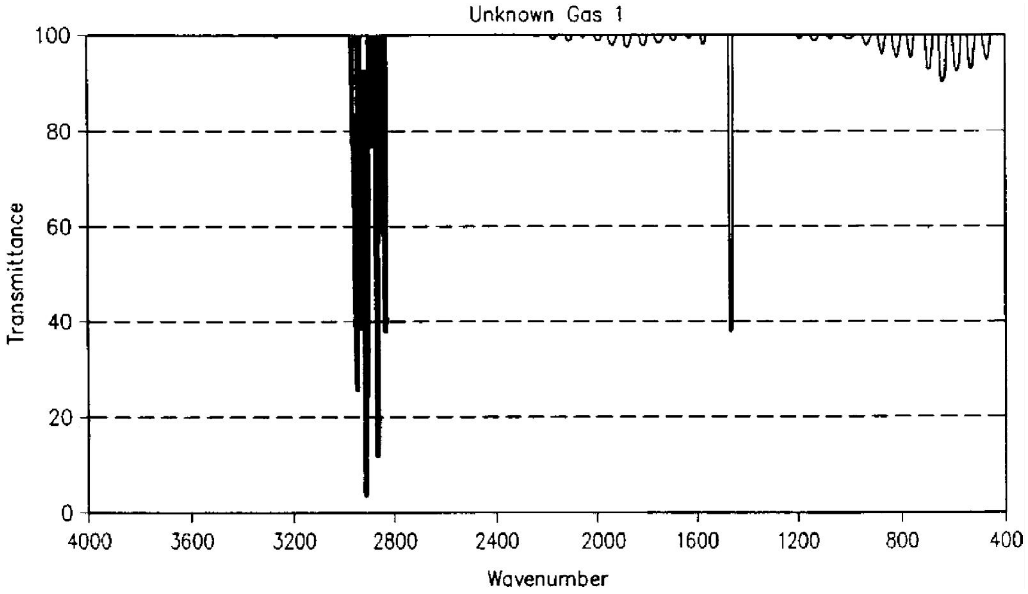

Fig. 4. The IR signature of the HHO gas made by the PdMA laboratory. When compared to the IR scans of Figs. 2 and 3, this scan shows that the HHO gas is not a mixture of H_2 and O_2 gases.

Such an increase cannot be explained via the assumption that HHO is contained in the Diesel in the form of a gas (otherwise the flash point would decrease), and requires the occurrence of some type of anomalous bond between the gas and the liquid that cannot possibly be of valence type.

An experimental confirmation of the latter bond was provided on August 1, 2003, by the Southwest Research Institute of Texas, that conducted mass spectrographic measurements on one sample of ordinary Diesel as used for the above flash point measurements, here reported in Fig. 5, and another sample of the same Diesel with HHO gas bubbled in its interior, here reported in Fig. 6. The measurements were conducted via a Total Ion Chromatogram (TIC) and gas chromatography mass spectrometry GC-MS manufactured by Hewlett Packard with GC model 5890 series II and MS model 5972. The TIC was obtained via a Simulated Distillation by Gas Chromatography (SDGC).

The column was a HP 5MS 30×0.25 mm; the carrier flow was provided by helium at 50°C and 5 psi; the initial temperature of the injection was 50°C with a temperature increase of 15°C per minute and the final temperature of 275°C.

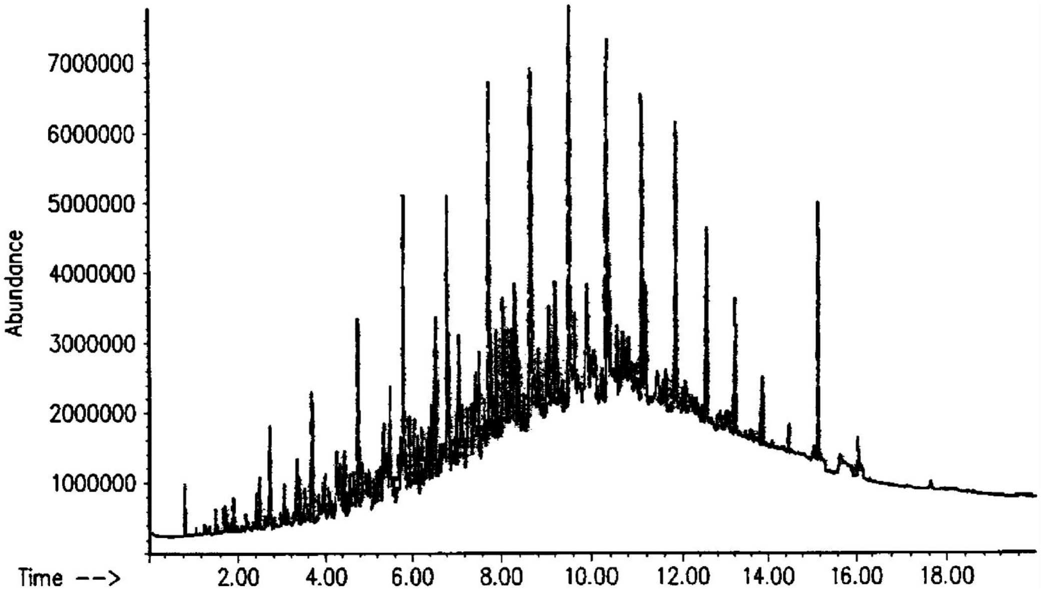

Fig. 5. A TIC of the GC-MS scans of conventionally sold Diesel fuel made by Southwest Research Institute.

The chromatogram of Fig. 5 confirmed the typical pattern, elution time and other feature of commercially available Diesel. However, the chromatograph of the same Diesel with the HHO gas bubbled in its interior of Fig. 6 shows large structural differences with the preceding scan, including a much stronger response, a bigger elution time and, above all, a shift of the peaks toward bigger amu values.

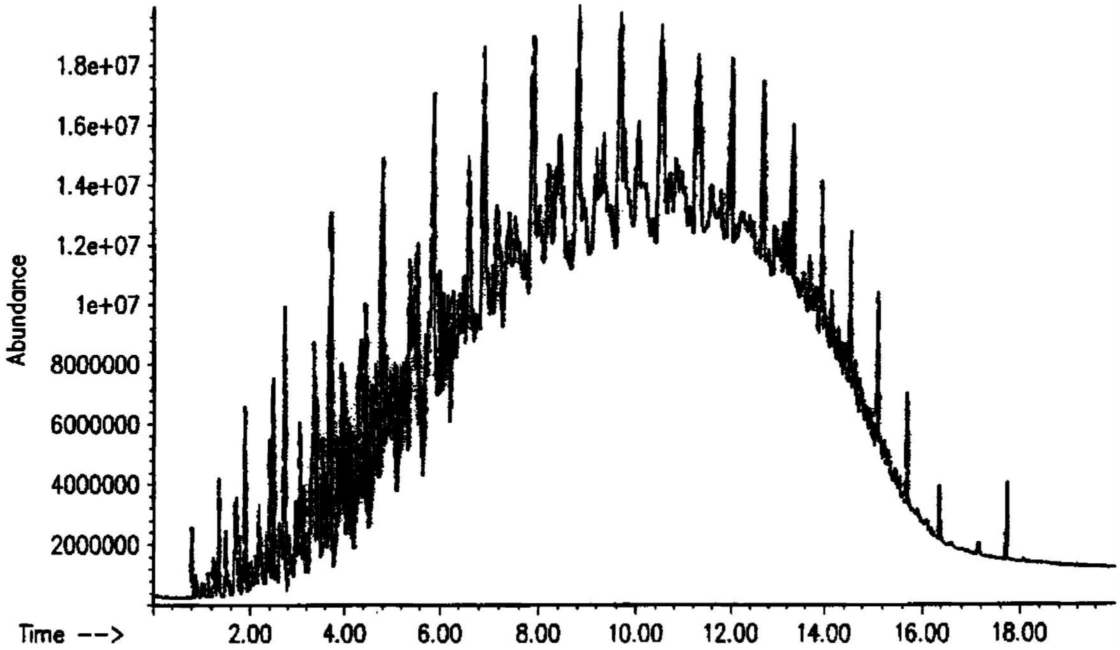

Fig. 6. A TIC of the GC-MS scans made by Southwest Research Institute on the same Diesel fuel of Fig. 5 in which the HHO gas had been bubbled through, showing the alteration of the TIC both in shape as well as increased mass, thus indicating a new bond between Diesel and HHO that cannot be of valence type (since HHO is gaseous and Diesel is liquid. In any case, all valence electrons in both the gas and the liquid are used by conventional molecular bonds).

Therefore, the latter measurements provide additional confirmation of the existence of an anomalous bond between the Diesel and the HHO gas, precisely as predicted by the anomalous value of the flash point and the clogging up of GC feeding lines. In turn such a bond between a gas and a liquid cannot possibly be of valence type, since all valence electrons are expected to be coupled in both the liquid and the gas.

Further mass spectrographic measurements on the HHO gas were done on September 10, 2003, at SunLabs, of the University of Tampa, Florida, via the use of a very recent GC-MS Clarus 500 by Perkin Elmer, one of the most sensitive instruments currently available to detect hydrogen.

Even though the column available at the time of the test was not ideally suited for the separation of all species constituting the HHO gas, the latter measurements confirmed the preceding results.

In fact, the scan of Fig. 10 confirms the presence in the HHO gas of a basic species with 2 amu representing hydrogen, plus a species with 5 amu that cannot admit any valence or molecular interpretation for the HHO gas even if the species is formed by the spectrometer.

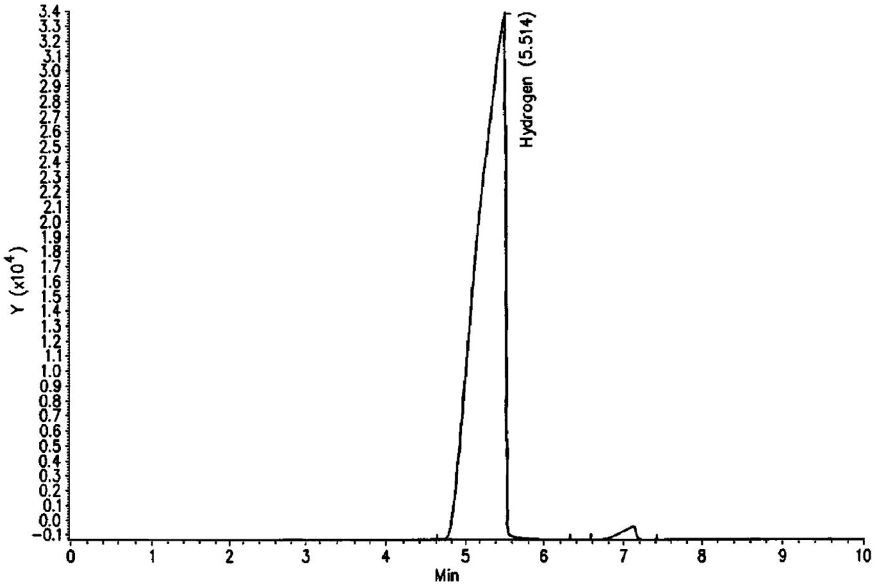

Fig. 7. A TIC of the GC-MS scans on the HHO gas made by Toxic LTD Laboratories showing the H_2 content of the HHO gas.

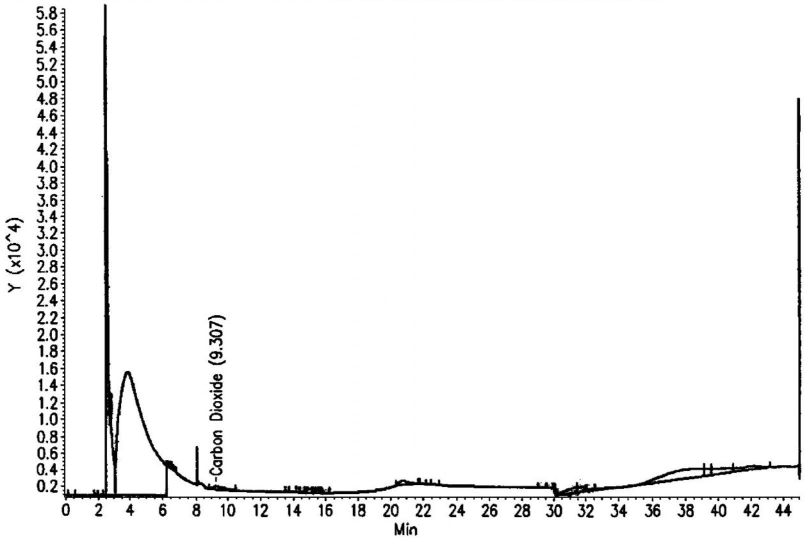

Fig. 8. A TIC of the GC-MS scans on the HHO gas made by Toxic LTD Laboratories showing the peaks belonging to H_2 and O_2, plus anomalous peaks.

In conclusion, the experimental measurements of the flash point and of the scans of Figs. 5 and 6 establish beyond doubt the capability by the HHO gas to have an anomalous bond with liquid fuels, that is, a bond that is not of valence type.

Additional analyses on the chemical composition of the HHO gas were done by Air Toxic LTD of Folsom, California, via the scans reproduced in Figs. 7–9. These scans confirmed that H_2 and O_2 are the primary constituents of the HHO gas. However, the same measurements identify the following anomalous peaks:

(a) A peak in the H_2 scan at 7.2 min elution time (Fig. 7).

(b) A large peak in the O_2 scan at 4 min elution time (Fig. 8).

(c) An anomalous blank following the removal of the HHO gas (Fig. 9), because said blank shows the preservation of the peaks of the preceding scans, an occurrence solely explained via anomalous adhesion of the HHO gas to the interior walls of the instrument.

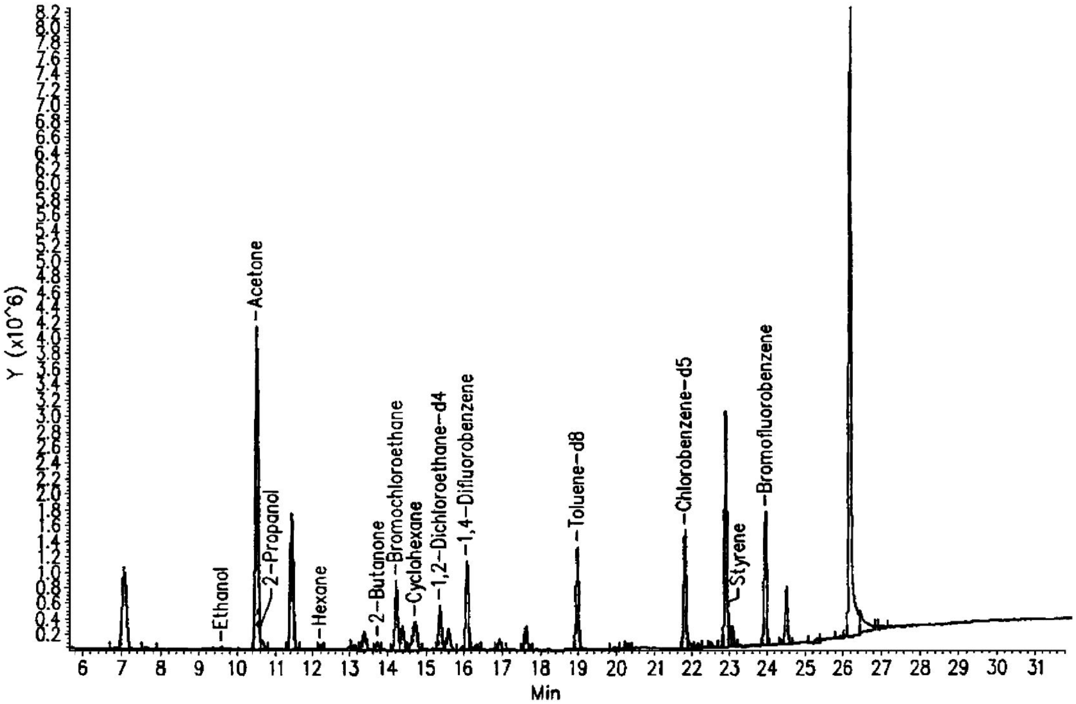

Fig. 9. One of the anomalous blanks of the GC-MS scans made by Toxic LTD Laboratories following the tests of the HHO. The blank is firstly anomalous because only the background should have been detected, thus indicating a bond between the HHO gas and the walls of the instrument, whose most plausible explanation is the magnetic polarization by induction of said walls by a form of magnetic polarization of the species composing the HHO gas. The second reasons for the anomalous nature of the blank is that the substances detected cannot possibly exist in the HHO gas produced from distilled water, thus showing an accretion of bonds to the instrument walls.

The scan of Fig. 11 provides evidence of a species with mass 16 amu that can only be interpreted as atomic oxygen, thus providing additional indication of the presence in the HHO gas of atomic hydrogen as expected from its capabilities, although the species, again, could be separated by the spectrometer due to the expected weak nature of the bond. The latter could not be detected in the preceding scan due to the impossibility of the instrument here considered to detect a species with 1 amu. The same scan of Fig. 11 confirms the presence in the HHO gas of a species with 17 amu and a species with 18 amu detected in earlier tests.

The scan of Fig. 12 establishes the presence in the HHO gas of species with 33 and 34 amu, while the species with 35 amu detected in preceding measurements was confirmed in other scans here not reported for brevity.

The tests also confirmed the blank anomaly, namely, the fact that the blank of the instrument following the removal of the gas continues to detect the basic species constituting the gas, which blank is not reproduced here for brevity, thus confirming the anomalous adhesion of the HHO gas to the interior walls of the instrument.

In summary, the above analytic measurements establish the following properties of the HHO gas: (I) An anomalous increase in specific weight of 1 g/mol (or 8.8% in volume) establishing the presence in the HHO gas of species heavier than the predicted mixture of H_2 and O_2, thus establishing the presence in the HHO gas of new species composed of H and O atoms that cannot possibly have valence bonds.

(II) The GC scans done by Adsorption Research (Fig. 1) confirm the presence of chemical species in the HHO gas that cannot have a valence interpretation, such as the species with 17, 33, 34, and 35 amu, besides conventional species with 2, 16 and 18 amu, all species independently confirmed by other tests, such as the scans of Figs. 10–12. (III) The halting of the GC instrument in the scans of Fig. 1 after a few seconds following the injection of the HHO gas, while the same instrument works normally for conventional gases, is experimental evidence for an anomalous adhesion by the HHO gas to the internal walls of the instrument, to such a level of occluding the column and causing the shutdown of the scan.

(IV) The large increase of the flash point of Diesel fuel following inclusion of the HHO gas also constitutes experimental evidence of anomalous adhesion by the HHO gas, this time, to a liquid fuel that cannot also be of valence type since all valence electrons available in both the liquid and the gas are expected to be paired.

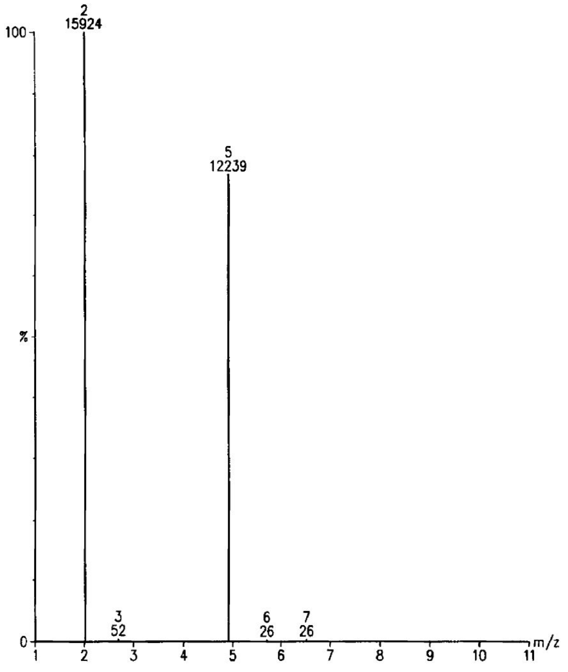

Fig. 10. The scan conducted by SunLabs on the HHO gas confirming the presence of H_2, plus additional anomalous peaks, such as the species at 5 amu, that cannot possibly admit a molecular interpretation.

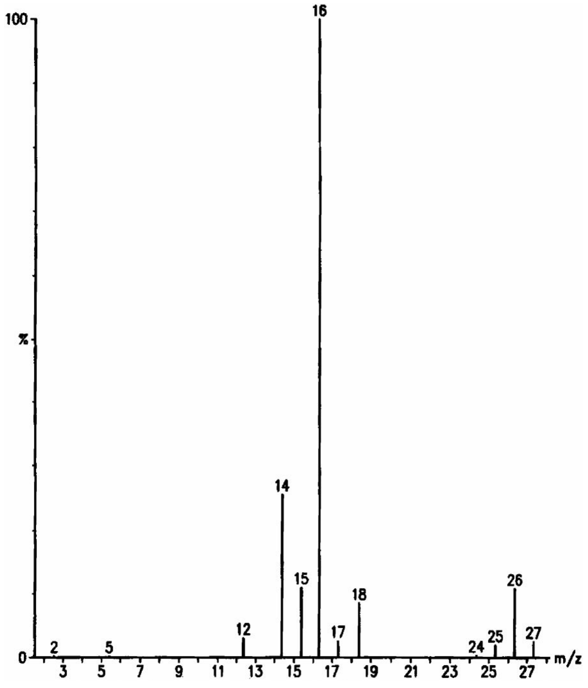

Fig. 11. The scan conducted by SunLabs on the HHO gas detecting a peak at 16 amu that confirms the presence of atomic oxygen in the HHO gas of Fig. 1, plus a peak at 17 amu indicating the presence of traces of the radical O–H, a peak at 18 amu indicating the presence of water vapor all three species also detected in the scan of Fig. 1, as well as additional anomalous peaks at 12, 14, 25, 26, 27 amu that, for the case of the HHO gas produced from distilled water cannot admit a molecular interpretation.

(V) The mass spectrometric measurements on the mixture of Diesel and HHO (Figs. 5 and 6) provide additional experimental confirmation of an anomalous bond between the HHO gas and Diesel.

(VI) The additional scans of Figs. 7–9 confirm all the preceding results, including the anomalous blank following the removal of the HHO gas, thus confirming the anomalous adhesion of the HHO gas to the internal walls of the instrument.

(VII) The capability by the HHO gas to melt instantaneously tungsten and bricks is the strongest evidence on the existence in the HHO gas of basically new chemical species that cannot possibly have a valance bond, since a mixture of 2/3 H_2 and 1/3 O_2 cannot melt instantly tungsten and bricks, as any interested chemist is encouraged to verify.

It should be indicated that a number of species in the HHO gas, particularly those with higher specific weight, are expected to be unstable and, as such, decomposed by the analytic instrument itself. In different terms, by no means GC, IR and other scans should be expected to detect all constituents of the HHO gas, since a number of them are expected to be decomposed or altered by the ionization and other processes connected to the scans themselves.

3. Tentative theoretical interpretation of the measurements

With the understanding that any expectation of a complete understanding of the chemical composition of the HHO gas in this first paper is not realistic, and any lack of release of anomalous new measurements due to lack of their final understanding is not scientific, we here submit a working hypothesis for further future studies according to which *the chemical composition of the HHO gas is another realization of the new species of Santilli magnecules* [3].

In this section we first outline the new species of magnecules, and then illustrate the plausibility of the above hypothesis by showing that it permits a quantitative representation of all anomalous experimental data on the HHO gas, while permitting the identification of a fundamentally novel form of water other than the conventional one.

Evidently, we solicit the formulation of different working hypotheses, under the condition that they are equally quantitative and do not deal with mere nomenclatures on hypothetical valence bonds without a precise identification of the attractive nature of the bonding force as well as its numerical value.

To begin, the current environmental problems are not caused by fossil fuels per se, but rather by the strength of their valence bonds that has prevented the achievement of a full combustion for over one century. In fact, hydrocarbons and other pollutants in the exhaust literally are chunks of uncombusted molecules (for which very reason these pollutants are carcinogenic).

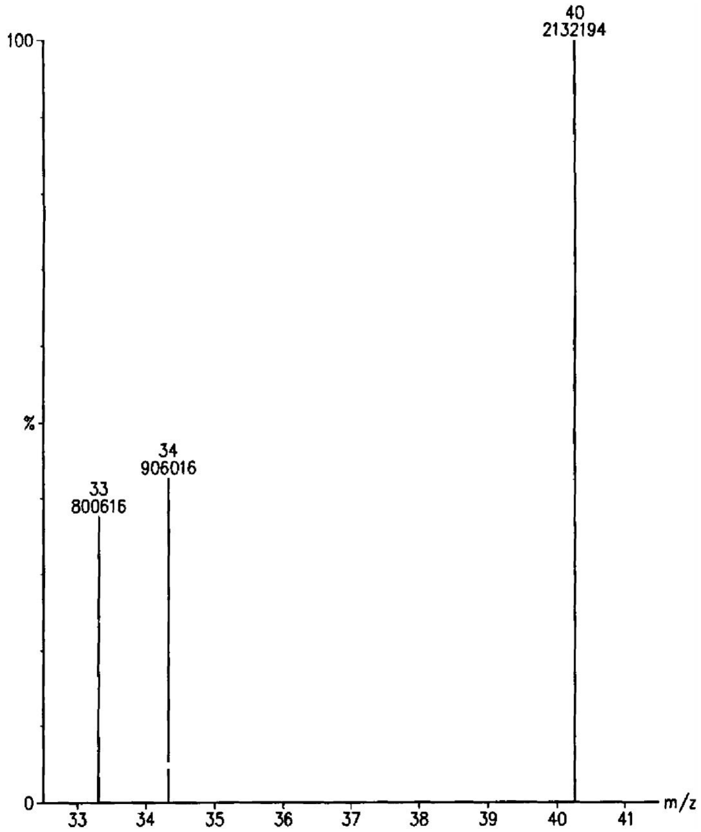

Fig. 12. A sample of various additional scans conducted by SunLabs on the HHO gas detecting anomalous peaks at 33, 34 and 40 amu that cannot possibly have a consistent molecular interpretation. Intriguingly, the peak at 35 amu detected in other tests did not appear sequentially in this scan, and appeared instead in other scans here not reported for brevity, thus indicating that the peaks of this and of the preceding scans conducted by SunLabs are, in actuality, the constituents of the clusters composing the HHO gas, and not the actual constituents themselves.

A solution was initially proposed in Ref. [5c] of 1998 and comprehensively studied in Ref. [3] of 2001 consisting of a new chemical species, today known as Santilli magnecules (in order to distinguish them from the conventional molecules) whose bond is stable, but sufficiently weaker than the valence bond to permit full combustion.

The new species required the identification of a new attractive force among atomic constituents that is not of valence type as a central condition, thus occurring among atoms irrespective of whether valence electrons are available or not.

The solution proposed in Refs. [3,5c] was the use of an external magnetic field sufficient to create the polarization of atomic orbitals into toroids (see Fig. 13), as a result of which the orbiting electrons create a magnetic moment along the symmetry axis of the toroid, which magnetic field is nonexistent in the conventional spherical distribution of the same orbitals.

Individual toroidal polarizations are, individually, extremely unstable because the spherical distribution is recovered in nanoseconds following the removal of the external magnetic field due to temperature related effects.

Nevertheless, when two or more toroidal polarizations are bonded together by opposing magnetic polarities North–South–North–South– etc. as (see Fig. 16), spherical distributions are again recovered in nanoseconds following the removal of the external magnetic field, but this time such distribution occurs for the bounded pair as a whole.

As indicated earlier, the word "valence" is essentially a nomenclature due to the lack of explicit and concrete identification of the "attractive" force necessary to produce a valance bond (for which reason, Santilli and Shillady proposed in Refs. [5a,b] new structure models of the hydrogen, water and other molecules with an explicitly identified "strongly attractive" valence bond admitting as particular cases various models of Coulomb screenings). By comparison, Santilli identified in the original proposal [5c] the attractive character of the magnecular forces as well as its numerical value, that was confirmed by Kucherenko and Aringazin [5d] as well as by others [3]. We therefore have the following:

Definition *(Santilli [3,5c]*). Santilli's magnecules are stable clusters consisting of individual atoms (H, O, etc.), dimers (OH, CH, etc.) and ordinary molecules (H_2, H_2O, etc.) bonded together by opposing magnetic polarities originating from toroidal polarizations of the orbitals of atomic electrons.

Various substances with magnecular structures have been identified experimentally to date, among which we indicate MagneGas [5e], MagneHydrogen [5f], and others under industrial development. Their primary features (for which large industrial investments have been made) is the complete combustion without contaminant in the exhaust as well as cost competitiveness over fossil fuels.

The first experimental evidence supporting the magnecular structure of the HHO gas is its capability of instantly melting tungsten and bricks. In fact, such a capability can only be explained via the presence in the HHO gas, not only of atomic (that is, unbounded) hydrogen as depicted in the top of Fig. 13, but also of atomic hydrogen with the toroidal polarization of their orbitals as depicted in the bottom of Fig. 13. In fact, no instantaneous melting of bricks is possible without the hydrogen contained in the HHO gas rapidly penetrating within deeper layers of the brick structure. Such a rapid penetration cannot be explained with atomic hydrogen, although it can be readily explained via the polarized hydrogen atom of the bottom of Fig. 13.

Besides having a smaller sectional area that favors fast penetration, polarized H-atoms cause an induced polarization of the orbitals of the atoms of the brick, their consequential attraction to the polarized H atoms, and the latter rapid penetration within deep layers of the brick structure. In turn, faster penetration within the lattice of solids implies a bigger reactivity that, in turn, causes a bigger melting temperature.

Moreover, polarized atomic hydrogen as well as oxygen are needed to explain the anomalous adhesion of the HHO gas to internal walls of detection instruments as well as to other substances.

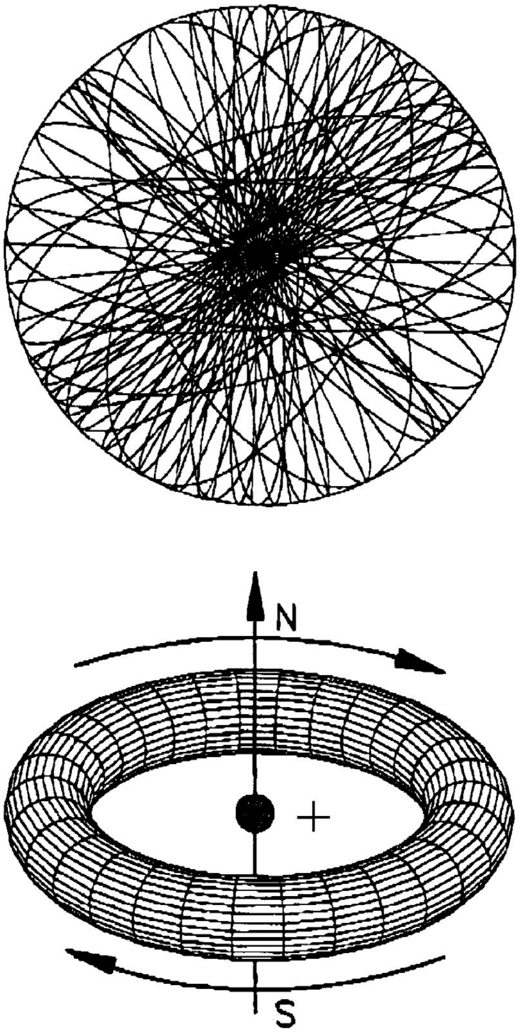

Fig. 13. The top view provides a conceptual rendering of an atomic hydrogen with the conventional spherical distribution of its orbitals that is assumed to be a constituent of the Brown Gas. The bottom view provides a conceptual rendering of the atomic hydrogen at absolute zero degree temperature (thus without rotations) with a toroidal polarization of its orbitals assumed to be a constituent of the HHO gas because permitting a quantitative interpretation of its anomalous features, such as the instantaneous melting of bricks, that cannot be explained via the sole assumption of atomic hydrogen. Needless to say, the toroidal shape of the polarization of the orbitals is a mere conceptual rendering and should not be assumed "ad litteram."[31]

Note that the studies of the Brown gas [2] have indicated the need for atomic hydrogen. Therefore, the presence of atomic and polarized hydrogen is a novelty of the HHO gas.

Evidently, individual hydrogen atoms cannot maintain their polarization as in Fig. 13 in view of motions caused by temperature, as well known. The only known possibility for maintaining said polarization is that polarized H atoms bond themselves with opposing magnetic polarities as depicted in Fig. 16. In fact, rotations and vibrations due to temperature occur for such bonded H atoms as a whole, while individually preserving said polarization.

---

[31] Ad litteram: (from Latin) to the letter; exactly.

In turn, bonds of polarized atomic hydrogen constitute the very basic bond of magnecules, thus supporting the hypothesis of the magnecular structure of the HHO gas.

Note that a conventional hydrogen gas cannot acquire any magnetic polarization because the conventional hydrogen molecules is diamagnetic. However, as established in Ref. [3], the diamagnetic character refers to the hydrogen molecule as a whole, because quantum mechanics establishes that each individual hydrogen atom of a hydrogen molecule can indeed acquire a magnetic polarization under sufficiently strong external magnetic fields.

The diamagnetic character of the hydrogen molecules, as depicted in Fig. 14, is due to the fact that the individual magnetic polarizations of its H atoms are opposite to each other, and are at such a close mutual distances to cancel each other when inspected at sufficiently large distances.

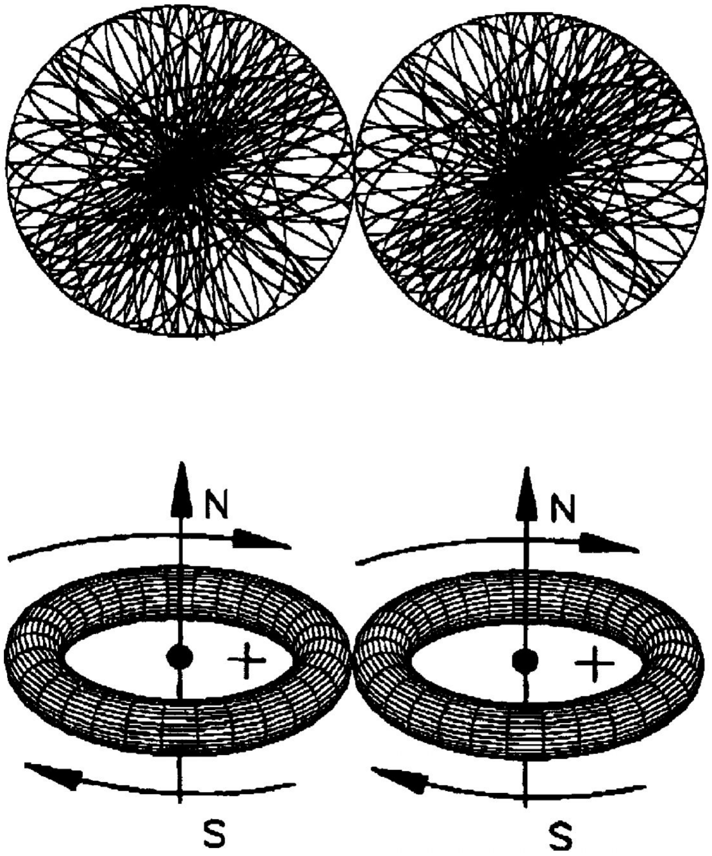

Fig. 14. The top view provides a conceptual (semiclassical) rendering of the valence bond of two H-atoms in a conventional hydrogen molecule. The bottom view provides a conceptual (semiclassical) rendering of the preceding view at absolute zero degrees temperature, according to the strong valence bond of Ref. [3] that permits an exact representation of all characteristics of the hydrogen molecule. In the latter case the strongly coupled valence electron pair characterize OO-shaped orbitals, the only ones representing the diamagnetic character of the molecule [3].

Needless to say, the above hypothesis on the polarization of atomic hydrogen also applies to oxygen, the latter being known to be paramagnetic, resulting in atomic oxygen with the spherical distribution of orbitals, polarized atomic oxygen with the polarization of at least the valance electrons, and pairs of bonded polarized oxygen atoms as depicted in Fig. 16.

The first prediction of the magnecular structure of the HHO gas is that the species at 2 and 32 amu detected by mass spectroscopy could, in actuality, be constituted by a mixture of the conventional molecules H_2 and O_2 and a percentage of the same atoms although with the magnecular bond, since the latter are expected to have essentially the same atomic weight than the former. The separation of hydrogen molecules and magnecules is possible via instruments based on magnetic resonance techniques because the conventional hydrogen molecule is diamagnetic (Fig. 14) while the hydrogen magnecule has a distinct magnetic polarity (Fig. 16).

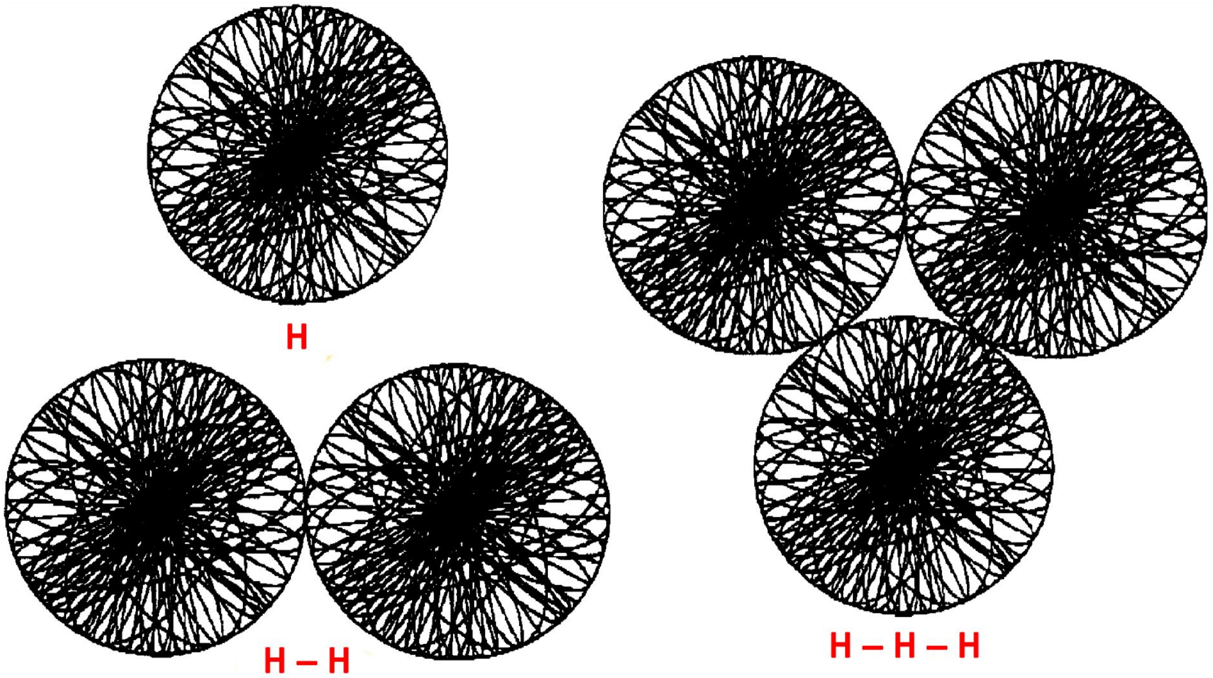

Fig. 15. A conceptual rendering of the conventional interpretation of the species with low atomic weight present in the HHO gas, such as H, H_2 and H_3. The insufficient plausibility of the H3 as originating from a conventional valence bond has been treated in Ref. [3] since valence bonds are only possible for electron pairs and not for triplets.

It is easy to see that the magnecular hypothesis on the chemical structure of the HHO gas permits a quantitative interpretation of all anomalous species reported in the preceding section.

Let's denote the conventional valence bond with the usual symbol "-" and the magnecular bond with the symbol "×". According to this notation, H_2 =H–H represents the molecule of Fig. 15 while H × H represents the magnecule of Fig. 16. Molecular bonds are notoriously restricted to valence pairing, in the sense that no additional atom can be bonded when all available valence pairs are coupled. By contrast, magnecular bonds do not have such a restriction, in the sense that atoms can indeed be added to a magnecule under the sole condition of the availability of opposite magnetic polarizations.

Needless to say, for the HHO gas at ambient temperature and pressure, the stability of the magnecular clusters is inversely proportional to the number of their constituents. As a result, magnecular clusters with relatively low atomic weight are expected to exist in significant percentages, while those with large atomic weight are expected to be present at best in parts per million.

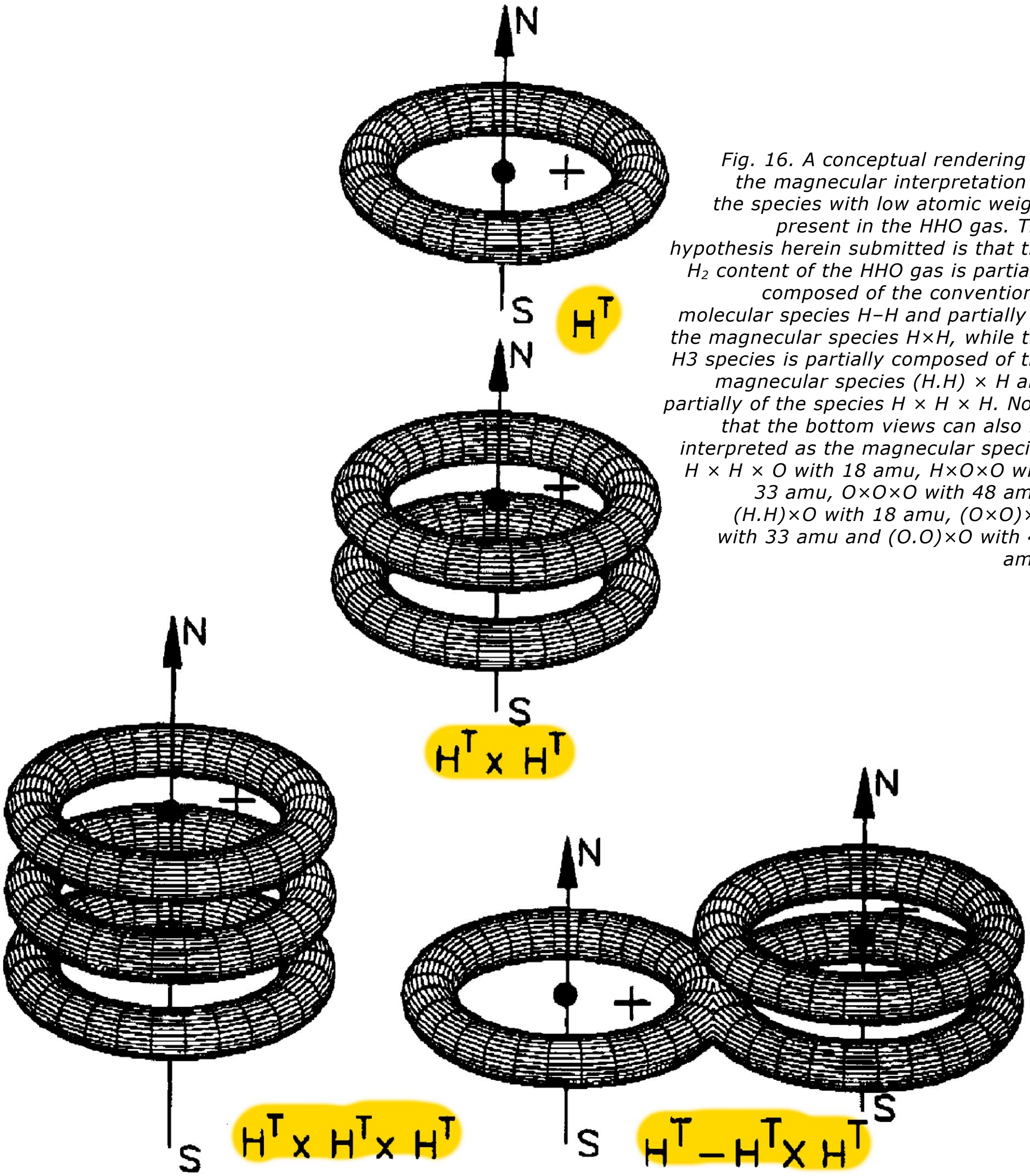

Fig. 16. A conceptual rendering of the magnecular interpretation of the species with low atomic weight present in the HHO gas. The hypothesis herein submitted is that the H_2 content of the HHO gas is partially composed of the conventional molecular species H–H and partially of the magnecular species H×H, while the H3 species is partially composed of the magnecular species (H.H) × H and partially of the species H × H × H. Note that the bottom views can also be interpreted as the magnecular species H × H × O with 18 amu, H×O×O with 33 amu, O×O×O with 48 amu, (H.H)×O with 18 amu, (O×O)×H with 33 amu and (O.O)×O with 48 amu.

Since valence bonds are only possible for electron pairs, while magnecular bonds admit a (reasonably) open number of constituents, the magnecular hypothesis for the structure of the HHO gas permits indeed a plausible interpretation of all its anomalous constituents.

As a result, the magnecular hypothesis permits the following interpretations of the species composing the HHO gas: the species with 3 amu is interpreted as a combination of the magnecules H×H×H or (H.H)×H; the species with 4 amu is interpreted as a combination of (H.H)×(H.H), (H.H)×H×H, or H×H×H×H, heavier magnecular bonds solely of hydrogen atoms being unstable due to collisions; the species with 17 amu is interpreted as a combination of the traditional dimer H–O and the magnecular bond H×O; the species with 33 amu is interpreted as a mixture of (O.O) × H, (H.O) × O and O×O×H; the species with 34 amu is interpreted as a mixture of (H.H) × (O.O) × (H.H) × H and similar configurations; the species with 35 amu is interpreted as a mixture of (O.O) × (H.H) × (H.H) × H and equivalent configurations (see Fig. 16); and other magnecular species in progressively smaller percentages. Besides a quantitative interpretation of the chemical structure of all species contained in the HHO gas, as well as of its anomalous thermal content and adhesion, perhaps the biggest contribution of the magnecular hypothesis is a quantitative interpretation of the formation of the HHO gas despite the lack of the needed evaporation or separation energy.

Recall that nature has set the water molecule H_2O = H–O–H in such a way that its H atoms do not have the spherical distribution, and have instead precisely the polarized distribution of Fig. 13 bottom along a toroid whose symmetry plane is perpendicular to that of the H–O–H plane, as depicted in Fig. 17, and established in the technical literature (see, e.g., Ref. [1a]).

It is also known that the H–O–H molecule at ambient temperature and pressure, even though with a null total charge, has a high electric polarization (namely, a deformation of electric charge distributions) with the predominance of the negative charge density localized in the O atom and the complementary predominant positive charge density localized in the H atoms [1a]. This feature causes a repulsion of the H atoms due to their predominantly positive charges, resulting in the characteristic angle of (about) 105° between the H–O and O–H dimers as depicted in Fig. 18.

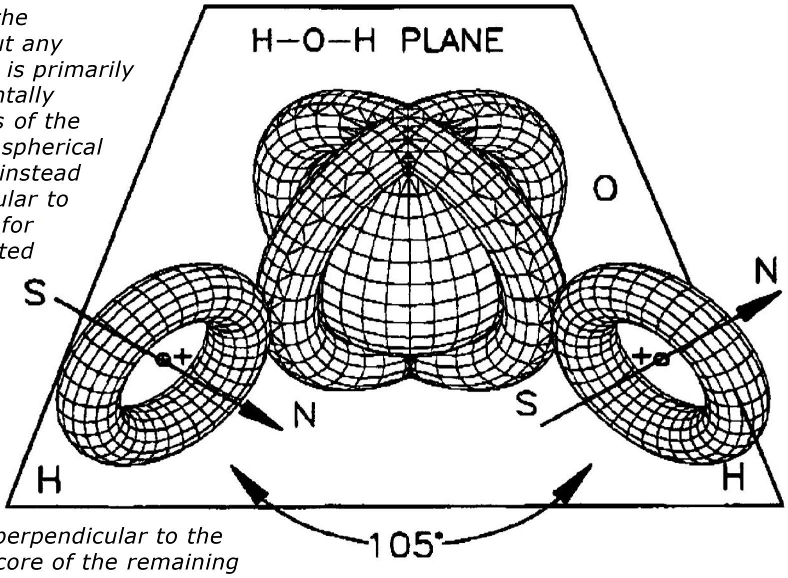

Fig. 17. A conceptual rendering of the conventional water molecule without any electric polarization. This rendering is primarily intended to illustrate the experimentally established feature that the orbitals of the two hydrogen atoms do not have a spherical distribution as in Fig. 13, but have instead a distribution essentially perpendicular to the H–O–H plane (see Ref. [1a,1b] for details) here conceptually represented with a toroid. The strong valence bond needed to achieve the first known exact representation of the experimental data of the water molecule achieved in Ref. [3] requires that the corresponding orbitals of the valence electrons of the oxygen have a corresponding polarized distribution here also conceptually depicted with toroids perpendicular to the H–O–H plane around the spherical core of the remaining electrons of the oxygen atom.

It is well established in quantum mechanics that toroidal polarizations of the orbitals of the hydrogen atom as in the configuration of Fig. 13 create very strong magnetic fields with a symmetry axis perpendicular to the plane of the toroid, and with a value of said magnetic field sufficient for the creation of the new chemical species of magnecules [3]. It then follows that, in the natural configuration of the H–O–H molecule, the strong electric polarization caused by the oxygen is such to weaken the magnetic field of the toroidal polarization of the H-orbital resulting in the indicated repulsion of the two H-atoms in the H–O–H structure.

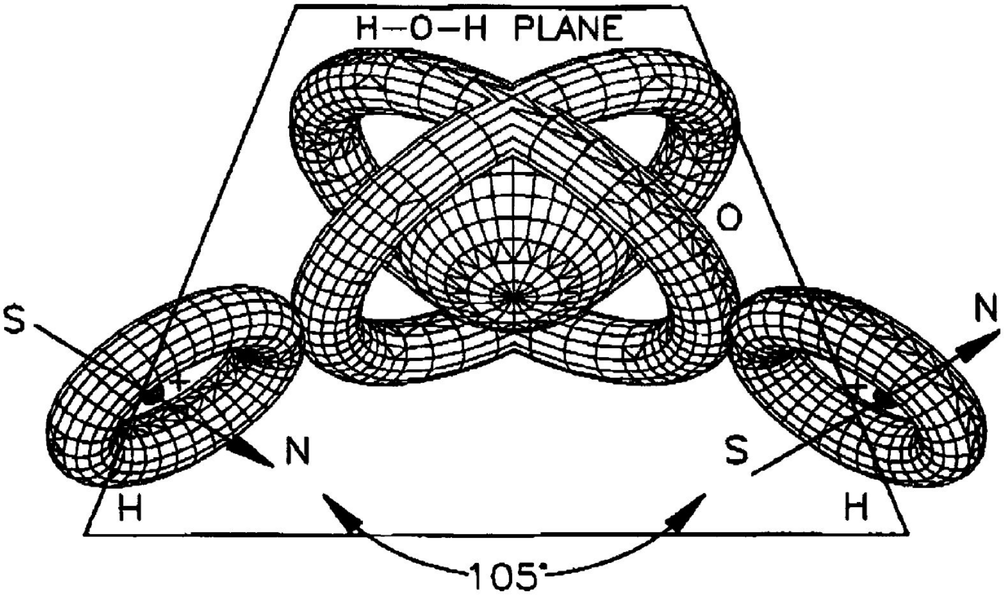

Fig. 18. A conceptual rendering of the conventional water molecule of Fig. 16, this time with the electric polarization as occurring in nature. Note the consequential the predominance of a positive charge in the two hydrogen atoms that is responsible in part for the angle of 105° between the two H–O radicals.

Fig. 19. A conceptual rendering of the central hypothesis submitted for the first time in this paper, namely, the H–O–H molecule in which all electric polarizations have been removed, with the consequential collapse of the two polarized H-atoms one into the other due to their neutral charge and strongly attractive opposing magnetic polarities. This hypothesis permits a quantitative interpretation of the transition of state from liquid to gas achieved by the HHO electrolyzers via processes structurally different than evaporation energy. In fact, unlike the configuration of Fig. 16, that of this figure can only exist at the gaseous state due to the loss of the processes permitting the liquid state, such as hydrogen bridges between pairs of water molecules. It should be noted that the configuration here depicted is unstable and decomposes into atomic oxygen, as detected in the HHO gas, plus the new magnecular species H × H that has indeed been detected but it is generally interpreted as H–H.

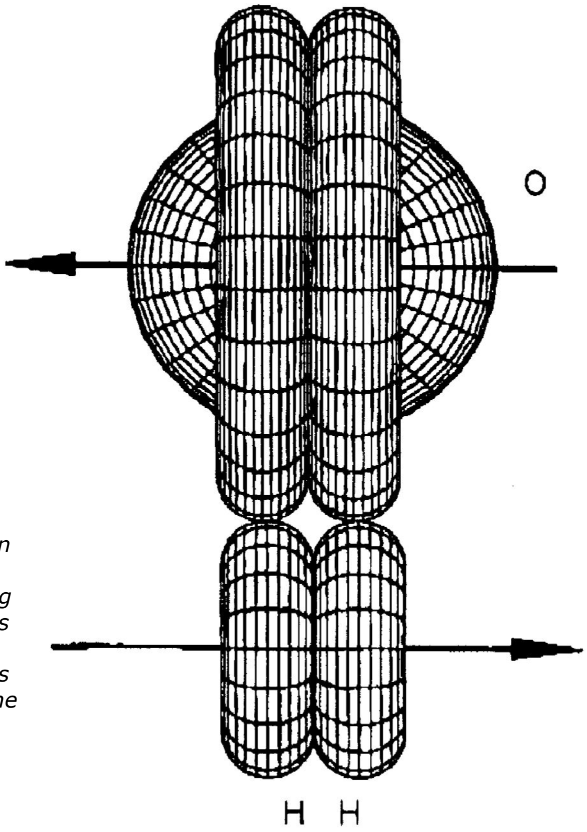

However, as soon as the strong electric polarization of the molecule H–O–H is removed, the strong attraction between opposite polarities of the magnetic fields of the polarized H atoms become dominant over the Coulomb repulsion of the charges, resulting in a new configuration of the water molecule depicted in Figs. 19 and 20 apparently presented in this paper for the first time.

Therefore, a central hypothesis of this paper is that the electrolyzer developed by Hydrogen Technology Applications, Inc., is such to permit the transformation of the water molecule from the conventional H–O–H configuration of Fig. 18 to the basically novel configuration of Fig. 19.

By using the above identified symbols for molecules and magnecules, the conventional water molecule is represented by H–O–H while the new configuration of Fig. 19 is represented by (H×H)–O, where the symbol "-" evidently denotes double valence bond.

The plausibility of the new form of water is supported by the fact that, when H–O–H is liquid, the new species (H × H)–O is expected to be gaseous. This is due to various reasons, such as the fact that the hydrogen is much lighter than the oxygen in the ratio 1 to 16 amu. As a result, the new species (H × H)–O is essentially equivalent to ordinary gaseous oxygen in conformity with conventional thermodynamical laws, since the transition from the liquid to the gas state implies the increase of the entropy, as well known.

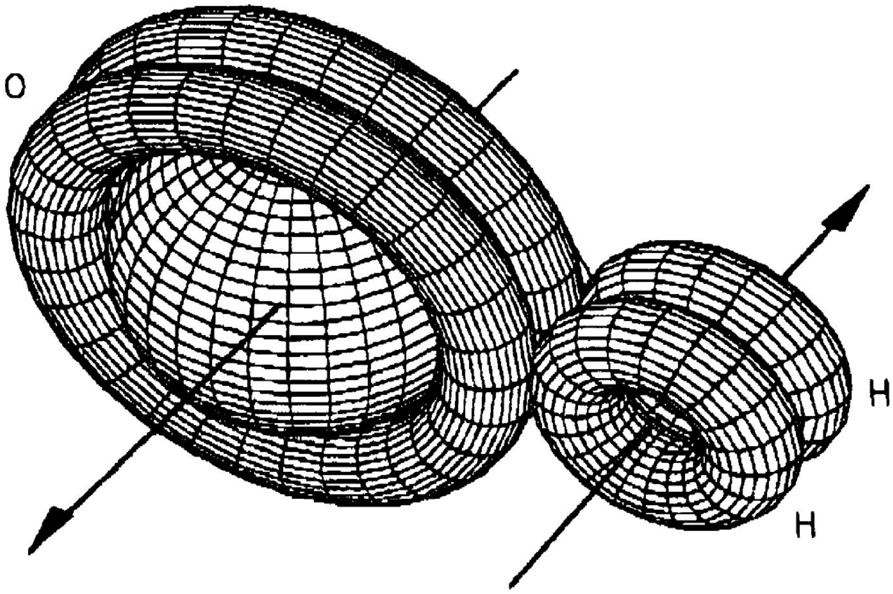

Fig. 20. A conceptual rendering of a perspective view of the central hypothesis submitted for the first time in this paper via Fig. 19, better illustrating the bond via opposing magnetic polarities of the two H-atoms, as well as the unstable character of the configuration due to collision with other species and intrinsic instabilities to be studied in a forthcoming paper.

Alternatively, the loss of electric polarization in the transition from H–O–H to (H × H)–O is expected to cause the loss of the processes permitting the very existence of the water molecule, such as the hydrogen bridges between dimers O–H of different molecules. Transition to a gaseous form is then consequential, thus confirm the plausibility of the new form of water (H × H)–O proposed in this paper.

However, it can also be seen that the new form of water (H×H)=O is unstable, and decomposes in H×H and O. This decomposition is supported by the clear evidence in the HHO gas of atomic oxygen, as well as of the species with 2 amu that is normally interpreted as being H–H, while we suggest the additional possibility that such a species is, at least in part, H × H.

As indicated earlier, samples of the new HHO gas for independent verifications can be readily obtained by contacting the manufacturer Hydrogen Technology Applications, Inc. at their website www.hytechapps.com. Nevertheless, interested colleagues should be aware of the fact that the experimental detection of magnecules is rather difficult since it requires analytic instruments and methods different than those currently used to detect molecules. Vice versa, analytic methods so effective to detect molecules generally reveal no magnecules, and this explains their lack of detection since the discovery of molecules in the mid of the 19th century.

An analytic equipment developed for molecules that is also effective for the detection of gaseous (liquid) magnecules is given by a Gas (Liquid) Chromatographer Mass Spectrometer necessarily equipped with InfraRed Detector for gases (GC-MS/IRD) or with UltraViolet Detector for liquids (LC-MS/UVD).

Let’s recall that large clusters (of the order of hundreds of amu or more) cannot be constituted by molecules when without an IR signature for gases or a UV signature for liquids, because that would require perfect spheridicity that is prohibited by nature for a large number of constituents.

The detection of a magnecule requires its identification, firstly, with a peak in the MS that must result to be unknown following the computer search among all known molecules and, secondly, that peak must show no IR or UV signature at its amu value. The latter condition explains the need for a GC-MS (or LC-MS) necessarily equipped with IRD (UVD). In fact, if the same species is tested with an IRD (or UVD) disjoint from the MS, the IRD (UVD) is not generally focused on the selected MS peak at its amu value, resulting in the detection of a variety of signatures of conventional molecular species that, in reality, are the constituents of the considered magnecule because having amu values that are a fraction of that of the MS peak.

For additional difficulties in the detection of magnecules, interested colleagues are suggested to consult monograph [3], chapter 8.

In conclusion, the experimental data presented in this paper confirm the existence of a new chemical species whose bond cannot credibly be of valence type. Colleagues may prefer nomenclatures other than “magnecules” to distinguish the new species from molecules, such as “supermolecules” due to its predictably easier reception by the scientific community. Nevertheless, it is time for chemistry to identify in all the necessary technical details the attractive character of conventional valence bond as done, apparently for the first time, by Santilli and Shillady with their new “strong valence bond” [3,5a,b]. Nomenclatures such as “supermolecules” may be preferable on academic grounds, although such a nomenclature would leave the nature of the bond fundamentally unsolved. This author has selected the name of magnecules because of the precise identification of the nature and numerical value of the attractive force causing the bond [3,5c,d].

References

[1a] Eisenberg D, Kauzmann W. The structure and properties of water.
Oxford: Oxford University Press; 1969.

[1b] Plambeck JA. Electroanalytical chemistry, principles and applications.
2nd ed., New York: Wiley; 1982.

[2] Yull Brown. US patent number 4,014,777 issued on March 29, 1977,
and US patent number 4,081,656 issued on March 28, 1978.

[3] Santilli RM. Foundations of hadronic chemistry with applications to new clean energies and fuels.
Boston, Dordrecht, London: Kluwer Academic Publisher; 2001.

[5a] Santilli RM, Shillady DD. Int J Hydrogen Energy 1999;24:943.

[5b] Santilli RM, Shillady DD. Int J Hydrogen Energy 2000;25:173.

[5c] Santilli RM. Hadronic J 1998;21:789.

[5d] Kucherenko MG, Aringazin AK. Hadronic J 1998;21:895.

[5e] Santilli RM. http://www.magnegas.com [32]

[5f] Santilli RM. Int J Hydrogen Energy 2003;28:177.

Further Reading

[4a] Landau LD, Lifshitz EM. Quantum mechanics: non-relativistic theory.
3rd ed., Oxford: Pergamon; 1989.

[4b] Ruder H, Wunner G, Herold H, Geyer F. Atoms in strong magnetic fields.
Berlin, Heidelberg, New York: Springer; 1994.

[4c] Aringazin AK. Hadronic J 2001;24:395 (outlined in Appendix 8A).

Interesting Documents

- R. M. Santilli and A. K. Aringazin (2001), "Structure and Combustion of Magnegases", arXiv:physics/0112066v1 -- http://arxiv.org/abs/physics/0112066v1
- In 2003, Thomas C. Kramer suggested a watercar design based on Santilli's MagneGas, where the gas is generated on board the vehicle. It's Part 7 of his book available in MS Word format from: www.overunity.com/216/watercar-book/ (download each chapter separately).

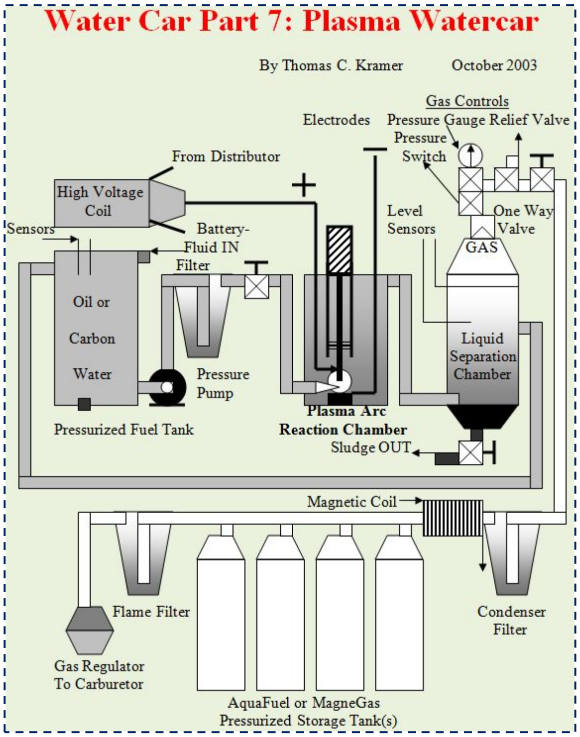

---

[32] They sell industrial gases through the Tampa-based welding distributor, E.S.S.I. Equipment Sales & Service, Inc. – visit www.WeldingSupplyTampa.com

Santilli science papers

- Santilli's complete lectures (2010-2013): www.world-lecture-series.org
- Santilli, Ruggero (1978), "Foundations of Theoretical Mechanics: The inverse problem in Newtonian mechanics" (PDF): http://garrigou.us.to/get/pdf/Foundations%20of%20Theoretical%20Mechanics%20I_%20The%20Inverse%20Problem%20in%20Newtonian%20Mechanics%20-%20Santilli%2C%20Ruggero%20Maria_4395.pdf
New York: Springer-Verlag. OCLC 9020170.
- Santilli, Ruggero (1983), "Foundations of Theoretical Mechanics: Birkhoffian Generalization of Hamiltonian Mechanics" (PDF): http://garrigou.us.to/get/pdf/Foundations%20of%20Theoretical%20Mechanics%20II_%20Birkhoffian%20Generalization%20of%20Hamiltonian%20Mechanics%20-%20Santilli%2C%20Ruggero%20Maria_4393.pdf
Berlin: Springer-Verlag. ISBN 0-387-09482-2.
- Santilli, Ruggero (1984), "Il Grande Grido: Ethical Probe on Einstein's Followers in the U.S.A.: An Insider's View": http://www.scientificethics.org/IlGrandeGrido.htm
Louisville: Alpha Pub. ISBN 0-931753-00-7.
- "Relativistic hadronic mechanics: Nonunitary, axiom-preserving completion of relativistic quantum mechanics", Ruggero Maria Santilli,
Foundations of Physics, **27**, #5 (May 1997), pp. 625–729.
DOI 10.1007/BF02550172 -- http://dx.doi.org/10.1007/BF02550172
- Santilli, Ruggero (2001), "Foundations of Hadronic Chemistry: with Applications to New Clean Energies and Fuels": http://www.i-b-r.org/Hadronic-Mechanics.htm
Berlin: Springer. ISBN 1-4020-0087-1.
- Santilli, Ruggero (2006), "Isodual theory of antimatter with applications to antigravity, grand unification and cosmology" (PDF): http://garrigou.us.to/get/pdf/Isodual%20Theory%20of%20Antimatter%20with%20applications%20to%20Antigravity%2C%20Grand%20Unification%20and%20Cosmology%20-%20Santilli%2C%20Ruggero%20Maria_4397.pdf
Dordrecht: Springer. ISBN 1-4020-4518-2.
- Santilli makes funny faces when interviewed about modern cosmology: www.i-b-r.org/Prof-Santilli-faces.html
I love his attitude!

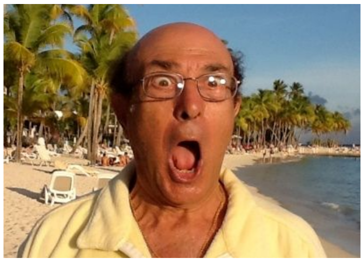

Image: Agence de la Recherche Scientifique, Division de Guadalupe, at the Club med, Guadalupe, April 9, 2013 published by Institute for basic Research

Chapter 8.

THEORY: Puharich — How He Extracted Free-Energy from Water

WORLD EXPERT

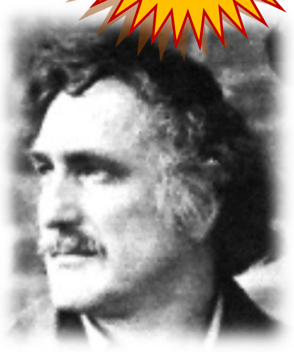

Andrija (Henry) Puharich, M.D. (1918-1995) was born in Chicago to poor Yugoslav immigrants. He was a US Army officer, a medical doctor, parapsychology researcher, medical inventor, author – and a famous Waterfuel inventor to top it all off. Apart from his Waterfuel Patents, Puharich also became known as the person who brought Israeli Uri Geller and Dutch-born Peter Hurkos to the USA for scientific investigation. The legends tell that in the 1970's Puharich drove his motor home for hundreds of thousands of miles using only water as fuel; at a mountain pass in Mexico, he collected snow to fill up his tank… This chapter has the only article he wrote on his discoveries, plus his Patent to make his legacy complete as much as we have it today.

Cutting The Gordian Knot[33] of the Great Energy Bind

It is hardly necessary to weigh the value of the World Energy bank account for any sophisticated person, these days. It is grim. The oil reserves will dwindle away in a score of years or so, and the coal reserves will be gone in some twelve score years. *(The interested reader should refer to the special issue of* ***National Geographic, "Energy", February 1981****.)*

This is not to say that the outlook is hopeless. There is an abundance of alternative energy sources, but the economics of development and exploitation present an enormous short term strain on the world political and banking resources.

Visionary scientists tell us that the ideal fuel in the future will be as cheap as water, that it will be non-toxic both in its short term, and in its long term effects, that it will be renewable in that it can be used over and over again, that it will be safe to handle, and present minimal storage and transportation problems and costs. And finally that it will be universally available anywhere on earth.

---

[33] The "Gordian Knot" is a legendary knot-puzzle from Gordium – a capital city in ancient Turkey – associated with Alexander the Great. "Cutting the Gordian knot" is often used as a metaphor for disentangling an intractable problem by a bold stroke.

What is this magical fuel, and why is it not being used? ***The fuel is water.*** It can be used in its fresh water form. It can be used in its salt water form. It can be used in its brackish form. It can be used in its snow and ice form. When such water is decomposed by electrolytic fission into hydrogen and oxygen gases, it becomes a high energy fuel with three times the energy output which is available from an equivalent weight of high grade gasoline.

Then why is water not being used as a fuel? The answer is simple. It costs too much with existing technology to convert water into gases hydrogen and oxygen. The basic cycle of using water for fuel is described in the following two equations, familiar to every high school student of Chemistry:

$$H_2O \rightarrow \frac{\dfrac{\text{electrolysis}}{+\,249.68\text{Btu}}}{\Delta G} \rightarrow H_2 + (\tfrac{1}{2})O_2$$

per mole[34] of water (1)

This means that it requires 249.688 BTU of energy (from electricity) to break water by electrical fission into the gases hydrogen and oxygen.

$$H_2 + (\frac{1}{2})O_2 \rightarrow \text{catalyst} \rightarrow H_2O - \Delta H302.375$$

per mole of water[35]. (2)

This means that 302.375 BTU of energy (heat or electricity) will be released when the gases, hydrogen and oxygen, combine. The end product (the exhaust) from this reaction is water. Note that more energy (under ideal conditions) is released from combining the gases than is used to free them from water. It is known that under ideal conditions it is possible to get some 20% more energy out of reaction (2) above, than it takes to produce the gases of reaction (1) above. Therefore, if reaction (1) could be carried out at 100% efficiency, the release of energy from reaction (2) in an optimally efficient engine (such as a low temperature fuel cell), there would be a net energy profit which would make the use of water as a fuel an economically feasible source of energy .

The cost of producing hydrogen is directly related to the cost of producing electricity. Hydrogen as produced today is generally a byproduct of off-peak-hour electrical production in either nuclear or hydroelectric plants. The electricity thus produced is the cheapest way of making hydrogen. We can compare the cost of production of electricity and the cost of producing hydrogen. The following table is adapted from Penner (Ref. 2) whose data

---

[34] *One mole (of water) = 18 gram*

[35] Penner, S.S. & L. Iceman: *Non Nuclear Technologies*, Vol II, Addison-Wesley Publishing Company, 1977, Chap. 11, and Table 11.1-2 (Page 132).

source is based on Federal Power Commission, and American Gas Association Figures of 1970 and on a 1973 price evaluation (just before OPEC[36] oil price escalation).

Table 1: ***Relative*** *Prices in Dollars per* 10^6 *BTU* (British Thermal units, see more data below) @ 9.1 mils/kWh

Cost Component	**Electricity**	**Electrolytically Produced Hydrogen**
Production	2.67 (b)	2.95 to 3.23 (b)
Transmission	0.61	0.52 (c)
Distribution	1.61	0.34
Total Cost	$ 4.89	$ 3.81 to $4.09

← These are 1977 costs... but you get the point.

If we compare only the unit cost of production of electricity vs. Hydrogen from the above table:

$$\frac{10^6 BtuH_2}{10^6 BtuEl.} = \frac{\$3.23}{\$2.67} = 1.209, or\ 20.9\%$$ higher cost, H_2

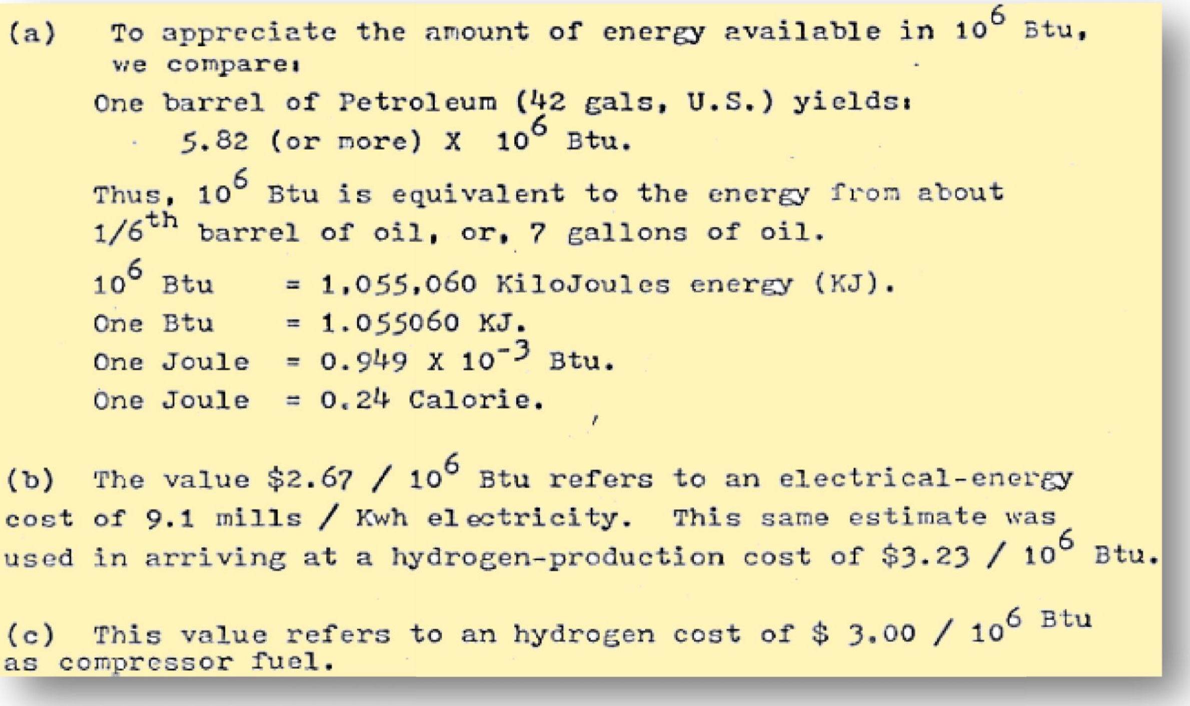

(a) To appreciate the amount of energy available in 10^6 Btu, we compare:

One barrel of Petroleum (42 gals, U.S.) yields:
5.82 (or more) X 10^6 Btu.

Thus, 10^6 Btu is equivalent to the energy from about 1/6th barrel of oil, or, 7 gallons of oil.

10^6 Btu = 1,055,060 KiloJoules energy (KJ).
One Btu = 1.055060 KJ.
One Joule = 0.949 X 10^{-3} Btu.
One Joule = 0.24 Calorie.

(b) The value \$2.67 / 10^6 Btu refers to an electrical-energy cost of 9.1 mills / Kwh electricity. This same estimate was used in arriving at a hydrogen-production cost of \$3.23 / 10^6 Btu.

(c) This value refers to an hydrogen cost of \$ 3.00 / 10^6 Btu as compressor fuel.

---

[36] OPEC: Organization of the Petroleum Exporting Countries. In other words: the oil cartel.

It must also be noted that the price of natural gas is much cheaper than either electricity or hydrogen, but because of the price fluctuations due to recent deregulation of gas, it is not possible to present a realistic figure. In the opinion of Penner, if the hydrogen production cost component of its total cost could be reduced three fold, it would become a viable alternate energy source. In order to achieve such a three-fold reduction in production costs, several major breakthroughs would have to occur.

(1) **ENDERGONIC**[37] **REACTION.** A technological breakthrough that permits 100% conversion efficiency of water by electrolysis fission into the two gases, Hydrogen as fuel and Oxygen as oxidant.

(2) **HYDROGEN PRODUCTION,** in situ[38]. A technological breakthrough that eliminates the need and cost of hydrogen liquefaction and storage, transmission, and distribution, by producing the fuel in situ, when and where needed.

(3) **EXERGONIC**[39] **REACTION.** A technological breakthrough which yields a 100% efficient energy release from the combination of hydrogen and oxygen into water in an engine that can utilize the heat, steam, or electricity thus produced.

(4) **ENGINE EFFICIENCY.** By a combination of the breakthroughs outlined above, (1), (2), and (3) utilized in a highly efficient engine to do work, it is possible to achieve a 15% to 20% surplus of energy return over energy input, theoretically.

It is of interest to record that a new invention is now being developed to realise the above outlined goal of cheap, clean renewable and high grade energy. A Thermodynamic Device has been invented which produces hydrogen as fuel, and oxygen as oxidant, from ordinary or from sea water, eliminating the cost and hazard of liquefaction, storage, transmission, and distribution. The saving of this aspect of the invention alone reduces the total cost of hydrogen by about 25%.

This Thermodynamic Device is based on a new discovery – the efficient electrolytic fission of water into hydrogen gas and oxygen gas by the use of low frequency alternating currents as opposed to the conventual use of direct current, or ultra-high frequency current today. Such gas production from water by electrolytic fission approaches 100% efficiency under laboratory conditions and measurements. ***No laws of physics are violated in this process.***

This Thermodynamic Device has already been tested at ambient pressures and temperatures from sea level to an altitude of 10,000 feet above sea level without any loss of its peak efficiency. The device produces two types of gas bubbles; one type of bubble contains hydrogen gas; the other type contains oxygen gas. The two gases are thereafter easily separable by passive membrane filters to yield pure hydrogen gas, and pure oxygen gas.

---

[37] An endergonic reaction (such as photosynthesis) is a reaction that requires energy to be driven (energy is absorbed by the process).

[38] In situ: Situated in its original, natural, or existing place (from Latin: in position).

[39] An exergonic reaction (such as cellular respiration) is a reaction that loses energy during the process of the reaction.

The separate gases are now ready to be combined in a chemical fusion with a small activation energy such as that from a catalyst or an electrical spark, and yield energy in the form of heat, or steam, or electricity – as needed.

When the energy is released by the chemical fusion of hydrogen and oxygen, the exhaust product is clean water. The water exhaust can be released into nature and then renewed in its energy content by natural processes of evaporation, solar irradiation in cloud form, an subsequent precipitation as rain on land or sea, and then collected again as a fuel source. Or, the exhaust water can have its energy content pumped up by artificial processes such as through solar energy acting through photocells. Hence, the exhaust product is both clean and renewable.

The ***fuel*** hydrogen, and the ***oxidant*** oxygen, can be used in any form of heat engine as an energy source if economy is not an important factor. But the practical considerations of maximum efficiency dictate that a low temperature fuel cell with its direct chemical fusion conversion from gases to electricity offers the greatest economy and efficiency from small power plants (less than 5 kilowatts).

For large power plants, steam and gas turbines are the ideal heat engines for economy and efficiency. With the proper engineering effort, automobiles could be converted rather easily to use water as the main fuel source.

(2) An Elementary Introduction to the Design & Operation of the Thermodynamic Device to Electrolyze Water with AC[40]

The Thermodynamic Device (TD) is made up of three principal components:

- Component I: An electrical function generator, that energizes a water cell,
- Component II: The Thermodynamic Device (TD),
- Component III: A weak electrolyte.

COMPONENT I: The Electrical Function Generator*, see Fig.1*

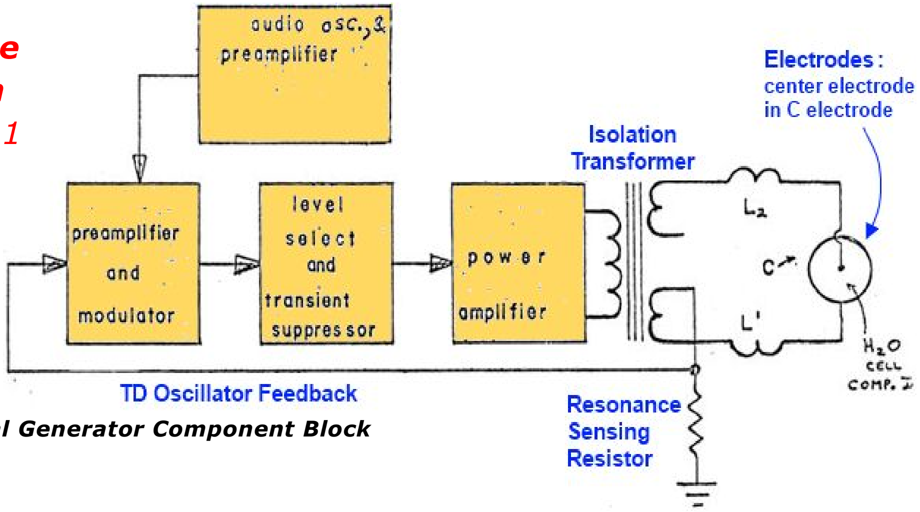

Figure 1: Signal Generator Component Block

---

[40] Alternating Current

This electronic device has a complex alternating current output consisting of an audio frequency[41] (range 20 to 200 Hz) amplitude modulation of a carrier wave (range: 200 to 100,000 Hz). The output is connected by two wires to Component II at the center electrode, and at the ring electrode. See Fig 1. The impedance of this output signal is continuously being matched to the load which is the water solution in Component II.

COMPONENT II: The Thermodynamic Device (TD)*, see Fig.2 below.*

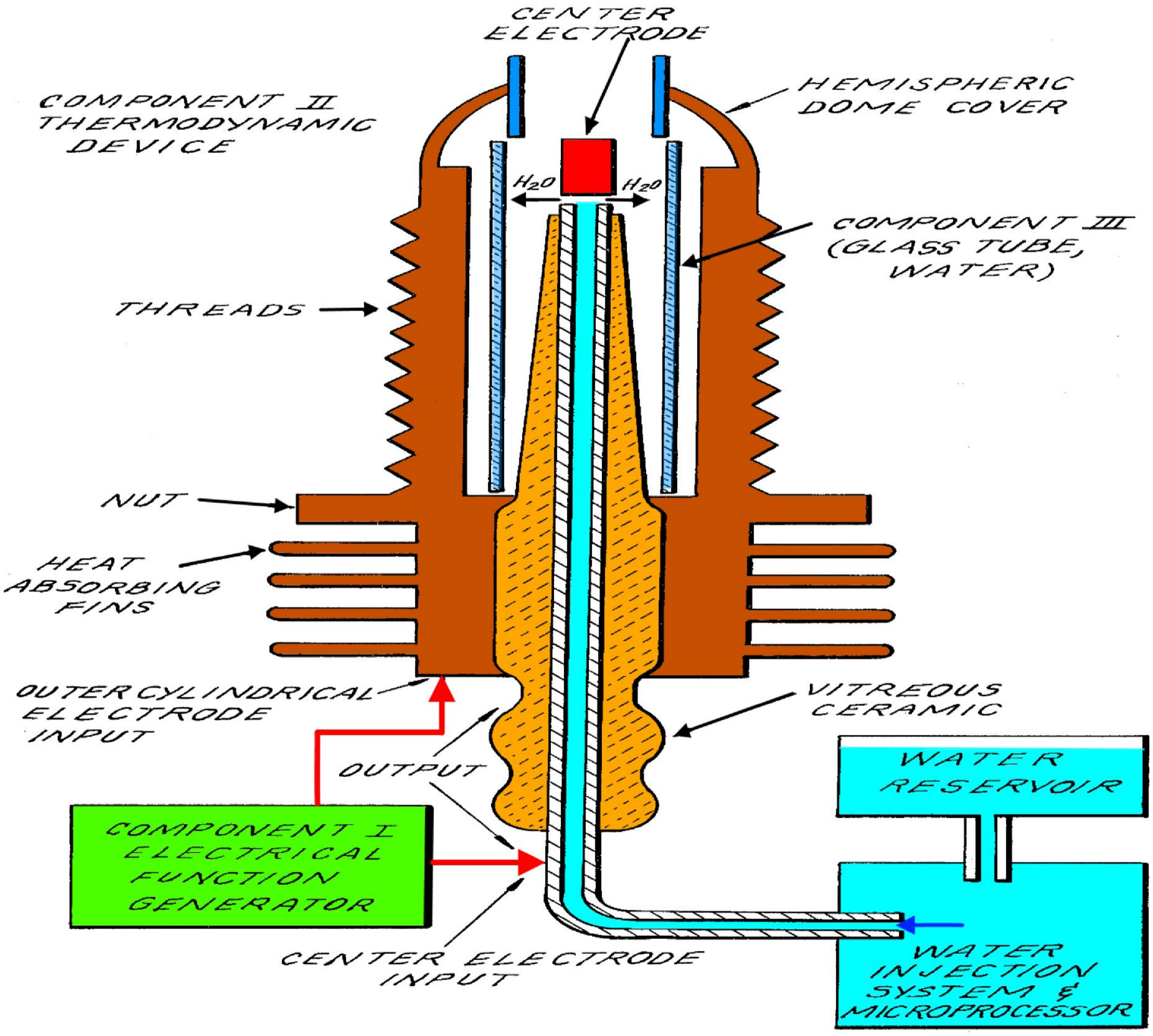

Figure 2: Thermodynamic Device (TD)

The TD is fabricated of metals and ceramic in the geometric form of a coaxial cylinder made up of a centered hollow tubular electrode which is surrounded by a larger tubular steel cylinder. These two electrodes comprise the coaxial electrode system energised by Component I. The space between the two electrodes is, properly speaking, Component III which contains the water solution to be electrolysed.

---

[41] The Waterfuel film "Chain Reaction" hints strongly at this! See description in Chapter 38.

The center hollow tubular electrode carries water into the cell, and is further separated from the outer cylindrical electrode by a porous ceramic vitreous material. The space between the two electrodes contains two lengths of tubular Pyrex glass, shown in Figures 2 and 3. The metal electrode surface in contact with the water solution are coated with a nickel alloy.

COMPONENT III: The weak electrolyte water solution, *see Fig.3 below.*

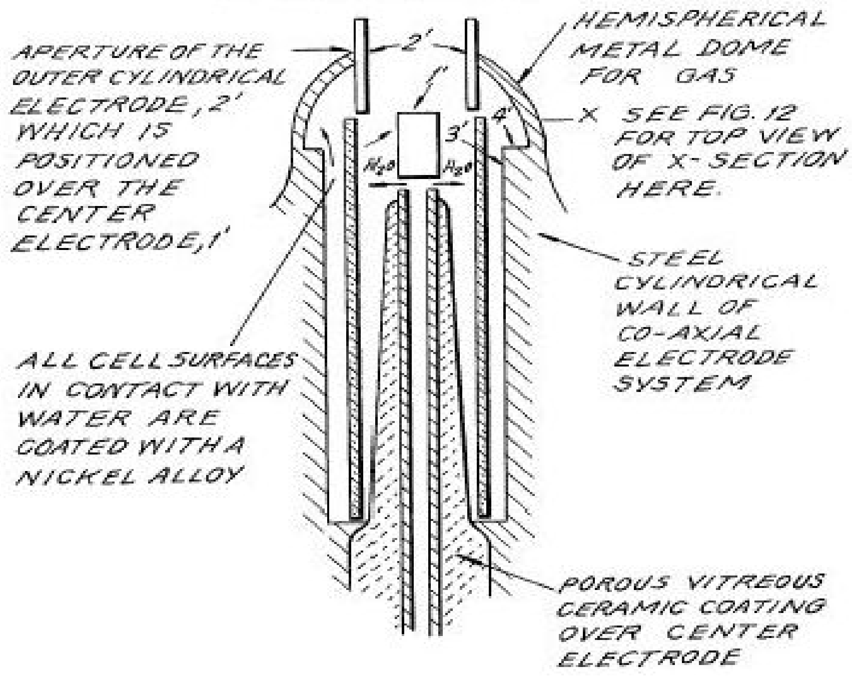

Figure 3: The Water Cell Section of Component II

This consists of the water solution, the two glass tubes, and the geometry of the containing wall of Component II. It is the true load for Component I, and its electrode of Component II.

The Component III water solution is more properly speaking, ideally a 0.1540 M Sodium Chloride solution, and such is a weak electrolyte. In Figure 4 we show the hypothetical tetrahedral structure of water molecule, probably in the form in which the complex electromagnetic waves of Component I to see it. The center of mass of this tetrahedral form is the oxygen atom. The geometric arrangement of the p electrons of oxygen probably determine the vectors i (L_1) and i (L_2) and i (H_1) and i (H_2) which in turn probably determine the tetrahedral architecture of the water molecule.

The *p* electron configuration of oxygen is shown in Figure 5. Reference to Figure 4 shows that the diagonal of the right side of the cube has at its corner terminations the positive charge hydrogen (H+) atoms; and that the left side of the cube diagonal has at its corners the lone pair electrons, (e^-). It is to be further noted that this diagonal pair has an orthonormal relationship.

Figure 4: The Water Molecule in Tetrahedral[42] Form

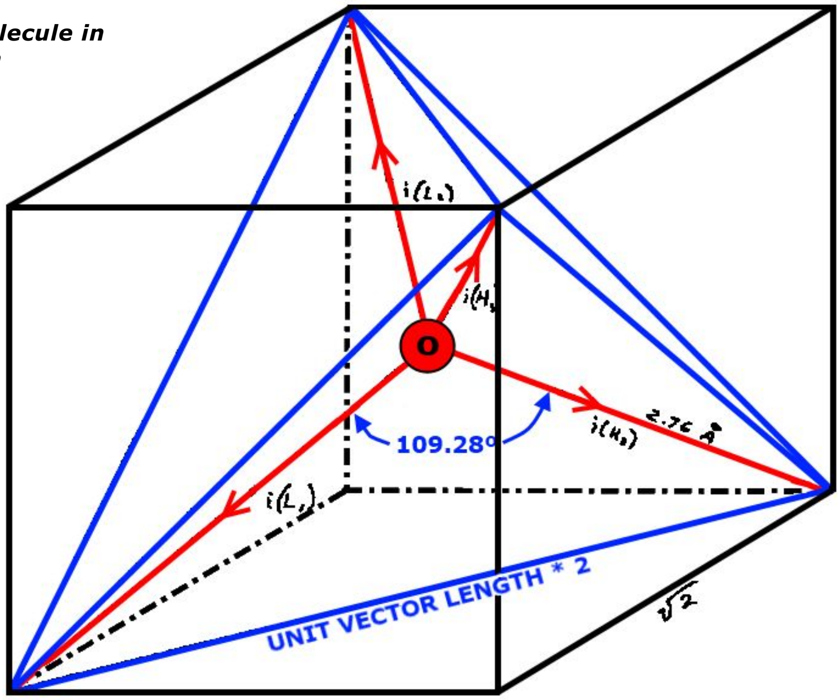

Hydrogen bonding occurs only along the four vectors pointing to the four vertices of a regular tetrahedron, and in the above drawing we show the four unit vectors along these directions originating from the oxygen atoms at the center. *i*(H_1) and *i*(H_2) are the vectors of the hydrogen bonds formed by the molecule *i* as a donor molecule. These are assigned to the lone pair electrons. Molecules *i* are the neighboring oxygen atoms at each vertex of the tetrahedron.

Figure 5: Electron Orbitals

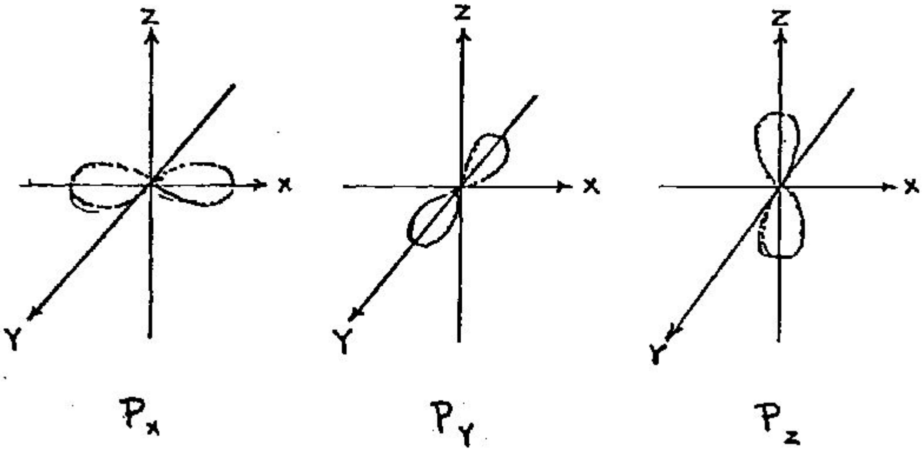

Arrows indicate pairing of electrons in spin

Element	Electron Configuration
H	$1s^1$
O	$1s^2 \downarrow 2s^2 \downarrow 2p^4 \downarrow$ $(2p^2)(2p^1)(2p^1)$ x y z

---

[42] Tetrahedron: a polyhedron with four faces.

(3) Electrothermodynamics

We will now portray the complex electromagnetic wave as the tetrahedral water molecule sees it. The first effect felt by the water molecule is in the protons of the vectors, i (H_1) and i (H_2). These protons feel the 3-second cycling of the amplitude of the carrier frequency and its associated side bands as generated by Component I. This sets up a rotation moment of the proton magnetic moment which one can clearly see on the XY plot of an oscilloscope, as an hysteresis loop figure.

However, it is noted that this hysteresis loop does not appear in the liquid water sample until all the parameters of the three components have been adjusted to the configuration which is the novel basis of this device. The hysteresis loop gives us a vivid portrayal of the nuclear magnetic relaxation cycle of the proton in water.

The next effect felt by the water molecule is the Component I carrier resonant frequency, F_o. At the peak efficiency for electrolysis the value of F_o is 600 Hz +/- 5 Hz.

This resonance however is achieved through control of two other factors. The first is the molal concentration of salt in the water. This is controlled by measuring the conductivity of the water through the built in current meter of Component I. There is maintained an ideal ratio of current to voltage $I/E = 0.01870$ which is an index to the optimum salt concentration of 0.1540 Molal.

The second factor which helps to hold the resonant which helps to hold the resonant frequency at 600 Hz is the gap distance of Y, between the centre electrode, and the ring electrode of Component II.

This gap distance will vary depending on the size scale of Component II, but again the current flow, I, is used to set it to the optimal distance when the voltage reads between 2.30 (rms) volts, at resonance F_o, and at molal concentration, 0.1540. The molal concentration of the water is thus seen to represent the electric term of the water molecule and hence its conductivity.

The amplitude modulation of the carrier gives rise to side bands in the power spectrum of the carrier frequency distribution. It is these side bands which give rise to an acoustic vibration of the liquid water, and it is believed to the tetrahedral water molecule. ***The importance of the phonon effect – the acoustic vibration of water in electrolysis – was discovered in a roundabout way.*** Research work with Component I had earlier established that it could be used for the electro-stimulation of hearing in humans. When the output of Component I is comprised of flat circular metal plates applied to the head of normal hearing humans, it was found that they could hear pure tones and speech. Simultaneously, acoustic vibration could also be heard by an outside observer with a stethoscope placed near one of the electrodes on the skin. It was observed that the absolute threshold of hearing could be obtained at 0.16 mW (rms), and by calculation that there was an amplitude of displacement of the eardrum of the order of 10^{-11} and a corresponding amplitude of the cochlear basilar membrane of 10^{-13} meter. Corollary to this finding, I was able to achieve the absolute reversible threshold of electrolysis at a power level of 0.16 mW (rms). By carrying out new calculations I was able to show that the water was being vibrated with a displacement of the order of 1 Angstrom (= 10^{-10} meters). This displacement is of the order of the diameter of the hydrogen atom.

Thus it is possible that the acoustic phonons generated by audio side bands of the carrier are able to vibrate particle structures within the unit water tetrahedron.

We now turn to the measurement problem with respect to efficiency of electrolysis. There are four means that can be used to measure the reactant product of water electrolysis . For simple volume measurements one can use a precision nitrometer[43] such as the Pregl[44] type. For both volume and quantitative analysis one can use the gas chromatography with thermal conductivity detector. For a continuous flow analysis of both volume and gas species the mass spectrometer is very useful. For pure thermodynamic measurements the calorimeter is useful. In our measurements, all four methods were examined, and it was found that the mass spectrometer gave the most flexibility and the greatest precision. In the next section we will describe our measurement using the mass spectrometer.

Protocol

(4) Methodology for the Evaluation of the Efficiency of Water Decomposition by Means of Alternating Current Electrolysis

INTRODUCTION

All systems used today for the electrolysis of water into hydrogen as fuel, and oxygen as oxidant apply direct current to a strong electrolyte solution. These systems range in efficiency from 50% to 71%. The calculation of energy efficiency in electrolysis is defined as follows:

"The energy efficiency is the ration of the energy released from the electrolysis products formed (when they are subsequently used) to the energy required to affect electrolysis." (Ref. 1)

The energy released by the exergonic process under standard conditions:

$$H_2(g) + (½)\ O_2(g) \rightarrow H_2O = 302.375\ \text{BTU}$$

which is 68.315 Kcal/mol, or 286,021 Joules/mol, and is numerically equal to the enthalpy charge (ΔH) for the indicated process. On the other hand the minimum energy (or useful work input) required at constant temperature and pressure for electrolysis equals the Gibbs free energy change (ΔG). ***(Ref. 2)***

---

[43] An apparatus for measuring the amount of nitrogen (or nitrogen compounds) in a substance or mixture.

[44] At the time he wrote it, the Pregl used to be the conventional type of micro-nitrometer, named after chemist and physician Fritz Pregl (1869-1930).

(Ref. 1) S.S. Penner and L. Iceman: "Energy", Volume II , Chapter 11. "Non Nuclear Energy Technologies" (Revised Edition). Addison-Wesley Publishing Company, Inc., Reading, Massachusetts, 1977

(Ref. 2) S.S. Penner: "Thermodynamics", Chapter 11. Addison-Wesley Publishing Company, Inc., Reading, Massachusetts, 1968.

Penner shows that there is a basic relation derivable from the first and second laws of thermodynamics for isothermal changes which shows that

$\Delta G = \Delta H - T\,\Delta S$ (2)

where ΔS represents the entropy change for the chemical reaction and T is the absolute temperature.

The Gibbs free energy change (ΔG) is also related to the voltage (*e*) required to implement electrolysis by Faraday's equation,

$e = (\Delta G / 23.06\ n)$ volts (3)

where ΔG is in Kcal/mol, and n is the number of electrons (or equivalents) per mole of water electrolysed and has the numerical value 2 in the equation (endergonic process),

$H_2O \rightarrow H_2\,(g) + (½)O_2\,(g) + 56.620$ kcal or + 249.68 BTU (4)

Therefore, according to equation (2) at atmospheric pressure, and 300 degrees K , ΔH = 68.315 kcal/mol or H_2O, and ΔG = 56.620 kcal/mol of H_2O = 236,954 J/mol H_2O for the electrolysis of liquid water.

In view of these thermodynamic parameters for the electrolysis of water into gases, hydrogen and oxygen, we can establish by Eq.(2) numeric values where,

$\Delta G = 236.954$ J/mol H_2O

under standard conditions. Thus

$n = \Delta G$ (J/mol) / ΔGe (J/mol) = <1 (5)

where ΔG_e is the electrical energy input to H_2O (1) in Joules, and ΔG is the Gibbs free energy of H_2O. The conversion between the two quantities is one Watt second (Ws) = one Joule.

Or, in terms of gas volume, as hydrogen, produced and measured,

n = Measured H_2 (cc) / Ideal H_2 (cc) = <1 (6)

In accordance with these general principles we present the methodology followed in evaluating the electrolytic of alternating current on H_2O in producing the gases, hydrogen and oxygen. No attempt has been made to utilize these gases according to the process of Eq.(1). It is to be noted that the process

$$H_2\,(g) + (1/2)O_2\,(g) \rightarrow H_2O\,(g) \qquad (7)$$

yields only 57.796 kcal /mol. Eq.(7) shows that per mole of gases water formed at 300° K, the heat released is reduced from the 68.315 kcal/mol at Eq. (1) by the molar heat of evaporation of water at 300°K (10.5 kcal) and the overall heat release is 57.796 kcal/mol if H_2O (g) is formed at 300° K. (Ref. 1)

In the following sections we describe the new method of electrolysis by means of alternating current, and the exact method and means used to measure the endergonic process of Eq.(4) and the governing Eq.(2) and Eq.(5).

(5) Thermodynamic Measurement

In order to properly couple Component II to a mass spectrometer one requires a special housing around Component II that it will capture the gases produced and permit these to be drawn under low vacuum into the mass spectrometer. Therefore a stainless steel and glass chamber was built to contain Component II, and provision made to couple it directly through a CO_2 watertrap to the mass spectrometer with the appropriate stainless steel tubing. This chamber is designated as Component IV. Both the mass spectrometer and Component IV were purged with helium and evacuated for a two hour period before any gas samples were drawn. In this way contamination was minimized. The definitive measurement were done at Gollob Analytical Services in Berkeley Heights, New Jersey.

We now describe the use of Component I and how its energy output to Component II is measured. The energy output of Component I is an amplitude modulated alternating current looking into a highly non-linear load, i.e., the water solution. Component I is so designed that at peak load it is in resonance across the system – Components I, II, and III – and the vector diagrams show that the capacitive reactance, and the inductance reactance are almost exactly 180° out of phase, so that the net power output is reactive (the dissipative power is very small). This design ensures minimum power losses across the entire output system. In the experiments to be described, the entire emphasis is placed on achieving the maximum gas yield (credit) in exchange for the minimum applied electrical energy.

The most precise way to measure the applied energy from Component I to Component II and Component III is to measure the power, P, in watts, W.

Ideally this should be done with a precision wattmeter. But since we were interested in following the voltage and current separately, it was decided not to use the watt meter. Separate meters were used to continuously monitor the current and the volts.

This is done by precision measurement of the volts across Component III as root mean square (rms) volts; and the current flowing in the system as rms amperes. Precisely calibrated instruments were used to take these two measurements. A typical set of experiments using water in the form of 0.9% saline solution 0.1540 molar to obtain high efficiency hydrolysis gave the following results:

rms Current = I = 25mA to 38 mA (0.025 A to 0.038 A.)

rms Volts = E = 4 Volts to 2.6 Volts

The resultant ration between current and voltage is dependent on many factors such as the gap distance between the center and ring electrodes, dielectric properties of the water, conductivity properties of the water, equilibrium states, isothermal conditions, materials used, and even the pressure of clathrates. The above current and voltage values reflect the net effect of various combinations of such parameters. When one takes the product of rms current, and rms volts, one has a measure of the power, P in watts.

P = I x E = 25 mA x 4.0 volts =100 mW (0.1 W)

and P = I x E =38 mA x 2.6 volts = 98.8 mW (0.0988 W)

At these power levels (with load), the resonant frequency of the system is 600 Hz (plus or minus 5 Hz) as measured on a precision frequency counter. The wave form was monitored for harmonic content on an oscilloscope, and the nuclear magnetic relaxation cycle was monitored on an XY plotting oscilloscope in order to maintain the proper hysteresis loop figure. All experiments were run so that the power in watts, applied through Components I, II, and III ranged between 98.8 mW to 100 mW.

Since by the International System of Units 1971 (ST), one Watt-second (Ws) is exactly equal to one Joule (J), our measurements of efficiency used these two yardsticks (1 Ws = 1J) from the debit side of the measurement.

The energy output of the system is, of course, the two gases, Hydrogen (H_2) and Oxygen, ($(½)O_2$), and this credit side was measured in two laboratories, on two kinds of calibrated instruments, namely gas chromatography machine, and mass spectrometer machine.

The volume of gases H_2 and $(½)O_2$ was measured as produced under standard conditions of temperature and pressure in unit time, i.e., in cubic centimeters per minute (cc/min), as well as the possibility contaminating gases, such as air oxygen, nitrogen and argon, carbon monoxide, carbon dioxide, water vapor, etc.

The electrical and gas measurements were reduced to the common denominator of Joules of energy so that the efficiency accounting could all be handled in one currency. We now present the averaged results from many experiments. The standard error between different samples, machines, and locations is at +/- 10%, and we only use the mean for all the following calculations.

Thermodynamic Efficiency for the endergonic decomposition of liquid water (salininized) to gases under Standard Atmosphere (754 to 750 mm Hg) and Standard Isothermal Conditions @ 25°C = 77°F = 298.16°K, according to the following reaction:

H_2O (1) → H_2(g) + (½)O_2(1) + ΔG = 56.620 Kcal /mole (10)

As already described, ΔG is the Gibbs function. We convert Kcal to our common currency of Joules by the formula, One Calorie = 4.1868 Joules

ΔG = 56.620 Kcal x 4.1868 J = 236,954/J/mol of H_2O where 1 mole = 18 gr. (11)

ΔG_e = the electrical energy required to yield an equivalent amount of energy from H_2O in the form of gases H_2 and (½)O_2.

To simplify our calculation we wish to find out how much energy is required to produce the 1.0 cc of H_2O as the gases H_2 and (½)O_2. There are (under standard conditions) 22,400 cc = V of gas in one mole of H_2O. Therefore

$$\frac{\Delta G}{V} = \frac{236{,}954J}{22{,}400cc} = 10.5783J/cc(12)$$

We now calculate how much electrical energy is required to liberate 1.0 cc of the H_2O gases (where H_2 = 0.666 parts, and (½)O_2 = 0.333 parts by volume) from liquid water. Since P = 1 Ws= 1 Joule , and V = 1.0 cc of gas = 10.5783 Joules, then

PV = 1 Js x 10.5783 J = 10.5783 Js, or, = 10.5783 Ws (13)

Since our experiments were run at 100 mW (0.1 W) applied to the water sample in Component II, III, for 30 minutes, we wish to calculate the ideal (100% efficient) gas production at this total applied power level. This is,

0.1 Ws x 60 sec x 30 min = 180,00 Joules (for 30 min.). The total gas production at ideal 100% efficiency is 180 J/10.5783 J/cc = 17.01 cc H_2O (g)

We further wish to calculate how much hydrogen is present in the 17.01 cc H_2O (g).

17.01 cc H_2O (g) x 0.666 H_2 (g) = 11.329 cc H_2(g) (14)

17.01 cc H_2O (g) x 0.333 (½)O_2 (g) = 5.681 cc (½) O_2 (g)

Against this ideal standard of efficiency of expected gas production, we must measure the actual amount of gas produced under: (1) Standard conditions as defined above, and (2) 0.1 Ws power applied over 30 minutes. In our experiments, the mean amount of H_2 and (½)O_2 produced, as measured on precision calibrated GC, and MS machines in two different laboratories, where SE is +/- 10%, is,

Measured Mean = 10.80 cc H_2 (g)
Measured Mean = 5.40 cc (½) cc (½)O_2 (g)
Total Mean = 16.20 cc H_2O (g)

The ratio, n, between the ideal yield, and measured yield,

Measured H_2 (g) / Ideal H_2 (g) = 10.80 cc / 11.33 cc = 91.30%

(6) Alternative Methodology for Calculating Efficiency Based on the Faraday Law of Electrochemistry

This method is based on the number of electrons that must be removed, or added to decompose, or form one mole of, a substance of valence one. In water H_2O, one mole has the following weight:

H = 1.008 gr /mol
H = 1.008 gr /mol
O = 15.999 gr/mol
Thus, 1 mol H_2O = 18.015 gr/mol

For a univalent substance one gram mole contains 6.022 x 10^{-23} electrons = N = Avogadro's Number. If the substance is divalent, trivalent, etc., N is multiplied by the number of the valence. Water is generally considered to be of valence two.

At standard temperature and pressure (STP) one mole of a substance contains 22.414 cc, where Standard temperature is 273.15° K = 0° C = T . Standard Pressure is one atmosphere = 760 mm Hg = P.

One Faraday (1*F*) is 96,485 Coulombs per mole (univalent).

One Coulomb (C) is defined as:

1 N / 1 F = 6.122 x 1023 Electrons / 96,485 C = one C

The flow of one C/second = one Ampere.
One C x one volt = one Joule second (Js).
One Ampere per second @ one volt = one Watt = one Joule.

In alternating current, when amps (I) and Volts (E) are expressed in root mean squares (rms), their product is Power.

P = IE watts.

With these basic definitions we can now calculate efficiency of electrolysis of water by the method of Faraday is electrochemistry.

The two-electron model of water requires 2 moles of electrons for electrolysis (2 x 6.022 x 10^{23}), or two Faraday quantities (2 x 96,485 = 192,970 Coulombs).

The amount of gas produced will be:

H_2 = 22,414 cc /mol at STP
(½)O_2 = 11,207 cc / mol at STP
Gases = 33.621 cc / mol H_2O (g)

The number of coulombs required to produce one cc of gases by electrolysis of water:

193,970 C / 33621 C = 5.739567 C per cc gases.

Then, 5,739 C /cc /sec = 5.739 amp/sec/cc. How many cc of total gases will be produced by 1 A/sec?

0.1742291709 cc.

How many cc of total gases will be produced by 1 A/min ?

10.45375 cc/min

What does this represent as the gases H_2 and O_2 ?

(½)O_2 = 3.136438721 cc/Amp/min.
H_2 = 6.2728 cc/Amp /min.

We can now develop a Table for values of current used in some of our experiments, and disregarding the voltage as is done conventionally.

I. Calculations for 100 mA per minute:
Total Gases = 1.04537 cc/min
H_2 = 0.6968 cc/min
(½)O_2 = 0.3484 cc/min
30 min. H_2 = 20.9054 cc/ 30 minutes

II. Calculations for 38 mA per minute:
Total Gases = 0.3972 cc/ 30 minutes
H_2 = 0.2645 cc/min
(½)O_2 = 0.1323 cc/min
30 min. H_2 = 7.9369 cc/min

III. Calculations for 25mA per minute:
30 min. H_2 = 5.2263 cc/ minute

(7) Conclusion

Figure 6 and 7 show two of the many energy production systems that may be configured to include renewable sources and the present electrolysis technique. Figure 6 shows a proposed photovoltaic powered system using a fuel cell as the primary battery. Assuming optimum operating conditions using 0.25 watt seconds of energy from the photovoltaic array would enable 0.15 watt seconds to be load.

Figure 7 depicts several renewable sources operating in conjunction with the electrolysis device to provide motive power for an automobile.

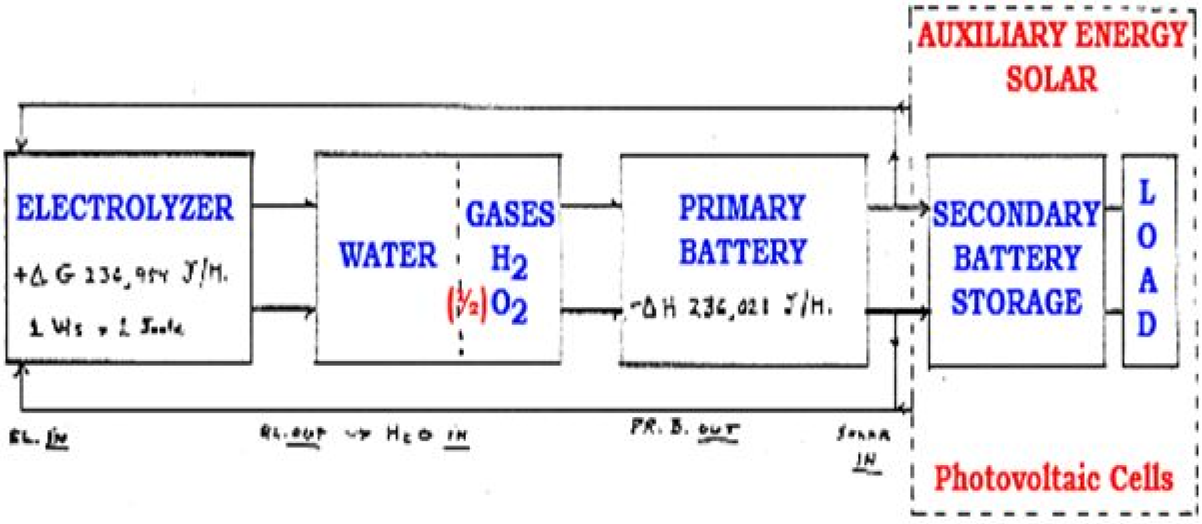

Figure 6: Proposed Photovoltaic Water Energy System

$+\Delta G$ 236,954 J/M H_2O (l) → H_2 (g) + $(1/2)O_2$ (g) - ΔH 236,021 J/M. → H_2O (l)

Efficiency, η=100%	η= 85%	η= 60% (Ni - cd)
ACCOUNTING IN WATT-SECONDS		
εl. IN =1.1 Ws H₂O IN= 1 Ws εl. OUT = 1.0 Ws	PR B. out = 1.00 Ws SOLAR IN =*0.25 Ws* P TOTAL = 1.25 Ws -1.10 Ws RETURN TO EL IN Continuous 0.15 Ws CHANGE TO BATTERY	SEC. BATT. = 2W

Standard Conditions: Atmospheric Pressure, Ambient Temperature

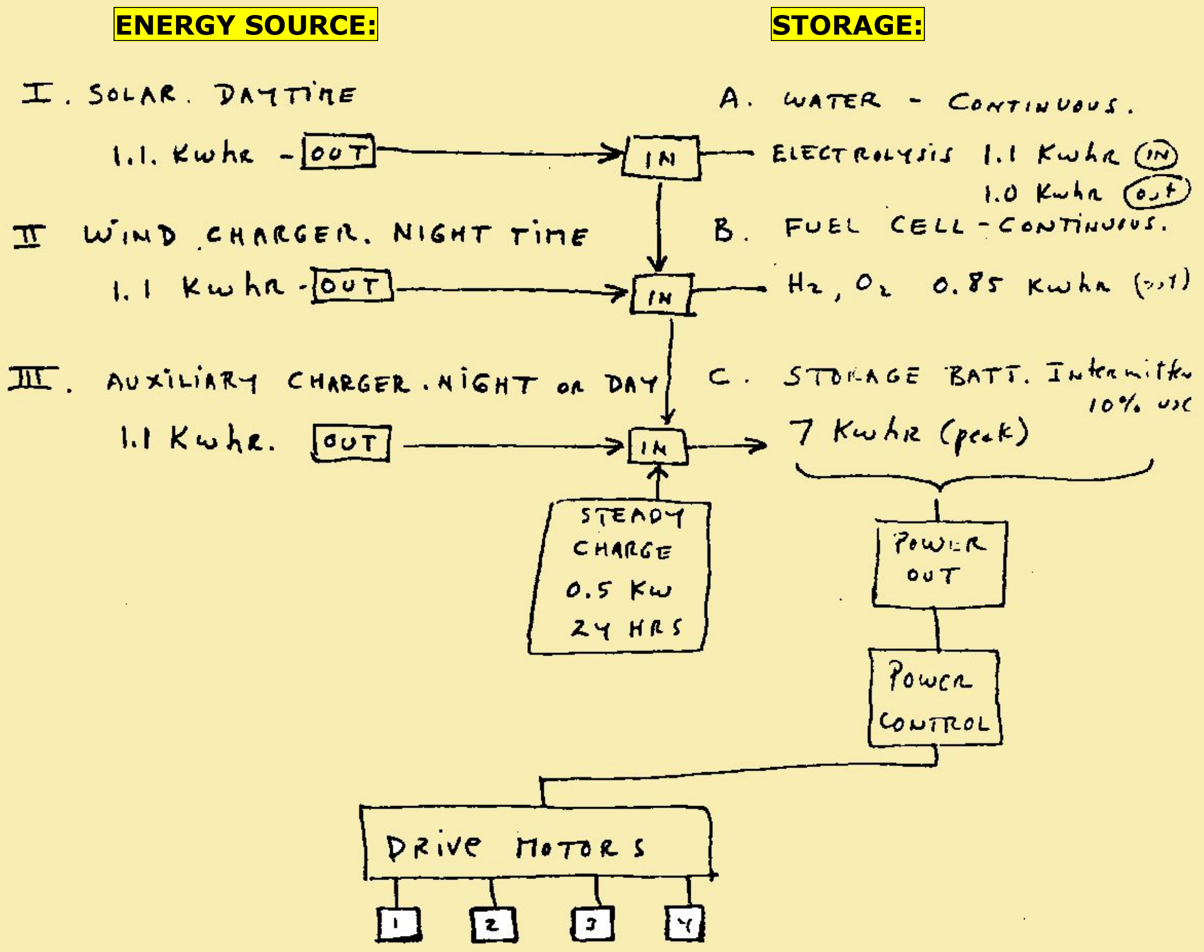

ADVANTAGES FOR A MOTOR CAR:

Cheap
Renewable
Clean

A. Uses only state of art **technology.**
B. **Energy** available everywhere, extremely cheap.
C. No hazard. Nontoxic. **Non-polluting**.
D. The vehicle would amortize itself from gasoline and oil savings in ten years.

Figure 7.

Thanks to:
(a) Fred Epps for the text and original diagrams;
(b) Geoff Egel for drawing enhancements.

In the following US Patent Puharich describes the same invention with more details and diagrams.

US Patent #4,394,230 by Puharich

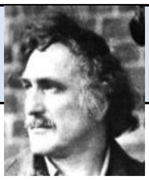

"Method & Apparatus for Splitting Water Molecules" -
Inventor: *Henry K. Puharich*, ***granted July 19, 1983***

ABSTRACT:

Disclosed herein is a new and improved thermodynamic device to produce hydrogen gas and oxygen gas from ordinary water molecules or from seawater at normal temperatures and pressure. Also disclosed is a new and improved method for electrically treating water molecules to decompose them into hydrogen gas and oxygen gas at efficiency levels ranging between approximately 80-100%. The evolved hydrogen gas may be used as a fuel; and the evolved oxygen gas may be used as an oxidant.

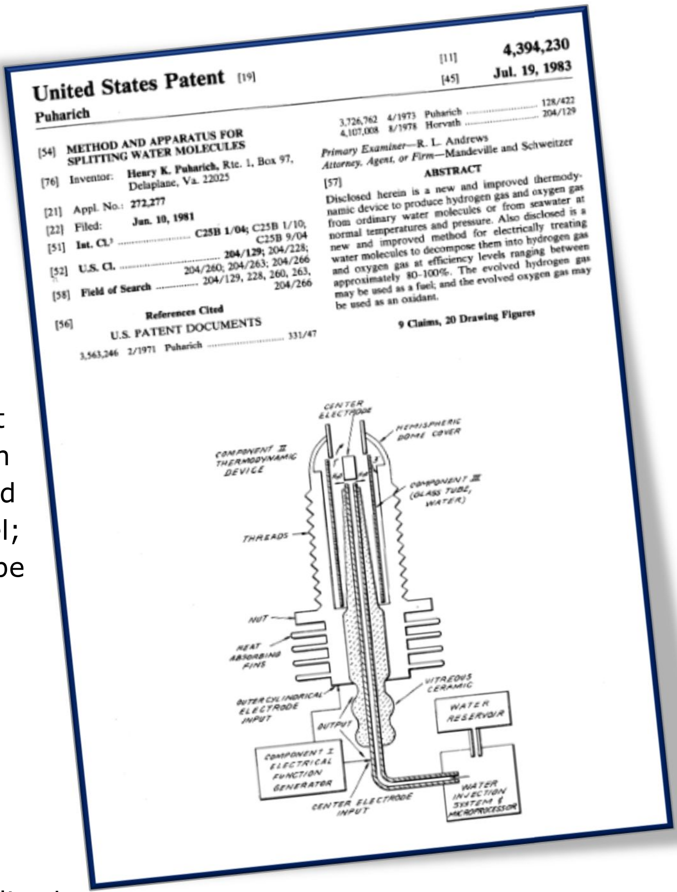

United States Patent [19]
Puharich

[11] **4,394,230**
[45] **Jul. 19, 1983**

[54] **METHOD AND APPARATUS FOR SPLITTING WATER MOLECULES**

[76] Inventor: **Henry K. Puharich**, Rte. 1, Box 97, Delaplane, Va. 22025

[21] Appl. No.: **272,277**

[22] Filed: **Jun. 10, 1981**

[51] **Int. Cl.**^{3} **C25B 1/04**; C25B 1/10; C25B 9/04

[52] **U.S. Cl.** **204/129**; 204/228; 204/260; 204/263; 204/266

[58] **Field of Search** 204/129, 228, 260, 263, 204/266

[56] **References Cited**

U.S. PATENT DOCUMENTS

3,563,246	2/1971	Puharich	331/47
3,726,762	4/1973	Puharich	128/422
4,107,008	8/1978	Horvath	204/129

Primary Examiner—R. L. Andrews
Attorney, Agent, or Firm—Mandeville and Schweitzer

[57] **ABSTRACT**

Disclosed herein is a new and improved thermodynamic device to produce hydrogen gas and oxygen gas from ordinary water molecules or from seawater at normal temperatures and pressure. Also disclosed is a new and improved method for electrically treating water molecules to decompose them into hydrogen gas and oxygen gas at efficiency levels ranging between approximately 80-100%. The evolved hydrogen gas may be used as a fuel; and the evolved oxygen gas may be used as an oxidant.

9 Claims, 20 Drawing Figures

BACKGROUND OF THE INVENTION

The scientific community has long realized that water is an enormous natural energy resource, indeed an inexhaustible source, since there are over 300 million cubic miles of water on the earth's surface, all of it a potential source of hydrogen for use as fuel. In fact, more than 100 years ago Jules Verne prophesied that water eventually would be employed as a fuel and that the hydrogen and oxygen which constitute it would furnish an inexhaustible source of heat and light.

Water has been split into its constituent elements of hydrogen and oxygen by electrolytic methods, which have been extremely inefficient, by thermochemical extraction processes called thermochemical water-splitting, which have likewise been inefficient and have also been inordinately expensive, and by other processes including some employing solar energy. In addition, artificial chloroplasts imitating the natural process of photosynthesis have been used to separate hydrogen from water utilizing complicated membranes and sophisticated artificial catalysts. However, these artificial chloroplasts have yet to produce hydrogen at an efficient and economical rate.

These and other proposed water splitting techniques are all part of a massive effort by the scientific community to find a plentiful, clean, and inexpensive source of fuel. While none of the methods have yet proved to be commercially feasible, they all share in common the known acceptability of hydrogen gas as a clean fuel, one that can be transmitted easily and economically over long distances and one which when burned forms water.

SUMMARY OF THE PRESENT INVENTION

In classical quantum physical chemistry, the water molecule has two basic bond angles, one angle being 104°, and the other angle being 109°28′.

The present invention involves a method by which a water molecule can be energized by electrical means so as to shift the bond angle from the 104° configuration to the 109°28′ tetrahedral geometrical configuration.

An electrical function generator (Component I) is used to produce complex electrical wave form frequencies which are applied to, and match the complex resonant frequencies of the tetrahedral geometrical form of water.

It is this complex electrical wave form applied to water which is contained in a special thermodynamic device (Component II) which shatters the water molecule by resonance into its component molecules – hydrogen and oxygen.

The hydrogen, in gas form, may then be used as fuel; and oxygen, in gas form is used as oxidant. For example, the thermodynamic device of the present invention may be used as a hydrogen fuel source for any existing heat engine – such as, internal combustion engines of all types, turbines, fuel cell, space heaters, water heaters, heat exchange systems, and other such devices. It can also be used for the desalinization of sea water, and other water purification purposes. It can also be applied to the development of new closed cycle heat engines where water goes in as fuel, and water comes out as a clean exhaust.

For a more complete understanding of the present invention and for a greater appreciation of its attendant advantages, reference should be made to the following detailed description taken in conjunction with the accompanying drawings.

DESCRIPTION OF THE DRAWINGS

FIG. 1 is a schematic block diagram illustrating the electrical function generator, Component I, employed in the practice of the present invention;

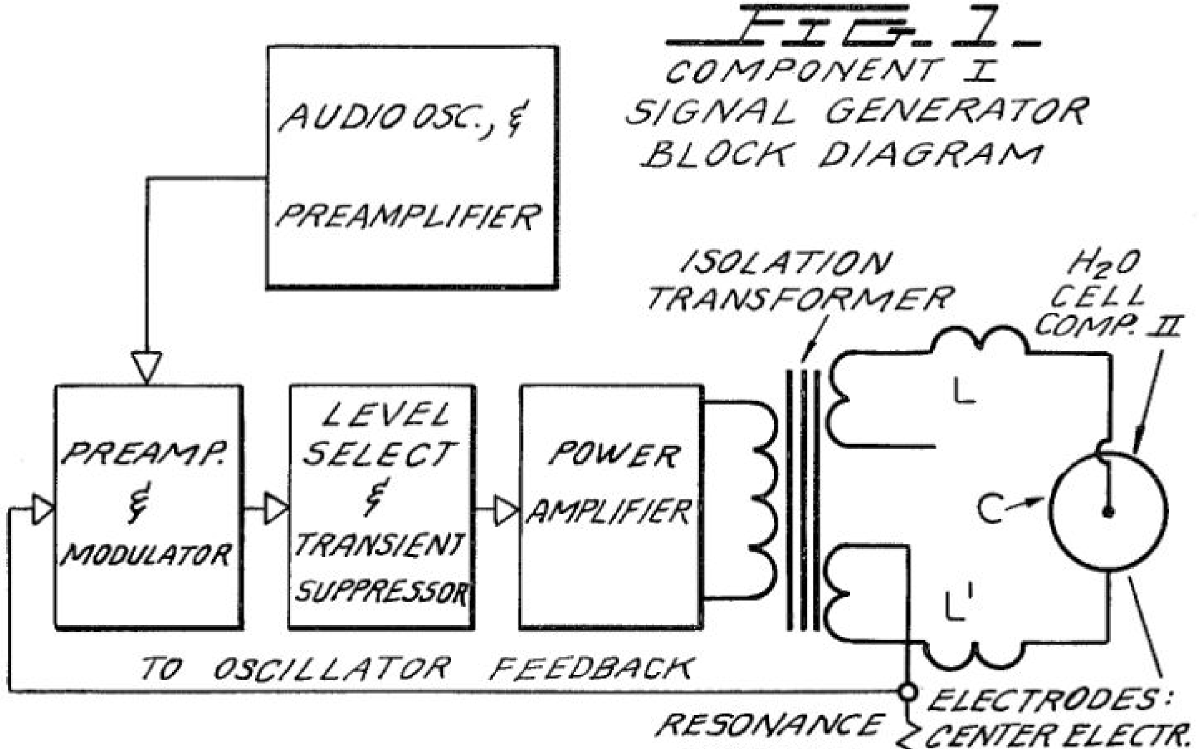

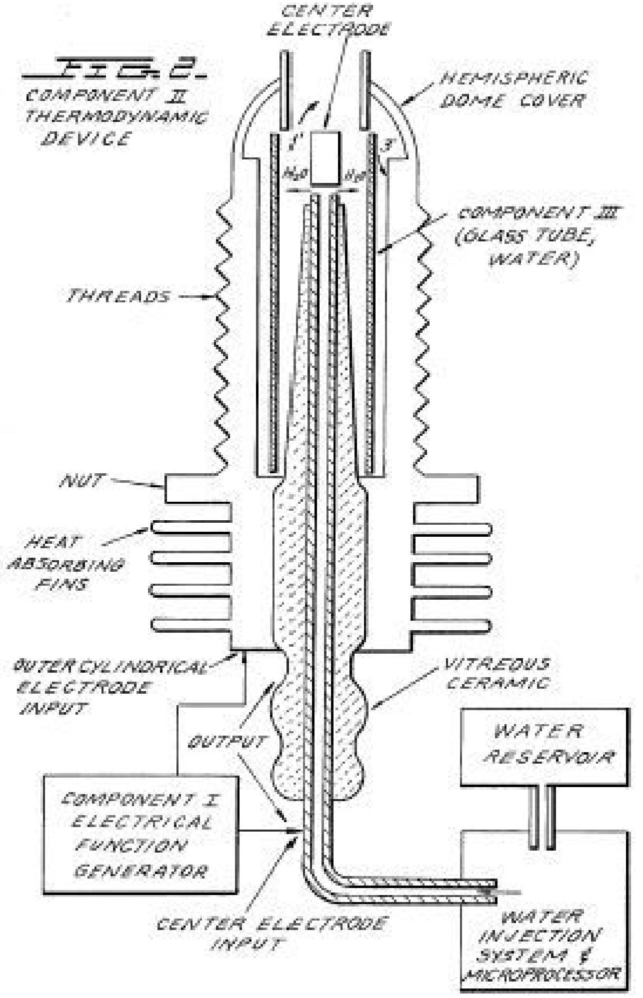

FIG. 2 is a schematic illustration of the apparatus of the present invention, including a cross sectional representation of the thermodynamic device, Component II;

FIG. 3 is a cross-sectional view of Component III of the present invention, the water cell section of Component II;

FIG. 3.

COMPONENT III.
THE WATER CELL SECTION
OF COMPONENT II

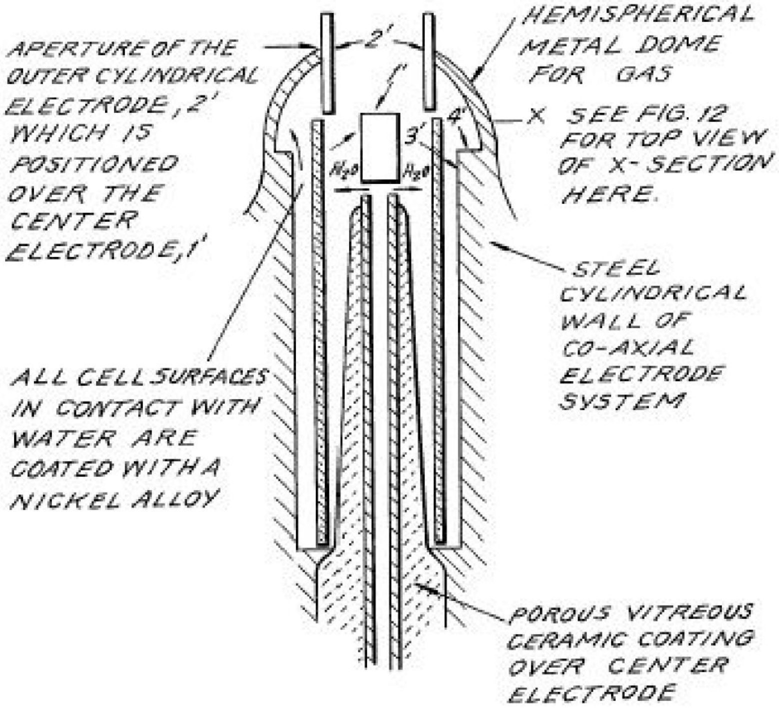

FIG. 4 is an illustration of the hydrogen covalent bond;

FIG. 4.

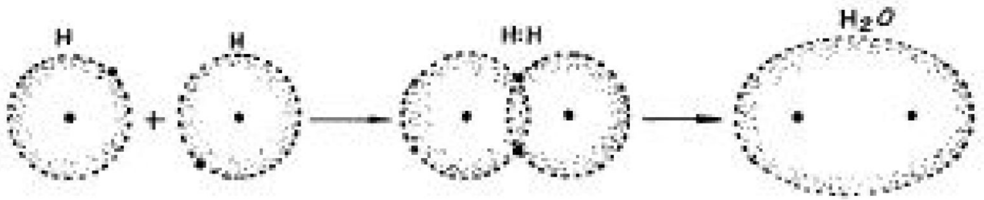

FIG. 4A is an illustration of the hydrogen bond angle;

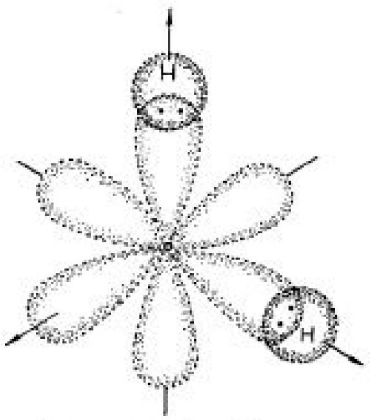

FIG. 4A.

UNHYBRIDIZED ORBITAL INTERACTION
IN WATER BOND ANGLE IS
104° RATHER THAN 90° AS PREDICTED

FIG. 4B is an illustration of hybridized and un-hybridized orbitals;

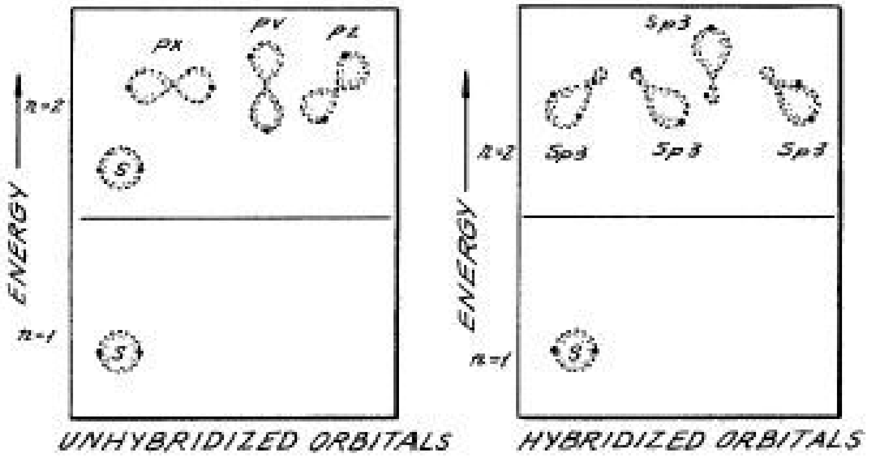

FIG. 4B

FORMATION OF sp3 HYBRID ORBITALS

FIG. 4C is an illustration of the geometry of methane ammonia and water molecules;

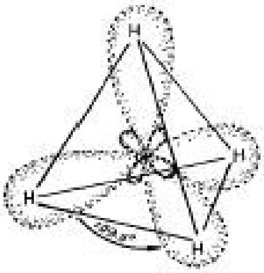

HYBRIDIZED METHANE MOLECULE CH_4

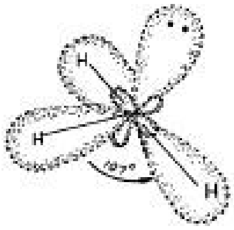

HYBRIDIZED AMMONIA MOLECULE NH_3

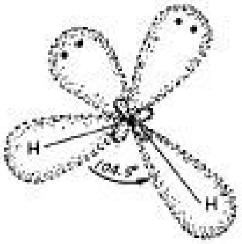

HYBRIDIZED WATER MOLECULE H_2O

FIG. 4C

GEOMETRY OF METHANE, AMMONIA, AND WATER MOLECULES

FIG. 5 is an illustration of an amplitude modulated carrier wave;

FIG. 5

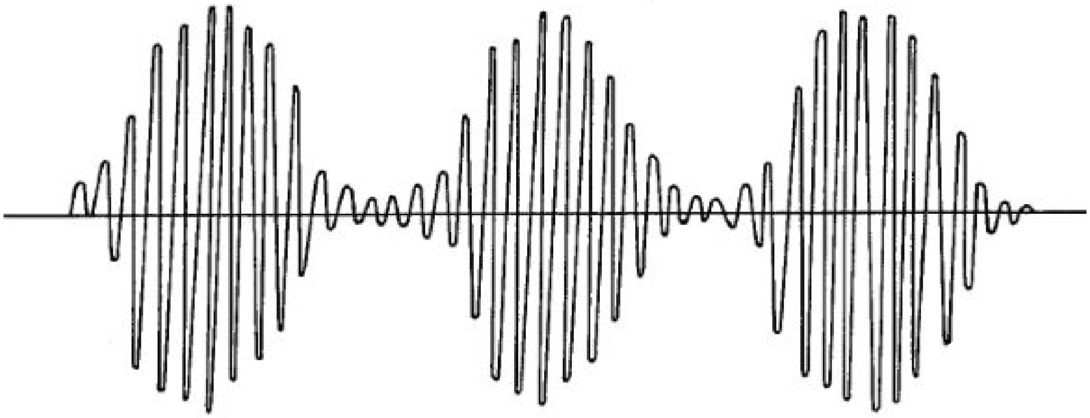

AMPLITUDE MODULATED 90° CARRIER SINE WAVE

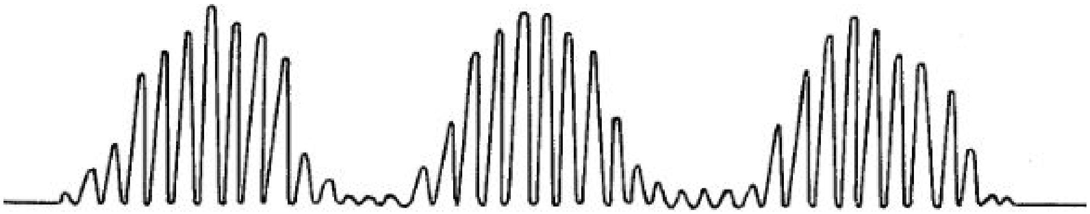

HALF-WAVE VECTIFICATION OF ABOVE SIGNAL

FIG. 6 is an illustration of a ripple square wave;
FIG. 6 A is an illustration of unipolar pulses;

FIG. 6

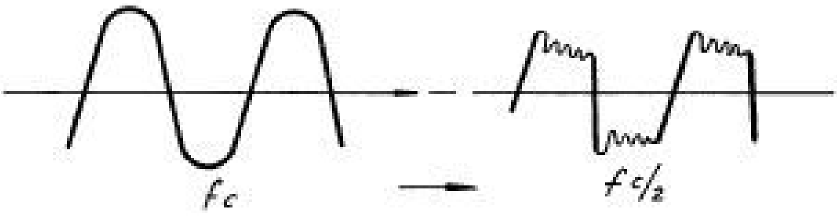

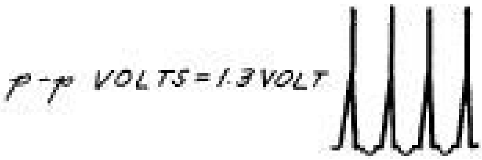

FIG. 6A

FIG. 7 is a diagram showing ion distribution at the negative electrode;

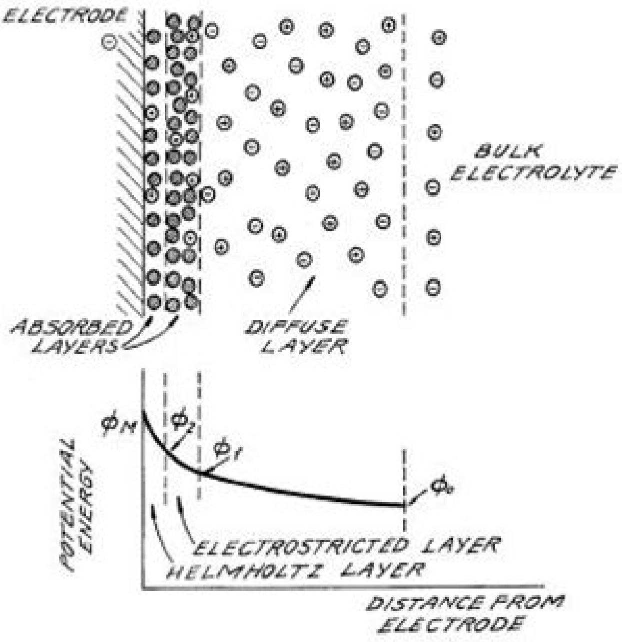

FIG. 7

DIAGRAM OF THE DOUBLE LAYER CLOSE TO A NEGATIVE ELECTRODE. THE POTENTIAL ENERGY OF POSITIVE IONS IN THIS REGION WHEN NO CURRENT IS FLOWING IS SHOWN IN THE LOWER DIAGRAM. $\phi_M - \phi_2$ IS THE ELECTRON TRANSFER POTENTIAL: $\phi_2 - \phi_1$ IS RELATED TO THE ACTIVATION OVERPOTENTIAL: AND $\phi_1 - \phi_0$ IS RELATED TO THE DIFFUSION OVERPOTENTIAL

KEY
● SOLVENT MOLECULE = H_2O
⊕ POSITIVE ION = H^+
⊖ NEGATIVE ION = O^-

FIG. 8 is an illustration of tetrahedral bonding orbitals;

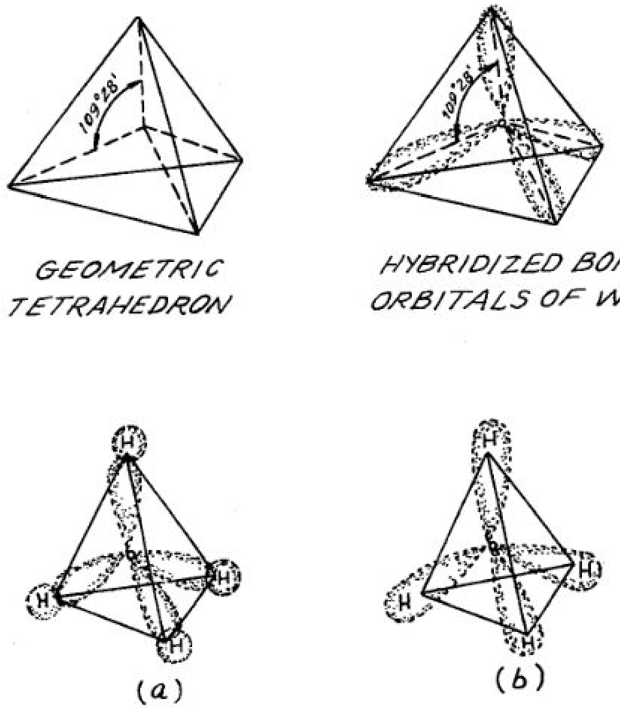

GEOMETRIC TETRAHEDRON

HYBRIDIZED BONDING ORBITALS OF WATER

(a)

(b)

METHANE OVERLAP OF SPHERICAL 1s ORBITAL OF HYDROGEN WITH sp3 BONDING ORBITALS OF CARBON (a) RESULTS IN EQUIVALENT SIGMA BONDS, THE MOLECULAR ORBITALS OF (b).

FIG. 8.

EQUIVALENT TETRAHEDRAL BONDING ORBITALS OF WATER

FIG. 9 is an illustration of water molecules;

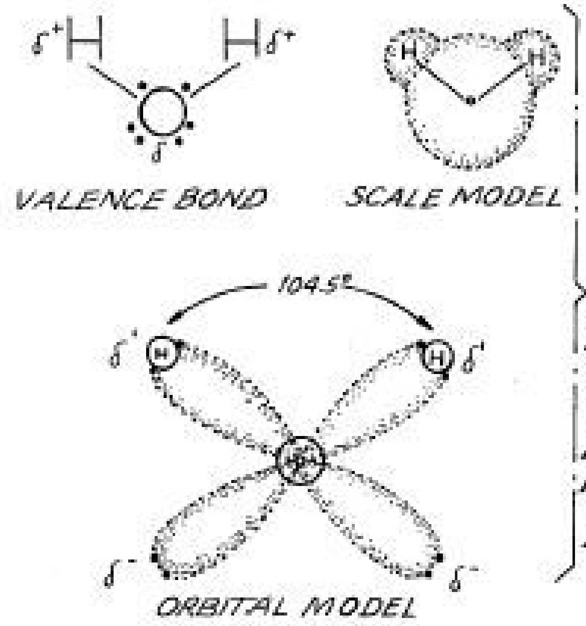

FIG. 9.
THE WATER MOLECULE. THE WATER DIPOLE RESULTS FROM UNEVEN CHARGE DISTRIBUTION.

FIG. 10 is an illustration of productive and non-productive collisions of hydrogen with iodine;

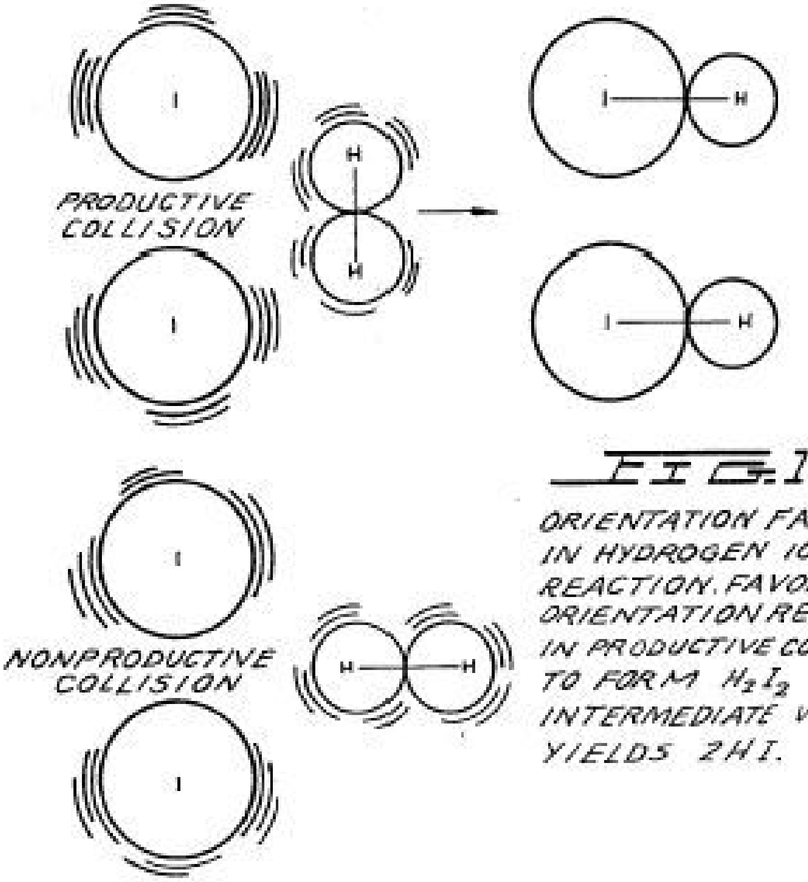

FIG. 10
ORIENTATION FACTOR IN HYDROGEN IODIDE REACTION. FAVORABLE ORIENTATION RESULTS IN PRODUCTIVE COLLISION TO FORM H_2I_2 INTERMEDIATE WHICH YIELDS 2HI.

FIG. 11 is a wave form found to be the prime characteristic for optimum efficiency;

FIG. 11

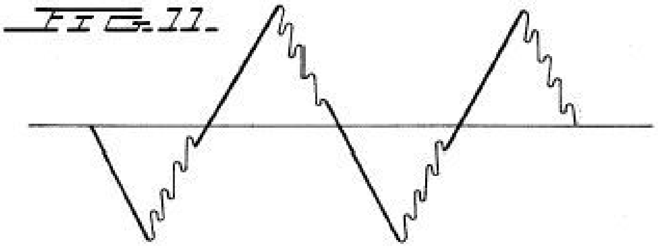

FIG. 12 is an illustration of pearl chain formation;

FIG. 12

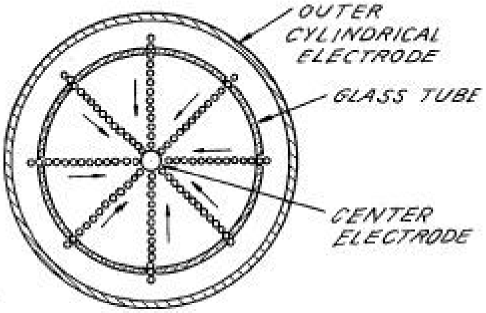

PEARL CHAIN FORMATION OF HYDROGEN GAS BUBBLES IN COMPONENT III AS SEEN FROM ABOVE

FIG. 13 is a plot of the course of the onset of the barrier effect and the unblocking of the barrier effect; and

FIG. 13

A PLOT OF THE COURSE OF THE ONSET OF THE BARRIER EFFECT, AND UNBLOCKING IT WITH MECHANICAL TAPPING TO COMPONENTS II, III.

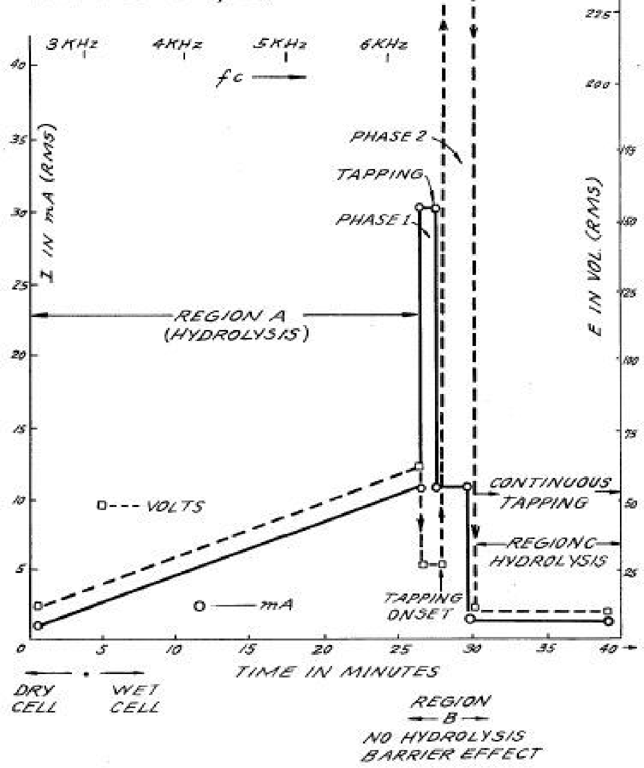

FIGS. 14A, B, and C are energy diagrams for exergonic reactions.

FIG. 14A.

(a) AN EXERGONIC REACTION. PRODUCTS HAVE A LOWER POTENTIAL ENERGY THAN REACTANTS, THEREFORE, ENERGY IS RELEASED.

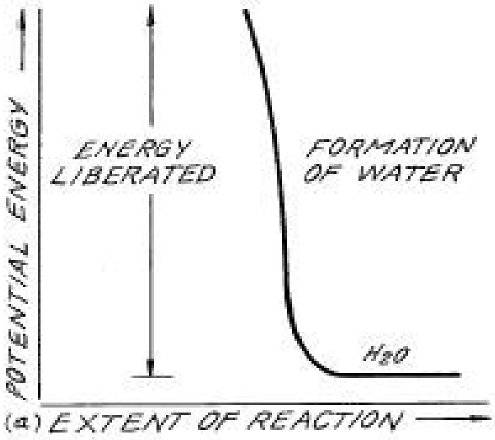

FIG. 14B.

(b) AN ENDERGONIC REACTION PRODUCTS HAVE A HIGHER POTENTIAL ENERGY THAN REACTANTS, CAUSING ENERGY TO BE CONSUMED.

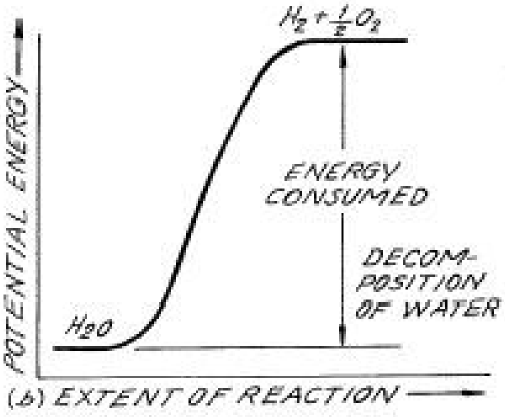

FIG. 14C.

ENERGY DIAGRAM FOR EXERGONIC REACTION. ACTIVATION ENERGY IS BARRIER TO BE OVERCOME FOR REACTION TO PROCEED, & IS SUPPLIED AS A "SPARK" TO THE GASES TO GET IGNITION.

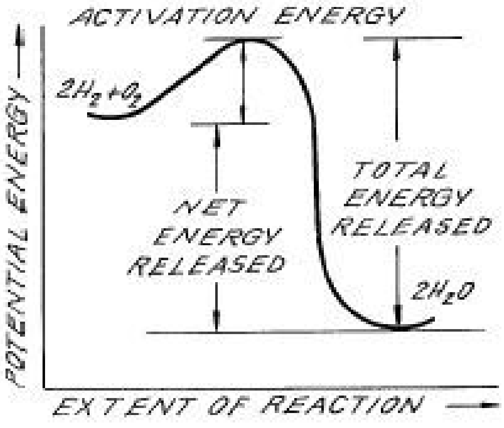

DETAILED DESCRIPTION OF INVENTION

Section 1 – Apparatus of Invention

The apparatus of the invention consists of three components, the electrical function generator, the thermodynamic device, and the water cell.

COMPONENT I. The Electrical Function Generator

This device has an output consisting of an audio frequency (range 20 to 200 Hz) amplitude modulation of a carrier wave (range 200 Hz to 100,000 Hz). The impedance of this output signal is continuously being matched to the load which is the second component, the thermodynamic device.

The electrical function generator represents a novel application of circuitry disclosed in my earlier U.S. Patent № 3,629,521 3,563,246 and 3,726,762, which are incorporated by reference herein. See FIG. 1 for the block diagram of Component I.

COMPONENT II. The Thermodynamic Device

The thermodynamic device is fabricated of metals and ceramic in the geometric form of coaxial cylinder made up of a centered hollow tubular electrode which is surrounded by a larger tubular steel cylinder, said two electrodes comprising the coaxial electrode system which forms the load of the output of the electrical function generator, Component I. Said center hollow tubular electrode carries water, and is separated from the outer cylindrical electrode by a porous ceramic vitreous material. Between the outer surface of the insulating ceramic vitreous material, and the inner surface of the outer cylindrical electrode exists a space to contain the water to be electrolysed. This water cell space comprises the third component (Component III) of the invention. It contains two lengths of tubular Pyrex glass, shown in FIGS. 2 and 3. The metal electrode surfaces of the two electrodes which are in contact with the water are coated with a nickel alloy.

The coaxial electrode system is specifically designed in materials and geometry to energize the water molecule to the end that it might be electrolysed. The center electrode is a hollow tube and also serves as a conductor of water to the Component III cell. The center tubular electrode is coated with a nickel alloy, and surrounded with a porous vitreous ceramic and a glass tube with the exception of the tip that faces the second electrode. The outer cylindrical electrode is made of a heat conducting steel alloy with fins on the outside, and coated on the inside with a nickel alloy. The center electrode, and the cylindrical electrode are electrically connected by an arching dome extension of the outer electrode which brings the two electrodes at one point to a critical gap distance which is determined by the known quenching distance for hydrogen. See FIG. 2 for an illustration of Component II.

COMPONENT III. The Water Cell

The water cell is a part of the upper end of Component II, and has been described. An enlarged schematic illustration of the cell is presented in FIG. 3. The Component III consists of the water and glass tubes contained in the geometrical form of the walls of cell in Component II, the thermodynamic device. The elements of a practical device for the practice of the invention will include:

(A) Water reservoir; and salt reservoir; and/or salt

(B) Water injection system with microprocessor or other controls which sense and regulate (in accordance with the parameters set forth hereinafter):

a. carrier frequency
b. current
c. voltage
d. RC relaxation time constant of water in the cell
e. nuclear magnetic relaxation constant of water
f. temperature of hydrogen combustion
g. carrier wave form
h. RPM of an internal combustion engine (if used)
i. ignition control system
j. temperature of region to be heated;

(C) An electrical ignition system to ignite the evolved hydrogen gas fuel.

The important aspects of Component III are the tubular vitreous material, the geometry of the containing walls of the cell, and the geometrical forms of the water molecules that are contained in the cell. A further important aspect of the invention is the manipulation of the tetrahedral geometry of the water molecule by the novel methods and means which will be more fully described in the succeeding sections of this specification.

The different parts of a molecule are bound together by electrons. One of the electron configurations which can exist is the covalent bond which is achieved by the sharing of electrons. A molecule of hydrogen gas, H_2 is the smallest representative unit of covalent bonding, as can be seen in FIG. 4. The molecule of hydrogen gas is formed by the overlap and pairing of 1s orbital electrons. A new molecular orbit is formed in which the shared electron pair orbits both nuclei as shown in FIG. 4. The attraction of the nuclei for the shared electrons holds the atoms together in a covalent bond.

Covalent bonds have direction. The electronic orbitals of an uncombined atom can change shape and direction when that atom becomes part of a molecule. In a molecule in which two or more covalent bonds are present the molecular geometry is dictated by the bond angles about the central atom. The outermost lone pair (non-bonding) electrons profoundly affect the molecular geometry.

The geometry of water illustrates this concept. In the ground state, oxygen has the outer shell configuration

$$\mathbf{1s^2\ 2s^2\ 2p^2_x\ 2p^1_y\ 2p^1_z}$$

In water the 1s electrons from two hydrogens bond with the $2p_y$ and $2p_z$ electrons of oxygen. Since p orbitals lie at right angles to each other (see FIG. 4A), a bond angle of 90° might be expected. However, the bond angle is found experimentally to be approximately 104°. Theoretically this is explained by the effect of lone pair electrons on hybridized orbitals.

Combined or hybrid orbitals are formed when the excitement of 2s electrons results in their promotion from the ground state to a state energetically equivalent to the 2p orbitals.

The new hybrids are termed sp^3 from the combination of one s and three p orbitals (See FIG. 4B). Hybrid sp^3 orbitals are directed in space from the center of a regular tetrahedron toward the four corners. If the orbitals are equivalent the bond angle will be 109°28′ (See Fig. 15) consistent with the geometry of a tetrahedron. In the case of water two of the orbitals are occupied by non-bonding electrons (See FIG. 4C). There is greater repulsion of these lone pair electrons which orbit only one nucleus, compared to the repulsion of electrons in bonding orbitals which orbit two nuclei. This tends to increase the angle between non-bonding orbitals so that it is greater than 109°, which pushes the bonding orbitals together, reducing the bond angle to 104°. In the case of ammonia, NH_3 where there is only one lone pair, the repulsion is not so great and the bond angle is 107°. Carbon forms typical tetrahedral forms and components the simplest being the gas methane, CH_4 (See FIGS. 4C and 8). The repulsion of lone pair electrons affects charge distribution and contributes to the polarity of a covalent bond. (See FIG. 16)

As demonstrated in succeeding sections of this patent specification, a significant and novel aspect of this invention is the manipulation, by electronic methods and means, of the energy level of the water molecule, and the transformation of the water molecule into, and out of, the geometrical form of the tetrahedron. This is made possible only by certain subtle dynamic interactions among the Components I, II, and III of the present invention.

Section 2 – Electrodynamics (Pure Water)

The electrodynamics of Components I, II, and III described individually and in interaction during the progress of purewater reaction rate in time. The reactions of saline water will be described in Section 3. It is to be noted that the output of Component I automatically follows the seven stages (hereinafter Stages A-F) of the reaction rate by varying its parameters of resonant carrier frequency, wave form, current voltage and impedance. All the seven states of the reaction herein described are not necessary for the practical operation of the system, but are included in order to explicate the dynamics and novel aspects of the invention. The seven stages are applicable only to the electrolysis of pure water.

STAGE A

Dry Charging of Component II by Component I

To make the new system operational, the Component I output electrodes are connected to component II, but no water is placed in the cell of Component III. When Component I output is across the load of Component II we observe the following electrical parameters are observed:

Range of current (I) output with (dry) load:

0 to 25 mA (milliamperes) rms.

Range of voltage (E) output with (dry) load:

0 to 250 Volts (AC) rms.

There is no distortion of the amplitude modulated (AM), or of the sine wave carrier whose center frequency, f_c'

Ranges between 59,748 Hz to 66,221 Hz

with f_c average = 62,985 Hz

The carrier frequency varies with the power output in that f_c goes down with an increase in amperes (current). The AM wave form is shown in FIG. 5. It is to be noted here that the electrical function generator, Component I, has an automatic amplitude modulation volume control which cycles the degree of AM from 0% to 100%, and then down from 100% to 0% ≈ every 3.0 seconds. This cycle rate of 3.0 seconds corresponds to the nuclear spin relaxation time, tau/sec, of the water in Component III. The meaning of this effect will be discussed in greater detail in a later section.

In summary, the principal effects to be noted during Stage A -dry charging of Component II are as follows:

a. Tests the integrity of Component I circuitry.

b. Tests the integrity of the coaxial electrodes, and the vitreous ceramic materials of Component II and Component III.

c. Electrostatic cleaning of electrode and ceramic surfaces.

STAGE B

Initial operation of Component I, Component II, and with Component III containing pure water. There is no significant electrolysis of water during Stage B. However, in Stage B the sine wave output of Component I is shaped to a rippled square wave by the changing RC constant of the water as it is treated;

There is an 'Open Circuit' reversible threshold effect that occurs in Component III due to water polarization effects that lead to half wave rectification and the appearance of positive unipolar pulses; and

There are electrode polarization effects in Component II which are a prelude to true electrolysis of water as evidenced by oxygen and hydrogen gas bubble formation.

Appearance of Rippled Square Waves

Phase 1: At the end of the Stage A dry charging, the output of Component I is lowered to a typical value of:

I = 1mA. E = 24VAC. f_c ≈66,234 Hz.

Phase 2: Then water is added to the Component III water cell drop by drop until the top of the center electrode, 1′, in FIG. 3 is covered, and when this water just makes contact with the inner surface of the top outer electrode at 2′. As this coupling of the two electrodes by water happens, the following series of events occur:

Phase 3: The f_c drops from 66,234 Hz, to a range from 1,272 Hz to 1,848 Hz. The current and voltage both drop, and begin to pulse in entrainment with the water nuclear spin relaxation constant, tau =3.0 sec. The presence of the nuclear spin relaxation oscillation is proven by a characteristic hysteresis loop on the X-Y axes of an oscilloscope.

I = 0 to 0.2mA surging at T cycle

E = 4.3 to 4.8VAC surging at T cycle

The sine wave carrier converts to a rippled square wave pulse which reflects the RC time constant of water, and it is observed that the square wave contains higher order harmonics. See FIG. 6:

With the appearance of the rippled square wave, the threshold of hydrolysis may be detected (just barely) as a vapor precipitation on a cover glass slip placed over the Component III cell and viewed under a low power microscope.

The ‘Open Circuit’ Reversible Threshold Effect

Phase 4: A secondary effect of the change in the RC constant of water on the wave form shows up as a full half wave rectification of the carrier wave indicating a high level of polarization of the water molecule in tetrahedral form at the outer electrode.

With the already noted appearance of the rippled square wave, and the signs of faint vapor precipitation which indicate the earliest stage of electrolysis, it is possible to test for the presence of a reversible hydrolysis threshold. This test is carried out by creating an open circuit between Components I and II, i.e., no current flows. This is done by lowering the water level between the two electrodes in the region – 1′ and 2′ shown in FIG. 3; or by interrupting the circuit between Component I and II, while the Component I signal generator is on and oscillating.

Immediately, with the creation of an ‘open circuit’ condition, the following effects occur:

(a) The carrier frequency, f_c, shifts from Phase 4 valve 1,272 Hz to 1,848 Hz to 6,128 Hz.

(b) The current and voltage drop to zero on the meters which record I and E, but the oscilloscope continues to show the presence of the peak-to-peak (p-p) voltage, and the waveform shows a remarkable effect. The rippled square wave has disappeared, and in its place there appear unipolar (positive) pulses as follows in FIG. 6A.

The unipolar pulse frequency stabilizes to ca. 5,000 Hz. The unipolar pulses undergo a 0 to 1.3 volt pulsing amplitude modulation with T at 3.0 seconds.

Thus, there exists a pure open circuit reversible threshold for water electrolysis in which the water molecules are capacitor charging and discharging at their characteristic low frequency RC time constant of 0.0002 seconds. It is to be noted that pure water has a very high dielectric constant which makes such an effect possible. The pulsing amplitude modulation of the voltage is determined by the Hydrogen Nuclear Spin Relaxation constant, where $T \approx 3.0$ seconds. It is to be noted that the positive pulse spikes are followed by a negative after-potential. These pulse wave forms are identical to the classic nerve action potential spikes found in the nervous system of all living species that have a nervous system. The fact that these unipolar pulses were observed arising in water under the conditions of reversible threshold hydrolysis has a profound significance. These findings illuminate and confirm the Warren McCulloch Theory of water "crystal" dynamics as being the foundation of neural dynamics; and the converse theory of Linus Pauling which holds that water clathrate formation is the mechanism of neural anesthesia.

Phase 5: The effects associated with reversible threshold electrolysis are noted only in passim since they reflect events which are occurring on the electrode surfaces of Component II, the Thermodynamic Device.

A principal effect that occurs in Stage B, Phase 3, in Component II, the thermodynamic device, is that the two electrodes undergo stages of polarization. It has been observed in extensive experiments with different kinds of fluids in the cell of Component II , i.e., distilled water, sea water, tap water, Ringers solution, dilute suspensions of animal and human blood cells, that the inner surface of the outer ring electrode at 3′ in FIG. 3 (the electrode that is in contact with the fluid) becomes negatively charged. Referring to FIG. 7, this corresponds to the left hand columnar area marked, Electrode Θ.

Electrode Polarization Effects at the Interface Between Components II and III

Concurrently with the driver pulsing of Component I at the T constant cycle which leads to electrode polarization effects in Component II, there is an action on Component III which energizes and entrains the water molecule to a higher energy level which shifts the bond angle from 104° to the tetrahedral form with angle 109°28′ as shown in FIGS. 8 and 15. This electronic pumping action is most important, and represents a significant part of the novel method of this invention for several reasons. First, the shift to the tetrahedral form of water increases the structural stability of the water molecule, thereby making it more susceptible to breakage at the correct resonant frequency, or frequencies. Second, increasing the polarization of the water molecule makes the lone pair electrons, S- connected with the oxygen molecule more electronegative; and the weakly positive hydrogen atoms, S+ more positive. See FIG. 9 and FIG. 22.

As the outer electrode becomes more electronegative, the center electrode concomitantly becomes more electropositive as will be shown. As the polarity of the water molecule tetrahedron increases, a repulsive force occurs between the two S+ apices of the water tetrahedron and the negatively charged electrode surface within the region of the Helmholtz layer, as shown in FIG. 7. This effect "orients" the water molecule in the field, and is the well-known "orientation factor" of electrochemistry which serves to catalyse the rate of oxygen dissociation from the water molecule, and thereby causes the reaction rate to proceed at the lowest energy levels. See FIG. 10 for an example of how the orientation factor works.

Near the end of Stage B, the conditions are established for the beginning of the next stage, the stage of high efficiency electrolysis of water.

STAGE C

Generation of the complex wave form frequencies from Component I to match the complex wave form resonant frequencies of the energized and highly polarized water molecule in tetrahedral form with angles, 109°28′ are carried out in Stage C.

In the operation of the invention active bubble electrolysis of water is initiated following Stage B, phase 3 by setting (automatically) the output of Component I to:

I = 1mA., E = 22VAC-rms,

causing the rippled square wave pulses to disappear with the appearance of a rippled sawtooth wave. The basic frequency of the carrier now becomes, f_c = 3,980 Hz.

The wave form now automatically shifts to a form found to be the prime characteristic necessary for optimum efficiency in the electrolysis of water and illustrated in FIG. 11. In the wave form of FIG. 11, the fundamental carrier frequency, f_c = 3,980 Hz., and a harmonic modulation of the carrier is as follows:

- 1st Order Harmonic Modulation (OHM) = 7,960 Hz.
- 2nd Order Harmonic Modulation (II OHM) = 15,920 Hz.
- 3rd Order Harmonic Modulation (III OHM) = 31,840 Hz.
- 4th Order Harmonic Modulation (IV OHM) = 63,690 Hz.

What is believed to be happening in this IV OHM effect is that each of the four apices of the tetrahedron water molecule is resonant to one of the four harmonics observed. It is believed that the combination of negative repulsive forces at the outer electrode with the resonant frequencies just described work together to shatter the water molecule into its component hydrogen and oxygen atoms (as gases).

This deduction is based on the following observations of the process through a low power microscope. The hydrogen bubbles were seen to originate at the electrode rim, 4′, of FIG. 3. The bubbles then moved in a very orderly `pearl chain` formation centripetally (like the spokes of a wheel) toward the center electrode, 1′ of FIG. 3. FIG. 12 shows a top view of this effect.

Thereafter, upon lowering the output of Component I, the threshold for electrolysis of water as evidenced by vapor deposition of water droplets on a glass cover plate over the cell of Component III, is:

$$\left.\begin{array}{l} I = \text{mA.} \\ E = 10 \text{ volts} \end{array}\right\} = 10\ mw.$$

with all other conditions and waveforms as described under Stage C, supra. Occasionally, this threshold can be lowered to:

$$\left.\begin{array}{l} I = \text{mA.} \\ E = 2.6 \text{ volts} \end{array}\right\} = 2.6\ mw.$$

This Stage C vapor hydrolysis threshold effect cannot be directly observed as taking place in the fluid because no bubbles are formed – only invisible gas molecules which become visible when they strike a glass plate and combine into water molecules and form droplets which appear as vapor.

STAGE D

Production of hydrogen and oxygen gas at an efficient rate of water electrolysis is slowed in Stage D when a barrier potential is formed, which barrier blocks electrolysis, irrespective of the amount of power applied to Components II and III.

A typical experiment will illustrate the problems of barrier potential formation. Components I, II, and III are set to operate with the following parameters:

$$\left.\begin{array}{l} I = 1 \text{ mA.} \\ E = 11.2 \text{ volts} \end{array}\right\} \begin{array}{l} = 11.2\ mw. \text{ (at the start)} \\ \text{(rising to } 100\ mw.\text{)} \end{array}$$

This input to Component III yields, by electrolysis of water, approximately 0.1 cm^3 of hydrogen gas per minute at one atmosphere and 289° K. It is observed that as a function of time the f_c crept up from 2,978 Hz to 6,474 Hz over 27 minutes. The current and the voltage also rose with time. At the 27th minute a barrier effect blocked the electrolysis of water, and one can best appreciate the cycle of events by reference to FIG. 13.

STAGE E

The Anatomy of the Barrier Effect

Region A: Shows active and efficient hydrolysis

Region B: The barrier region effect can be initiated with taps of the finger, or it can spontaneously occur as a function of time.

Phase a: The current rose from 1 mA to 30 mA. The voltage fell from 22 volts to 2.5 V.

Phase b: If component II is tapped mechanically during Phase a supra – it can be reversed as follows: The current dropped from 30 Ma to 10 Ma. The voltage shot up from 5 volts to over 250 volts (off scale).

Throughout Phase a and Phase b, all hydrolysis has ceased. It was observed under the microscope that the inner surface of the outer electrode was thickly covered with hydrogen gas bubbles. It was reasoned that the hydrogen gas bubbles had become trapped in the electrostricted layer, because the water molecule tetrahedrons had flipped so that the S+ hydrogen apices had entered the Helmholtz layer and were absorbed to the electronegative charge of the electrode. This left the S- lone pair apices facing the electrostricted layer. This process bound the newly forming H.sup.+ ions which blocked the reaction

$H^+ + H^+ + 2e \rightarrow H_2$ (gas)

STAGE F

Region C: It was found that the barrier effect could be unblocked by some relatively simple procedures:

(a) Reversing the output electrodes from Component I to Component II, and/or:

(b) Mechanically tapping the Component III cell at a frequency T/2 = 1.5 seconds per tap.

These effects are shown in FIG. 12 and induce the drop in barrier potential from:

$$\left.\begin{array}{l} E = /250 \text{ volts to } 4 \text{ volts} \\ I = 10 \text{ mA to } 1 \text{ mA} \end{array}\right\} = 4\ mw. \text{ (final state)}$$

Upon unblocking of the barrier effect, electrolysis of water resumed with renewed bubble formation of hydrogen gas.

The barrier potential problem has been solved for practical application by lowering the high dielectric constant of pure water, by adding salts (NaCl, KOH, etc.) to the pure water thereby increasing its conductivity characteristics. ***For optimum efficiency the salt concentration need not exceed that of sea water (0.9% salinity)*** in Section 3, "Thermodynamics of the Invention", it is to be understood that all water solutions described are not "pure" water as in Section B, but refer only to salinized water.

Section 3 – The Thermodynamics of the Invention (Saline Water)

Introduction (water, hereinafter refers to salinized water)

The thermodynamic considerations in the normal operations of Components I, II, and III in producing hydrogen as fuel, and oxygen as oxidant during the electrolysis of water, and the combustion of the hydrogen fuel to do work in various heat engines is discussed in this section.

In chemical reactions the participating atoms form new bonds resulting in compounds with different electronic configurations. Chemical reactions which release energy are said to be exergonic and result in products whose chemical bonds have a lower energy content than the reactants. The energy released most frequently appears as heat. Energy, like matter, can neither be created nor destroyed according to conservation law. The energy released in a chemical reaction plus the lower energy state of the products is equal to the original energy content of the reactants. The burning of hydrogen occurs rather violently to produce water as follows:

$2H_2 + O_2 \rightarrow 2H_2O$ - ΔH 68.315 Kcal/mol (this is the enthalpy, or heat of combustion at constant pressure)

[18 gms = 1 mol (mole)]

The chemical bonds of the water molecules have a lower energy content than the hydrogen and oxygen gases which serve at the reactants. Low energy molecules are characterized by their ability. High energy molecules are inherently unstable. These relations are summarized in the two graphs of FIG. 14. It is to be noted that FIG. 14 (b) shows the endergonic reaction aspect of the invention when water is decomposed by electrolysis into hydrogen and oxygen. FIG. 14 (a) shows the reaction when the hydrogen and oxygen gases combine, liberate energy, and re-form into water. Note that there is a difference in the potential energy of the two reactions. FIG. 14 (c) shows that there are two components to this potential energy. The net energy released, or the energy that yields net work is labeled in the diagram as Net Energy released, and is more properly called the free energy change denoted by the Gibbs function, $-\Delta G$. The energy which must be supplied for a reaction to achieve (burning) spontaneity is called the activation energy. The sum of the two is the total energy released. A first thermodynamic subtlety of the thermodynamic device of the invention is noted in Angus McDougall's *Fuel Cells*, Energy Alternative Series, The MacMillan Press Ltd., London, 1976, page 15 it is stated:

"The Gibbs function is defined in terms of the enthalpy H, and the entropy S of the system:

$G = H - T S$ (where T is the thermodynamic temperature)

A particularly important result is that for an electrochemical cell working reversibly at constant temperature and pressure, the electrical work done is the net work and hence,

$\Delta G = -w_e$

For this to be a reversible process, it is necessary for the cell to be on 'open circuit,' that is, no current flows and the potential difference across the electrodes is the EMF, E. Thus,

$\Delta G = -zFE$

(where F is the Faraday constant – the product of the Avogadro Constant + $N_A = 6.022045 \times 10^{23}$ mole^{-1}, and the charge on the electron, e = $1.602\ 189 \times 10^{-19}$ C -- both in SI units; and z is the number of electrons transported.) when the cell reaction proceeds from left to right."

It is to be noted that the activation energy is directly related to the controlling reaction rate process, and thus is related to the Gibbs free energy changes.

The other thermodynamic subtlety is described by S. S. Penner in his work: Penner, S. S. and L. Icerman, *Energy*, Vol-II, Non-Nuclear Energy Technologies. Addison-Wesley Publishing Company, Inc. Revised Edition, 1977. Reading, Mass. Page 140 ff.

"It should be possible to improve the efficiency achieved in practical electrolysis to about 100% because, under optimal operating conditions, the theoretically-attainable energy conversion by electrolysis is about 120% of the electrical energy input. The physical basis for this last statement will now be considered.

"A useful definition for energy efficiency in electrolysis is the following: the energy efficiency is the ratio of the energy released from the electrolysis products formed (when they are subsequently used) to the energy required to effect electrolysis. The energy released by the process

H_2 (gas) + (½)O_2 (gas) → H_2O (liquid)

under standard conditions (standard conditions in this example are: (1) atmospheric pressure = 760 mm Hg and (2) temperature = 298.16° K. = 25° C. = 77° F.) is 68.315 Kcal and is numerically equal to the enthalpy change (ΔH) for the indicated process. On the other hand, the minimum energy (or useful work input) required at constant temperature and pressure for electrolysis equals the Gibbs free energy change (ΔG). There is a basic relation derivable from the first and second laws of thermodynamics for isothermal changes, which shows that

$\Delta G = \Delta H - T\Delta S$

where ΔS represents the entropy change for the chemical reaction. The Gibbs free energy change (ΔG) is also related to the voltage (E) required to implement electrolysis by Faraday's equation, viz.

$E = (\Delta G/23.06n)$ volts

where ΔG is in Kcal/mol and n is the number of electrons (or equivalents) per mol of water electrolyzed and has the numerical value 2.

"At atmospheric pressure and 300° K., ΔH = 68.315 Kcal/mol of H_2O (i) and ΔG = 56.62 Kcal/mole of H_2O (i) for the electrolysis of liquid water. Hence, the energy efficiency of electrolysis at 300° K. is about 120%."

$$\frac{\Delta G}{\Delta G} = 120\%$$

"(When) H_2 (gas) and O_2 (gas) are generated by electrolysis, the electrolysis cell must absorb heat from the surroundings, in order to remain at constant temperature. It is this ability to produce gaseous electrolysis products with heat absorption from the surroundings that is ultimately responsible for energy-conversion efficiencies during electrolysis greater than unity."

Using the criteria of these two authorities, it is possible to make a rough calculation of the efficiency of the present invention.

Section 4 – Thermodynamic Efficiency of the Invention

Efficiency is deduced on the grounds of scientific accounting principles which are based on accurate measurements of total energy input to a system (debit), and accurate measurements of total energy (or work) obtained out of the system (credit). In principle, this is followed by drawing up a balance sheet of energy debits and credits, and expressing them as an efficiency ration, η.

$$\eta = \frac{\text{Credit}}{\text{Debit}} = \frac{\text{Energy Out}}{\text{Energy In}} = <1$$

The energy output of Component I is an alternating current looking into a highly non-linear load, i.e., the water solution. This alternating current generator (Component I) is so designed that at peak load it is in resonance (Components I, II, III), and the vector diagrams show that the capacitive reactance, and the inductive reactance are almost exactly 180° out of phase, so that the net power output is reactive, and the dissipative power is very small. This design insures minimum power losses across the entire output system. In the experiments which are now to be described the entire emphasis was placed on achieving the maximum gas yield (credit) in exchange for the minimum applied energy (debit).

The most precise way to measure the applied energy to Components II and III is to measure the Power, P, in Watts, W. This was done by precision measurements of the volts across Component II as root mean square (rms) volts; and the current flowing in the system as rms amperes. Precisely calibrated instruments were used to take these two measurements. A typical set of experiments (using water in the form of 0.9% saline solution = 0.1540 molar concentration) to obtain high efficiency hydrolysis gave the following results:

rms Current = I = 25 mA to 38 mA (0.025 A to 0.038 A)

rms Volts = E = 4 Volts to 2.6 Volts

The resultant ratio between current and voltage is dependent on many factors, such as the gap distance between the center and ring electrodes, dielectric properties of the water, conductivity properties of the water, equilibrium states, isothermal conditions, materials used, and even the presence of clathrates. The above current and voltage values reflect the net effect of various combinations of such parameters. The product of rms current, and rms volts is a measure of the power, P in watts:

P = I x E = 25 mA x 4.0 volts = 100 mW (0.1 W)

P = I x E = 38 mA x 2.6 volts = 98.8 mW (0.0988 W)

At these power levels (with load), the resonant frequency of the system is 600 Hz (.+-.5 Hz) as measured on a precision frequency counter. The wave form was monitored for harmonic content on an oscilloscope, and the nuclear magnetic relaxation cycle was monitored on an X-Y plotting oscilloscope in order to maintain the proper hysteresis loop figure. All experiments were run so that the power in Watts, applied through Components I, II, and III ranged between 98.8 mW to 100 mW.

Since, by the International System of Units – 1971 (SI), One-Watt-second (Ws) is exactly equal to One Joule (J), the measurements of efficiency used these two yardsticks (1 Ws=1 J) for the debit side of the measurement.

The energy output of the system is, of course, the two gases, hydrogen (H_2) and oxygen (½ O_2), and this credit side was measured in two laboratories, on two kinds of calibrated instruments, namely, a Gas Chromatography Machine, and, a Mass Spectrometer Machine.

The volume of gases, H_2 and $(½)O_2$, was measured as produced under standard conditions of temperature and pressure in unit time, i.e., in cubic centimeters per minute (cc/min), as well as the possibly contaminating gases, such as air oxygen, nitrogen and argon; carbon monoxide, carbon dioxide, water vapor, etc.

The electrical, and gas, measurements were reduced to the common denominator of Joules of energy so that the efficiency accounting could all be handled in common units. The averaged results from many experiments follow. The Standard Error between different samples, machines, and locations is .+-.10%, and only the mean was used for all the following calculations.

Section 5 – Endergonic Decomposition of Liquid Water

Thermodynamic efficiency for the endergonic decomposition of liquid water (salinized) to gases under standard atmosphere (754 to 750 mm Hg), and standard isothermal conditions @ 25° C. = 77° F. = 298.16° K., according to the following reaction:

$H_2O(1) \rightarrow H_2\ (g) + (½)O_2\ (g) + \Delta G$ 56.620 KCal/mole

As already described, ΔG is the Gibbs function (FIG. 14b). A conversion of Kcal to the common units, Joules, by the formula, One Calorie = 4.1868 Joules was made.

ΔG = 56.620 Kcal x 4.1868 J = 236,954 J/mol of H_2O (1) where, 1 mole is 18 gms.

ΔG = the free energy required to yield an equivalent amount of energy from H_2O in the form of the gases, H_2 and (½)O_2.

To simplify the calculations, the energy required to produce 1.0 cc of H_2O as the gases, H_2 and (½)O_2 was determined. There are (under standard conditions) 22,400 cc = V, of gas in one mole of H_2O. Therefore,

$$\frac{\Delta G}{V} = \frac{236{,}954\ \mathrm{J}}{22{,}400\ \mathrm{cc}}\ 10.5783\ \mathrm{J/cc}$$

The electrical energy required to liberate 1.0 cc of the H_2O gases (where H_2 = 0.666 parts, and (½)O_2 = 0.333 parts, by volume) from liquid water is then determined. Since P = 1 Ws = 1 Joule, and V=1.0 cc of gas = 10.5783 Joules, then,

$$\begin{aligned} PV = 1\ \mathrm{J} \times 10.5783\ \mathrm{J} &= 10.5783\ \mathrm{J} \\ &= 10.5783\ Ws \end{aligned}$$

Since the experiments were run at 100 mW (0.1 W) applied to the water sample in Component II, III, for 30 minutes, the ideal (100% efficient) gas production at this total applied power level was calculated.

0.1 Ws x 60 sec x 30 min = 180.00 Joules (for 30 min)

The total gas production at Ideal 100% efficiency is,

180.00 J / 10.5783 J/cc = 17.01 cc H_2O (g)

The amount of hydrogen present in the 17.01 cc H_2O (g) was then calculated.

17.01 cc H_2O (gas) x 0.666 H_2 (g) = 11.329 cc H_2 (g)

17.01 cc H_2O (g) x 0.333 (½)O_2 (g) = 5.681 cc (½)O_2 (g)

Against this ideal standard of efficiency of expected gas production, the actual amount of gas produced was measured under: (1) standard conditions as defined above (2) 0.1 Ws power applied over 30 minutes. In the experiments, the mean amount of H_2 and (½)O_2 produced, as measured on precision calibrated GC, and MS machines in two different laboratories, where the S.E. is +-10%, was,

Measured Mean = 10.80 cc H_2 (g)
Measured Mean = 5.40 cc (½) O_2 (g)
Total Mean = 16.20 cc H_2O(g)

The ratio, η, between the ideal yield, and measured yield,

$$\eta = \frac{\text{Measured } H_2(g)}{\text{Ideal } H_2(g)} = \frac{10.80 \text{ cc}}{11.33 \text{ cc}} = 91.30\%$$

Section 6 – Energy Release

The total energy release (as heat, or electricity) from an exergonic reaction of the gases, H_2 and O_2, is given by,

$$H_2(g) + (\tfrac{1}{2})O_2(g) \longrightarrow H_2O\ (P) - \Delta H\ 68.315\ \text{Kcal/mol} =$$

$$(-\Delta H\ 286{,}021\ \text{Joules})/\text{mol}$$

It is possible (Penner, Op. Cit., p. 128) to get a total heat release, or total conversion to electricity in a fuel cell, in the above reaction when the reactants are initially near room temperature (298.16° K.), and the reactant product (H_2O) is finally returned to room temperature. With this authoritative opinion in mind, it is desirable to determine the amount of energy released (ideal) from the exergonic experiment. The total energy of 1.0 cc of H_2O (1), as above is:

$$1.0 \text{ cc } \Delta H = \frac{286{,}021 \text{ J/mol}}{22{,}400 \text{ cc/mol}} = 12.7687 \text{ J/cc } H_2O\ (1)$$

for H_2 = 12.7687 x 0.666 = 8.509 J/0.66 cc H_2 for O_2 = 12.7687 x 0.333 = 4.259 J/0.33 cc (½)O_2

The energy produced from the gases produced in the experiments in an exergonic reaction was,

16.20 cc H_2O (g) x 12.7687 J/cc H_2O = 206,8544 J.

The overall energy transaction can be written as,

$$\frac{\text{EXERGONIC}}{\text{ENDERGONIC}} = \eta = \frac{-\Delta H}{+\Delta G} = \frac{206.8544 \text{ J}}{180{,}000 \text{ J}} =$$

$$1.14919 = 114.92\%$$

In practical bookkeeping terms the balance of debits and credits, n = (-ΔH) - (+ΔG), so, n = 206.8544 J - 180.0 = + 26.8544 J (surplus).

Since, in the invention, the gas is produced where and when needed, there is no additional cost accounting for liquefaction, storage, or transportation of the hydrogen fuel, and the oxygen oxidant. Therefore, the practical efficiency, is

$$\eta_P = \frac{26.8544\ \text{J}}{180.0000\ \text{J}} =$$

$$14.919\%\ \text{(as net return on the original energy investment)}$$

In practical applications, the energy output (exergonic) of the Component II System can be parsed between the electrical energy required to power the Component I System, as an isothermal closed loop; while the ***surplus of approximately 15%*** can be shunted to an engine (heat, electrical, battery, etc.) that has a work load. Although this energy cost accounting represents an ideal model, it is believed that there is enough return (app. 15%) on the capital energy investment to yield a net energy profit that can be used to do useful work.

Conclusion

From the foregoing disclosure it will be appreciated that the achievement of efficient water splitting through the application of complex electrical waveforms to energized water molecules, i.e. tetrahedral molecules having bonding angles of 109°28′, in the special apparatus described and illustrated, will provide ample and economical production of hydrogen gas and oxygen gas from readily available sources of water.

It is to be understood that the specific forms of the invention disclosed and discussed herein are intended to be representative and by way of illustrative example only, since various changes may be made therein without departing from the clear and specific teachings of the disclosure. Accordingly, reference should be made to the following appended claims in determining the full scope of the method and apparatus of the present invention.

Andrija Puharich Lecture on YouTube

In this 50-minute lecture Puharich explains his invention and Patent given above. He provides necessary highlights on important factors and components, and also describes the background, comments on manufacturing costs and more. Tip: to fully understand it, study the text and video alternately and then combine them.

- PART 1: https://youtu.be/7oa0bFK6iNI
- PART 2: https://youtu.be/PAmQDpcfkMk
- PART 3: https://youtu.be/2mcEcys8-Ig
- PART 4: https://youtu.be/t_0Gty-RR90
- PART 5: https://youtu.be/4Ii0re4lKsU

Chapter 9.

THEORY: P.M. Kanarev — Low Voltage Electrolysis of Water

Doctor of Tech. Sc., Professor, head of Theoretical Mechanics Chair of the Kuban State Agrarian University, Russia

Who is Prof. Kanarev? See page 443.

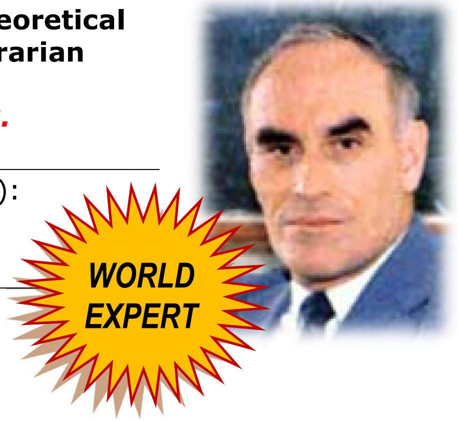

Watch this technology in action (video download):
http://guns.connect.fi/innoplaza/energy/story/Kanarev/video/VIDEOELECTROLYS.wmv

Contradictions of the Existing Theory of Water Electrolysis

American scientists Fleishmann and Pons have reported about obtaining of additional energy during water electrolysis in 1989 year and about the fact that cold nuclear fusion is the source of this energy [67]. Hundreds of experiments were made in various countries in order to check this fact [23], [28], [50], [51], [65], [67], [73], [79], [83], [103]. A part of the scientists confirmed it, and another part received a negative result [67], [74]. The cause of such state remains unclear. That's why let us analyse the water electrolysis process once again and try to make out with the essence of the processes, which take place [109].

The results of the given experiment put the main question: by which physical and chemical phenomenon is additional energy generated during usual water electrolysis? The first hypothesis: nuclear fusion at low temperature (cold nuclear fusion) is being checked from 1989 year, but still it has no definite confirmation [67], [76]. The second hypothesis assumes that there is a certain particle called "ersion", which is responsible for the emergence of additional energy [77]. But the main characteristics of this particle remain unknown, that's why it is necessary to check one more hypothesis: additional energy is extracted from energies of chemical bonds of water molecules.

The main purpose of electrolysis of water is obtaining of hydrogen, which is considered to be the most prospective energy carrier in the future [39], [41], [49], [56], [57]. It has been discovered quite recently that in some cases access energy is released when this process takes place [67]. If we want to find out its reason, we should analyses a classical method of hydrogen production by means of water electrolysis. It is described in reference books. Chemical reactions, which take place during this process, are used for the calculations of its parameters. They are considered to be clear and do not give rise to objections of both chemists and physicists. Let's consider if it is actually clear.

Cathode and anode reactions are described in the manual in such a way [2]. The following reaction takes place at the cathode

$$2e^- + 2H_2O \to H_2 + 2OH^-. \quad (257)$$

Two electrons, which have arrived from the cathode, react with two molecules of water forming hydrogen molecule H_2 and two ions of hydroxyl OH^-. Molecular hydrogen forms the bubbles of gaseous hydrogen (when the solution near the cathode has been saturated with hydrogen), and the ions of hydroxyl remain in the solution.

The following reaction takes place at the anode

$$2H_2O \to O_2 + 4H^+ + 4e^-. \quad (258)$$

Four electrons come to the anode from two molecules of water which is decomposed with the formation of an oxygen molecule and four ions of hydrogen.

Total reaction can be obtained if the equation (257) is multiplied by 2 and added together with the equation (258). It is put down in the following way

$$6H_2O \to 2H_2 + O_2 + 4H^+ + 4OH^-. \quad (259)$$

… in acid solutions with a high concentration of hydrogen ions, the following reaction cam take place at the cathode

$$2H^+ + 2e^- \to H_2^{\uparrow}. \quad (260)$$

Let’s close quotation marks and put the following question: how should be the symbol H^+ interpreted in this description of the essence of electrolysis process? Naturally, H^+ means positive ion of hydrogen atom, i.e. proton. But the chemists have managed to designate a positively charged ion of hydroxonium H_3O^+ with the same symbol. They have come to an agreement: to write H^+ instead of H_3O^+ for the purpose of simplification. We have nothing but guess: should we always understand a chemical symbol H^+ as a set of symbols H_3O^+ or no? If so, how should we distinguish the cases “yes” and “no”? Symbol H^+ is used in many other chemical reactions. We should note that it is not the author of the above-mentioned manual who should be blamed; he has acted in the way as others act.

If we agree with the process of electrolysis described in the given manual, it means that water solution has protons, which are designated with the help of the symbol H^+ by the author. As they have a positive charge, they move to the cathode; having obtained electron e^- from it, they form hydrogen atoms H, which, being connected, form the molecules H_2. It is impossible to interpret the formula in another way (258) and (260).

Besides, it appears from the formula (258) that at the anode the fusion process of the oxygen molecules from its atoms takes place, which should be accompanied by release of energy of 495 kJ/mole[45] [2]. It should be taken into account during the analysis of energy balance of water electrolysis process, but in modern chemistry they are not accustomed to carry out such analysis, because it gives lots of contradictions with the experiment.

The first contradiction

Let's introduce symbol H^+ for the designation of the proton only, as it should be. The hydrogen atom formation reaction is written in the following way

$$H^+ + e^- \rightarrow H. \qquad (261)$$

The hydrogen molecule formation reaction is presented in the following way

$$2H^+ + 2e^- = H_2 \qquad (262)$$

The hypothesis concerning the presence of free protons in various chemical solutions is frequently used in chemistry. By the appearance of plasma-electrolysis of water casts doubt on this hypothesis. The matter is that the proton is an active formation, which can exist only in the composition of various chemical compounds. If the conditions are created under which the proton is separated from the chemical compound, it lacks the existence phase in the free state almost completely. Having separated from one chemical element, it unites with other one at once.

Evidently there are such conditions when the proton of hydrogen atom having separated from water molecule is connected with the electron emitted by the cathode and forms hydrogen atom. It is known that hydrogen atoms exist at the temperature of 5,000÷10,000°C [52]. It means that plasma with such temperature should be formed at a certain density of hydrogen atoms in the unit of volume. As it is known, no atomic hydrogen plasma is formed during low-voltage electrolysis of water. It means that there is no atomic hydrogen fusion process in this case.

Hydrogen molecule fusion energy (436 kJ/mole) is known in modern chemistry, that's why we can calculate approximate quantity of energy, which should be released in electrolytic solution during production of one cubic meter of hydrogen [2], [32], [52].

One cubic meter of hydrogen contains 1000/22.4=44.64 mole of molecular hydrogen. Energy is released at its fusion

$$H + H \rightarrow H_2 + (436 \cdot 44.64) = 19463.0 kJ/m^3 \qquad (263)$$

Modern electrolyzer consume nearly 4 kWh of electric power or (3600 x 4)=14400 kJ for obtaining one cubic meter of hydrogen. Taking into consideration energy (19463.0) of

---

[45] (1 mole of water = 18 gram)

fusion of one cubic meter of hydrogen and energy (14400) consumed by its production, we shall find water electrolysis process efficiency index

$$\frac{19463.0}{14400}=1.35 \qquad (264)$$

Thus, a simple and rigorous calculation shows that the process of low voltage water electrolysis should be accompanied by a release of 35% of additional heat energy in the cathode area only.

Let's pay attention to the fact that this index takes into consideration only energy of the fusion of hydrogen molecules and does not take into account energy of the fusion of hydrogen atoms as well as energy content of produced hydrogen.

Efficiency index (264) confirms the possibility of obtaining of additional energy, but only under the condition that electrolysis of water is accompanied with fusion process of hydrogen molecules. Lack of additional energy in the operation of modern industrial electrolyzers makes us draw an absurd conclusion (on the face of it) concerning the lack of fusion process of hydrogen molecules from its atoms. Later on we'll show that it is so indeed.

If we agree that there is a fusion process of the oxygen molecules, the following reaction should take place in the anode area:

$$2OH^- \rightarrow O_2+2H+495kJ/mol \qquad (265)$$

It means that the oxygen molecules and the hydrogen atoms H should be formed. But, as it is known, only oxygen can be released in the anode area during low-voltage water electrolysis.

It is known that during low-voltage water electrolysis the process of formation of $1m^3$ (44.64 moles) of hydrogen is accompanied by a release of 22.32 moles of molecular oxygen. ***As a result, 495 x 22.32=11048.80 kJ of energy should be released. If we add this energy to hydrogen molecule fusion energy, we'll get***

$$11048{,}80+19463{,}00=30511{,}80kJ \qquad (266)$$

Total index of energy efficacy of low-voltage process of water electrolysis should be as follows:

$$K_0=\frac{30511{,}80}{14400}=2{,}12. \qquad (267)$$

It is known that heat energy index of modern low-voltage process of water electrolysis is less than unit. It means that there is no fusion of the molecules of hydrogen and oxygen in this process.

A question arises: how are the molecules of hydrogen and oxygen formed during low-voltage process of water electrolysis? Later on, we’ll show that the molecules of hydrogen and oxygen are released from the cluster chains in the formed conditions, i.e. without the bond process of separate atoms and molecules.

Thus, if chemical reactions (257) and (258) took place in modern electrolyser, they would have efficiency index more than one,… as it follows from the ratio (264). The lack of additional energy during the low voltage process of water electrolysis is the result of formation of hydrogen molecules according to the diagram shown in Fig. 78.

The second contradiction

Now let us check the correspondence of the reality of binding energy of hydrogen atoms in water molecules accepted in modern chemistry. Modern chemistry theory gives values of binding energies of hydrogen atoms with oxygen atom in water molecule, ***but they differ from experimental values of these energies.***

For example, in the book in chemistry [2] the following value of binding energy E_{δ} of one hydrogen atom (let us call it the first one - H') with oxygen atom ($H'-OH$) in water molecules H_2O E_{δ}=424 kJ per mole is given [2]. Let’s transform it into electron-volts calculating on one water molecule

$$E_{\delta} = \frac{424 \cdot 1000}{6.02 \cdot 10^{23} \cdot 1.6 \cdot 10^{-19}} = 4.40 eV. \qquad (268)$$

Binding energy of the second H'' hydrogen atom with oxygen atom ($H''-OH$) in water molecule H^2O is equal to E_{δ}=502 kJ per mole [2]. In terms of electron-volts calculating on one bond we’ll have

$$E_{\delta} = \frac{502 \cdot 1000}{6.02 \cdot 10^{23} \cdot 1.6 \cdot 10^{-19}} = 5.21 eV. \qquad (269)$$

If the hydrogen atoms in water molecule have binding energies corresponding to energies given in the formulas (268) and (269), cleavage of two bonds with energies of 4.40 eV should result in the formation of the hydrogen molecule; an oxygen molecule should be formed when two bonds with energies of 5.21 eV are broken. The energy expenses for the formation of one cubic meter of hydrogen and oxygen being obtained will be: 424.00 x 44.64=18927.36 kJ and 502.00 x 22.32= 11204.64 kJ, respectively. Total energy expenses for production of one cubic meter of hydrogen will be: 18927.36+11204.64=30132.00 kJ or 30132.00/3600=8.37 kWh.

It is twice as much of the experimental value. Consequently, the above-mentioned (268) and (269) binding energies of the hydrogen atoms with the oxygen atom in water molecule do not correspond to reality.

In which experiments are the above-mentioned binding energies registered? The experiments connected with water electrolysis and spectroscopy are the most congenial. Let's take minimal expenses of energy for hydrogen production established experimentally 3.8 kW/h per m^3. Let's represent this energy in terms of kJ. 3.8 x 3600=13680 kJ. Taking into account the fact that molar volume of all gases is similar and is equal to 22.4 L, we'll find quantity of moles of molecular hydrogen in one cubic meter of hydrogen 1000/22.4=44.64 moles. Energy consumption per mole of hydrogen is 13680/44.64=306.45 kJ and per molecule

$$(306.45 \cdot 1000)/(6.02 \cdot 10^{23} \cdot 1.6 \cdot 10^{-19}) = 3.18 eV \qquad (270)$$

In order to form the hydrogen molecule during water molecule destruction, at least two bonds of water molecules should be destroyed; it means that mean energy per bond is 3.18/2=1.59 eV. The value does not match the result given the formulas (266) and (267). If we take into account inevitable energy losses during electrolysis, we have every reason to believe that energy 1.59 eV is congenial to binding energies of the electron in hydrogen atom (Table 5) when it is on the third energy level (1.51 eV). It is congenital to binding energy of the eight electron in oxygen atom (1.53 eV) when it is on the similar energy level (Table 21). It results in almost equal probability of separation of both protons and hydrogen atoms from water molecules. The detailed analysis of this process will be given below.

Thus, the above-mentioned tables have no binding energies, which correspond to the existing calculations of chemists (266), (267); vice verse, these tables contain binding energies resulting from out calculation of the existing process of water electrolysis.

So, we have every reason to believe that the electron in the first atom of hydrogen H^1 in water molecule and the 1st electron in oxygen atom are on the third energy levels.

As it is clear, existing theoretical chemistry has serious contradictions with an experiment, but chemists avoid the search of the reason of these contradictions, they do not take into consideration the arising questions. The answers to them can be obtained from the analysis results of water molecule structure [46].

We'll didn't find the answers to these questions within the framework of existing physical and chemical notions concerning the structure of water molecule and the process of its electrolysis, that's why we have only one possibility: to pay attention to the own results of the investigations in this field [8], [12], [13], [17], [18], [26], [33], [53], [70], [75], [109] and to take the water molecule structure, which originates from the atomic nucleus structures, of hydrogen (Fig. 50, a) and oxygen (Fig. 61), as the basis.

Models of Water Molecules and its Ions

Water can demonstrate a variety of properties. The possibilities of this variety are available due to the differences of water molecule structure. The information obtained by us allows discovering and analyses of the structural peculiarities of water molecule. We have shown that the electrons in the atom have no orbital movement; they interact with the nucleus like a rotating whipping top. As there are the electrons and the protons of the like electrical fields and magnetic ones with vividly expressed magnetic poles in the structure, it gives them the possibility to interact with each other and to limit their rapprochement. Due to this fact the bond between the valence electrons in the molecule and between the electrons and the protons in the atom can be depicted with the help of simple lines.

We have already noted that the bonds between the atoms in the molecule form the surface electrons, which we call valence electrons. Valence electrons of the atoms, which form a molecule, can get connected with each other or with the protons of the nuclei if the proton cell is free.

Hitherto, the water molecule models are depicted in such a way that the angle between the hydrogen atoms is 105º [46], [58], [109]. We do not know the way this value has been derived. But if we suppose that it corresponds to reality (we have doubt in it), the water molecule model will be such as it is shown in Fig. 71 taking into consideration the model of the atomic nucleus of oxygen (Fig. 28). This model gives the reason to believe that the electrostatic repulsive forces operating between the first (e1, P1) and the second (e2, P2) hydrogen atoms increase the angle between them up to 105º. But this model does not explain the reason of water expansion during freezing. If we imagine that the hydrogen atoms are connected with the axis electrons of the oxygen atom (Fig. 72), the reason of water expansion during its freezing can be explained.

As during cooling the electrons emit photons and approach the atomic nucleus, six ring electrons of the oxygen atom in water molecule (Fig. 72) approach the atomic nucleus and remove the axial electrons from the nucleus by their static field. In this case the distance between the hydrogen atoms arranged on the water molecule axis is increased. Due to it, the length of the bond with the neighbouring water molecules is increased during its freezing. Taking it into consideration we prefer the water molecule model shown in Fig. 72, and we'll use this model only in the future.

The structure of hydrogen atom (Fig. 50) demonstrates that if this atom unites with the first electron of oxygen atom by its only electron, the proton will be on the surface of the molecule and will form a zone with positive charge, which is generated by the proton of hydrogen atom (Fig. 72). The proton of the second hydrogen atom forms the same zone. It is connected with the second electron of oxygen atom (Fig. 72).

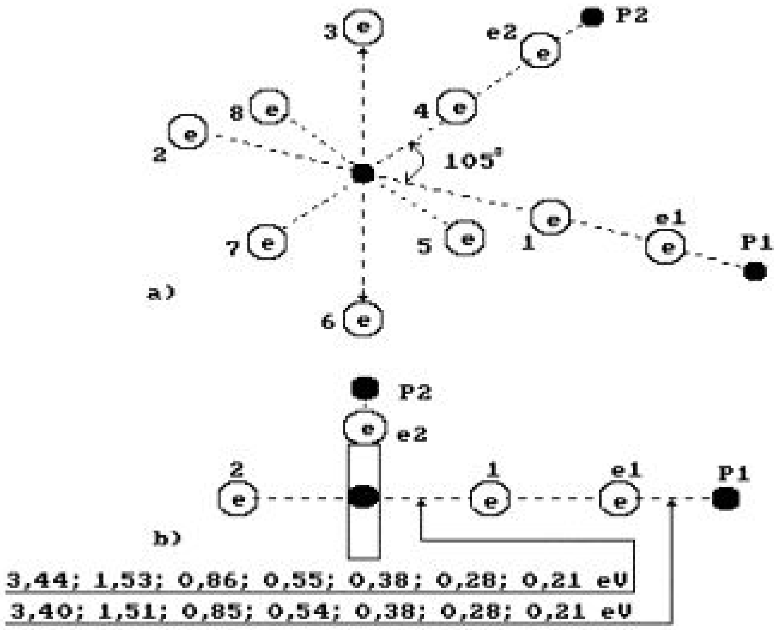

Fig. 71. Water molecule structure with the angled of 105º between the hydrogen atoms

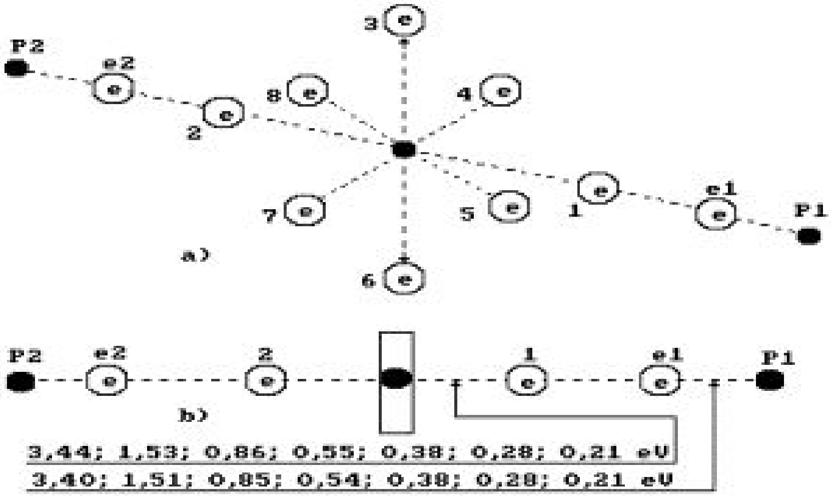

Fig. 72. Diagram of the first (charged) model of water molecule

1, 2, 3, 4, 5, 6, 7, 8 are the numbers of the electrons of oxygen atom; P is the nuclei of hydrogen atoms (protons); e_1 and e_2 are the numbers of hydrogen electrons.

The negatively charged zone is formed by the oxygen atom electrons arranged on a ring round the oxygen atom axis [2], [54], [55], [58]. Let's pay attention to the fact that binding energies between the proton P_1 and the electron e_1 (Fig. 72) in the hydrogen atom as well as binding energies of the first electron e_1 of the oxygen atom with its nucleus have the values, which are close in their magnitude on the corresponding energy levels (Table 35, 36) and Fig. 72.

The new theory puts the following questing before us: how many electrons are in water molecule? Do the first and the second electrons of oxygen atom always remain in their cells when the electrons of hydrogen atoms come nearer to them? We have no definite answer to this question and we suppose that all possible variants are realized. In some cases the first and the second electrons of oxygen atom are absent in water molecule, and their places are occupied by the electrons of hydrogen atoms. But the presence of these electrons in water molecule is not excluded, because when valence electrons of the atoms unite, they are connected not only with the protons of the neighboring atom, but also with its valence electrons. Taking into consideration the above-mentioned facts, the structure of water molecule can differ in quantity of electrons in it, and it is necessary to give a name to these structures.

We have called the structure of water molecule with a complete set of electrons the first model (Fig. 72). There exist the possibilities of the formation of water molecules not with ten electrons, but with eight electrons (Fig. 73). Let's call such model the second one.

The main differences between the first (Fig. 72) and the second (Fig, 73) models of water molecule are in the fact that two coupled electrons are in the cells of the first electron and the second (axial) one of the oxygen atom of the first model of water molecule; in the second model of water molecule, one electron is situated in these cells, and we have every reason to call them non-coupled electrons (Fig. 73).

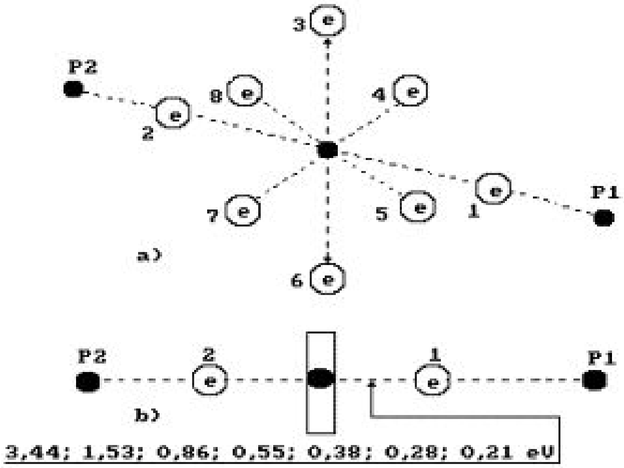

Fig. 73. Diagram of the second (discharged) model of water molecule

When coupled electrons are arranged only at one end of the oxygen atom axis (to the right), we'll call such model the third one (Fig. 74).

If the hypothesis concerning different quantity of electrons in water molecules is confirmed, this fact will be a decisive one in obtaining surplus energy during water electrolysis. It will determine the reason of positive and negative results of various experiments, which have been carried out for the check of the fact of existence of additional energy during water electrolysis [67]. If water contains more charged molecules, the experiment will give a positive result. When there are many discharged molecules, the result will be negative. The approximate calculations demonstrate availability of a difference in mass of one liter of charged and discharged water. It can be registered with the help of modern measurement devices.

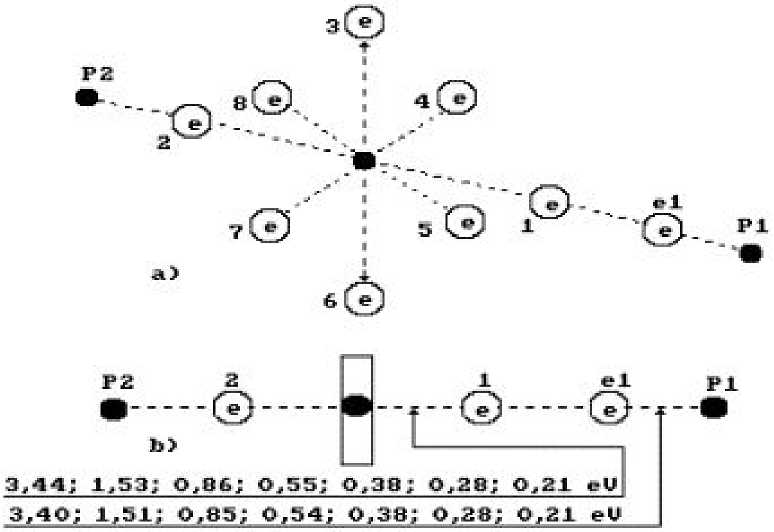

Fig. 74. Diagram of the third model of water molecule.

Later on we'll show that the water molecule clusters, which have positive and negative charges, are formed before the thunderstorm discharges in the clouds. Different temperature in the clouds is the reason of the division of the water molecule clusters. Now we have an opportunity to calculate this difference and to try to model the thunderstorm discharge process and to make it a controlled one.

It is known that water can have alkali or acid properties. Alkali properties are formed at the expense of the increased content of hydroxyl OH^- in water (Fig. 75).

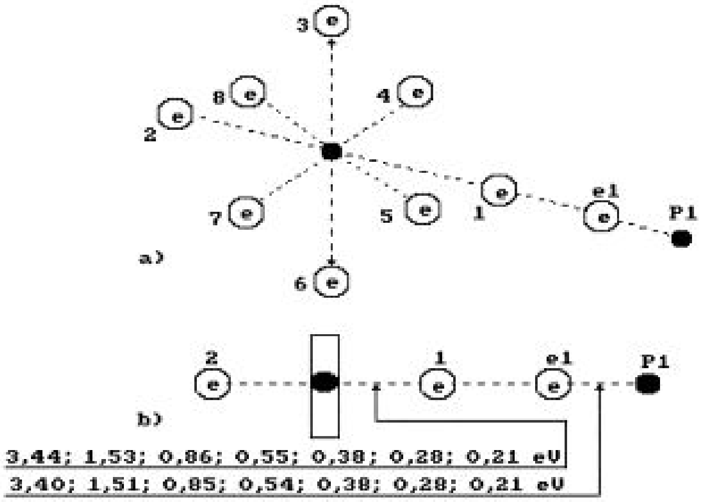

Fig. 75. Diagram of structure of hydroxyl OH^-

As it is considered now, acid properties of water are formed by free protons H^+, but we do not agree with this idea, because the proton is a very active formation, that's why it cannot exist in water in a free state. Acid properties of water are formed by an increased content of positively charged ions of hydroxonium H_3O^+ (Fig. 76).

In all models of water molecules (Fig. 72-74) the third – eighth electrons of oxygen atom remains free forming a negative potential zone on its surface. The values of the third and the fourth potentials of ionization of the oxygen atom point out to the fact that the ring electrons are arranged nearer to the nucleus of the oxygen atom than the axial ones, that's why the majority of their electrical and magnetic lines of force is included in the bond with the nucleus of the oxygen atom, that's why they are less a active than the first electron and the second one. One of the ring electrons should be lifted in its cells and be removed from the nucleus of the oxygen atom in order to be connected with the proton or the electron of the neighboring atom.

In order to realize such process it should absorb the proton of the environment.

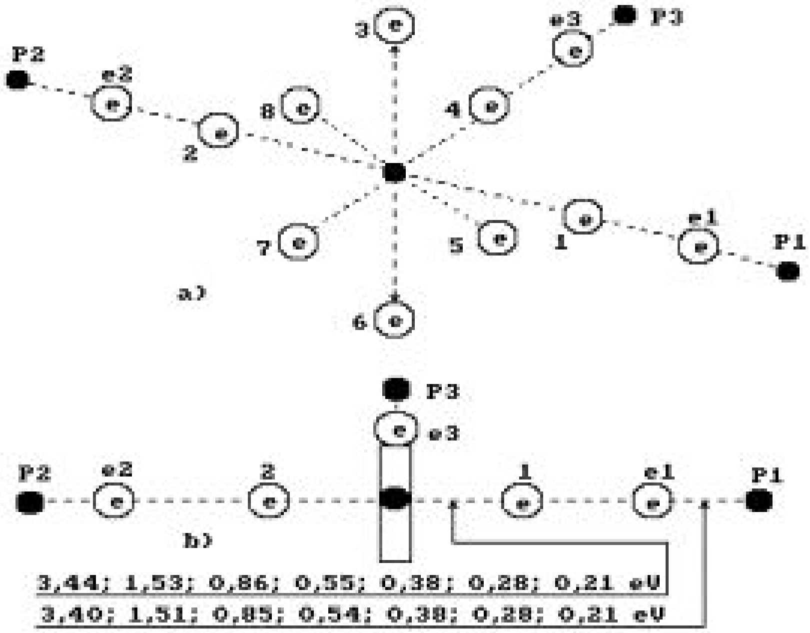

Fig. 76. Structure of the ion of hydroxonium H_3O^+

If it takes place, it will move off the nucleus, come nearer to the surface of the atom, and the conditions will appear for the connection of the lines of force of its magnetic field with the lines of force of magnetic field of the proton or the electron. If one of circular electron of oxygen atom unites with the proton, the ion of hydroxonium H_3O^+ is formed, which forms acid properties of water (Fig. 76). If the events develop in such a way, three zones with positive potential are formed on the surface of water molecule, and it becomes a positively charged ion H_3O^+, which is called hydroxonium (Fig. 76). As we have already proved that there are no protons in free state in electrolytic solution, it means that acid properties of the solution are determined not by the proton (positive ion H^+), but by the positive ion of hydroxonium H_3O^+. We know that the process of the removal of the electron from the atomic nucleus is accompanied by the absorption of the photons form the environment. That's why hydroxonium ion formation process will be an endothermic one.

Hydrogen peroxide H_2O_2 is formed from water as well. There are two oxygen atoms 2O and two hydrogen atoms 2H in its structure (Fig. 77).

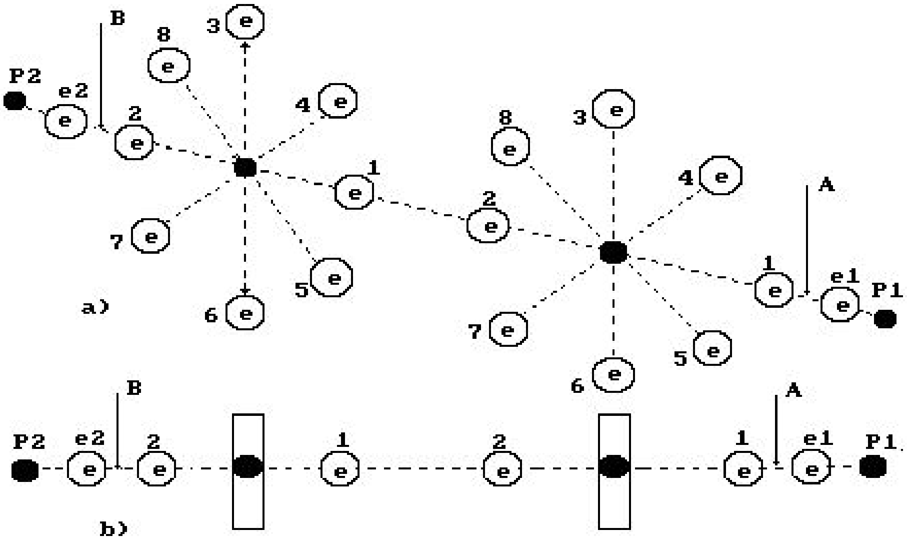

Fig. 77. Diagram of hydrogen peroxide model H_2O_2

Binding energies between the protons and the electrons taken from the calculation results of the spectra of the atoms and the ions are given in the diagrams of water molecules (Figs 72-74), hydroxyl (Fig. 72) and hydroxonium (Fig. 73). In our previous publications [70] we have treated with faith the calculation of binding energies between the atoms in the molecules carried out by chemists that are why we have taken a part of the values of these energies from the chemical calculations and a part from the spectrum calculation results. But we have already shown that binding energies of the electrons with atomic nuclei determined not with the help of chemical calculations, but from the results of spectroscopy of the atoms and the ions are closer to the data obtained during water electrolysis. That's why we'll use mainly these data (Figs 72-76).

New Theory of Low Voltage of Process of Water Electrolysis

Having the obtained information at our disposal, let us begin the search of a new structure of water molecule and a new theory of the process of its electrolysis. This theory should eliminate the existing contradictions in the description of water electrolysis and give answers to the following fundamental questions:

1 - Why do the theoretical calculations demonstrate availability of additional energy during water electrolysis and why do the existing industrial electrolyzers fail to generate it?

2 - Why do the existing theoretical values (264-265) of binding energies of hydrogen atoms in water molecules fail to correspond to experimental values of these energies during water electrolysis?

First of all, in order to find replies for these questions it is necessary to have a theory, which would allow calculating energies of chemical bonds of the electrons with atomic nuclei when they are at any energy level. As the atoms of hydrogen and oxygen play the main role during water electrolysis, we'll determine binding energies of their electrons with atomic nuclei. We have given some of these calculations, but as they are very important, we'll give them once more having added new information.

Taking into consideration that ionization energy E_i of hydrogen atom is equal to binding energy E_1 of the electron with the nucleus corresponding to the first energy level $E_i = E_1 = 13.598 eV$ and using formulas (212) and (213) we'll get energies of the photons E_{ph} emitted or absorbed by the electron, and binding energies E_b of the electron with the atomic nucleus corresponding to n energy levels (Table 35).

Table 35. Spectrum of hydrogen atom

Value	n	2	3	4	5	6
E_{ph} (exp)	eV	10.20	12.09	12.75	13.05	13.22
E_{ph} (theor.)	eV	10.198	12.087	12.748	13.054	13.22
E_b (theor.)	eV	3.40	1.51	0.85	0.54	0.38

As it is clear (Table 35), there are no energies E_b which are obtained by the chemists in their calculations (266-269) in the row of binding energies of the electron with the nucleus of hydrogen atom. But energies similar to experimental value (1.59 eV) by which gases are released during water electrolysis are available in the row of binding energies of the electron of hydrogen atom (1.51 eV) (Table 35) and the eighth electron of oxygen atom (1.53 eV) (Table 36). These energies correspond to the existence of the electrons on the third energy levels.

Thus, among binding energies of the electron of hydrogen atom with its nucleus there are energies (1.51eV) similar to experimental value (1.59eV). Let's determine the same energies for the oxygen atom electrons.

As the surface electrons of the atoms take part in chemical reactions namely, let us consider only the calculation of energies E_{ph}, the absorbed and emitted photons as well as binding energies E_b of the electrons with the nuclei of the first two surface electrons of oxygen atom.

Ionization energy of the first electron of oxygen atom is equal to E_i =13.618 eV, and its binding energy with the atomic nucleus corresponding to the first energy level is equal to E_1=13.752 eV. Energy indices calculation of this electron according to the formulas (212) and (213) gives the following results (Table 36).

Table 36. Spectrum of the 1st electron of oxygen atom

Value	n	2	3	4	5	6
E_{ph} (exp)	eV	10.18	12.09	12.76	13.07	13.24
E_{ph} (theor.)	eV	10.16	12.09	12.76	13.07	13.24
E_b (theor.)	eV	3.44	1.53	0.86	0.55	0.38

As it is clear, binding energies of the first electron of oxygen atom (Table 36) practically coincide with the corresponding binding energies of the electron of hydrogen atom (Table 35). The energy corresponding to the third level (1.53eV) is similar to experimental value of gas release energy (1.59 eV) during water electrolysis. Theoretical values of binding energies of the electron of the first atom of hydrogen and the first electron of oxygen atom in water molecule obtained on the grounds of spectrum formation law (212) and (213) are similar to the experimental values of this energy.

Now we have every reason to suppose that the first electron of oxygen atom establishing the bond with the first atom of hydrogen in water molecule is on the third ($E_b = 1.53 eV$) energy level (Table 36).

When we have analysed the regularity of the change of binding energies of the electrons of the oxygen atom and other atoms with their nuclei, we have found that they have almost equal binding energies with the atomic nuclei in case all electrons are present in the atom. That's why we'll consider that water molecule symmetry provides equal binding energies with the nucleus of its first electron and the second one.

Thus, we have removed the second contradiction between the theory and the experiment in water electrolysis. Now experimental value of binding energy of the electron of hydrogen atom with the first electron of oxygen atom in water molecule coincides with theoretical value of this energy.

Low voltage process of water electrolysis takes place when voltage is (1.6-2.3) V and strength of current of hundreds of amperes. Large strength of current proves large expenditure of electrons. As the first electron of the oxygen atom is situated from its nucleus at the longest distance than other electrons, the proton of the hydrogen atom, which is bond with this electron, is the first to come nearer to the cathode and gets the electron e_k from it (Fig. 78, a). After each of two water molecules gets the electron e_k, their surface electrons are united at once and form a cluster of two water molecules (Fig.

78, a, b), which are connected by two electrons e_k emitted by the cathode. As it is clear, the orthohydrogen[46] molecule is in the chain of the protons and the electrons, which unite two water molecules (Fig. 78, a, b). As the electrons, which have arrived from the cathode, have passed the free state phase, hydrogen molecule fusion in this chain is accompanied by release of energy.

It is clear from Fig. 78 that two electrons e_k emitted by the cathode are used for the formation of one hydrogen molecule. In accordance with Faraday's law, in this case two faraday coulombs of electricity are used for the formation of one mole of hydrogen 2F=2×96485=192980 or 192980/3600=53.60 A×h/mol. If electrolysis takes place at voltage of 1.70 V, for production of one mole of hydrogen E=I×V=53.6×1.70=91.12 W/h will be spent, and for production of 1m^3 E=(1000/22.4)×91.12=1476 kJ/m^3 = 4.10 kWh will be spent.

As it is clear, the calculations with the use of Faraday's law give a result, which coincides with the experiment almost completely. If hydrogen formation were accompanied by the process of fusion of its molecules, energy would be released

$$H + H \rightarrow H_2 + (436 \cdot 44.64) = 19463.0 kJ/m^3 = 5.41 kWh/m^3.$$

If we take into account only the hydrogen molecule fusion and do not take into account the oxygen molecule fusion, heat energy efficacy index should be as follows:

$$K_T = 5.41/4.10 = 1.31.$$

But it is well known that total heat energy efficacy index of modern electrolyzers is less than unit. Why? We'll try to find an answer to this question (Fig. 78).

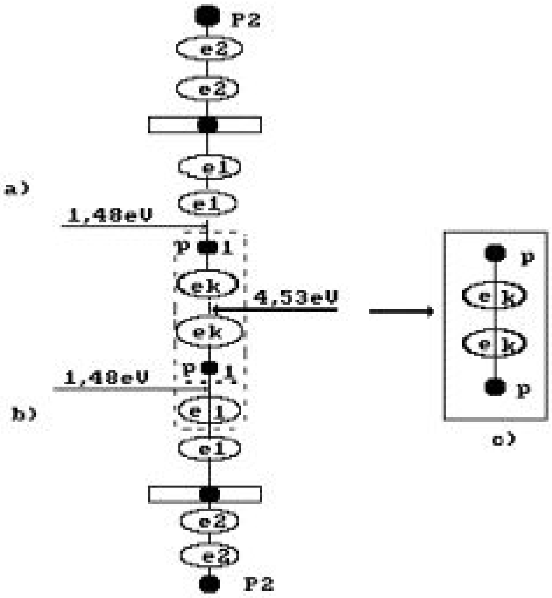

Fig. 78. Diagram of formation of the orthogydrogen molecule (s. Fig. 53, a)

Fusion energy of one mole of the hydrogen molecules is equal to 436 kJ. Let's convert this energy in electron volts in the calculation per molecule [109].

$$\frac{436 \cdot 1000}{6.02 \cdot 10^{23} \cdot 1.6 \cdot 10^{-19}} = 4.53 eV \quad (271)$$

The value of this energy is shown to the right of the hydrogen molecule situated in a cluster chain (Fig. 78). To the left, binding energies 1.48 eV of the hydrogen atoms with

---

[46] See "Orthohydrogen vs. parahydrogen" in the Glossary.

the oxygen atoms in water molecule are shown. Energy 4.53 eV of fusion of the hydrogen molecule redistributes binding energies in the cluster chain in such a way that binding energies 1.48 eV of the hydrogen atoms with the oxygen atoms in water molecules become equal to zero, and the orthohydrogen molecule is separated from the cluster chain (Fig. 78, c).

Thus, the difference between energy 4.53 eV of fusion of the hydrogen molecule and total binding energy (1.48+1.48)=2.96 eV becomes equal to (4.53-2.96)=1.57 eV. This energy is spent to heating the electrolytic solution.

That's why during 1m^3 of hydrogen is released not 44.64x436=19463 kJ will be released, but the following quantity of energy

$$\frac{1000 \cdot 1.48 \cdot 6.02 \cdot 10^{23} \cdot 1.6 \cdot 10^{-19}}{22.4 \cdot 1000} = 6364 kJ \qquad (272)$$

Near the cathode the following chemical reaction will take place

$$2H_2O + 2e^- \Rightarrow H_2 + 2OH^- + 1.48eV. \qquad (273)$$

It is natural that quantity of heat energy 4058 kJ is a part of total energy 14760 kJ, which is spent for production of one cubic metre of hydrogen [109]. Thermal effectiveness index of this process is

$$K_T = \frac{6364}{14760} = 0.44. \qquad (274)$$

If we take into account that energy content of one gram of hydrogen is equal to 142 kJ and cubic metre of this gas weighs 90 g, total energy effectiveness index will be

$$K_0 = \frac{6364 + 142 \cdot 90}{14760} = 1.33. \qquad (275)$$

We should note that we have not taken into consideration energy content of oxygen being obtained, because oxygen from the air is usually used when burning hydrogen.

Other variants of hydrogen molecules formation are possible. For example, let us pay attention to the structure of orthohydrogen, which is shown in Fig. 53, b. This structure is formed when the first hydrogen atoms of two water molecules of the first model come nearer to each other (Fig. 72) without the electron emitted by the cathode, i.e. without direct consumption of electric energy for hydrogen molecule formation (Fig. 79). According to Faraday's law, energy consumption for such hydrogen molecule formation process is equal to zero.

Fig. 79. Diagram of formation of the second model of orthohydrogen (s. Fig. 53, b); a) and b) of the diagram of water molecules; c) orthohydrogen

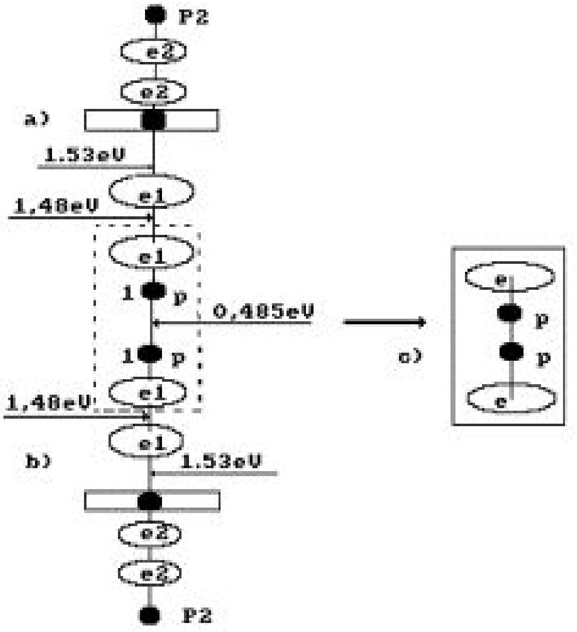

In this case, each of two water molecules gives one proton and one electron to the hydrogen molecule, and the hydrogen molecule is formed without electrons emitted by the cathode, i.e. without direct expenses of electric power for this process. In this case, electric power is spent only for the separation of the hydrogen molecule being formed from two water molecules. Energy consumption for production of one cubic meter of hydrogen is as follows:

$$2\cdot1.48\cdot44.64\cdot1.602\cdot10^{-19}\cdot6.023\cdot10^{23}=1274944kJ=3.54kWh \qquad (276)$$

One cubic metre of hydrogen weighs 90 g. Energy content of one gram of hydrogen is equal to 142 kJ. When this hydrogen is burnt, energy of 90×142=12780 kJ will be released. Total index K_0 of energy efficacy of the process will be as follows:

$$K_0=(6364+12780)/14400=1.33. \qquad (277)$$

If hydrogen were released as a result of fusion of its molecules, energy would be generated [109]:

$$H+H\rightarrow H_2+(436\cdot44.64)=19463.0kJ/m^3. \qquad (278)$$

Now let us consider how a parahydrogen molecule is formed (Fig. 53, c). Electron e_k emitted by the cathode (Fig. 80) combines two molecules of water. There is a hydrogen molecule structure in the chain being formed. It is formed by the proton of the hydrogen atom of one water molecule, the electron e_k emitted by the cathode and the proton with its electron (the hydrogen atom) of the second water molecule. Thus, one electron emitted by the cathode is spent for the formation of one parahydrogen molecule.

As only one electron is spent for formation of the parahydrogen molecule shown in Fig. 80, according to Faraday's law energy expenses for such process should be half. The calculation according to our method gives an actual result (276).

If the hydrogen molecules are formed according to the diagrams shown in Fig. 78, 79 and 80, there are no hydrogen atom protons and hydrogen atoms in free state in the solution. There are no processes of fusion of the atoms and the hydrogen atoms, there is no additional energy, which corresponds to these processes. An index K_T of energy efficacy of such processes of water electrolysis will be less than one.

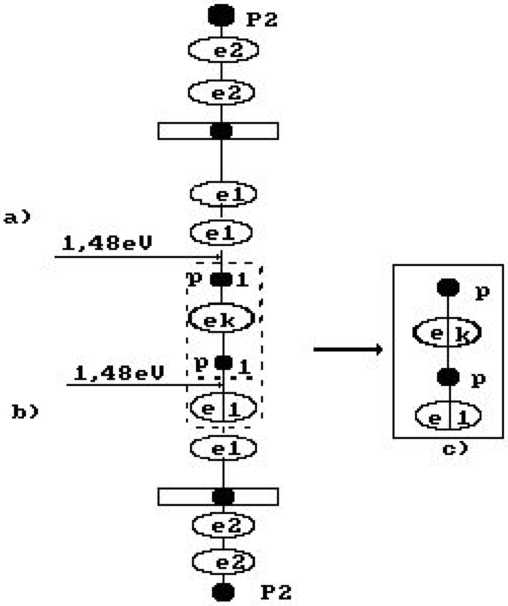

Fig. 80. Diagram of parahydrogen molecule formation (s. Fig. 53, c): and b) water molecules; c) parahydrogen molecule

Let's consider the reactions, which take place near the anode. It is known that hydroxyl ion (Fig. 75) having the negative charge OH^- moves to the anode (Fig. 81, a). Two hydroxyl ions give one electron each to the anode, connect with each other and form hydrogen peroxide H_2O_2 (Fig. 81, b).

It is known that the process of formation of hydrogen peroxide is an endothermic one, and the process of formation of oxygen molecule is an exothermic one. When one cubic metre of hydrogen is produced, the process of formation of hydrogen peroxide requires 22.32 x 109.00= 2432.88 kJ. Due to it, even during plasma-electrolytic process the temperature of the solution in the anode area remains low.

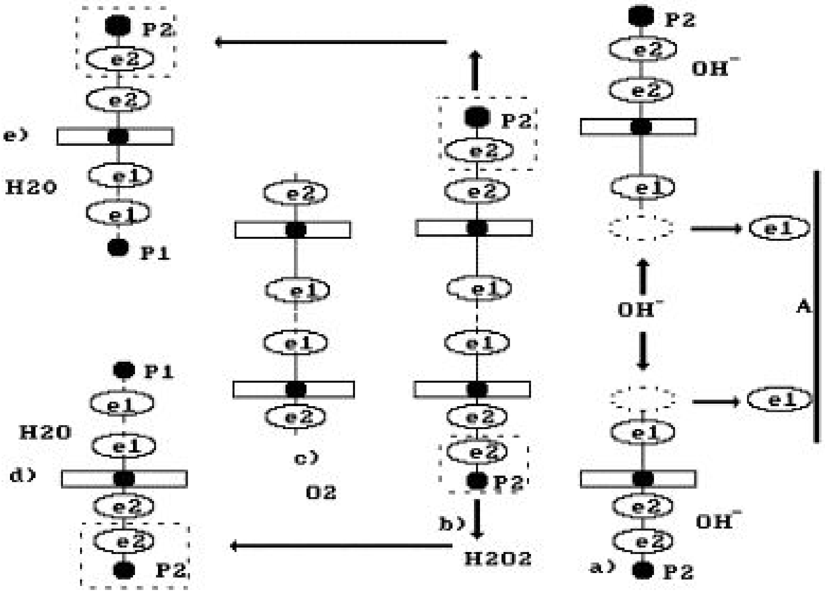

Fig. 81. Diagrams: a) transfer of electrons e1 by the ions OH^- to the anode A; b) formation of hydrogen peroxide H_2O_2; c) formation of oxygen molecule O_2 and two molecules of water d) and e)

If the oxygen molecule fusion process existed, 22.32 x 495.00=11048.40 kJ would be released during production of one cubic metre of hydrogen in the anode area. If we subtract energy absorbed during hydrogen peroxide fusion from this value, we'll get 11048.40-2432.88=8615.52 kJ. ***If we add this energy to hydrogen molecule fusion energy of 19463.00 kJ, we'll get 28078.52 kJ. In this case total index of energy efficacy should be as follows: 28078.52/14400=1.95.*** As this energy does not exist in reality, this fact confirms a hypothesis concerning the lack of the hydrogen molecule fusion process in the cathode area and the oxygen molecules in the anode area. The hydrogen molecule (Figs 78, 79 and 80) and the oxygen molecule (Fig. 81, b) are formed prior to a release into the free state, that's why energy of their fusion is not generated.

When two electrons are transferred to the anode by two ions of hydroxyl (Fig. 81, a), a hydrogen peroxide molecule is formed (Fig. 81, b), which decomposes and forms an oxygen molecule (Fig. 81, c) and two hydrogen atoms; they are combined with the hydroxyl ions and form two water molecules (Fig. 81 d, e) If we take it into account, the chemical reaction in the anode area will be written in such a way:

$$4OH^- - 2e \rightarrow H_2O_2 + 2OH^- \rightarrow O_2 + 2H_2O. \qquad (280)$$

Thus, we have removed the contradictions of the existing theory of low-voltage process of water electrolysis and have worked out a new theory, which describes this process in detail and reflects reality more accurately.

Power of Chemical Bonds of Water Molecules

Let's consider energy content of chemical bonds of the atoms and the ions being shaped during water formation. Let's assume that we have managed to begin the formation of water molecules if free protons, electrons and oxygen atoms are available. Let's calculate quantity of energy released during the fusion of one litre of water.

There are the notions of gram-atom and gram molecule in chemistry. Gram-atom is equal numerically to atomic mass of the substance; gram molecule is equal numerically to molecular mass of the substance. For example, hydrogen gram molecule in water molecule H_2O is equal to 2 grams, and gram-atom of oxygen atom is equal to 16 grams. Gram-molecule of water is equal to 18 grams. Thus, one litre of water contains 1000/18=55.56 gram molecules of water.

As the mass of hydrogen H_2 in water molecule H_2O is 2 x100/18=11.1% and the mass of oxygen atom O is 16x100/18=88.9%, the ratio between quantity of hydrogen and oxygen is preserved in one litre of water as well. It means that 1000 grams of one litre of water contain 111 grams of hydrogen molecules and 889 grams of oxygen atoms O.

One litre of molecular hydrogen H_2 has mass of 0.09 grams; one litre of molecular oxygen O_2 has mass of 1.43 grams. It means that from one litre of water it possible to produce

111/0.09=1222.2 litres or 1222.2/22.4=54.56 moles of molecular hydrogen H_2 and 889/1.43=621.67 litres or 621.67/22.4=27.75 moles of molecular oxygen O_2.

Let's pay attention to the fact that mass of hydrogen atom H is half mass of hydrogen molecule H_2. As molecular volume of all gases is similar and is equal to 22.4 litres, it means that one litre of water contains 111/0.045=2444.4 l or 2444.4/22.4=109.12 moles of atomic hydrogen [109].

Hydrogen atom fusion is the process of junction of free proton with free electron. Energy of the photons emitted by the electron depends on energy level, on which the electron is held. If it is held on the first, non-exited energy level, prior to it the electron emits a set of the photons with energy of 13.6 eV, which is equal to the energy of hydrogen atom ionization. If the electron is held on the second level, energy of a set of the emitted photons is 3.4 eV; if it is held on the third level, energy is equal to 1.5 litres eV; if it is held on the fourth level , energy is equal to 0.85 eV, etc. (s. Table 29).

The analysis shows that the electron of hydrogen atom can be on the first non-exited energy level only in the case if there are no external existing factors in the form of variables of the electric fields. If external disturbance is constantly present, the electron in the atom begins to move from one energy level to another energy level. In this case energy of the emitted photons and the absorbed ones will correspond to inter-level transitions of the electron [109].

Now let us consider the fusion process of water molecule fusion. It begins from the formation of hydrogen atom. When the electron is bound with the proton, it will try to occupy non-exited energy level and will emit the photons with total energy of 13.6 eV, equal to ionization energy of hydrogen atom. If we convert this energy into kilojoules (kJ), we shall have [109]

$$13.6 \cdot 1.602 \cdot 10^{-19} = 21.787 \cdot 10^{-19}\, kJ. \qquad (281)$$

When one mole of atomic hydrogen is formed, energy is released

$$21.787 \cdot 10^{-19} \cdot 6.023 \cdot 10^{23} = 1312\, kJ. \qquad (282)$$

At the temperature below 4500÷5000°C hydrogen atoms unite in molecules. As chemists think, energy released during this process is equal to 436 kJ per mole. When hydrogen molecule unites with oxygen atom, water molecule is formed with the release of energy of 285.8 kJ per mole. If one treats the above-mentioned values of energy being released consequently during the fusion of hydrogen atom, hydrogen molecules and water molecules, the following quantity of energy will be released [109]

$$H^{+} + e^{-} \rightarrow H + 1312 \cdot 109.12 = 143165.44\, kJ/l, \qquad (283)$$

$$H + H \rightarrow H_2 + 436 \cdot 54.56 = 23788.16\, kJ/l, \qquad (284)$$

$$H_2 + 0.5O_2 \rightarrow H_2O + 285.8 \cdot 55.56 = 15879.09 kJ/l \qquad (285)$$

If we sum up the results being obtained, we'll have 182832.69 kJ per litre. It is potential energy, which can be released during the above-mentioned consequent fusion of one litre of water. If we take into account the fact that energy content of one litre of gasoline is 30000 kJ, it is 6 times less than the energy released during the formation of chemical bonds of one litre of water molecules beginning from the formation of atomic hydrogen [109].

Hydrogen mass obtained from one litre of water is equal to 1222.2x0.09=109.998 g. Energy content of one gram of molecular hydrogen is equal to 142 kJ, and energy content of hydrogen produced from one litre of water is 142x109.998=15619.72 kJ. It is half of energy content of one litre of gasoline.

If hydrogen atoms were united in molecules being on the first energy levels, 182832.69 kJ per l of energy would be released during the fusion of one litre of water. But everything points out to the fact that hydrogen atoms unite in molecules only in exited state when their electrons occupy higher energy levels. A light zone to the right of a bright band on the spectrogram proves it (Fig. 82) [109].

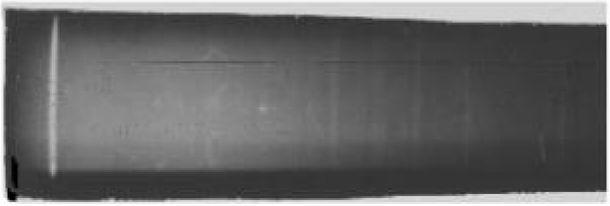

Fig. 82. Spectral line (light line to the left) of the second energy level of hydrogen level with the light continuos zone (to the right from the line) being photographed by E.D. Zykov from plasma of the plasma-electrolytic reactor.

The bright band itself corresponds to energy of the photons emitted by the electrons during the transit from the third energy levels to the second energy levels, and the light zone to the right of this band corresponds to the spectrum of molecular hydrogen and demonstrates that the electrons of hydrogen atoms occupy higher energy levels before the formation of its molecule. As prior to the unification in molecules hydrogen atoms are in exited state, the energy of this state should be taken into account during the fusion of the atoms and later on of hydrogen molecules and water molecules. But we do not know a number of energy level of the electron in hydrogen atom yet, at which it unites with the neighbouring atom and forms hydrogen molecule.

One spectral line of hydrogen atom, which corresponds to the transition of the electron from the third energy level to the second one, is shown in the spectrogram (Fig. 82, to the left). Energy of the photon emitted by the electron during this transition is equal to E_{ph} =(12.0.87-10.198)=1.89 eV. The bright zone to the right from the band is the molecular spectrum of hydrogen [109].

We should note that the electrons of the atoms and the ions form on the spectrogram the distinctive bands, which correspond to the fixed energy levels. The molecules form the so called striped spectra, which are often merged into continuous light zones [61], [62]. These are unfixed energy levels. Energies corresponding to fixed energy levels of the atoms and the ions are determined with great accuracy. Energy of unfixed energy levels formed by the electrons of the atoms connected in molecules is changed in definite ranges. In some cases it is possible to determine an average value of energy corresponding to some ranges. For example, chemists have determined that 436 kJ are released during the fusion of one mole of hydrogen molecules. Let's try to determine, at which energy levels the electrons in hydrogen atoms are arranged before they are united in a molecule. Let's calculate the energy corresponding to chemical bonds in hydrogen molecule [109]

$$\frac{436\cdot 1000}{6.02\cdot 10^{23}\cdot 1.6\cdot 10^{-19}}=4.53eV$$

As calculated per atom, it is equal to 4.53/2=2.26 eV. It is binding energy between the atoms in hydrogen molecule. It is not difficult to calculate [53] that 2.55 eV of energy are released during the transit of the electron of hydrogen atom from the fourth energy level to the second one. If one takes into account that the spectrum of hydrogen molecule (the light zone to the right from the bright band in Fig. 82) is formed in the zone before the second energy level, i.e. in the zone with energy, which is a bit less than energy of 2.55 eV, there is every reason to consider that prior hydrogen molecule formation the electrons of its atoms are on the fourth fixed energy levels. Binding energy of the electron with the protons is equal to 0.85 eV (Table 29).

Now let us give a variant of the calculation of energy, which is released during the fusion of one litre of water being the nearest one to reality. It corresponds to the case when the electrons of hydrogen atoms being born are kept at the fourth energy levels and then they are united into molecules. In this case during the formation of one hydrogen atom energy of (13.598-12.748)=0.85 eV is released, or in the calculation per mole [109]

$$(0.85\cdot 1.602\cdot 10^{-19}\cdot 6.02\cdot 10^{23})=82.0kJ/mol \qquad (286)$$

Then the equation (286) gives this quantity of energy (82.0 x 109.12)=8947.84 kJ per litre, and the total quantity of energy is (8947.84+23788.16+15879.09)=48615.1 kJ per litre during the fusion of one litre of water. It is more than burning of one litre of gasoline (30000 kJ) or hydrogen (15879.09 kJ) obtained from one litre of water.

Thus, the variant of the fusion of hydrogen molecules is the most probable at the moment when the electrons of hydrogen atoms are on the fourth energy levels. In this case during the fusion of 1 litre of water energy is released, which is (48615.1/30000=1.62) 1.62 times greater than energy produced during burning of one litre of gasoline and is (48615.1/15895.15=3.0) 3.0 times greater than energy produced during burning of hydrogen produced from one litre of water.

Thus, in order to produce additional energy it is necessary to synthesize at first hydrogen atoms, then the molecules. The processes of their fusion are the main sources of additional energy.

In an ideal case in order to check these calculations it is necessary to take free protons, to connect them with free electrons and to obtain atomic hydrogen and then molecular hydrogen. Then it is necessary to unite molecular hydrogen with atomic oxygen and to produce water. When energy released during the fusion process of hydrogen atoms, its molecules and water molecules is measures, it is possible to determine, which calculation method reflects reality more exactly. But it is difficult to carry out such ideal process. It is easier to find an economical way of water molecule distraction and to obtain additional energy with the help of its fusion in the above-mentioned sequence.

Now we see that additional energy is generated by the electrons. Where do they take it from? When we have considered the model of the electron, we have found out that it can exist in free state only in case when its electromagnetic mass is strictly determined.

When it is combined with the atomic nucleus, it emits a part of energy in the form of the photons, and its electromagnetic mass is reduced. But stability of its state does not become worse, because energy taken by the photon is compensated by binding energy of the electron with the atomic nucleus. When it is separated from the atom and becomes free, it should restore its mass, which corresponds to its free state, in order to maintain its stability. Where does the electron take it from? The source is the only one - the physical environment in the form of ether. From this environment, it restores the energy (mass) being lost in the form of emitted photon. When the electron restores the constants (mass, energy, charge), it acquires stable free state.

When the conditions for the electron's entry into bond are formed, it begins to emit energy in the form of the photons at once, which corresponds to binding energy. In a new stage of free state, it restores its constants (mass, charge, energy) again absorbing ether from the environment. Thus, the electron transforms energy of the environment into energy of the photons [109].

We have already published this hypothesis in one of our articles printed in USA [72]. It is published in Russian for the first time. A question arises: is free space available in the atom, which can serve as a source of ether absorbed by the electron in the process of restoration of its constants? The answer can be got from the geometrical parameters of the atom, and they are as follows: if the size of the atomic nucleus were equal to one mm, the size of one electron in the atom would be nearly one metre, and the size of the atoms itself would be nearly 100 metres. It means that the atoms has enough space filled with ether, which is necessary for the electron for the restoration of its constants after the bond with an atomic nucleus or with the electron of the neighbouring atom is lost.

It means that physical vacuum is a source of additional energy and the electron is a converter of energy of vacuum into energy of the photon [84].

The given results of calculations and experiments demonstrate the possibility of production of additional energy during water electrolysis, but for this purpose it is necessary to create the conditions for the implementation of this possibility.

The preliminary analysis of manifestation of additional energy in the phenomena of water cavitations shows that the source here is the same as during water electrolysis. Mechanical destruction of water molecules leads to the further fusion of the atoms and the molecules of hydrogen and water. The electrons play here the same role as during water electrolysis. They transform energy of vacuum into energy of the photons.

Clusters and their Binding Energies

It is known that water molecules can be units with each other forming the associations called clusters. The clusters are a set of the molecules of the same name, which are connected with each other by hydrogen bonds, as it has been considered earlier. And it is so indeed. Water molecules connect the protons of the hydrogen atom into clusters (Fig. 83).

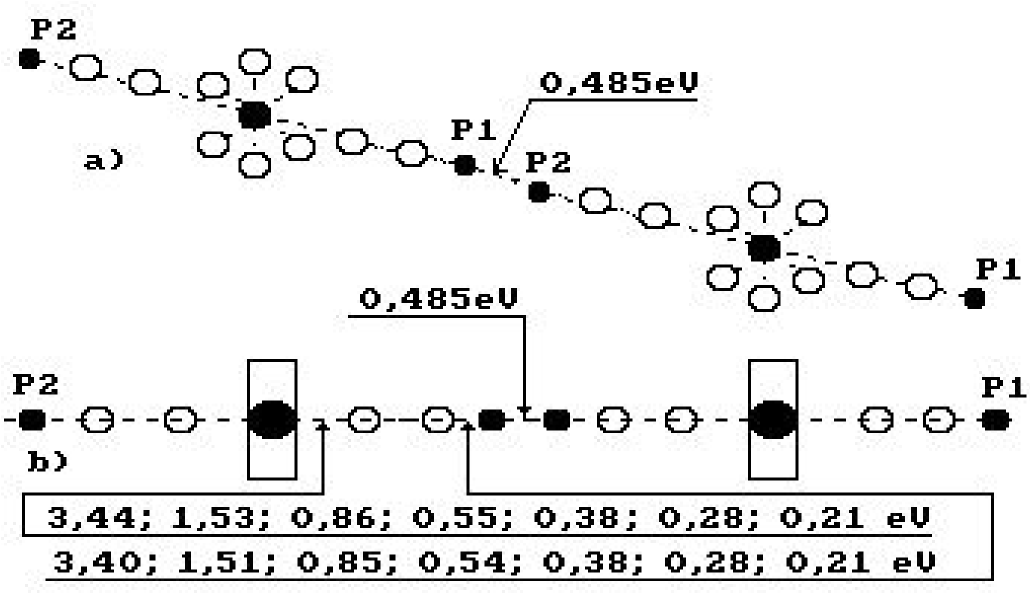

Fig. 83. Diagram of a cluster made of two water molecules

Now we can call them electron bonds, proton bonds or electron - proton bonds. The chemical formula of the cluster consisting from n of ions of H_3O^+ and water molecules is put down in the following way [48]

$$H_3O^+(H_2O)_{n-1} + H_2O \rightarrow H_3O^+(H_2O)_n. \qquad (287)$$

If ion OH^- participates, the reaction takes place in such a way

$$OH^-(H_2O)_{n-1} + H_2O \rightarrow OH^-(H_2O)_n. \qquad (288)$$

There are experimental data of binding energies between water molecules and ions H_3O^+ and OH^- when their different quantity is present in a cluster (Table 37) [48].

Table 37. Values of binding energy in clusters, eV

Value n	0-1	1-2	2-3	3-4	4-5	5-6	6-7
$H_3O^+(H_2O)_n$	1.56	0.97	0.74	0.67	0.57	0.51	0.45
$OH^-(H_2O)_n$	1.1	0.71	0.66	0.62	0.61	-	-

For example, 5.47 eV are consumed for the formation of cluster $H_3O^+(H_2O)_7$ when n=7.

The process of the formation of clusters is an endothermic one, i.e. during the formation of the clusters the electrons, which unite the molecules with each other, move off from the atomic nuclei in their cells.

Having the structure of water molecule (Fig. 72-74) we see other possibilities of cluster formation. There are no restrictions for the formation of proton-to-proton bonds between water molecules. The protons of the first hydrogen atoms in two water molecules uniting with each other form the association of two molecules (Fig. 83). The protons of the second hydrogen atoms in water molecules as well as the first and, probably, the second electrons of oxygen atoms can be involved in this process. As a result, the number of molecules in the cluster will be increased.

Thus the presence of the ions of hydroxyl and hydroxonium is unnecessary for the formation of the clusters of water. Let's consider the structure of parahydrogen molecule in Figs 53,b and 80,c. It can be a connecting link in the cluster, and after its destruction hydrogen can be born at once not in the atomic state, but in the molecular one.

If under usual conditions water molecules are united in the associations known as clusters, binding energy between clusters moves to zero during the conversion into vaporous state, and we have the possibility to calculate binding energy between the molecules in the cluster at the temperature of 20ºC. We'll use vapor formation energy of 2595.2 kJ per kg for this purpose. Let's convert this energy into electron – volts in the calculation per molecule (Fig. 83).

$$E_b = \frac{2595.2 \cdot 1000}{6.02 \cdot 10^{23} \cdot 1.6 \cdot 10^{-19} \cdot 55.56} = 0.485 eV. \qquad (289)$$

This result is close to binding energy (0.54 eV) of the electron of the first hydrogen atom in water molecule when it is on the fifth energy level (Table 35) and proves that the proton of this atom spends the majority of magnetic line of force for the bond with the electron, and the minority is free and can be used for the bond with the proton of hydrogen atom of the neighbouring water molecule (Fig. 83). One more problem takes place here, about which we'd like to say some words.

What law controls the alternation of the magnetic poles of the protons in atomic nuclei? The reader understands that the answer to this question can be given by a new book, and not only by one book, that's why we give a short answer, which seems to be obvious. It is impossible that the south or north magnetic poles of all protons of the nucleus are directed to its surface or to the centre. They alternate in such a way that strength of the nucleus is increased. They are in sequence, and strength of the nucleus is increased. It can be easily seen that the axial neutrons and protons in the nucleus of the oxygen atom (Fig. 28) are connected by unlike magnetic poles at different ends of the nuclei axis and leave different magnetic poles.

It leads automatically to various magnetic polarities of the protons of hydrogen atoms in water molecules, and in this case the conditions are formed for proton-to-proton bond between water molecules and for the formation of clusters in such a way.

There is every reason to believe that one and the same proton in various nuclei of atoms can be arranged in such a way that the north magnetic pole in one nucleus will be directed to the centre of the nucleus and in other nucleus to its surface. Such arrangement of the magnetic field of the proton provides the formation of proton-to-proton bond between water molecules during the formation of clusters.

The atomic nuclei are the beginning of the formation of various magnetic poles of valence electrons on the surface of the atoms, that's why there is every reason to believe that all atoms are divided into two classes according to this feature, these classes can be conditionally called "masculine" and "feminine."

If we imagine a cluster consisting of two water molecules, which have the forms of the balls with the diameters of 100 metres, the protons arranged on the surface of these balls and uniting them in a cluster have millimetre dimensions. The smallest, even mechanical influence will destroy this system creating the conditions for fluidity of water molecules.

If the clusters had been formed by electron-to-electron bonds, they would have had metre dimensions of the surface of one hundred metre molecules.

Now it is possible to calculate energy spent for heating of one water molecule by one degree. It is known that 335.2 kJ of energy is spent for heating of one litre of water from 20ºC to 100ºC. Calculating per molecule it will be

$$E_{б} = \frac{335.2 \cdot 1000}{6.02 \cdot 10^{23} \cdot 1.6 \cdot 10^{-19} \cdot 55.56} = 0.063 eV \qquad (290)$$

It is energy value, by which binding energy of valence electrons is changed in water molecule if it is heated from 20°C to 100°C. If we divide 0.063 eV by 80, we'll get a value, by which binding energy of valence electrons is changed during water heating by one degree. It is equal 0.00078 eV. This energy corresponds to the photons of a relic range, which covers a part of the infrared range and the microwave one (Table 34).

Thus, minimal energy of the photons absorbed by the electrons of water molecules during heating corresponds to the energies of the photons of the relic range; it serves as an indirect proof that this ranges a boundary of existence of single photons [109].

Now it is possible to specify energy level number, at which the electrons of hydrogen atoms are in water molecules. For this purpose let us convert energy (286 kJ) of fusion of one mole of water in electron-volts.

$$E = \frac{286 \cdot 1000}{6.02 \cdot 10^{23} \cdot 1.6 \cdot 10^{-19}} = 2.97eV \qquad (291)$$

It will be 2.97/2=1.485 eV in calculation to one bond. It is near to energy of 1.51 eV of the third atomic energy level. Later using energy consumption (4 kWh) for the production of one cubic metre of hydrogen we have found out that binding energy of hydrogen atom with oxygen atom in water molecule is equal to 1.59 eV. Energy consumption for heating of water during its electrolysis is included into this value. If water is heated up to 80°C, binding energy is equal to (1.59-0.00078x60)=1.543 eV at 20°C. Good approximation of two results to energy (1.51 eV) of the third atomic energy level of hydrogen atom points out to the fact that we can trust the fusion energy values of one mole of molecular hydrogen of 436 kJ per mole and fusion energy of one mole of water molecule of 286 kJ per mole. The results being obtained show that the electron of hydrogen atom in water molecule is not on the third atomic energy level exactly (1.51 eV), but near it.

One cubic metre contains 1000 x 0.09=90 g of hydrogen. Energy content of one cubic metre of hydrogen is 142 x 90=12780 kJ. Produced energy of 12780 kJ is equal to (12780/3600)=3.55 kWh. If one can manage to spend less energy consumption for the production of one cubic metre of hydrogen than 3.55 kJ, it will be a competitive energy carrier [109].

The analysis of the model of the electron (Fig. 18) shows the possibility of the formation of the clusters of the electrons. The unlike magnetic fields of the electrons bring them together, and the like electric fields restrict this approach. Accuracy of this consequence is confirmed by the experiments [185], [186], [188].

PLASMA–ELECTROLYSIS OF WATER

Plasma-Electrolytic Process

Electrolytic processes have been known for a long time, and they are widely used in the chemical industry. Plasma–electrolytic processes have been found quite recently, and that's why there is neither physical, no chemical theory of these processes. The preliminary analysis shows that a complete description of plasma-electrolytic process can be based neither on purely physical notions, nor purely chemical ones. These are interconnected physical and chemical processes, that's why it is possible to subdivide them into physical processes and chemical ones only conditionally.

Photo: One of the reactors used by Kanarev for testing:

A plasma-electrolytic reactor is a device, which is made of dielectric material (Figures 85-88). The working solution is fed into the space between the electrodes. If voltage is increased it results in the change of strength of current in a chain, which characteristic appropriateness is shown in Fig.84.

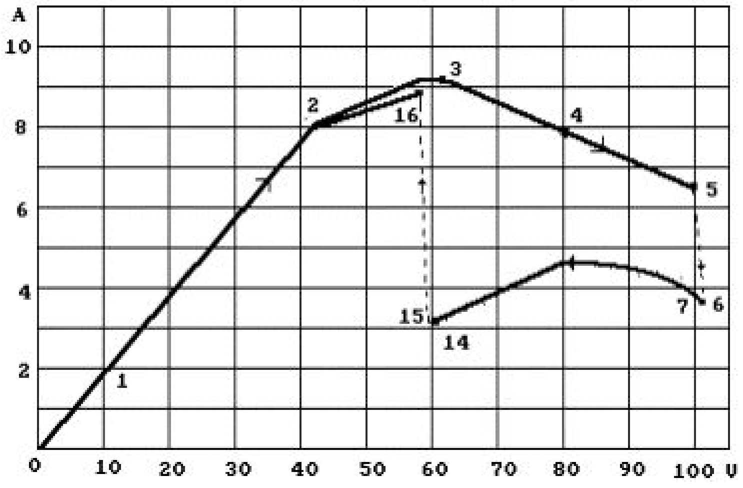

Fig. 84. Volt - ampere characteristic, which corresponds to Table 38

Table 38. Test results of reactor № 1 when 8.74 litres per hour of 1-normal solution HCl is consumed. Its temperature at the input being 23.0ºC

Rated points	Voltage, V	Current, A	Input Energy, kJ	Temperature of the solution, C	Output Energy, kJ	Index efficiency,%
1	2	3	4	5	7	9
1	10	1.7	61.2	24	36.6	59.8
2	40	8.2	1180.8	49	952.1	80.6
3	58.5	9.15	1927.0	73	1831.0	95.0
4	80	7.85	2260.8	82	2160.6	95.6
5	100	6.65	2394.0	83.5	2215.5	93.0
6	102	3.75	1377.0	81	2121.1	154.0
7	85	4.7	1438.2	69	1684.5	117.1
8	76	4.3	1176.5	65	1538.0	130.7
9	68.5	3.75	924.7	55	1171.8	126.7
10	88	4.5	1425.6	71	1757.8	123.3
11	92	4.2	1391.0	71	1757.8	126.4
12	94	4.4	1489.0	71.5	1776.1	119.3
13	98	4.2	1481.8	71	1757.8	118.6
14	68	3.9	954.7	56	1208.5	126.6
15	64	3.3	760.3	50	988.7	130.0
16	61	3.05	669.8	46	842.3	126.0
17	57.5	9.3	1925.1	72	1794.4	93.2

Strength of current is increased when voltage is increased linearly according to Ohm’s law. If voltage exceeds 40 V, Ohm’s law is violated; if voltage is about 100 V (points 5-6), strength of current is increased spasmodically, and a bright glow (plasma) appears near the cathode. Further compulsory reduction of voltage (points 6-15) changes strength of current insignificantly. When voltage is about 60 V (points 14-15), the cathode glow disappears, and the strength of current is increased spasmodically almost up to the former value [71], [81], [109], [189].

Note: energies of released hydrogen and oxygen as well as emitted light have not been taken into account.

As hydrochloric acid has taken part in the process, we’ll need binding energies of valence electron of chlorine atom during the analysis. Ionization potential of the first electron of chlorine atom is E_i = 12.967 eV, and its binding energy with the atom corresponding to the first energy level is E_1 = 15.548 eV

Table 39. Spectrum of the 1th electron of chlorine atom and its binding energy E_b with the nucleus:

Quantum number	n	2	3	4	5	6
E_{ph} (exper.)	eV	9.08	11.25	12.02	12.34	12.53
E_{ph} (theor.)	eV	9.08	11.24	11.99	12.34	12.54
E_b (theor.)	eV	3.28	1.46	0.82	0.52	0.36

Physical Model of Plasma-Electrolytic Process

In order to find out the physical model of the process, it is desirable to observe how it takes place. For this purpose a special reactor was manufactured, with its cathode chamber made in the form of a hole in flat acrylic plastic with the thickness of 24 mm. The needle cathode made of tungsten was introduced in the hole from above, and working solution was fed from beneath and arrived from a side hole. Transparency of acrylic plastic allows watching some details of the plasma-electrolytic process in various modes of the reactor operation. Prior to describe the observation results, let us characterize the main «participants» of the plasma-electrolytic process: the electrons, the protons, the atoms, the ions and water molecules.

Earlier we have shown that the electron radius is its main geometrical parameter. It is equal to Compton wave-length $r_e = \lambda_e = 2.426\cdot 10^{-12} m$ λ_e (172), and it is changed insignificantly during energy transitions of the electron in the atom. We have found out that the proton radius is equal to $r_p = 1.3\cdot 10^{-15} m$ (230). It is by three orders of magnitude less that the electron radius [109].

Hydrogen atom is the next «participant» of the process. Its size is variable. It is increased with the temperature increase of the environment, which surrounds the atom. When the electron in the atom is on the first energy level, the distance between the proton (atomic nucleus) and the electron is equal to $1.058 10^{10} m$ (240), i.e. it is equal approximately to one Angstrom. The size of hydrogen atom in non-exited state is by five orders of magnitude greater than the proton and by two orders of magnitude greater than the size of the electron. When the electron goes to the third energy level, the distance between it and the proton in hydrogen atom is increased and becomes equal to 9.54×10^{-10} (244).

We have found out that the sizes of all atoms in non-exited state are near to the size of hydrogen atom. Consequently, the size of oxygen is near to one Angstrom. The sizes of the ions (we do not consider the proton as the ion) and the molecules are several times greater than the sizes of the atoms and depend of the numbers of energy levels, on which valence electrons uniting the atoms into the molecules are situated.

Let's consider the structure of water molecules (Figs 72-74) and binding energies of the electrons with the nuclei of the atoms of hydrogen, oxygen and chlorine (Table 35, 36, 39). It means that a separation of the hydrogen atom and one proton from water molecule and from the molecule of hydrochloric acid (HCl) are the phenomena of equal probability, because they have similar binding energies on energy levels of the same name.

If we analyse the data of Fig. 84 and Table 38, we can form the following physical model of plasma-electrolytic process. When voltage is increased up to 60 V, well known ion conductivity operates in the solution. At such potential water molecules contacting with the cathode by positively charged protons of hydrogen atoms dissociate into molecular hydrogen H_2 and hydroxyl ions OH^- (Fig. 75). In this case a usual process of water electrolysis takes place [109].

When voltage is increased, hydrogen atoms and their protons begin to be separated from water molecules. At first separate streamers (sparks) appear in the solution near the cathode. It points out to the fact that the protons of hydrogen atoms are separated from water molecules and during their movement to the cathode are united again with the electrons producing new atoms of hydrogen. Further increase of voltage increases quantity of the protons, which have been separated from water molecules, and plasma of hydrogen atoms is formed near the cathode (points 5, 6). The electrons of hydrogen atoms are in an exited state at this moment and move from high energy levels to low energy levels generating the light of Balmer[47] spectral lines. One can judge by intensity of these lines, between which energy levels of hydrogen atoms the largest quantity of electron moves.

Visual analysis of the whole spectrogram (only a part in shown in Fig. 81) demonstrates that the largest quantity of electrons in hydrogen atoms moves from the third to the second energy level (the light bright band to the left of Fig. 82). The light zone near this band to the right confirms the simultaneous formation of hydrogen molecules [60], [61], [62].

As voltage is reduced (points 7-14) the volume of plasma is reduced, energy levels of the electrons of hydrogen atoms, on which they stop, move off from the protons, energy of emitted photons is reduced, wave-length is increased, and colour of plasma is charged from bright white to red. Then the moment takes place (point 15) when the potential on the electrons is not enough for the separation of the protons from water molecules, and the process goes out slowly returning the system into the initial state of ion conductivity (Fig. 84).

If we analyse Table 38 and Fig. 84, we see that the data on the mode corresponding to point 6 are of the greatest interest. This mode has been formed spontaneously. Stable plasma is absent in point 5, only glimmer can be observed near the cathode. Then in a certain period of time current is reduced spontaneously, and stable plasma appears at once.

---

[47] See 'Rydberg Formula' in the Glossary.

Plasma being formed limits the contact of the solution with the surface of the cathode (it increases resistance in cathode-solution circuit). As a result, the value of current is reduced sharply and remains such till energy of plasma and applied voltage is enough for the separation of the protons from water molecules.

Hydrogen atoms unite into molecules on «plasma - solution» boundary. Their further fate depends on availability of oxygen atoms. If they exist, water molecules are formed with the characteristic micro - explosions, which generate noise in some modes of the reactor operation. If there are no oxygen atoms near the cathode or they have been united into oxygen molecules, hydrogen molecules are mixed with oxygen molecules and form the so-called "blasting mixture", which is removed from the cathode together with water vapors.

If voltage is increased after appearance of plasma (Fig. 84, point 6), plasma temperature is increased, and the spike of tungsten cathode becomes bright white at first, then it starts burning. It is easy to observe this process through transparent acrylic plastic of the reactor. The larger voltage, the more intensive is burning (melting) of the cathode. It is known that melting point of tungsten is 3382ºC, and its boiling point is 6000ºC.

Thus, atomic hydrogen is a source of plasma in plasma-electrolytic process. Alternating electric field keeps hydrogen atom in an exited state forming its plasma with the temperature of 5,000÷10,000ºC. Intensity of this plasma will depend on applied voltage and on the consumption of the solution, which flows about the cathode. The greater applied voltage and the greater the consumption of the solution, the more intensive plasma is.

Chemical Model of Plasma-electrolytic Process

Starting to consider a chemical model of the plasma-electrolytic process we have to point out that modern chemistry does not know an abundance of energy levels of each electron and an abundance of binding energies between the atoms in the molecules. We do not know how the values of binding energies of hydrogen atoms with oxygen atoms in water molecule have been obtained before our investigations (with the help of the calculations or experiments), but we have shown that these energies do not correspond the energies of dissociation of water molecules during its low voltage electrolysis, i.e. they do not correspond to energy consumption during water decomposition into hydrogen and oxygen. We are faced with the problem: what to do next? Shall we trust these and other calculation results of modern chemistry or shall we cast doubt on them?

As atomic hydrogen exists at the temperature of 5,000÷10,000°C, [52], plasma with such temperature is formed in the cathode zone. Plasma will exist only under the condition of sufficient density of hydrogen atoms in the given volume. In order to fulfil this condition it is necessary to increase density of current on the cathode. After the formation of hydrogen atoms or their separation from water molecules they would remain in non-exited state if there were no external influence. But during the operation of the plasma-electrolytic reactor hydrogen atoms are at continuous influence of alternating electric field, which makes hydrogen atoms be in exited sate, it is proved by availability of a complete set of Balmer spectral lines on a spectrogram.

Unfortunately, we have no complete spectrum of hydrogen atom and know nothing about availability of Lyman[48] spectral lines, Paschen[49] spectral lines, etc., it makes the analysis of the phenomenon being studied difficult [109].

The following chemical reactions will take place in the "plasma–solution" interphase boundary at the same time:

$$2H_2O + 2e^- \Rightarrow H + H + 2OH^- \Rightarrow H_2 + 2OH^- + 436kJ/mol \qquad (292)$$

and

$$2H_2O \Rightarrow 2OH^- + H^+ + H^+ + 2e^- \Rightarrow H + H + 2OH^- + 2\cdot 82{,}8kJ \Rightarrow$$
$$\Rightarrow H_2 + 2OH^- + 165{,}6\text{кДжс} + 436{,}0kJ \Rightarrow H_2 + 2OH^- + 601{,}6kJ/mol. \qquad (293)$$

If a molecule of oxygen O_2 is formed near the anode, energy is released

$$4OH^- \rightarrow 2H_2O + O_2 + 4e^- + 485kJ/mol. \qquad (294)$$

In the model of the reactor, which trial results are given in Table 40, hydrogen and oxygen escape via the same branch pipe, that's why endothermic reactions are possible in it [2]

1- formation of hydrogen peroxide H_2O_2

$$H_2O + O \rightarrow H_2O_2 - 109kJ/mol; \qquad (295)$$

2 - formation of ozone O_3

$$3O_2 \rightarrow 2O_3 - 284kJ/mol; \qquad (296)$$

3- formation of the ion of hydroxonium H_3O^+

$$H_2O + H^+ \rightarrow H_3O^+ - 320kJ/mol. \qquad (297)$$

---

[48] See 'Rydberg Formula' in the Glossary.

[49] See 'Rydberg Formula' in the Glossary.

Unfortunately, we do not know intensity of both exothermic (292, 293, 294) and endothermic (295, 296, 297) reactions. Solution temperature change regularity (Table 38) points out to the fact that intensity of endothermic reactions in the zone of existence of molecular hydrogen (points 3, 4, 5) is lower than in points 7-15 where plasma of atomic hydrogen is preserved, and solution temperature is reduced. The reduction of water temperature during voltage decrease in the experiment (Table 38, points 6-15) is explained by intensive absorption of heat during the formation of hydrogen peroxide H_2O_2, ozone O_3 and ion H_3O^+.

Japanese researchers Ohmori and Mizuno[50] found dissemination of nickel, chromium and carbon on the cathode of the plasma-electrolytic reactor [51]. They consider that cold nuclear fusion is a source of these chemical elements. Later on we'll analyze this phenomenon in detail.

Diagrams of Models of Plasma-electrolytic Reactors

Our theoretical investigations have been accompanied by the publication and patenting the results being obtained. It is known that a patent for a mode and device is the most valuable one, that's why a claim for such a patent was made one of the first claims. Five years later the Patent № 2167958 for the mode and the device for production of thermal energy, hydrogen and oxygen was obtained (Fig. 86).

Fig. 85 shows a diagram of the simplest plasma electrolytic reactor, for which the patent № 2157862 has been received [86].

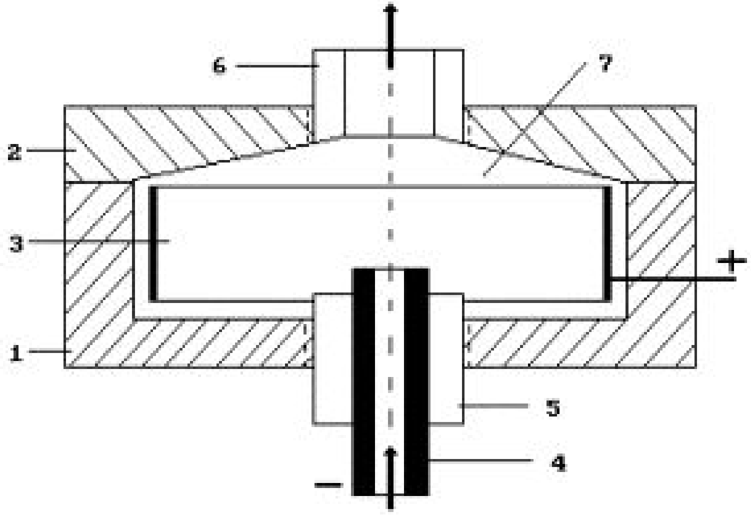

Fig. 85. Diagram of plasma-electrolytic reactor (Patent № 2157862):
1 - housing of the reactor, 2- lid of the reactor, 3 – anode, 4 – cathode (inlet pipe),
5 – bushing, 6 – outlet pipe, 7 – interelectrode chamber

---

[50] Tadahiko Mizuno and Tadayoshi Ohmori (Hokkaido National University, Sapporo, Japan) published the science paper *"Strong Excess Energy Evolution, New Element Production and Electromagnetic Wave and/or Neutron Emission in Light Water Electrolysis with a Tungsten Cathode".* Infinite Energy, 1988. Vol.4, Issue 20, pages 14-17.

Chamber 1 and lid 2 of the reactor (Fig. 85) can be made of acrylic plastic or fluoroplastic. It is desirable to make anode 3 of titanium covered with ruthenium oxide (ortho) or simply of titanium. Hole cathode 4 is made of molybdenum. Bushing 5 and outlet pipe 6 are made of fluoroplastic. The areas of working surfaces of the anode and the cathode are chosen in such a way that density of current density on the cathode exceeds current density on the anode several dozen times, and the distance between the anode and the cathode is equal to 8÷10 cm. Weak (one molar) solutions of alkali, acids, etc., can serve as working solutions.

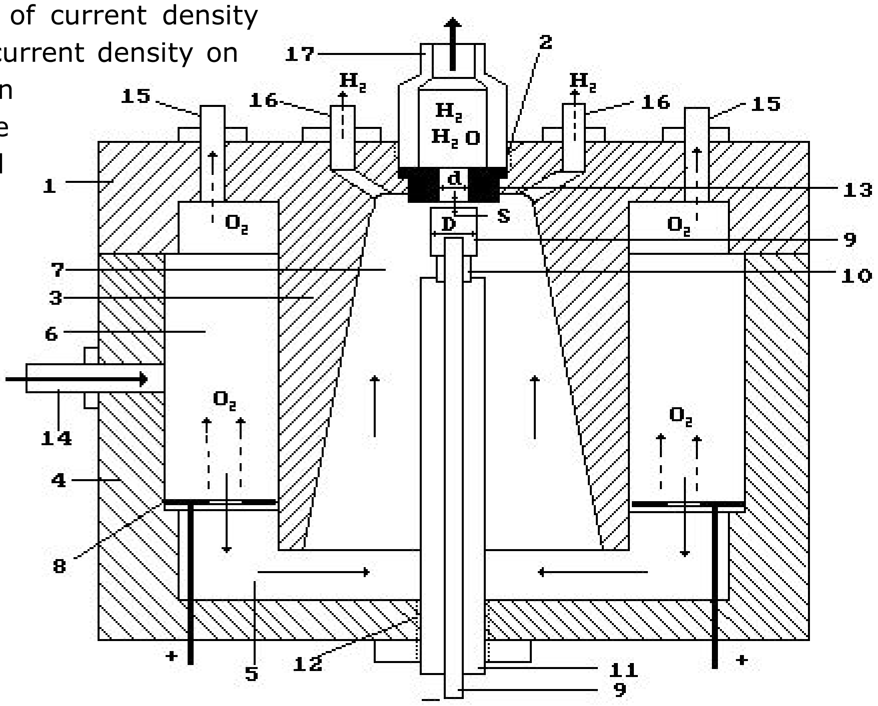

Fig. 86. Diagram of plasma-electrolytic reactor (Patent № 2167958): 8 – anode, 9 - cathode

Fig. 87 shows a diagram of the reactor, for which the patent № 2157427 has been received [85]. The diagram of the plasma electrolytic reactor, for which the patent № 2157861 has been received, is given in Fig. 88 [87].

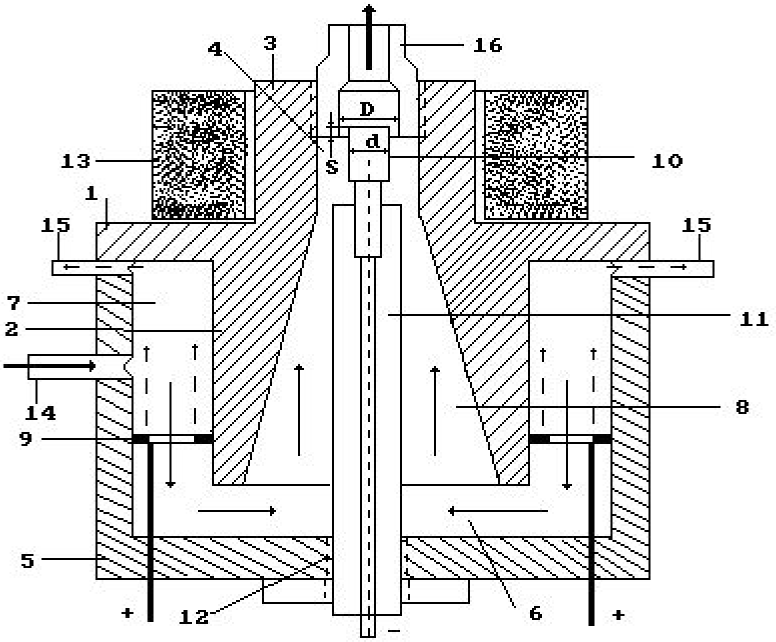

Fig. 87. Diagram of a model of the plasma electrolytic reactor (Patent № 2157427): 1- body, 5 – lead, 9 – anode, 10- cathode, 13 – magnet

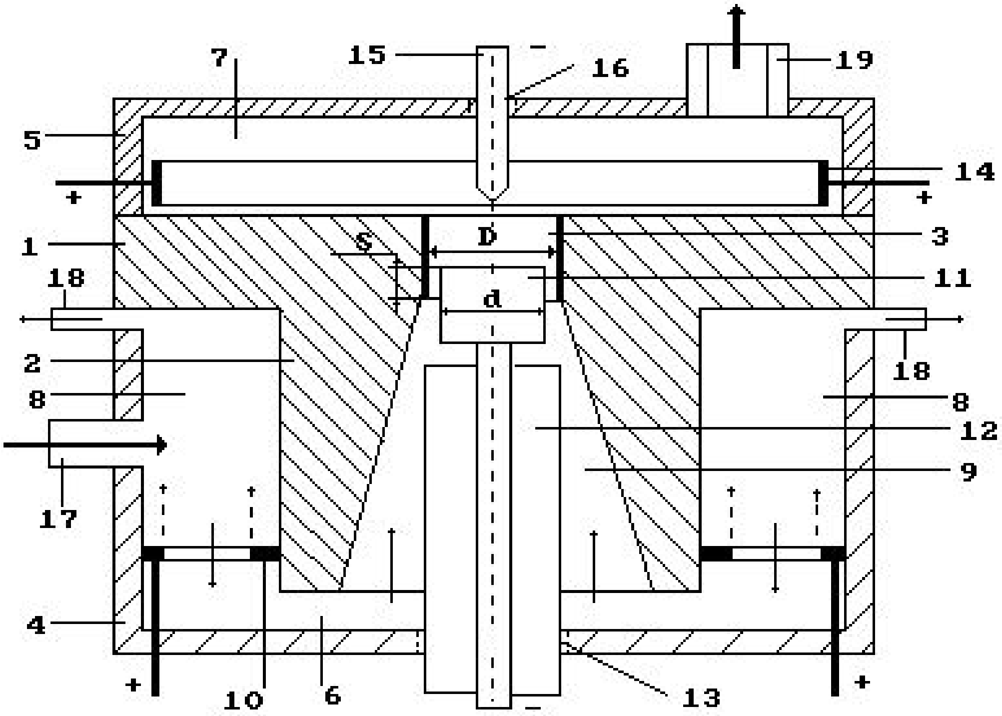

Fig. 88. Diagram of a model of the plasma electrolytic reactor (Patent № 2157861): 1- body, 4 – lower lead, 5 – upper lead, 10 and 14 – anodes, 11 and 15 – cathodes

We'd like to warn in advance that the effect is demonstrated in a narrow range of the combination of various parameters of the reactor and plasma-electrolytic process.

The plasma-electrolytic reactor generates energy being available in heat of heated water, water steam of various temperature, atomic and molecular hydrogen, oxygen, ozone, light radiation and noise.

It is not easy to register each of the above-mentioned types of energy separately. It is easy to measure thermal energy being available in heated water and stream. The experience has shown that it is enough for the proof of positive efficiency of the plasma-electrolytic reactor.

Efficiency of the reactor determines the general index of efficiency K_o taking into consideration electric power E_e being introduced into the reactor thermal energy E_T, which is accumulated in heated water solution and water vapor and energy E_g being available in released gases (hydrogen and oxygen) as well as light energy E_b and noise energy $E_{\text{з}}$ [109]

$$K_o = \frac{E_T + E_g + E_b + E_{\text{з}}}{E_e}. \quad (298)$$

But one should bear in mind that not all designs of the reactors and not all operation modes demonstrate positive (K_0 >1) efficiency. It is easy to burn plasma, but it is difficult to produce additional energy from it.

Nevertheless, the official commission, which consisted of the specialists of the adjacent fields of knowledge, proved positive energy efficacy of one of the reactors and one of the modes of its operation.

Laws of Change of Voltage, Current and Power in Power Supply Circuit of the Plasma-electrolytic Reactor

Let's analyse the oscillograms[51] of voltage, current and power in the electric circuit, which supplies the plasma-electrolytic reactor with power in the gas operation mode. Figs 89, 90, 91 show an oscillogram of voltage, current and power obtained by us together with the specialists of St.-Petersburg firm "Algorithm". The measurements were carried out with the help of the electron oscillograph[52] "Handyscope-2", which registered 10000 ordinates in 0.1 range; it provided high accuracy of the measurements. The measurements results correspond to the reactor mode intended for production of gases, not heat. The measurements were carried out at the same time in three ways: with the help of the voltmeter and ammeter, the electric meter and the electron oscillograph. The following readings were registered in the protocol of control experiments during the experiment (300 s) given for one hour of the reactor operation:

1. Voltmeter and ammeter – 587 W;

2. Electron oscillograph – 716 W;

3. Electric meter – 720 W.

The commission has made the conclusion that the measurements of the electric power consumed by the plasma-electrolytic reactor made with the help of the electric meter are the correct ones. It is necessary to add that the given data correspond only to one operation of the reactor, which plasma glow irregularity can be clearly seen without any measurement and is easily observed due to sharp deviations of the pointer of the ammeter.

But there are such operation modes, at which plasma burning is stable, and the pointer of the ammeter does not oscillate. Unfortunately, the indices of such operation mode have not been registered with the help of the electron oscillograph, and we have no comparative data on measurements for this mode. We can only suppose that the readings of the voltmeter and the ammeter deviate insignificantly from the indices of the electron oscillograph and the electric meter [109].

---

[51] Images of waveforms registered on an oscilloscope.

[52] Oscilloscope.

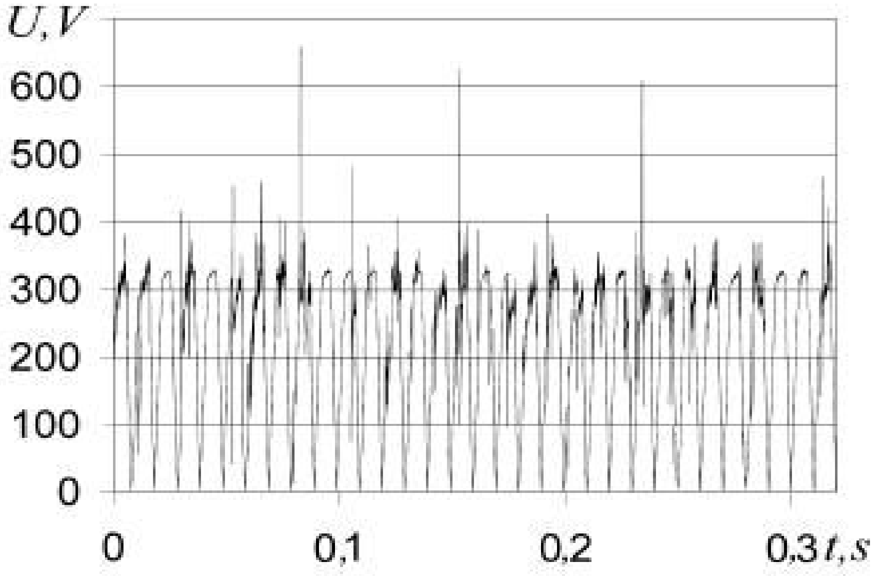

Fig. 89. Voltage change oscillogram in power supply net of the plasma-electrolytic reactor

Fig. 89 shows the oscillogram of voltage across the circuit of power supply of the reactor adjusted for gas operation mode. The voltmeter has shown stable voltage of 220 V at this mode. Sharp deviations of voltage are observed on the oscillogram. Carrier frequency of rectified voltage of 100 Hz has harmonic with less amplitude and greater oscillation frequency. The reduction of the amplitude of carrier frequency is interrupted in a simple way: short-time increase of current has led to short-time reduction of voltage.

It is more difficult to explain a voltage amplitude increase. Availability of a capacitor or an inductor in the circuit can be the cause, energy can be accumulated there and then released increasing voltage in the power supply net. It is difficult to estimate capacity value of the reactor consisting of the flat anode and the core cathode. The transformer has inductive capacity in the power supply circuit. It is possible to determine its role in the formation of voltage oscillations, which amplitude is above the carrier frequency amplitude.

Three oscillations with amplitude up to 600 V and higher are the exception (Fig. 89). The processes, which take place in the reactor, can be the only source of these oscillations. Which processes? We do not know yet. We can suppose that they correspond to the processes of birth of helium atoms, then we should acknowledge availability of cold nuclear fusion. These oscillations can be connected with the process of trapping of the electrons by the protons and the formation of the neutrons [51]. An exact answer for this question will be given due to the results of further investigations.

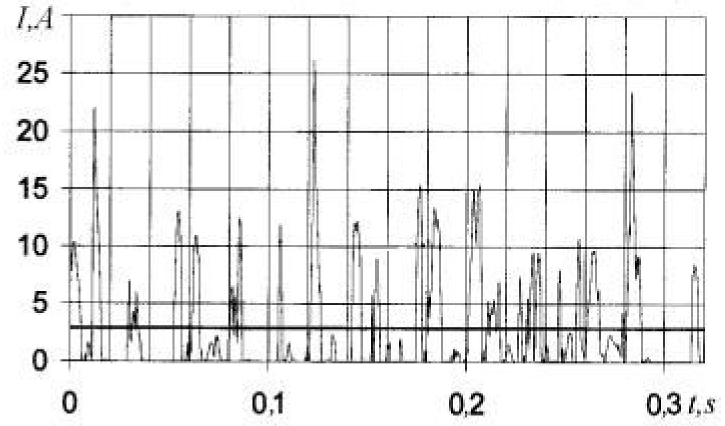

Fig. 90. Current change oscillogram in power supply circuit of the plasma-electrolytic reactor

Fig. 90 shows the electric current oscillogram. Its maximal values are 25 amperes, but these peaks are connected in time with the voltage increase peaks (Fig. 89). Gaps of time are clearly seen when current is completely unavailable. Its average value is equal to 3.8 amperes. Intensive deviations of the pointer of the ammeter have been observed [109].

Certainly, the gaps of time connected with absence of current in the power supply circuit of the reactor have much information concerning the plasma-electrolytic reactor itself (Fig. 90).

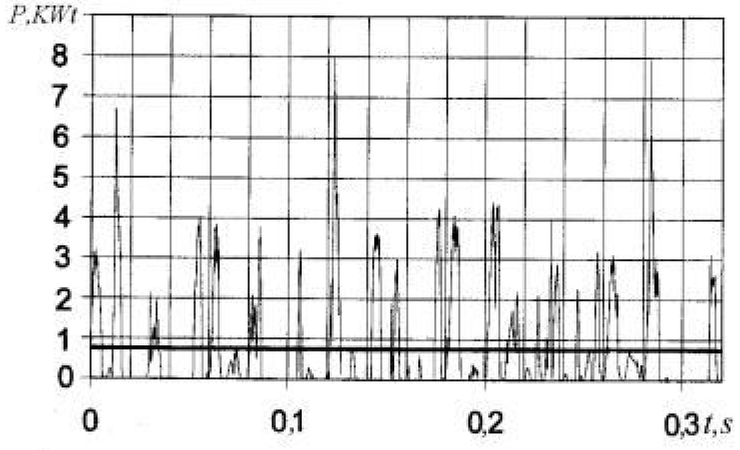

Fig. 91. Power change oscillogram in power supply circuit of the plasma-electrolytic reactor

First of all, chaotic character of the proton separation of hydrogen atoms from water molecules is a cause of such chaotic change of strength of current. The gas – vapor mixture promotes it. As it is accumulated near the cathode and has no time to exceed the limits of the pericathode[53] space, it insulates partially, sometimes completely the cathode from the solution increasing resistance in power supply circuit. As a result, the electric circuit is constantly disconnected, therefore the value of current is reduced down to zero. In the moments when strength of current is equal to zero, the plasma is

---

[53] Peri (from Greek) means "about, around"; the phrase "pericathode space" therefore means the space around the cathode.

extinguished. When pericathode space becomes free from gas – vapor mixture, and the solution comes into contact with the cathode, strength of current is increased sharply. Thus, when the gases are generated, the reactor operates in pulse mode, at which other resonance phenomena are possible, and, consequently, the sharp increase of efficiency of the process [109].

Power change regularity (Fig. 91) in power supply circuit of the plasma-electrolytic reactor in the gaseous mode of its operation is similar to the change of strength of current. Peak power reaches 8 kW though its mean value is only 720 W.

Protocol of Control Experiments

May 22, 1998, City of Krasnodar [Russia]

- The plasma–electrolysis reactor was elaborated by the chair of theoretical mechanics of the Kuban State Agricultural University by Prof. Ph.M. Kanarev, doctor of technical sciences and E.D. Zykov, candidate of chemical sciences, and was presented for control testing to a commission formed by [65], [109]:
    - V.V. Fomin – head of the Chair of Physics of the Kuban State Agricultural University, Doctor of physical and mathematical sciences, professor, the Chairman of the commission;
- Members if the commission, including:
    - A.S. Trofimov, professor at the Chair of Industrial Thermoenergetics of the Kuban State Technological University, Doctor of technical sciences, Honoured Scientist of Russia, Associate Member of the International Academy of Higher Education, winner of the prize of the Government of the Russian Federation for science and engineering (thermal power engineer);
    - N.P. Berezina, Doctor of chemical sciences, professor of the Kuban State University (electrochemist);
    - Ph. M. Kanarev, head of the Chair of Theoretical Mechanics of the Kuban State Agricultural University, Doctor of technical sciences, professor;
    - N.A. Singaevsky, Candidate of technical sciences, assistant professor of the Krasnodar higher military school for rocket troops, colonel (power engineer);
    - E.D. Zykov, Candidate of chemical sciences (physical chemistry of surface phenomena).
- The commission has performed control experiments of the plasma-electrolytic reactor.

1. The unit with the diameter of 130 mm and the height of 100 mm is made of dielectric material (acrylic plastic and Teflon) has the inter-electrode chamber, the anode, the cathode and the connections for feeding of working solution into the reactor and withdrawal of heated liquid and vapor - gaseous mixture out of it.

2. The reactor is connected to the supply line of rectified current with adjustable voltage.

3. Diluted alkaline water solution with flow controlled by a valve according to the flow measuring instrument serves as heat - transfer medium.

4. The solution and the vapor - gaseous mixture heated by the reactor are removed from the reactor via a branch pipe.

The reactor operates as follows. The desired flow of the solution is established with the help of a rotameter[54], and power with initial voltage near to zero is turned on. Then voltage is stepped up, and at 150-200 V stable plasma is formed in the pericathode space. In a few seconds after the appearance of plasma the outflow of the heated solution and the vapor - gaseous mixture starts. Quantity of vapor can be controlled. In order to increase the accuracy of the measurements the reactor has been adjusted for heating of the solution at a minimal quantity of vapors being formed.

Instruments and Equipment Used for the Experiment

The instruments used for input power measurement: an electric meter, voltmeter (accuracy class 0.2, GOST 8711-78), ammeter (accuracy class 0.2, GOST 871160).

The instruments used for output power measurement: mercury thermometers with value of a division of 1 and 2 degrees and with the scales up to 100 and up to 160 degrees, respectively; measuring vessels with capacity of 3 litres, measuring glasses with capacity of 1000 ml, a stopwatch with value of a division of 0.1 s, a balance with value of a division of 5 grams.

Methodology of Experiment

A measuring vessel with capacity of 3 litres was placed 0.7 meters above the reactor on the balance and was connected with the reactor with the help of the pipes via the rotameter used as a solution flow rate indicator. The desired flow rate was established, and the reactor was started. After its operation mode became stable, and the solution level was lowered to the control marker, the stopwatch was turned on, and the solution weight change indication and counting of the number of the electric meter disk rotations and the recording of the reading of the voltmeter and the ammeter began. Simultaneously the outflow of the solution is connected to the measuring glass, which weight was determined beforehand.

During the experiment the following data were registered: the time of starting and ending of the experiment, the electric meter readings, the mean values of voltmeter and ammeter as well as the reading of the thermometers measuring the temperature at the inlet and the outlet of the solution. Besides, the insignificant deviations of the solution consumption were periodically adjusted according to the reading of the rotameter.

The experiment was finished when the reduction of the weight of the solution in the measuring vessel arranged on the balance attained the check value. At this moment the outlet of the solution from the reactor was switched to a spare vessel.

---

[54] Type of flow meter

Experimental Results

The preliminary tests performed by the authors have shown that the values of heat capacity C_1 and heat of evaporation C_2 for the solution do not differ greatly from the respective values for water; therefore, these parameters have been taken the same as for water: C_1=4.19 kJ per kg degrees and C_2=2269 kJ per kg. The experimental results are given in Table 40.

Table 40:

Indices	1	2	3	Average
1 – mass of empty measuring glass m_o , grams	…	…	…	345
2 – mass of the solution prior its entering the reactor m_1, grams	1200	1195	1200	1198
3 – mass of the solution after outflow from the reactor m_2, grams	1180	1180	1180	1180
4 – mass difference, inlet and outlet, $\Delta m= m_1- m_2$, grams	20	15	20	18.3
5 - reactor inlet temperature t_1 , degrees	21	21	21	21
6 - reactor outlet temperature t_2 , degrees	85	85	85	85
7 - temperature difference $\Delta t= t_2- t_1$, degrees	64	64	64	64
8 - duration of the experiment, t, seconds	279	307	282	289
9 – number of rotations of the electric meter disc during the experiment n, rot.	39.5	44.5	41.5	41.8
10 – electric energy consumption according to the electric meter readings, E_1=n×3600/600, kJ Note: 600 rotations of the electric meter correspond to 1 kW h of electric power. The electric meter was connected in the power supply circuit of the reactor before the rectifier and registered power consumption for the reactor operation and the current rectifier. The voltmeter and the ammeter are connected in the reactor energy supply circuit after the rectifier and are aimed for measuring the electric energy consumed by the reactor.	237	267	249	251
11 – readings of voltmeter V, volts	196	200	199	198.3
12 – ammeter readings I, amperes	3.66	3.30	3.58	3.51
13 – electric energy consumption according to the readings of the voltmeter and the ammeter, E_2=I×V×t, kJ	220.1	202.6	200.9	201.2
14 – power energy for heating the solution, $E_3= C_1\times m_1\times \Delta t$, kJ	322.0	320.4	322.0	321.5
15 – energy consumed for forming of vapors, $E_4= C_2\times \Delta m$, kJ	45.4	34.0	45.4	41.6
16 – total energy for heating and vapors E0= E3+ E4, kJ	367.4	354.5	367.4	363.1

Indices	1	2	3	Average
17 – COP[55] of the reactor according to the electric meter readings $K_1 = E_0 / E_1$	**1.55**	**1.33**	**1.47**	**1.45**
18 – COP of the reactor according to the voltmeter and ammeter readings $K_2 = E_0 / E_2$	**1.87**	**1.75**	**1.85**	**1.82**

The commission has stated that during the experiment it can be easily seen that gases are flowing out of the connection pipes of the cathode and anode spaces. These gases are products of the decomposition of the solution, mainly of the water molecules, and are contributing to the decrease of the weight of water. The authors have not yet elaborated a method for measuring the quantity of these gases at this time, and therefore their energy content was added to the energy content of the water vapors. Given that the energy content of the gases is much higher than that of the vapors, the COP of the reactor is higher as stated in Table 39. COP of the reactor K_2 is based on the reading of the voltmeter and the ammeter and needs to be improved, because the reactor generates high frequency oscillations, which influence the readings of the instruments. The commission states that the reactor also generates light and sound energy.

The commission is stating that if the contribution of the emitted gases, the light energy and the outer energy losses of the reactor are considered the COP values are higher than those established.

The commission emphasizes the newness of the plasma formation phenomena at the electrolysis of water, associated with incompletely studied processes, which generate excess energy and considers that these deserve further thorough study with the aim of finding their possible uses in different scientific and technical areas.

The experiment demonstrates vividly that the plasma-electrolytic reactor generates energy in the form of heat of the heated solution, vapor of various temperature, hydrogen and oxygen as well as light radiation noise and high frequency electric oscillations [65].

In order to measure all above-mentioned components of total energy generated by the plasma-electrolytic reactor it is necessary to have the corresponding instruments and equipment. We have not had such possibility due to lack of financing, that’s why we have managed to measure thermal energy only and quantity of generated gases with the help of an anemometer.

---

[55] Coefficient of Performance (higher COP = lower operating costs)

Results of Fine Plasma Experiments

If water molecules are in ac filed and in high temperature thermal field at the same time during active turbulent flow, the process of separation of the protons and the hydrogen atoms from water molecules becomes chaotic. In this case, sundry variants of this process are possible. The separation of hydrogen atoms from water molecules is the most probable variant (Fig. 92, a, b).

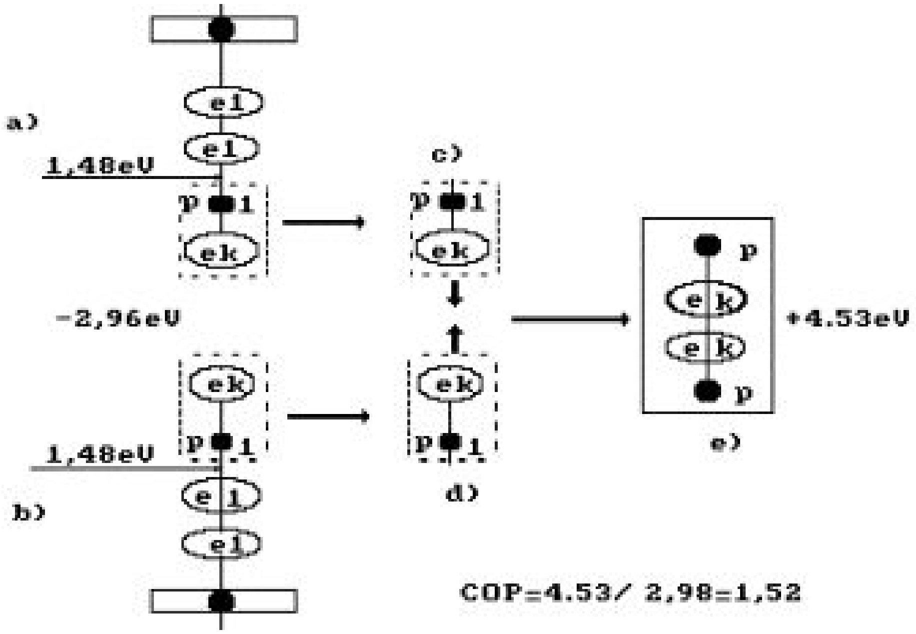

Fig. 92. Diagram of hydrogen molecule fusion during water electrolysis: a), b) - water molecules; c), d) - hydrogen atoms; e) - orthohydrogen molecule

As it is clear, 4.53 eV of energy is released during fusion of one hydrogen molecule (Fig. 92). In this case, the following reaction takes place at the cathode

$$2H_2O + 2e^- \Rightarrow H + H + 2OH^- \Rightarrow H_2 + 2OH^- + 4.53eV \qquad (299)$$

During plasma water electrolysis, the oxygen formation process in the anode area is less intensive than during low-voltage electrolysis, because its greater part is released in the cathode area together with hydrogen. If the bonds of the oxygen atom with the hydrogen atoms are destroyed in the water molecule only in a thermal way, no additional thermal energy is generated (as we have shown earlier). That is why the thermal energy efficiency index of such process will be as follows (Table 41) [109].

$$K = 4.53/(2 \cdot 1.48) = 1.52 \qquad (300)$$

Table 41:

Indices	1	2	3	Mean
1 – mass of the solution, which has passed through the reactor m, gr.	1100	1070	1060	1077
2 – temperature of solution at the input of the reactor t_1, degrees	17	17	17	17
3 – temperature of the solution at the output of the reactor t_2, degrees	22	22	22	22
4 – temperature difference of the solution $\Delta t= t_2 - t_1$, degrees	5	5	5	5
5 – durability of the experiment Δt, seconds	300	300	300	300
6 – number of rotations of the disc of the counter during the experiment n, rotations	2.4	2.4	2.4	2.4
7 – electric power consumption according to the reading of the counter, $E_1=\times 3600/600$ kJ Note: 600 rotations of the counter correspond to 1 kWh of electric power	14.4	14.4	14.54	14.4
8 – reading of voltmeter V, V	140	140	140	140
9 – reading of ammeter I, A	0.34	0.34	0.34	0.34
10 – electric power consumption according to indices of voltmeter and ammeters, $E_2=I\times V\times \Delta t$, kJ	14.28	14.28	14.28	14.28
11 – power spent for heating of the solution, $E_3=C\times m\times \Delta t$, kJ	23.45	22.42	22.21	22.69
12 – reactor efficacy efficiency index according to the reading of the counter $K^1 = E_3/ E^1$	**1.60**	**1.56**	**1.54**	**1.57**
13 – reactor efficiency index according to the reading of voltmeter and ammeter $K_2= E_3/ E_2$	**1.64**	**1.57**	**1.56**	**1.59**

Let's consider one more variant of hydrogen molecule formation from a destroyed water molecule. It is clear from Fig. 91 a, b, c that in order to separate the proton of the hydrogen atom from water molecule, it is necessary to spend 1.48 eV of energy. Later on we'll show that during further fusion of two hydrogen atoms (0.86x2)=1.72 eV of energy will be released. Then during hydrogen molecule fusion 4.53 eV of energy will be released. During the fusion process of two hydrogen atoms and a hydrogen molecule, total quantity of energy will be 1.72+4.53=6.25 eV. The following reaction will take place at the cathode at that time [109]:

$$2H_2O \Rightarrow 2OH^- + H^+ + H^+ + 2e^- \Rightarrow H + H + 2OH^- + 2\cdot 0.86eV \Rightarrow$$
$$\Rightarrow H_2 + 2OH^- + 1.72eV + 4.53eV \Rightarrow H_2 + 2OH^- + 6.25eV \qquad (301)$$

where H^+ is the proton.

In this case, the index of heat energy efficacy will be equal to (Fig. 93), (Table 42) [109]

$K= 6.25/2.96=2.11$ (302)

A modified plasma-electrolytic reactor (Fig. 88) adjusted to non-plasma operation mode has been used for the experiments (Fig. 93, Table 42). The experiments method is simple: electrolytic solution passes through an electrolytic cell (reactor). Released energy has been determined according to difference of temperature at the input and at the output of the reactor and expended energy has been determined with the help of a domestic electricity meter as well as voltmeter and ammeter of the highest accuracy class. Energy losses have not been taken into consideration, but one has tried to make temperature difference Δt a small one in order to reduce them.

Let's give the second variant of the calculation of the experimental result (Table 42) using not the theoretical results of energy consumption for hydrogen production, but the experimental ones. One cubic metre of hydrogen contains 1000/22.4=44.64 moles of molecular hydrogen or 89.28 moles of monatomic hydrogen. During fusion of one atom of hydrogen 0.86 eV of energy is released; during fusion of 89.28 moles of hydrogen atoms the following quantity will be released

$$H^+ + e^- \rightarrow H + 0.86 \cdot 89.28 \cdot 1.602 \cdot 10^{-19} \cdot 6.023 \cdot 10^{23} = 7322.3 kJ/m^3 \qquad (303)$$

Further fusion of one cubic metre of hydrogen will add

$$H + H \rightarrow H_2 + 436 \cdot 44.64 = 19463.0 kJ/m^3 \qquad (304)$$

The results of experimental check of the given theoretical calculation are given in Table 42.

Table 42:

Indices	1	2	3	Mean
1 – mass of the solution, which has passed through the reactor m, degrees	1200	1230	1160	1197
2 – temperature of solution at the input of the reactor t_1, degrees	20	20	20	20
3 – temperature of the solution at the output of the reactor t_2, degrees	31.0	30.5	31.0	30.8
4 – temperature difference of the solution $\Delta t = t_2 - t_1$, degrees	11.0	10.5	11.0	10.8
5 – durability of the exper. $\Delta\tau$, s	300	300	300	300
6 – number of rotations of the disc of the counter during the experiment n, rotations	4.44	4.44	4.44	4.44
7 – electric power consumption according to the reading of the counter $E_1 = n \cdot 3600/600$ kJ Note: 600 rotations of the counter correspond to 1 kWh of electric power	26.64	26.64	26.64	26.64
8 – reading of voltmeter V, V	40	40	40	40
9 – reading of ammeter I, A	1.80	1.80	1.80	1.80
10 – electric power consumption according to indices of voltmeter and ammeters, $E_2 = I \cdot V \cdot \Delta\tau$, kJ	21.60	21.60	21.60	21.60

11 – power spent for heating of the solution, $E_3=C\cdot m\cdot\Delta t$, kJ	55.31	54.11	53.46	54.29
12 – reactor efficacy efficiency index according to the reading of the counter $K_1= E_3/ E_2$	**2.08**	**2.03**	**2.01**	**2.04**
13 – reactor efficiency index according to the reading of voltmeter and ammeter $K_2= E_3/ E_2$	**2.56**	**2.50**	**2.47**	**2.51**

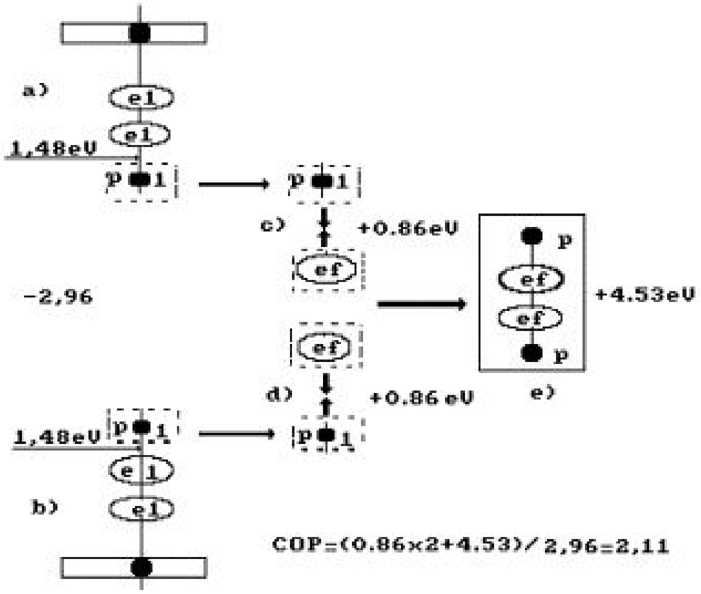

Fig. 93. Diagram of fusion of an atom and a molecule of hydrogen in the process of water electrolysis: a), b) - water molecules; c), d) - hydrogen atoms; e) – orthohydrogen molecule

If we add together the energies of fusion of the atoms and the molecules of hydrogen, we'll get (7322.3+19463.0)=26785.3 kJ. In order to produce one cubic meter of hydrogen according to the existing technology, it is necessary to spend (4.0x3600)=14400 kJ. Index K of heat energy efficacy of such process of electrolysis will be (Table 42) [109]

$$K = (26785.3/14400)= 1.86 \qquad (305)$$

If we add energy content of hydrogen being produced (90x142)=12780 kJ, index K_0 of total energy efficacy will be [109]

$$K_0 = (39565.3/14400)=2.75 \qquad (306)$$

During the analysis of plasma electrolytic process, one should take into consideration the fact that in some operation modes water in the cathode area is decomposed not only into hydrogen and hydroxyl OH^-, but into hydrogen and oxygen. In this case, ion OH^- is decomposed. We have shown that electrodynamic binding energy of the hydrogen atom with the oxygen atom in water molecule is equal to 0.74 eV, and thermal binding energy is 1.48 eV.

If in the cathode zone only the thermal process of water molecule decomposition into hydrogen and oxygen took place, the energy expenses for this process during fusion of one cubic meter of hydrogen would be

$$\frac{1000\cdot 1.48\cdot 2\cdot 6.02\cdot 10^{23}\cdot 1.6\cdot 10^{-19}}{22.4\cdot 1000}=12728kJ. \qquad (307)$$

If the water molecules were decomposed into hydrogen and oxygen in the cathode area only mechanically, the energy expenses would be half, i.e. 6364 kJ.

Here, the problem is in reduction of intensity of the process of repeated bonding of hydrogen and oxygen in the plasma area. If this problem is not solved, energy efficacy of this process is increased, because during water molecules fusion the energy volume will be twice as much than spent for their mechanical destruction.

In reality, the protons and the atoms of hydrogen are be separated from water molecule simultaneously with the process of destruction of water molecule into hydrogen and hydroxyl OH^- and into hydrogen and oxygen; that's why thermal energy efficacy index will vary within the range of 1.10÷2.00 (Table 41, 42).

Plasma-Electrolytic Reactor as Gas Generator

The new theory of water electrolysis predicts the possibility of significant reduction of power consumption for production of hydrogen from water.

But it is possible to do it if the above-mentioned conditions are observed. For example, let us pay attention to the orthohydrogen structure, which diagram is given in Fig. 53, b. This structure is formed when the hydrogen atoms of two water molecules approach each other. In this case, each of two water molecules gives one proton and one electron to the hydrogen molecule, and the hydrogen molecule is formed without the electrons emitted by the cathode, i.e. without direct consumption of electric energy for this process. In this case, electric energy is spent only for a separation of the hydrogen molecule being formed. Two water molecules connected in such a way correspond to the simplest cluster [109].

High temperature of plasma forms the conditions when a set of various processes takes place at the cathode. First of all, water is boiled and evaporated. At the same time, one part of water molecules is disintegrated with a release of the atomic hydrogen, another part of the molecules forms the orthohydrogen molecules. A part of water molecules is disintegrated completely and is released at the cathode together with hydrogen and oxygen. A part of hydrogen is combined with oxygen again generating micro explosions (noise) and forming water.

But one should bear in mind that if plasma disintegrates water molecule into hydrogen and oxygen and if these gases contact plasma, hydrogen is combined with oxygen, and water is formed. Noise generated by plasma is hydrogen micro explosions. Taking into consideration the above-mentioned fact the larger the volume of hydrogen burnt in plasma, the smaller its volume in the gas-vapor mixture. It means that such reactor operation modes are required when quantity of burnt hydrogen is minimal one.

During plasma electrolysis of water, water vapor, hydrogen and oxygen are released simultaneously. If vapor is condensed, gas mixture is released (Fig. 94).

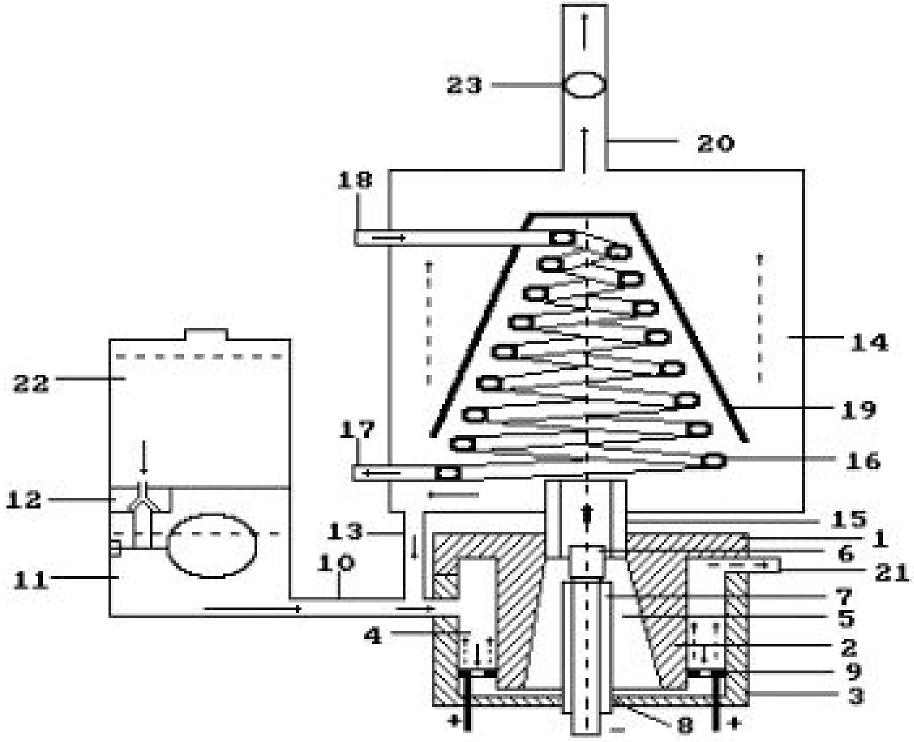

Fig. 94. Diagram of the plasma electrolytic generator of hydrogen: 1 - lid of the reactor; 3 - body of the reactor; 6 - the cathode; 9 - the anode; 11 - solution doser; 16 - cooler; 20 - pipe for gas release; 23 – anemometer

In order to measure gas flow rate, both a conventional anemometer and an electronic one have been used. Diameter of the electronic anemometer was equal to internal diameter of the gas make tube (23, Fig. 94). Its readings were registered and processed by the computer. The experiment was performed dozen time, and each time its readings were reproduced with small deviations [109]. But we had no hydrogen analyzer, that's why the results being obtained cannot be considered as final ones. We admonished it in all editions of the book "Water is a New Source of Energy" with such a phrase: "We abstain from lending an official status to these results with the hope to get necessary financing and to repeat them with a complete set of the necessary devices" [109].

In the middle of the year of 2002 we received small financing, which allowed us to make a new reactor and to buy some measuring instruments, in particular the scales with the measurement limit up to 600 g and accuracy of 0.02 g. Careful preparation allowed us to increase duration of continuous operation of the reactor and to register solution consumption for gas production.

The main difficulty of operation with the hydrogen is in the fact that its mixture with air (4-74)% or oxygen (4-94)% is combustible, and the fact was emphasized more than once during the experiments making the researches be very careful. The second difficulty during hydrogen quantity measurements generated by the plasma electrolytic reactor is in the fact that its molecule has the smallest dimensions, that’s why it penetrates easily to the places where the molecules of other substances do not penetrate. Molecular hydrogen diffuses easily even into metals [39]. For example, one volume of palladium absorbs up to 800 volumes of hydrogen.

Gas flow speed was measured with the help of various anemometers, its readings being registered with the help of the computer. Numerous measurements and numerous analysis of gas flow speed measurement accuracy with the help of the anemometers showed that error of a conventional anemometer can be 100%. That’s why in order to increase safety of the experiment, registered speed of gas flow was reduced 2-fold. Taking it into consideration, energy consumption per cubic meter of gas mixture is given in Table 43. The given data were obtained by us together with A.I. Tlishev, D.V. Korneev and D.A. Bebko. Durability of one repetition of the experiment is 300 s.

Table 43. Influence of voltage on volume of gases being generated

U, volts	180	200	220	240	260	280
W, litre	23.2	81.0	108.0	127.5	127.5	121.5
kWh/m^3	1.04	0.22	0.14	0.14	0.15	0.13

Durable continuous operation (10 hours) of the reactor with various solutions gave the following results (Table 44).

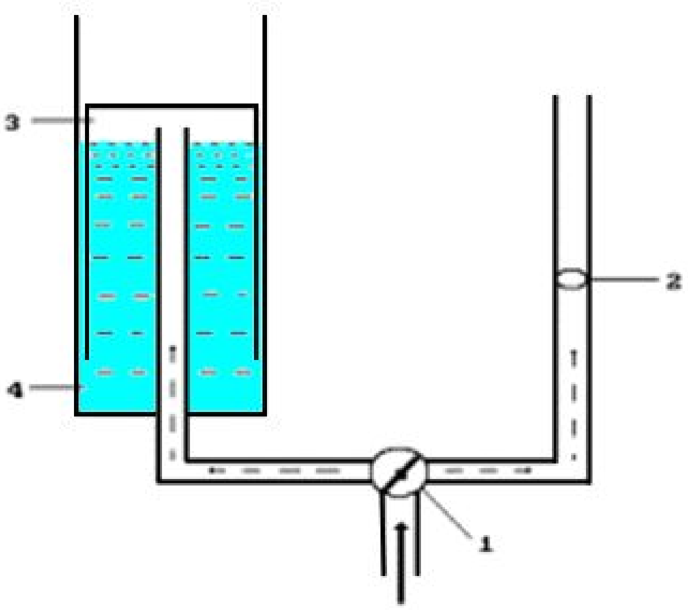

Fig. 95. Diagram of measurement of flow rate of the gas and its volume:
1 - tap for gas flow movement direction switching, 2 – anemometer,
3 – graduated tank, 4 – water tank

Table 44. **Experimental results**

Indices	Water consumption, kg	Volume of gases, m^3	Energy expenses, kWh/m^3
KOH	0.035	8.00	0.52
NaOH	0.072	11.20	0.30

It is known that it is possible to produce 1220 litres of hydrogen and 622 litres of oxygen from one litre of water. Quantity of the gases generated by the plasma electrolytic process is much greater than it is possible to get from consumed water (Table 44). It was a strong reason for a search of the measurement error. For this purpose, the diagram of measurement of flow rate of the gases and their quantity was used (Fig. 95).

The results of the measurements were as follows. The anemometer showed that 200 litres of gas mixture penetrated through it during 10 minutes. Nearly one litre of gases was in the graduated tank during this period.

Thus, the measurement of gas flow with the help of the anemometers distorted the result 200-fold. It should be mentioned that the reactor operated in the production mode of hydrogen and oxygen in the cathode zone. As a result, their mixture burst. The pulses of these explosions increased the readings of the anemometer.

It has become necessary to return to the reactor operation modes when few oxygen is released in the cathode zone or to the operation with the plasma in the centre of electric field in solution between cathode and anode. The results of these experiments will be published in the third edition of this book. Now we have the results of low-current electrolysis of the water (Table 45).

Protocol of Tests of The First Model of Low-Current Electrolyzer

It is known that it is possible to produce 1.22 l of H_2 + 0.622 O_2 = 1.843 (H_2+O_2) from 1 ml of H_2O.

Table 45. Experimental results

Indices	1	2	3	Average
1-duration of experiment, hour	1	1	1	1
2-voltage, V	70	70	70	70
3-current, A	0.038	0.080	0.098	0.072
4 –power, W	2.7	5.60	6.44	4.91
5-volume of consumed solution, ml	1.67	3.98	4.32	3.32
6-volume of the gas mixture being produced, l	3.08	7.16	7.95	5.95
7-volume of hydrogen being produced, l	2.04	4.75	5.27	4.02
8-energy consumption per l of hydrogen, W×h/l	1.32	1.18	1.22	1.24

9-energy consumption per m^3 of hydrogen, kWh/m^3	**1.32**	**1.18**	**1.22**	**1.24**
9-existing energy consumption for production of 1 m^3 of hydrogen from water, kWh/m^3	**4.00**	**4.00**	**4.00**	**4.00**

We used the weigh method too and had received the same results. Thus the low-current electrolysis allows us to get the inexpensive hydrogen from water too.

WATER IS A SOURCE OF ELECTRIC ENERGY

Theoretical and experimental investigations show that water is a source of not only thermal energy and energy being available in hydrogen and oxygen, but a source of electric energy as well. The diagram of water molecule with ten electrons is given in Fig. 72. We have called this structure a charge molecule of water [75], [99], [109]. It has turned out that there is a possibility to separate the electron, which belongs to hydrogen atom connected with the eighth electron of the hydrogen atom, from water molecule. In this case the proton of hydrogen atom will be connected with the second electron of oxygen atom, and the water molecule will lose one electron and become a semi charged one (Fig. 100).

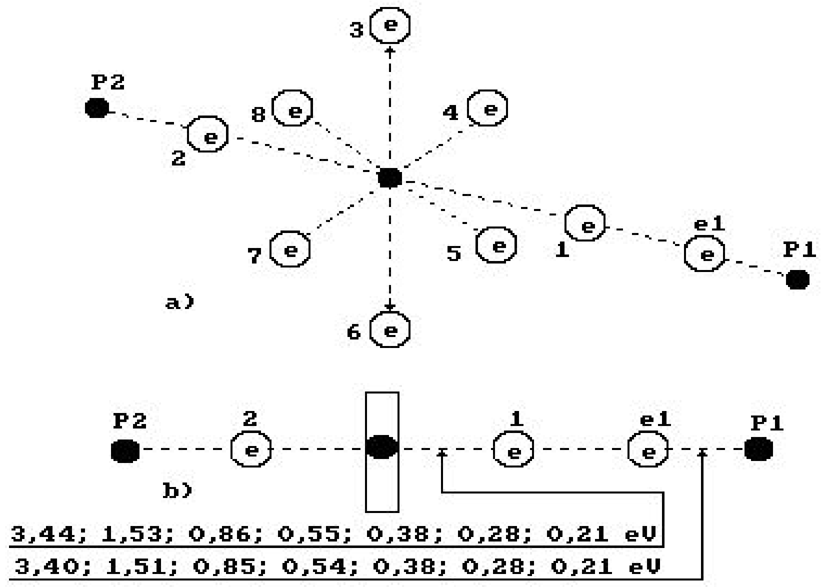

Fig. 100. Diagram of the third model of water molecule

Quantity of electricity coulombs, which is generated in one litre of water when each water molecule loses one electron, will be equal to product of Avogadro constant by quantity of moles of water molecules in one litre [109]

$$96485 \cdot 55.56 = 5360706.5 \text{ Coulombs.} \qquad (311)$$

Taking into consideration the fact that one ampere-hour is 3600 coulombs of electricity, we'll find electrical capacity of one litre of water

$$\frac{5360706.5}{3600} = 1489.1 \text{ Ah} \qquad (312)$$

Experimental investigations show that electrical potential which exceeds the potential delivered to the solution is formed in the electrolytic solution during the definite modes of plasma electrolysis of water. As a result, electric power, which exceeds electric power introduced into the solution, is generated in the electrolytic solution [103].

The analysis of binding energies between the electrons and the protons of the hydrogen atoms in the cluster, which consists of two water molecules (Fig. 101), shows the possibility of realization of various variants of disruption of these bonds. Under the usual conditions the bond A is broken between the protons P_1 and P_2, which belong to the hydrogen atoms in the water molecule. Simultaneous break of the bonds B and C is possible. In the last case, the hydrogen molecule is released. Realization of this or that variant of the bond break depends on the temperature of the environment, in which the water molecules are situated.

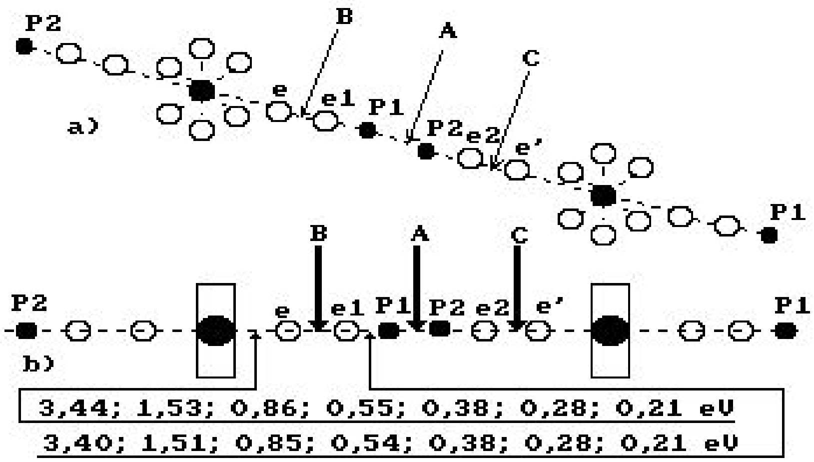

Fig. 101. Diagram of the cluster, which consists of two water molecules

For example, if the water molecules are in steamy state in a cloud, realization of the break A will lead to the formation of positively charged water molecules in the cloud. In another cloud, with another temperature, the bonds break B or C is possible as well as the formation of the negatively charge ions OH^- in the cloud.

As realization of this or that variant of bond break depends on the temperature, we know binding energies and can model this process and use it for production of electric energy from water.

Fuel Cell Efficiency

Fuel cells are considered to be one of the most prospective consumers of hydrogen. But efficiency of the process of the connection of hydrogen with oxygen in a fuel element as well as the formation of electric power are studied insufficiently [78].

The data of one of the fuel cells are given in the report [78]. At hydrogen consumption of 2 kg per hour it generates 30 kWh of electric power. As one cubic meter of gaseous hydrogen weighs 90 g, 2 kg of liquid hydrogen contain 22.2 m^3 of gaseous hydrogen. If we take into consideration that in order to produce 1 m^3 of hydrogen the best industrial electrolyzer consume 4 kWh and assume the energy value as 100%, we'll get energy efficiency of the fuel cell

$$\frac{30\cdot 100}{22.2\cdot 4} = 33.8\% \qquad (313)$$

The source of information [79] reports that efficiency of fuel cells of the third generation with solid electrolyte is near 50% and the use of technology of fuel cells allows increasing efficiency of electric power up to 75%; taking into consideration heat generated by them, efficiency is increased by 90% or 95%.

The same source informs that in April, 1999, the firm "Ecostar Electric Drive Systems" (joint venture of companies Ford, Daimler-Benz and Ballard Power Systems) has been set up for elaboration of a vehicle employing fuel cells. The total amount of investments in the whole work has already reached 700 m dollars. This firm intends to begin the production of series vehicles employing fuel cells in 2004 [109].

Efficiency of fuel cells depends on efficiency of the use of electric possibilities of hydrogen itself. If quantity of the electrons, which belong to the atoms of hydrogen and take part in the formation of electric power of a fuel cell, is taken into consideration, efficiency of physical and chemical process of this cell is less than 1%. Let's make a calculation for the fuel cell, which is described in the report [78]. This fuel cell generates 30 kW of electric power when 2 kg (22.2 m^3) of liquid hydrogen is consumed per hour. As the mole of gaseous hydrogen is equal to 22.4 liters, it is necessary to consume 22222.22/22.4=992.06 moles of molecular hydrogen for the production of 30 kW of electric power [109].

We'd like to remind that a value equal to the product of Avogadro number $N=6.022\times10^{23}$ by the electron charge e = 1.602×10^{-19} is called Faraday constant F_a. This value is measured in coulombs (C) per mole of substance.

$$F_a = N\cdot e^- = 6.022\cdot10^{23}\cdot1.602\cdot10^{-19} = 96485 \text{ C/mol.} \qquad (314)$$

If all protons of 992.06 moles of molecular hydrogen give their electrons to electric net of the fuel cell, 992.06*2*96485=191437818.2 coulombs of electricity are formed, as a result. These are potential possibilities of 22.2 m^3 of molecular hydrogen. In what way are these possibilities used by modern fuel cells?

The fuel cell being considered operates at voltage of 100 V; that's why when 30 kW are generated, current of 30000/100=300 amperes per hour circulates in its electric circuit. 3600 coulombs of electricity are consumed at 1 ampere/hour and 1080000.0 coulombs are consumed at 300 ampere per hour. If we assume that potential quantity of coulombs of electricity, which 22.2 m^3 of hydrogen contain (191437818.2 coulombs) is 100%, actual quantity of coulombs of electricity generated by the fuel cell is

$$\frac{1080000.0 \cdot 100}{191437818.2} = 0.57\% \qquad (315)$$

These are the main reserves of efficiency improvement of the fuel cells!

Feeding of molecular hydrogen to the fuel element is the main cause of a very low (0.57%) electrical efficiency of the fuel cell. There is every reason to hope that minimal tenfold improvement of this efficiency will take place in the nearest future.

The specialists, who are busy with the investigation of fuel cells, should pay attention to importance of the analysis of water produced in the results of its operation. We have shown that water molecules can contain both all 10 electrons (charged water) and 8 electron (discharged water). If water is pure (without impurities), there should be a difference in weight of one litre of charged water and discharged water, which can be easily found out. The greater the number of discharge molecules in water being produced after the operation of the fuel cell, the more effective the energy possibilities of hydrogen are used.

The given calculations show that energy properties of hydrogen in fuel cells are used only by 0.6%. **Tenfold increase of this index is equal to the transit to hydrogen power in all fields of human activities** [41]**.**

Law of Conservation of Angular Momentum

The law of conservation of angular momentum is one of the main laws of the Nature. In order to have a clear idea concerning the essence of this law, let us consider the phenomenon, which can be easily observed and which demonstrates how it works.

If you watch competitions in figure skating by TV, you remember how a figure skater changes speed of his rotation relative to the axis, which passes through his body. At first he rotates with small speed with his arms stretched to the sides. Then he clasps his arms to his breast or raises them upwards, and his rotation is accelerated sharply. If he stretches his arms, the rate of his rotation is reduced. What's the matter? This phenomenon is governed by one of the most fundamental laws of the Nature – the law of conservation of angular momentum. It runs that **if no external force influences the body, angular momentum, or in other words, moment of momentum of a body, remains constant all the time**.

Thus, let us formulate the essence of the law of conservation of angular momentum. Mathematical expression of this law is as follows: $\bar{h} = mr^2\bar{\omega} = const$. What about it? You have recognized Planck's constant. The Nature has placed this law into this constant. It operates under the conditions of lack of external influence on a rotating body. If the rotation of the figure skater is considered, he experiences external influences. It is manifested as resistance created by air as well as in the form of friction forces influencing the skates of the figure skater. Thus, this law is manifested here not in its full value. Nevertheless, small resistance of the air and ice give us the possibility to see the manifestation of this law. Now let us consider the above-mentioned expression of Planck's constant $\bar{h} = mr^2\bar{\omega} = const$. Figure skater's mass m is not changed at the moment of rotation. But the distribution of this mass is changed. When he stretches his arms, they are moved away from the axis of his rotation, and moment of inertia mr^2 of the figure skater is increased, because the value, which is equal to arms' mass multiplied by the square of distances r^2 of their centers of masses from the axis of rotation is increased. The following fact is obvious: in order that Planck's constant h remains constant, rate of rotation of the figure skater ω should be reduced. As we have already mentioned, it takes place due to small value of external influence on it. When he places his arms nearer to the axis of his rotation, the value mr^2 is reduced, because the distance r is reduced. In order that the value h remains constant, a rate of rotation of the figure skater ω should be increased. It does take place. If there were no resistance, the figure skater could rotate eternally [40].

We are impressed by constancy of Planck's constant. It is confirmed by many calculations and many experimental data. It proves the fact that constancy of Planck's constant is governed by some fundamental law of the nature. Now we see that it is the law of conservation of angular momentum [75], [98], [99].

Above we showed how this law is demonstrated in behavior of photons of all frequencies, in behavior of the electrons during their transitions in the atoms and during formation of the molecules.

Above we showed how this law is manifested in behaviour of the photons of all frequencies, in behaviour of the electrons during their energy transitions in the atoms and during the formations of the molecules; now we'll show a number of examples of the manifestation of this law in the nature. It is clear that some of these examples are purely hypothetical; they should undergo a thorough check. Nevertheless, it is necessary to make them in order to attract the attentions of the investigators to the global role of the law of conservation of angular momentum.

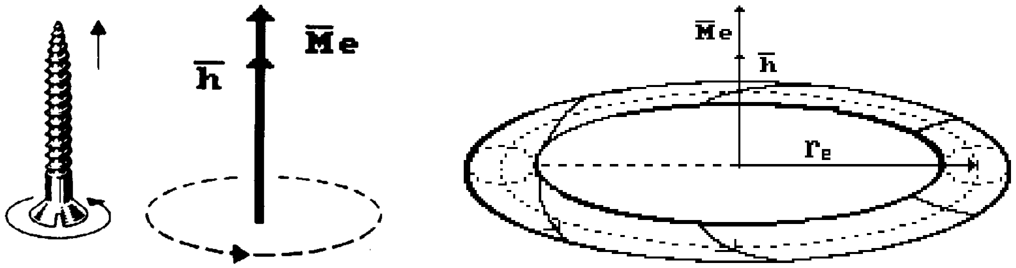

a) b)

Fig. 102. Directions of the vector of the Planck's constant $\overline{h}$ *and of the vector of magnetic moment* $\overline{M}_e$*, of the electron coincide with the direction of the right-hand movement*

As it is clear from Fig. 102,a the directions of the vector of angular momentum $\overline{h}$ (the Planck's constant) and the vector of magnetic moment $\overline{M}_e$ (Fig. 102, b) of the electron coincide and correspond to the right-hand rotation of the electron in relation to its axis. Let's call the electromagnetic field, which is formed by this combination of the direction of the vectors $\overline{h}$ and $\overline{M}_e$ the Planck's field. As this field is available near the electron, which is a connecting link between the atoms in the molecules, it should be manifested in the structure of the molecules. Then let us pay attention to the rules, according to which the direction of the vectors $\overline{h}$ and $\overline{M}_e$ is determined (Fig. 102,a,b). These vectors are directed in such a way that the electron rotates counterclockwise when if you look from above from their ends. Such rotation is called right-hand rotational, or right-hand one (Fig. 102, b).

The lack of the orbital movement of the electron in the atom is the nest important result. It is the consequence of the law of the formation of the spectra of the atoms and the ions. The interaction of the electrons with the atom nuclei can be considered, the hydrogen atom being an example.

Hydrogen is the simplest atom. It has one electron, and its nucleus consists of one proton. The information found out by us concerning the structure of the electron allows getting a notion about the formation process of this atom.

One can suppose that magnetic fields of both the proton and the electron are similar to magnetic fields of the bar magnets and have magnetic poles (Fig. 103). As proton mass is much greater than electron mass, the hydrogen mass formation will begin with the convergence of the electron to the proton. We know that in free state the electron has magnetic moment $\overline{M}_e$ and rather large magnetic field strength in its geometrical centre, that's why both electrical force and magnetic forces will govern the process of the convergence of the electron with the proton at the first stage.

As the magnetic fields of both the proton and the electron have the largest strength about their axes of rotation, the electron e and the proton P will rotate align during the convergence. If their opposite magnetic moments $\overline{M}_e$ and $\overline{M}_p$ are directed to meet each other, both the electrical forces and the magnetic ones will draw the electron and the proton together, and the proton will absorb the electron and will become a neutron. When the electron is drawn together with the proton and their like magnetic poles $\overline{M}_e$ and $\overline{M}_p$ are directed to meet each other, Coulomb's forces acting normally to toroidal surface of the electron will draw it together with the proton, and magnetic forces will repulse them from one another. An equilibrium will be set between these forces, and the structure being formed in such a way is the hydrogen atom (Fig. 103) [16], [20].

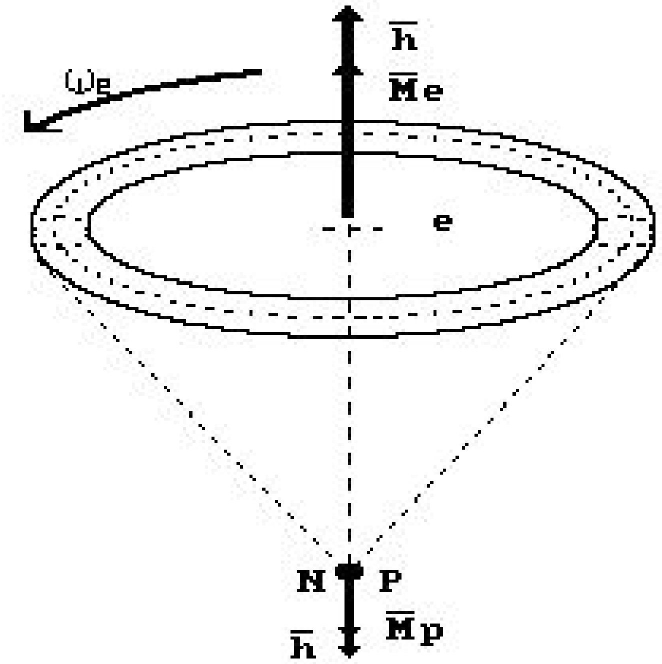

Fig. 103. Diagram of hydrogen atom model

Magnetic moment of the electron is by two order greater than the magnetic moment of the proton, that's why the right-handed Planck's field is formed round the hydrogen atom. As the hydrogen atom is a connecting link between the atoms of many molecules (hydrogen links), the right-handed electromagnetic fields should be formed in the area of the formation of these links, we have called these fields the Planck's fields. Let's consider it taking the formation of a hydrogen molecule as an example.

In accordance with the existing notions the hydrogen molecule can have two structures. In the structure of orthohydrogen the directions of vectors of magnetic moments of the protons are turned to one direction, and in the structure of parahydrogen to opposite directions (Fig. 104) [2].

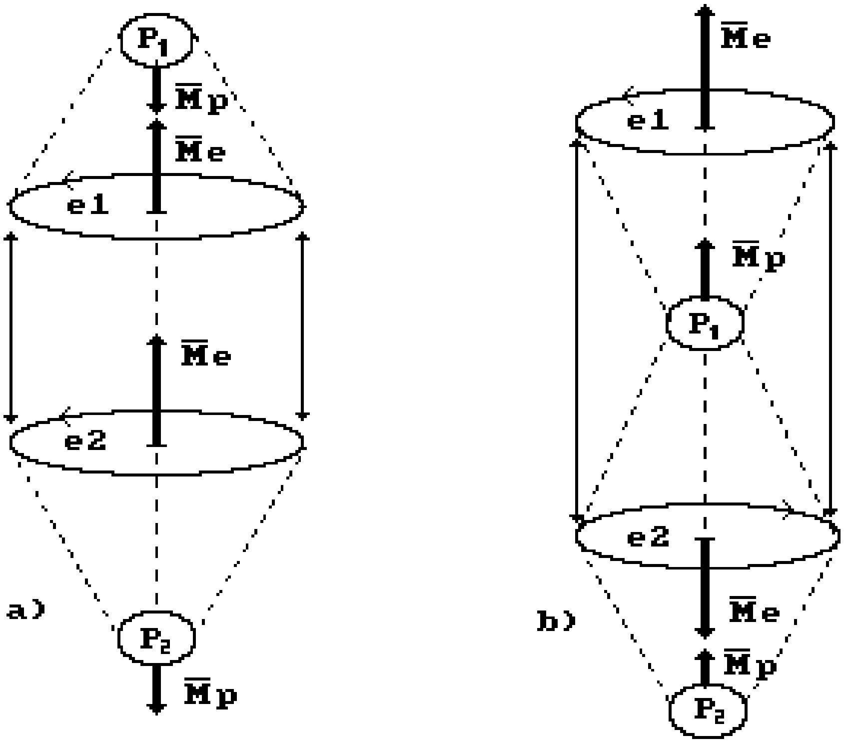

Fig. 104. Diagram of hydrogen molecule H_2 :
a) - orthohydrogen, b) – parahydrogen

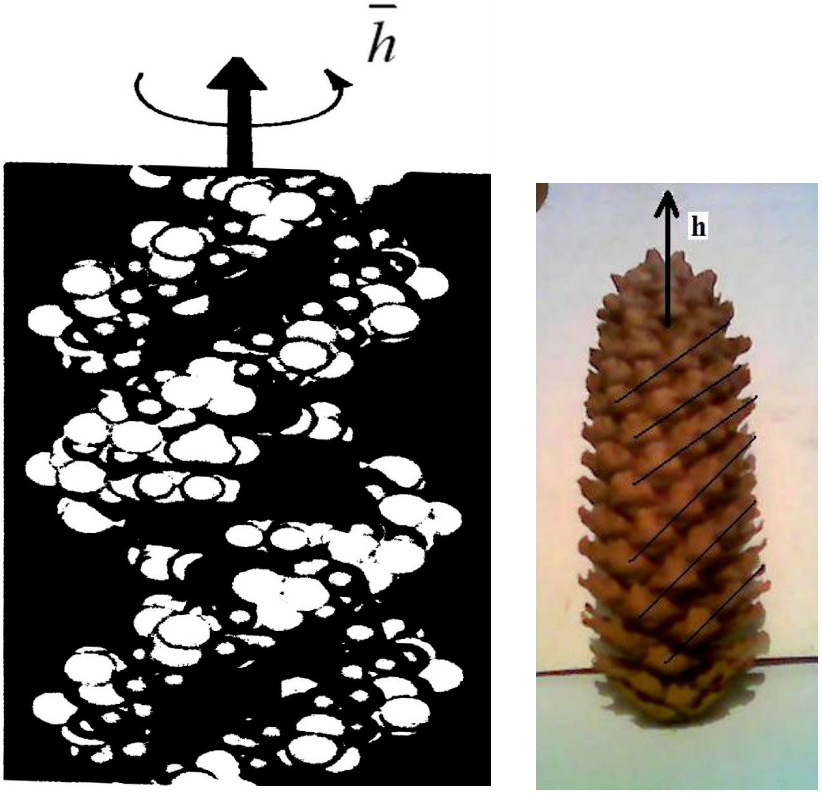

Fig. 105. Model of DNA double helix twisted by the Planck's filed to the right

Thus, the electrons acting as the right-handed electromagnetic gyroscopes unite the atoms into the molecules by their electromagnetic fields, which we have called the Planck's fields. The availability of the rotation process of the electrons gives the possibility to suppose that this process forms the right-handed Planck's field near the electron.

As the electron and the hydrogen atom are the main connecting links between the atoms in the molecules, their right-handed Planck's fields should influence this process. It is known that DNA molecule helix is twisted to the right (Fig. 105) [24].

We have every reason to believe that the direction of DNA helix twisting to the right is stipulated by the Planck's fields of the electrons and the hydrogen atoms, which mainly form the chemical bonds between the atoms of this molecule [24]. Thus, the direction of DNA helix twisting is connected with the rotation direction, which is characterized by the most fundamental law of the Nature – the law of conservation of angular momentum. The Nature has put the Planck's constant, the most fundamental constant, into this law.

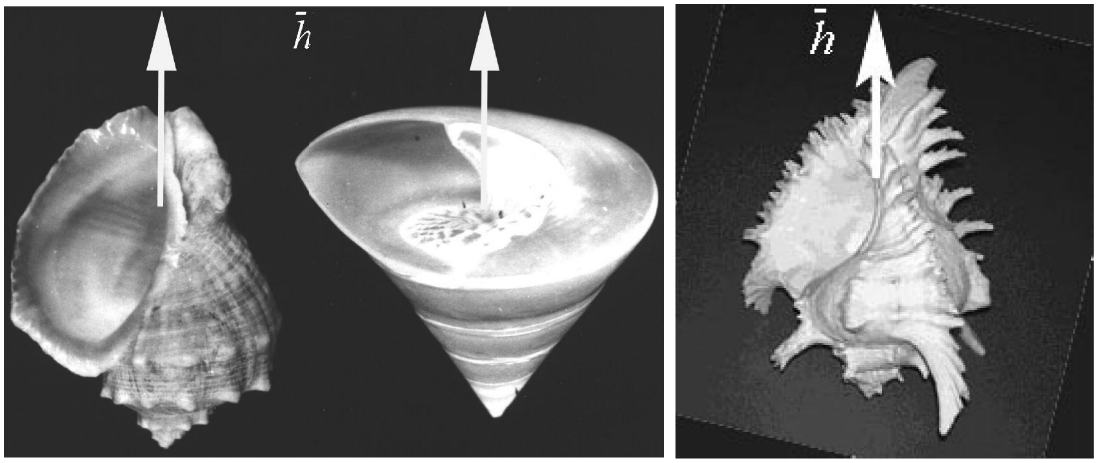

Fig. 106. Rotation direction of the Planck's field coincides with the direction of twisting of the majority of shells

Then let us pay attention to the fact that the majority of the shells (Fig. 106) of the mollusca[56] and snails is twisted to the right, and we have every reason to believe that this direction of the shell twisting is the sequence of the right-handed Planck's fields of the electrons and the hydrogen atoms. Obviously, this reason determines the prior development of the right-hand of a human being. A shell twisted to the left and a person – lefthander are the exceptions from this rule. But the influence of the Planck's field on various natural phenomena is not restricted by it.

---

[56] Americans spell it 'mollusks' (snails & family)

If the sum of all vectors of the spins $\bar{h}$ (the Planck's constants) of the electrons and the atoms of the Earth is added and designated with symbol $\overline{H}$ (Fig. 107), the sum of all vectors $\overline{H_i}$ directed to the center of the Earth will be not only equal to zero, but they compensate each other. Vectors $\overline{H_o}$ are directed oppositely, but a part of them remains uncompensated near the surface of the Earth. As a result, near the surface of the Earth the right-handed Planck's field should be formed, which determines the direction of shell twisting. How is it possible to discover the existence of such field? The simplest way is to weigh the rotating gyroscope.

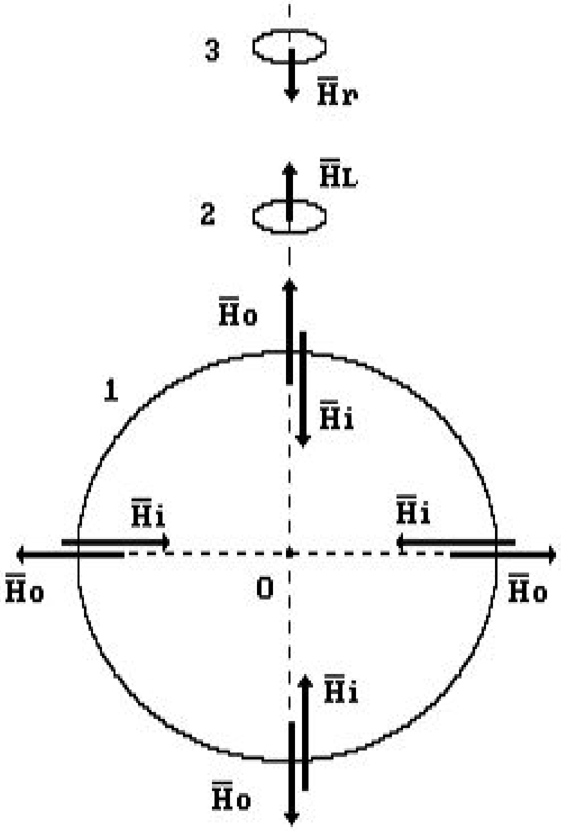

Fig. 107. Diagram of formation of non-compensated right-handed Planck's field on the surface of the Earth

If vector $\overline{H_r}$ of the rotating gyroscope 3 (Fig. 107) will be opposite to the direction of vector $\overline{H_o}$ near the earth surface, weak magnetic fields corresponding to the directions of these vectors will interact with their like magnetic poles and push them off from each other. It is registered during the experiment. Gravity influencing the right-handed gyroscope is less than gravity influencing the non-rotating one [100].

If the right-handed gyroscope falls on the surface of the Earth, the vector of its Planck's field $\overline{H}_r$ will be directed to the non-compensated vector of the Planck's field $\overline{H}_e$ near the surface of the Earth. The like poles of the magnetic fields being formed will be directed to each other. As a result, free fall acceleration of such a gyroscope should be reduced. This fact has been confirmed experimentally by Japanese scientist Hideo Haysaka [92].

It is natural to suppose that this phenomenon should be manifested in larger scale on the Earth and even in the space. There are the experimental results, which confirm the existence of the zones on the surface of the Earth, which have different magnetic field strength. The Russian scientists call them the torsion fields [92], [100]. It is natural that strength of such a field will be maximal in such zone of the surface of the Earth where the substance molecules are rather free to position their rotating Planck's fields in relation to the general Planck's field near the surface of the Earth. First of all, they are the zones of bedding of oil and gas. Such field is found in our galaxy. Vector $\overline{A}_r$, which characterizes this field, has been found by Russian scientist Yu. A. Baurov and his colleagues, and it has been called a cosmologic vector potential [93], [95], [96].

It is clear that we have given a brief description of a chain of natural phenomena where the influence of angular momentum is demonstrated. This coincidence is not an accidental one, that's why it should be studied thoroughly. Above on we showed how the law of conservation of angular momentum is implemented during the formation of electromagnetic structures of the photons and the electrons as well as the atoms and the molecules.

Conclusion

Thus, incompleteness of the existing axiomatics of exact sciences is the main hindrance to fruitfulness of theoretical investigations. When we have widened and systematized it, we have opened the way for theoretical analysis of many details of the microworld, which have been inaccessible to modern theories. New axiomatics of exact sciences gives the investigators the new criteria for evaluation of safety of any theory. That's why it can be called axiomatics of natural sciences.

The list of axioms is headed by the most important axioms of natural sciences: space and time are absolute, space, matter and time are indivisible. Then the Euclidean mathematical axioms follow, which require additions.

Lorentz's transformations, the foundation of the theories of relativity by A. Einstein, contradict one of the main axioms of natural sciences: space - matter - time unity axiom, that's why it is unnecessary to search other evidences of flimsiness of these theories.

The second Einstein's postulate acquires more precise wording, which retains it to the framework of classical notions and opens the prospects of usefulness in the development of physical ideas.

The new model of the photon and the theory of its description confirm erroneousness of our many notions concerning the nature of electromagnetic radiation and the wrong interpretation of some astrophysical phenomena.

The models of the electron and the law of formation of the spectra of the atoms and the ions change our notions concerning the structure of the atoms and the molecules. The periodic law of chemical elements is added by periodicity of formation of the structure of the atomic nuclei. The process of transmutation of the atomic nuclei of chemical elements acquires vivid outlines. The important prerequisites of the control of this process are formed.

Chemists get a new instrument of cognition of the structure of the atoms, the ions and the molecules. The notions concerning the formation process of chemical bonds are simplified significantly, and the possibility of more exact calculation of their energy indices appears.

As the examples of implementation of the results of theoretical investigations, the energy processes during plasma water electrolysis in order to get additional energy are described.

Theoretically and experimentally the possibility of extraction of power from chemical bonds of water molecules has been demonstrated. It has been found that during the usual and plasma electrolysis of water electric power is converted to other types of energy with COP that is more than one. It has been proved that the fusion of the atoms and the molecules of hydrogen is a source of additional energy.

In the Russian market, three firms – Yusmar, Thermovikhr and Noteka – sell cavitation equipment for water heating with the energy effectiveness index up to 150%.

The first understanding of the processes, which take place at this time, has become possible due to a new theoretical direction in the description of the physical and chemical processes. The experimental results and their analysis serve as one of the indices of fruitfulness of this direction, which remains unknown to a wide range of the specialists. There is every reason to believe that power significance of the problems being analysed will promote critical analysis of the new theoretical ideas of the author.

References

1. V.A. Atsyukovsky. Logical and experimental principles of theory of relativity. M.: publishing house of MPI. 1990.
2. L. Poling. General chemistry. M.: Mir, 1974.
3. Quantum metrology and fundamental constants. Collection of articles. M.: Mir. 1981.
4. Ph.M. Kanarev. Problem tasks of mechanics. Krasnodar. 1983.
5. A.R. Striganova, G.A. Odintsova. Tables of spectral lines. M.: Nauka. 1977.
6. M. Kline. Mathematics. Loss of Definiteness. M.: Mir. 1984.
7. Ph. M. Kanarev. Do You Keep on Believing? Or Have You Decided to Check? Krasnodar. 1992. 63 pages.
8. Ph.M. Kanarev. New Analysis of Fundamental Problems of Quantum Mechanics. Krasnodar. 1990. 173 pages.
9. A.A. Nikitin, Z.B. Rudzikas. Principles of the Theory of Spectra of the Atoms and the Ions. M.: Nauka. 1983.
10. V.V. Nikolsky, T.I. Nikolskaya. Electrodynamics and Wave Propagation. M.: Nauka. 1989.

11. Daniel H. Deutsch, Ph.D. Reinterpreting Plank's Constant. Galilean Electrodynamics. Vol. 1, № 6, pp 76-79 (Nov/Dec., 1990).
12. Ph. M. Kanarev. The Role of Space and Time in Scientific Perception of the World. Galilean Electrodynamics. Vol. 3, № 6, pp. 106-109 (Nov./Dec., 1992)
13. Ph.M. Kanarev. The Crisis of the Fundamental Sciences. Krasnodar, 1993. 46 pages. (In English)
14. Beckmann P. Sagnac and Gravitation. Galilean electrodynamics. Vol. 3, № 1, pp. 9-12. (January/February, 1992).
15. Spaniol G. And Sutton J.F. Classical Electron Mass and Fields. Journal of Physics Essays. Vol. 5, № 1, pp. 60-61, 1992.
16. Ya.G. Klyushin. Foundations of Modern Electrodynamics. St.-Petersburg, Russia, 1999, 74 pages.
17. Ph. M. Kanarev. A New Analysis of Compton Effect. Krasnodar, 1994. 25 pages. (In English).
18. Ph.M. Kanarev. On the Way to the Physics of the 21st Century. Krasnodar. 1995. 269 pages (In English).
19. Howard C. Hayden, Cynhia K. Whitney, Ph.D., Schafer W.J. If Sagnac and Michelson-Gale. Why not Michelson-Morley? Galilean Electrodynamics. Vol. 1. № 6, pp. 71-75 (Nov./Dec. 1990)
20. David L. Bergman, Ph. D. And J. Paul Wesley, Ph.D. Spining Charged Ring Model of Electron Yielding Anomalous Magnetic Moment. Galilean Electrodynamics. Vol. 1, № 5, pp. 63067. (Sept./Oct., 1990)
21. Walter Kranzer. So interessant Physic. Berlin. 1990.
22. Thomas G. Barnes. Physics of the Future: a Classical Unification of Physics. Institute for Creation Research. El Cajon, California. 1983, 208 pages.
23. Patent № 5,372,688: System for Electrolysis of Liquid Electrolyte. "Cold Fusion" Issue № 7, pp. 3-13. USA
24. E.V. Shpolsky. Atomic Physics. Volume 1. M.: 1963. 575 pages.
25. A.N. Zaidel et al. Tables of Spectral Lines. M.: Nauka, 1997.
26. Ph.M. Kanarev. Analysis of Fundamental Problems of Modern Physics. Krasnodar. 1993. 255 pages.
27. T. Erden-Grus. Matter Structure Principles. M.: Mir, 1976. 487 pages.
28. J.A. Becklemeshev, G.J. Becklemesheva. A New Director in the Energetics. New Ideas in Natural Sciences. St.-Pertersburg. 1996, pp 311-313.
29. G.K. Grebenshchikov. Helicity and Spin of the Electron. Hydrogen Atom Model. Energoatomisdat. St.-Petersburg 1994. 60 pp.
30. Milo Wolff. Exploring the Physics of the Unknown Universe. New York. 1990. 251Pag.
31. A.B. Frankfurt, A.M. Foek. At the Cradle of Quantum Theory. M.: Nauka, 1975.
32. A.T. Pilipenko, P.Ya. Pochinok et al. Reference Book on Elementary Chemistry. Kiev. "Naukova Dumka", 1977, 538 pages.
33. Ph.M. Kanarev. Law of Formation of the Spectra of the Atoms and Ions. Proceedings of the international conference "Problems of space, time, gravitation". St.-Petersburg. Publishing house "Polytechnic", 1997, pp. 30-37.
34. Cl. E. Suorts. Unusual Physics of Usual Phenomena. Volume 2. M.: "Nauka", 1987.
35. T.I. Hill. Modern Theory of Cognition. M.: Progress, 1965. 530 pages
36. M. Freemantle. Chemistry in Action. Volume I. M.: "Mir", 1991. 528 pages.
37. M. Freemantle. Chemistry in Action. Volume II. M.: "Mir", 1991. 620 pages.
38. Development of Teaching on Valence. Under editing of B.I. Kuznetsov. M. "Chemistry", 177. 247 pages.
39. A.I. Mishchenko. Use of Hydrogen for Car Purposes. Kiev. "Naukova Dumka", 1984. 140 pages.
40. D.A. Bezglasny. Law of Conservation of Angular Momentum during Formation of the Solar System. Proceedings of the international conference "Problem of space, time, gravitation". St.-Petersburg. Publishing house "Polytechnic", 1997, pp. 118-122.
41. Arthur C. Clark. 2002: The Coming Age of Hydrogen Power. "Infinite Energy". Volume 4, Issue 22. pp 15-16.
42. E.N. Ramsden. Principles of Modern Chemistry. Leningrad "Chemistry", 1989, 784 pages.
43. M.Ya. Vygodsky. Analytical Geometry. M.: The state publishing house of physical and mathematical literature. 1963. 528 pages.
44. Reference Book of the Recommended Terms. Issue 90. Theoretical Mechanics. Terminology. M., "Nauka", 1977, 45 pages.
45. Reference Book on Classical Mechanics. In five languages. Warsaw, 1965. 192 pages.
46. V.V. Polevoi. Physiology of Plants. M.: Vyshaya Shkola, 1989.
47. Zommerfeld. Modern State of Atomic Physics. (In the reference book of E. Shredinger. New ways in physics. M.: Nauka, 1971).
48. I.P. Stakhanov. Physical Nature of the Ball Lightning. M.: Atonizdat. 1979, 240 pages.

49. A.B. Goldstein, F. Z. Serebryansky. Operation of Electrolysis Plants for Producing Hydrogen and Oxygen. M. Energia, 1969.

50. Mallove E. Do-It-Yourself Cold Fusion Experiment Boiled Lightning from Japan, with Love by Eugene Mallove. Infinite Energy, 1988, Volume 4, Issue 20, 1989, pp 9-13.

51. Ohmori and Mizuno. Strong excess Energy Evolution, New Element Production and Electromagnetic Wave and/or Neutron Emission in Light Water Electrolysis with a Tungsten Cathode. Infinite Energy. 1988. V. 4, Issue 20, pp 14-17.

52. Short Chemical Encyclopaedia. Volume 1. M.: Sovetskaya Entsiclopedia. 1961.

53. Ph. M. Kanarev. The Analytical Theory of Spectroscopy. Krasnodar, 1993. 88 pages.

54. T. Braun, G.Yu. Lemey. Chemistry in the Centre of Sciences. Volume 1. M.: Mir. 1983, 448 pages.

55. T. Braun, G.Yu. Lemey. Chemistry in the Centre of Sciences. Volume 2. M.: Mir. 1983, 520 pages.

56. Bilan et avenir du “systeme” hydrogene. Pt. 1. Production transport et stockade/Logette S., Leclere, J.-P., Goff P. Le, Villermau. J.//Entropie. 1995. № 188-189. pp 95-99.

57. Future’s fuel be solar hydrogen/Fabri Laszlo// Period. Polytechn. Mech. Eng. 1996. 40, № 2, pp 77-84.

58. V.V. Sinyukov. Water known and unknown. M., Znanie, 1987. 174 pages.

59. Paramahamsa. Tewari. Violation of Law of Conservation of Charge in Space Power Generation Phenomenon. The Journal of Borderland Research, USA. Vol. XLV, № 5. September - October, 1989.

60. I.M. Kustanovich. Spectral Analysis. M.: Vyshaya Shkola, 1967. 390 pages.

61. N.G. Bakhshiev. Introduction in Molecular Spectroscopy. Leningrad. Publishing House of the Leningrad University,1987. 211 pp.

62. Spectral Analysis of Pure Substances. Under editing of Ch. I. Zilberstein. St.-Petersburg, 1994. 336 pages.

63. V.P. Polishchuk. How to Discern a Molecule. M.: “Chemistry”, 1979. 380 pages.

64. Santilli R.M. Physical Laws of the Emerging New Energies as Predicted by Hadronic Mechanics, I: Insufficiencies of Quantum Mechanics. Infinite Energy. 1998. V. 4, Issue, pp 33-49.

65. Ph.M. Kanarev. Protocol of Control Experiments for the Plasma-Electrolysis Reactor. № 3. Infinite Energy. 1998. V. 4, pp. 31-32.

66. Ph.M. Kanarev. The Secret of “Cold Fusion”. Proceedings of the International Scientific Conference of New Ideas in natural Sciences. Part I. “Problems of Modern Physics”, St.-Petersburg, June 17-22, 1996, pp. 305-310 (in English).

67. Harold L. Fox. Cold Nuclear Fusion: Essence, Problems, Influence of the World. View from USA. Production group “SVITAX” M.: 1993, 180 pages.

68. Ph.M. Kanarev. Crisis of Theoretical Physics. The first edition. Krasnodar, 1996. 143 pages.

69. Ph.M. Kanarev. Crisis of Theoretical Physics. The second edition. Krasnodar, 1997. 170 pages. {http://www.guns.connect.fi/innoplaza/energy/story/Kanarev/index.html#book2}

70. Ph.M. Kanarev. Crisis of Theoretical Physics. The third edition. Krasnodar, 1998. 200 pages.

71. E.D. Zykov, F.V. Babenchik, Yu.A. Beklamishev, S.D. Likhonosov, V.V. Semushkin, A.A. Polushin. Method of Purification and Disinfection of Solution and the Device for its Implementation. Author’s certificate SU 1624924 A1. Claim № 4257400/26, registered on June 3, 1987. Description of the invention of the 6th collection of VNIIPI of the State Committee on Inventions and Discoveries at SCNE of the USSR.

72. Ph.M. Kanarev. The Source of Excess Energy from Water, Infinite Energy. V. 5, Issue 25. pp 52-58.

73. ICCF - 7 ACCEPTED ABSTRACTS. Infinite Energy. V. 4, Issue 20, p. 59-69.

74. Ya.B. Skuratnik, N.I. Khokhlov, A.K. Pokrovsky. Estimation of Possibility of Excess Energy during Water Electrolysis with Usual and Heavy Water. Cold transmutation of Nuclei. Proceedings of the 6th Russian Conference on cold transmutation of chemical elements. M., 1999. Pages 91-98.

75. Ph.M. Kanarev. Water as a New Energy Source. The third edition. Krasnodar, 2001, 200 pages (in English).

76. Ph.M. Kanarev. Introduction in Hydrogen Power. Krasnodar, 1999. 22 pages.

77. Yu.N. Bazhutov, G.M. Vershakov, R.N. Kuzmin, A.M. Frolov. Interpretation of Cold Nuclear Fusion with the help of Catalysis of Erzions. Collection “Physics of Plasma and Some Questions of General Physics”, CNIIMash, 1990, 67-70.

78. Soo Seddon. Fuel Cell Conference Report. Institute of International Research Conference on Fuel Cell Vehicles. Held on February 22, 1999. Infinite Energy Issue 25, 1999, pp 35-38.

79. V.S. Lavrus. Sources of Energy. K.: Nit, 1997. 112 pages. (http://yandex.ru/yandbtm).

80. P.K. Rashevsky. Rieman Geometry and Tensor Analysis. M: Nauka, 1967, 664 pages.

81. Kanarev Ph. M. Lecture for Participants of the European Congress on New Hydrogen Technologies and Space Drives. Krasnodar, 2001, 39 pages.

82. Future of Science. M.: 1979, 64 pages
83. Edmund Storms. A Critical Evalution of the Pons-Fleschmann Effect: Part 1. Infinite Energy Vol. 6, Issue 31, 2000. Pag. 10-20.
84. V.A. Ashokovsky, General Ether Dynamics. M. Energoizdat, 1990.
85. Ph.M. Kanarev. Device for Production of Thermal Energy, Hydrogen and Oxygen. Patent № 2157427
86. Ph.M. Kanarev, V.V. Podobedov. Device for Production of Thermal Energy and Steam-Gas Mixture. Patent № 2157862
87. Ph.M. Kanarev, E.D. Zykov, V.V. Podobedov. Device for Production of Thermal Energy of Hydrogen and Oxygen. Patent № 2157861.
88. Richerd H. Wachsman. The Quirks and Quarks of Physics and Physicists. "Infinite Energy". Volume 4, Issue 22. pp 22-25.
89. O. Struve, B, Linds, E. Pillans. Elementary Sstronomy. M. "Nauka", 1967. 483 pages.
90. A.D. Chernin. Stars and Physics. M. "Nauka", 1984, 159 pages
91. V.L. Ginsburg. On Physics and Astrophysics. M. "Nauka", 1985, 400 pages
92. Hideo Hayasaka. Generation of Anti-Gravity and Complete Parity Breaking of Gravity. Galilean Electrodynamics. . Vol. 11, Special Issues 1. 2000, pag. 12 – 17.
93. A.A. Shpitalnaya, Yu. A. Zakoldaev, A.A. Efremov. Astronomic and geological aspect of the new interaction. Problems of space, time, gravitation. Polotekhnika. St. Petersburg, 1997. P. 382÷393
94. I.I. Smulsky "Theory of Interaction". Novossibirsk, 1999, 300 pages
95. Yu. A. Baurov. On Physical Space Structure and New Interaction in Nature. New Ideas in Natural Sciences. Part 1. Physics. St. -Perrsburg 1996. pp. 45 - 60.
96. Yu. A. Baurov. Space Magnetic Anisotropy and New Interaction in Nature. Physics Letters A 181 (1993) 283-288. Horth Holland.
97. Kanarev Ph.M. Model of the Electron. "Apeiron" V. 7, no. 3-4, 2000. Pag. 184-193.
98. Kanarev Ph. M. Water is a Source of Energy. Deutsche Vereinigung fur Raum-Energie. Mitgliedr-Journal. Aussendung Nr. 44. Pag.170-184.
99. Ph.M. Kanarev. Water is a New Source of Energy. The second edition. Krasnodar, 2000. 153 pages
100. Labeysh V.G. Experiments on Asymmetrical Mechanics. Galilean Electrodynamics. Vol. 11, Ussues 1. 2000, c 8-11.
101. Ph.M. Kanarev, I.I. Artemov, S.A. Zelensky. Syllabus of Lectures on Theoretical Mechanics. Krasnodar, 2001, 265 pages
102. M. Jammer. The Conceptual Development of Quantum Mechanics. M.: Nauka, 1985. 380 pages.
103. A.I. Koldomasov. Nuclear Fusion in Electrical Charge Field. Fundamental problems of natural science and engineering. Volume 1. St.-Petersburg, 2000. 167 pages
104. Ya.A. Smorodinsky. Temperature. M. "Nauka", 1981, 159 pages
105. V.S. Edelman. Near Absolute Zero. M. "Nauka", 1983, 174 pages
106. Allan Holden. What is FTT? M.: Mir, 1979.
107. Thomas G. Lang. Proposed Unified Field Theory - Part I: Spatial fluid, Photons and Electrons. Galilean Electrodynamics. Vol. 11, N 3. 2000, pp. 43 - 48.
108. M. Planck. Selected Works. M.: Nauka, 1975. 788 pages.
109. Ph.M. Kanarev. Water is a New Source of Energy. The third edition. Krasnodar, 2001. 200 pages
110. Yu.M. Ageev. To Theory of Equilibrium Emission. - 1. Fundamental problems of knowledge of nature and engineering. Volume 1. St.-Petersburg, 2000. pp 15-17.
111. R. Sprole. Modern Physics. Quantum Physics of Atoms of Solid Body and Nuclei. M.: Nauka, 1974. 591 pages
112. Yu.M. Ageev. To Theory of Equilibrium Emission. -II. Proceedings of the Kuban State Agrarian University. Issue 382 (410). Krasnodar, 2000. pp 442-450.
113. Euclid. Euclid's Elements. Books I-VI. M-L: 1948. 446 pages.
114. Isaac Newton. Mathematical principles of Natural Philosophy. M.: Nauka, 1987. 687
115. Ph. M. Kanarev. The Gravitational Radius of a Black Hole. Journal of Theoretics. Vol. 4 -1. http://www.journaloftheoretics.com
116. Ph. M. Kanarev. Modelling the Photon and Analyzing Its Electromagnetic and Physical Nature. Vol. 4-1. http://www.journaloftheoretics.com
117. M.P. Bronstein Atoms and Electrons. M.: Nauka, 1980. 150 pages
118. J.B. Marion. Physics and Physical Universe. M. "Mir" 1975, 623 pag.

119. A.A. Sasanov. Minkovsky's four-dimensional world. M.: Nauka, 1988. 222 pages
120. A.V. Obrezha. Structure of Atomic Nuclei. Krasnodar, 2001. 95 pages
121. Ph.M. Kanarev. Models of Atomic Nuclei. Krasnodar, 2002. 23 pages
122. E. Vikhman. Quantum Physics. M.: Nauka, 1977.
123. S.R. de Grott, L.G. Sattorp. Electrodynamics. M.: Nauka, 1982. 560 pages
124. I.S. Shklovsky. Universe, Life, Mind. M.: Nauka, 365 pages
125. Ph.M. Kanarev. Model of Photon – Carrier of Energy and Information. Fundamental problems of science of nature and engineering. St.-Petersburg: 201, pages 332-349.
126. R. Kippenkhan. 100 milliard suns. Birth, life and death of stars. M.: Mir, 1990. 290 pages.
127. http://Kanarev.innoplaza.net
128. Ya. Bakelman. Higher geometry. M., Prosveshchenie, 1967. 367 pages
129. Ph.M. Kanarev, V.V. Konarev, V.V. Podobedov, A.B. Garmashov. Device for production of thermal energy, hydrogen and oxygen. Patent № 2175027.
130. L.I. Urutskoev, V.I. Liksonov, V.G. Tsinoev. Experimental Detection of "Strange" Emission and Transmutation of Chemical Elements. Journal of Radioelectronics № 3, 2000.
131. L. Brilluen. New Attitude to Theory of Relativity. M.: Mir, 1972.
132. D.I. Blokhintsev. Space and Time in Microworld. M.: Nauka, 1982.
133. F.A. Berezin, M.A. Shubin. Schroedinger Equation. M.: MGU publishing house, 1983.
134. P.A. Dirac. The Ways of Physics. M.: Energoizdat, 1983.
135. V.N. Dubrovsky, Ya.A. Smorodinsky, E.L. Surkov. The Relativistic World. M.: Nauka, 1984
136. Etori Nambu. The Quarks. M.: Mir, 1984.
137. A.I. Kitaygorodsky. The Electrons. M.: Nauka, 1979.
138. A.I. Kitaygorodsky. The Photons and the Nuclei. M.: Nauka, 1979.
139. B.V. Klain. Physicists and Quantum Theory. M.: Atomisdat, 1971.
140. G.N. Kopylov. Just so kinematics. M.: Nauka, 1981.
141. F. Crowford. The Waves. M.: Nauka, 1976.
142. V. Craigie. The world as seen by modern physics. M.: Mir, 1984.
143. R. Feiman. Character of Physical Laws. M.: Nauka, 1987. 160 pages
144. N.M. Livetsev. Course of Physics. M.: Vyshaya shkola, 1978.
145. A.A. Logunov. Lectures on Theory of Relativity and Gravitation. M.: MGU publishing house, 1985.
146. A.N. Matveev. Mechanics and Theory of Relativity. M.: Vyshaya shkola, 1976.
147. G. Minkovsky. Space and Time. Principle of Relativity. Collection of works on special theory of relativity. M.: Atomizdat, 1973. pp 167-180.
148. J.B. Marion. Physics and Physical World. M.: Mir, 1975.
149. A.I. Panchenko. Logical and Gnoseological Problems of Quantum Physics.
150. L.I. Ponomarev. Under the Sign of Quantumm: Sovetskaya Rossia, 1984.
151. T. Rege. Essays on the Universe. M.: Mir, 1985
152. B. Robertson. Modern Physics in Applied Sciences. M.: Mir, 1985.
153. B.N. Rodimov. Autooscillating Quantum Mechanics. Tomsk. The Tomsk University publishing house, 1976.
154. V.I. Rydnik. To See the Invisible. M.: Energoizdat, 1981.
155. Very-high-speed pulses. /Edited by S. Shapiro. M.: Mir, 1981.
156. A.Ch. Taugham, V. Hipper. Light Rays interact at a Distance //Priroda, 1978, № 1.
157. Fayman, Layton, Sands. Fayman's Lectures on Physics. Emission, Waves, Quanta. M.: Mir, 1985.
158. S.R. Filonovich. The largest Speed. M.: Nauka, 1983.
159. Von Neuman. Mathematical Principles of Quantum Mechanics. M.: Nauka, 1964.
160. L.A. Shipitsin. Hydrodynamical Interpretation of Electrodynamics and Quantum Mechanics. M.: 1978.
161. A. Einstein. On the Electrodynamics of Moving Bodies. Collection of works on special theory of relativity. M.: Atomizdar, 1973.
162. A. Denisov. Myths of Theory of Relativity. Vilnus, 1989.
163. P.R. Amnuel. The Sky in X-Rays. M.: Nauka, 1984.
164. V. Haitler. Elementary Quantum Physics. M.: the State publishing house of foreign literature, 1948.
165. G.S. Voronov. Assault of the Thermonuclear Castle. M.: Nauka, 1985.

166. L.E. Gurevich, A.D. Chernin. Origin of Galaxies and Stars.M.: Nauka, 1983.
167. George F. Berch. Oscillations of the Atomic Nuclei. //In the world of nature, 1980, № 7, pp 16-28.
168. I.V. Dmitriev. The Electron due to the Opinion of a Chemist. L.: Khimia, 1983.
169. A.K. Timiryazev. Physics, Part 2. M.: 1926.
170. Haim Harari. Structure of Quarks and Leptons. //In the world of nature, 1983, № 6, pp 30-43.
171. M. Klain. Mathematics. Search of the Truth. M.: Mir, 1988.
172. P.S. Kudryavtsev. Isaac Newton. M.: Uchpedgiz, 1943.
173. Yarovsky, A.A. Pinsky. Principles of Physics. M.: Nauka, 1981
174. Pobedonostsev L/A/ Experimental Investigation of the Dopler Effect. Galilean Electrodynamics. Vol. 3, no. 2. pp. 33-35 (March - April 1992).
175. Kanarev Ph.M. The Law of the Radiation of the Perfect Blackbody is the Law of Classical Physics. Journal of Theoretics. Vol. 4-2. 2002. http://www.journaloftheoretics.com
176. Kanarev Ph.M. F Model for the Free Electron. Galilean Electrodynamics. Volumes 13, Special Issues 1. Spring 2002. pp. 15-18.
177. Physical Encyclopedical Dictionary. Sovetskaya Entsiklopedia. M.: 1984
178. 178 Macarthur D.W., Butterfield K.B., Clark D.A., Donahue J.B. and Gram P.A.M., Brgant H.C., Smith W.W. and Comtet G. Test of the Special Relativistic Doppler Formula at . Physical Review Letters. Vol. 56, no. 4, 1986. pp. 282-285.
179. 179 A.D. Chernin. Stars and Physics. M.: Nauka, 1984, 160 pages.
180. 178. Kanarev Ph.M. The Gravitational Radius of a Black Hole. Journal of Theoretics. Vol. 4-1.
181. 179. Kanarev Ph.M. Modeling the Photon and Analyzing Its Electromagnetic and Physical Nature. Journal of Theoretics. Vol. 4-1.
182. 180. M. Fleischmann, S. Pons and M. Hawkins. Electrochemically Induced Nuclear Fusion of Deiterium. J. Electroanal. Chem. 261, 301 (1989).
183. Ph.M. Kanarev. The Law of Conservation of Angular Momentum. Vol. 4 -4. http://www.journaloftheoretics.com
184. Ph.M. Kanarev. Electrons in Atoms. Vol. 4 -4. http://www.journaloftheoretics.com
185. Kenneth R. Shoulders, “Method of and Apparatus for Production and Manipulations of High Density Charge”, US Patent 5,054,046, issued Oct 1, 1991.
186. Ken Shoulders & Steve Shoulders, “Observations on the Role of Charge Clusters in Nuclear Cluster Reactions”, J. of New Energy, vol. 1, no 3, pp 111-121, Fall 1996, 7 refs, 22 figs.
187. Hal Fox, Robert W. Bass, & Shang-Xian Jin, “Plasma-Injected Transmutation”, J. of New Energy, vol. 1, no 3, Fall 1996, pp 222-230, 23 refs, 4 figs.
188. Shang-Xian Jin & Hal Fox, “High Density Charge Cluster Collective Ion Accelerator,” J. of New Energy, vol. 4, no 2, Fall 1999, pp 96-104, 47 refs, 4 figs., 3 tables.
189. Ph.M. Kanarev. Water is the Main Power Carrier of Future Power Engineering. Journal of New Energy. An International Journal of New Energy Systems. Vol. 6, №2, pp. 101-121.
190. V. Kuligin. K. Kuligina. M, Korneva. Has Wave Equation not a Single Solution? Nauka i Tekhnika. Current publications, 2002. http://www.n-t.ru/
191. Kanarev Ph.M. Models of the Atomic Nuclei. Journal of Theoretics. Comprehensive Theory Articles. http://www.journaloftheoretics.com
192. Kanarev Ph.M. Planck’s Constant and the Model of the Electron. Journal of Theoretics. Comprehensive Theory Articles. http://www.journaloftheoretics.com
193. http://Kanarev.innoplaza.net
194. L. B. Boldyreva, N.B. Sotina. The Possibility of Developing a Theory of Light Without Special Relativity. “Galilean Electrodynamics”. Volume13, Number 6. Pp. 103-107.
195. V.V. Lunin, M.P. Popovich, S.N. Tkachenko. Physical chemistry of ozone. M. Publishing house of the Moscow University.1998. 475 pages.
196. Ph.M. Kanarev. The Foundation of Physchemistry of Micro World. The First edition. Krasnodar. 2002. Page 320.

FULL RESOURCES for KANAREV’S WATERFUEL THEORY
http://guns.connect.fi/innoplaza/energy/story/Kanarev/

Chapter 10.

THEORY: Sir Anthony Griffin — Stanley Meyer's Waterfuel Cell

Who was Sir Anthony Griffin?

Sir Anthony Templer Frederick Griffith Griffin (1920-1996) was a regular executive officer in the Royal Navy for 42 years, with responsibility for the development and construction of all new surface ships, submarines, aircraft and weapons.

Joined the Royal Navy in 1934, in World War II served on board the SS Britannia when she was sunk by a German raider. In 1964 he was given command of the aircraft carrier HMS Ark Royal (photo below) and in 1966 he took over as Naval Secretary. He was made Assistant Chief of the Naval Staff (Warfare) later in 1966, Second in Command of the Far East Fleet in 1968. In 1969 was made Flag Officer at Plymouth and Admiral Superintendent at Devonport. In 1971 he became Controller of the Navy and retired in 1975.

Retired from the Royal Navy in 1975 to become first Chairman of British Shipbuilders (1975-1980); also serves as President of the Royal Institution of Naval Architects (1981-1984), and Founding Member of the British Maritime League and the British Maritime Charitable Foundation (1982).

As you can see, Admiral Sir Anthony Griffin had a very high-level career and that's why his involvement in the Waterfuel industry is highly regarded. This chapter is an extract from his keynote lecture **"Water as Fuel"** as part of the subject "The impact of new technology on the marine industries" in the *International Maritime Conference* that was held in September 13-15, 1993, at The Warsash Campus, Southampton Institute, Warsash (UK). The complete proceedings of the conference can be found at http://trove.nla.gov.au/version/36477021

NOTE THE DATE – this lecture was given when Stanley Meyer was still alive and very active, with future projects and demonstrations indicated here by Sir Griffin. Meyer died (some say poisoned) on March 20, 1998.

"Water as Fuel" – Keynote Address #60, Vol.1

Abstract

The earth's main sources of non-solar energy are:

- ☐ Fossil fuels, which cause severe pollution and cannot last indefinitely,
- ☐ Nuclear, which is capital intensive, and whose waste disposal is problematical,
- ☐ Tidal and wind schemes which are inefficient, and
- ☐ Thermal and hydro installations which are efficient but lack flexibility and require major capital investment.

An alternative is water (salt, fresh or distilled) as a cheap and inexhaustible source of global energy which has none of the foregoing disadvantages. The theoretical evidence in support of the relevant technology is briefly described and related to the first and second laws of thermodynamics.

Practical evidence is illustrated and the impact of this revolutionary development on the marine industries, with ***ships floating on their own fuel*** and thus having no need for either bunkers or ambient air, is indicated. Much wider and global implications for the environment, industry, defense and political stability are discussed.

Introduction

In 1972, the Royal Navy examined how the Fleet should be fuelled when current fossil fuels become too scarce, say in the year 2030. They concluded that ***the fuel of the future was hydrogen*** but since the gas was not normally available in usable form, it would have to be extracted through either ***electrolysis of water*** or nuclear fusion. Neither appeared to be immediately practicable.

Electrolysis needed more power than that of the hydrogen it yielded and was too slow a process to meet the demands of an internal combustion engine. This meant that it would have to be stored in either liquid form or in a fuel cell, both of which involved substantial weight or safety problems. Nuclear fusion appeared to be too distant and expensive an alternative.

This position remains the current generally accepted view of hydrogen as a fuel. It has not however, deterred numerous investors from producing, for example, over 100 hydrogen fuelled cars in the USA, at least twelve in Germany and three in the UK. The latest is Japan's Mazda HRX car and its Wankel engine.

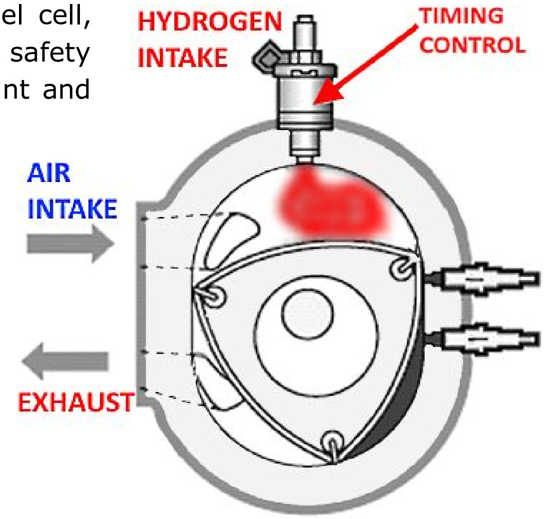

This car was described in June 1992 to the 9th World hydrogen Energy conference in Paris. Here the [news]papers referred only to various aspects of hydrogen generation through electrolysis, or its storage or its subsequent application. It is worth recalling that in April 1988, the starboard engine of a three-engined Tupolev 255 airliner was modified to run on hydrogen which was seen to be embarked in liquid form from a fuel bowser[57].

The aircraft flew for about twenty minutes on its hydrogen powered engine which showed no exhaust except a trail of water vapor. The main attraction in all of these cases has been the absence of pollution at the scene of action. However, ***the pollution problem has merely been transferred to the source of the power*** required to drive the electrolytic process.

Practical Demonstrations

Many practical demonstrations of Waterfuel Cell technology have already been made and more are planned. ***Most of Meyer's patents were filed under a particular clause of the US Patent Regulations which requires a claim to be demonstrated before it can be granted***.

The 1980 Patent

The first and probably the most frequently demonstrated patent is based on the actual equipment used in 1980 to support Meyer's claim for his hydrogen fracturing process. ***I have now personally witnessed it four times.*** In outline, the apparatus consists of nine concentric stainless steel cylinders, with about a 1 mm gap between them. They are 14 inches long and are effectively waveguides[58]. They are immersed in tap water contained in a glass vessel.

← Meyer's Waterfuel Cell replicated by Ravi Raju

The top of the vessel is normally gas tight but has a pressure gauge and a valve to allow gas to pass to atmosphere when required. Electrical power with opposite polarities is applied in pulses to the inner and outer cylinders and at a power of 10 watts, i.e. 5 volts at 2 amps. A considerable quantity of gas immediately accumulates in the top of the vessel and, within 10 seconds, reaches a pressure of about 10 psi.

---

[57] Tanker.

[58] Pipes that convey electromagnetic waves. They are to electromagnetism as are copper wires to electricity.

When the valve is opened, a jet of ***cold gas*** can be felt, but on this being lit with a match, the temperature instantly rises to about **3000°F** and the flame burns through a stainless steel wire in about 2 seconds. The glass vessel and its attachments ***remain at room temperature*** throughout, thus ruling out any normal electrolytic process.

Plainly, the generation of such a quantity of gas and its immediate application at such a high temperature, demands more than 10 watts of electrical energy. Furthermore, as the stainless steel cylinders have not noticeably been consumed over several years, the balance of the energy required can only come from the zero-point energy in the water.

Meyer points out that all the parameters involved in this demonstration have been deliberately de-optimised, e.g. 5 volts instead of 20,000 volts and 2 amps instead of 0.5 milliamp, 14 inch tubes instead of an optimum of 27 inch tubes, etc. in order to allow the principle of the water fracturing process to be demonstrated without risk of explosion.

EXPLOSIVE REPLICATION TIPS! *~Ozzie*

The 1985 Dune Buggy

In 1985, a dune buggy powered by a standard 1600-cc Volkswagen engine was modified through Waterfuel Cell technology to run on Waterfuel. It was a breadboard quality experiment which was successfully demonstrated as broadcast on American TV and reported in the press. ***A video tape record is held by London University.***

The 1993 Dune Buggy

This will be the first demonstration of a complete system, manufactured to a pre-production standard as a conversion kit for a typical car. The rig is designed for powers up to 400 hp and, in production, Meyer expects to market it for $1500. The date has yet to be settled, but is expected to be within the next 2 months in Ohio.

The Hyperdrive Portable Demonstrator

This project is under consideration as a convenient means of demonstrating how zero-point energy can impel water without any moving parts as shown below.

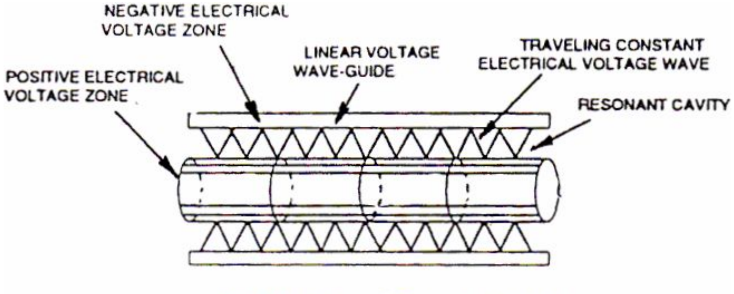

LINEAR CYLINDRICAL RESONANT CAVITY

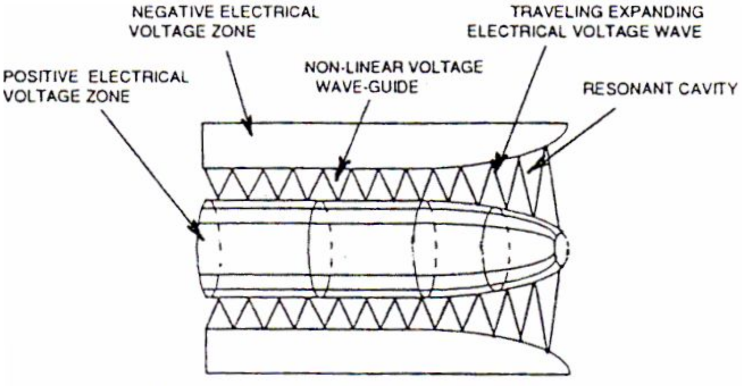

NON-LINEAR CYLINDRICAL RESONANT CAVITY

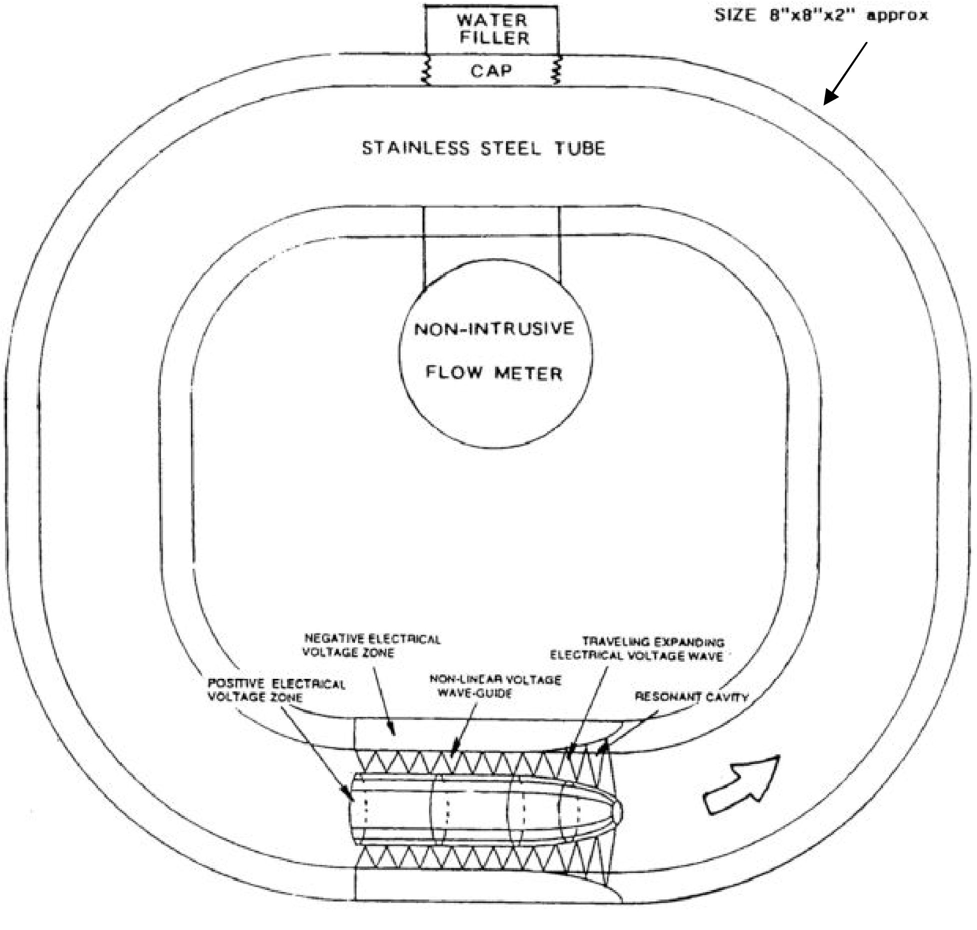

NON-LINEAR CYLINDRICAL RESONANT CAVITY

The Theory of Waterfuel Cell Technology

This begins with the basic structures of hydrogen and oxygen atoms and how they are combined in the water molecule:

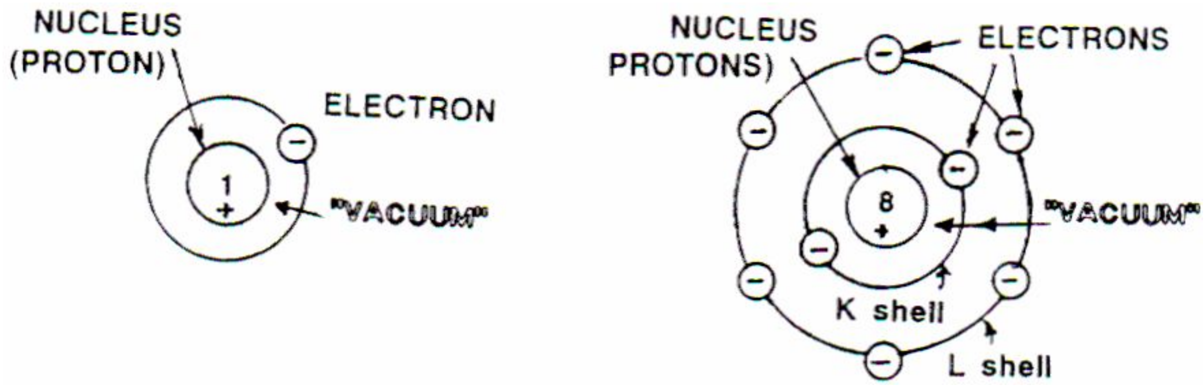

Note the orbital paths of the electrons and their 'shells'; the magnetic polarity of an electron and a nucleus; and the space occupied by the so-called "vacuum":

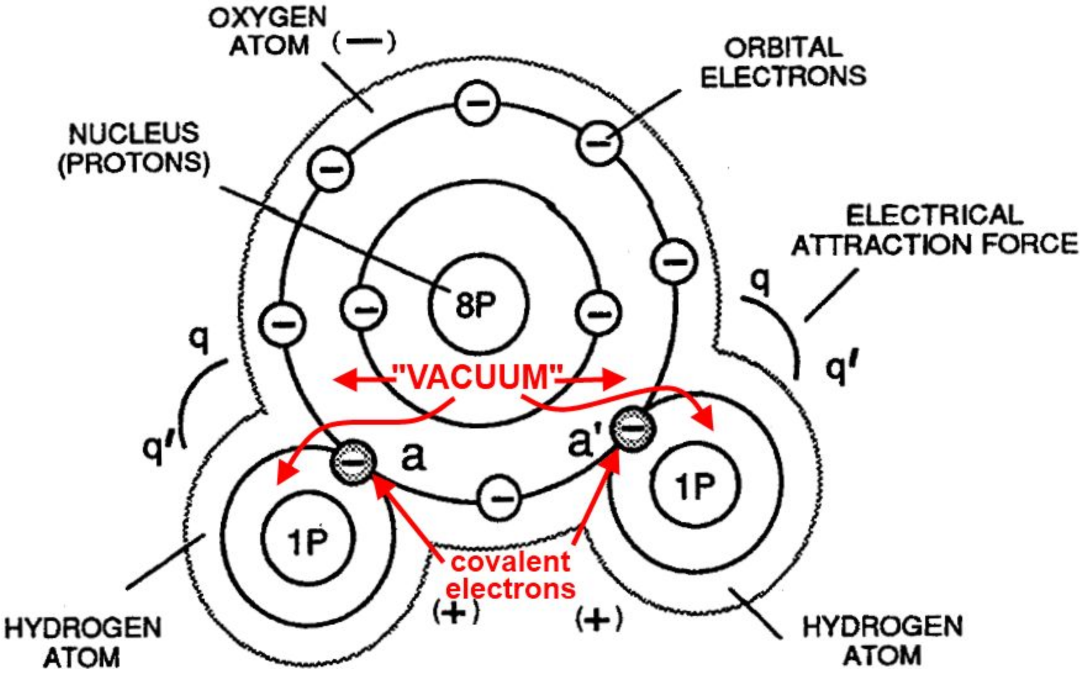

Note the presence of the two hydrogen electrons in the 'L' shell of the oxygen atom. These are known as the covalent electrons which are bonded in position by considerable electrical force. In the case of normal electrolysis, the energy needed to break these bonds and produce separate hydrogen and oxygen atoms from water, is roughly three times the energy of the hydrogen released. It is thus a highly inefficient process because of the considerable amount of waste heat which is generated.

The energy extracted from water by the Waterfuel Cell derives from two distinct, but virtually simultaneous processes. The first is the hydrogen fracturing process which dissociates the hydrogen gas from the water molecule. The second is the electron ionisation process which enhances the explosive energy of the gases released.

The Hydrogen Fracturing Process

The basis of this process is the subjection of the water molecule to very high voltage (20,000+ Volts) pulses at a particular frequency and within positively and negatively charged voltage zones at a very low current of less than 1 milliamp. ***The effect is to attract the negatively charged electrons towards the positive voltage zone and the positively charged nucleus towards the negative zone***[59].

The electron orbital path is changed from a circle to an ellipse and this, coupled with the effect of pulsing, causes such electrical stress on the molecule that the covalent bonds between the hydrogen and oxygen atoms are broken and the two gases separated.

Thereafter, they require substantial energy to be applied before they can be recombined. Because the current is so low, very little heat is generated. It is worth noting that, weight for weight, hydrogen contains about 2.5 times the energy of gasoline and the latent energy in the hydrogen content of a pint of water amounts to over 9 million joules, or enough to run a 1KW heater for 2.5 hours.

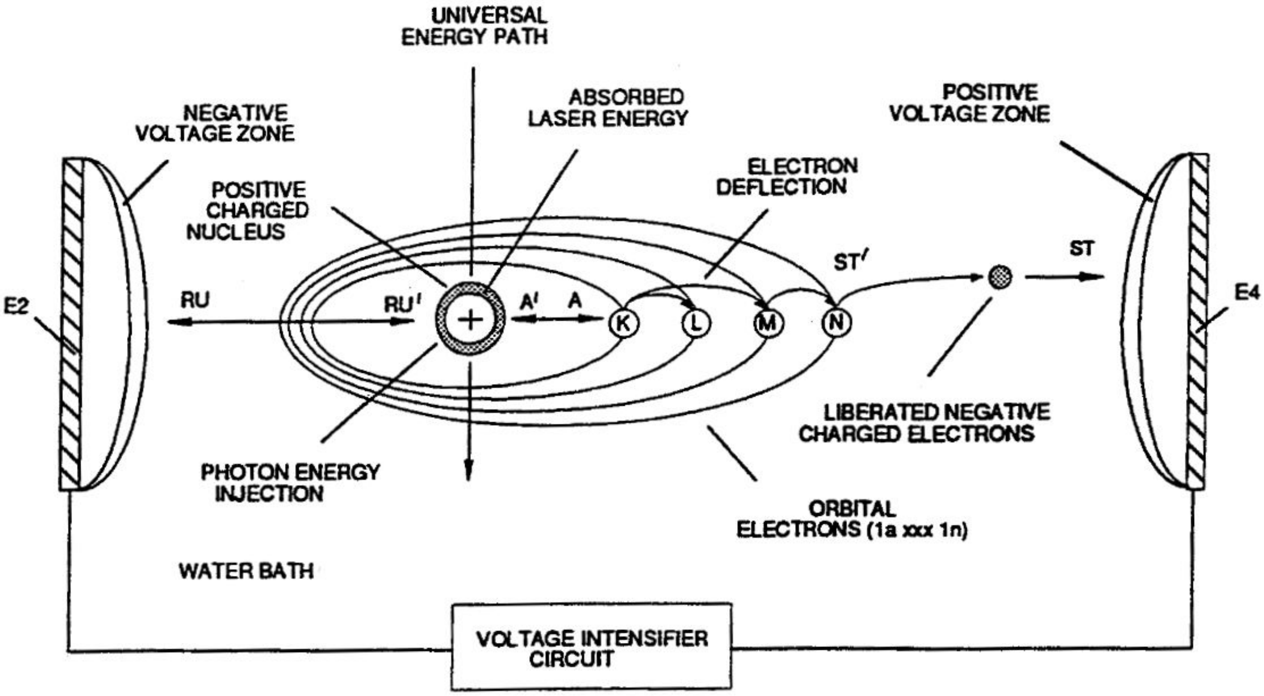

---

[59] Later he's going to refer to this as "electron pumping action."

Explosive Energy Enhancement

Two distinct questions arise over explosive energy enhancement:

- ☐ First, where does the additional energy come from?
- ☐ And second, how is it to be obtained and controlled?

The answer to the first question is the so-called "vacuum" within the electron shells. For many years this vacuum was regarded as a void. But **James Clerk Maxwell**[60] in his 'Treatise on Electricity and Magnetism' ***published in 1873,*** pointed out (vol. 2, pages 472-473) that ***the vacuum in fact contains a considerable amount of energy***. Subsequent work bears this out and it is now generally accepted that the vacuum is in fact seething with energy which has variously described as, for example, 'universal energy', 'gravity field energy', or 'zero-point energy'.

John Archibald Wheeler of Princeton University, a leading physicist who worked on the US atomic bomb project, has calculated that the flux density of zero-point energy is of the order of 10^{93} grams per cm^3. It is also recognised that the state of this so-called "sea of energy" is chaotic. Hence it needs to be "engineered" or made coherent before it can be translated from a microscopic to a macroscopic state. In other words, it requires special treatment before it can be tapped and controlled for normal external use.

Various answers, mostly theoretical, have been given to the second question. Recent examples include **Ilya Prigogine**'s book "Order Out of Chaos" which describes the work which won him the Nobel Prize for Chemistry in 1977, **Moray B. King**'s "Tapping the Zero-Point Energy", **Dr. J. Huber**'s paper "Phenomena of the Free-Energy in Nature and technology", **John Davidson**'s "The Secret of the Creative Vacuum" and, from the Kansas State University, **Gary L. Johnson**'s "Electrically Induced Explosions in Water". Some thirty supposedly practical devices have been made or suggested over the past 80 years, but although some have been demonstrated, none has been developed or engineered to a pre-production standard.

Meyer's Waterfuel Cell technology stands out as the only apparent exception. It has encountered deep skepticism but ***no argued rejection***. Indeed, an increasing number of scientists and engineers in the USA, Europe and Asia, accept the technology and are prepared to invest in it on the basis of current evidence. A practical demonstration is in fact due to take place within the next few weeks[61], based on a fully designed system, engineered to a pre-production standard and fitted to a running 'dune buggy'.

The technical basis for Meyer's extraction and control of zero-point energy lies mainly in the effect produced on an atomic nucleus by continuation of the same high voltage pulsing that causes the dissociation of the water molecule.

---

[60] James Clerk Maxwell (1831–1879) was a Scottish mathematical physicist. His most prominent achievement was to formulate a set of equations that describe electricity, magnetism, and optics as manifestations of the same phenomenon, namely the electromagnetic field.

[61] Reminder: Sir Griffin was saying this in mid-September, 1993.

The nucleus consists of one or more positively charged protons bound together with a number of neutrally charged neutrons. The electrical effect of the ***electron pumping action*** mentioned earlier causes an annulus[62] to appear in the middle of the nucleus. The zero-point energy is drawn through the annulus ***in a helical motion and in so doing, becomes coherent*** and hence a usable source of energy.

The voltage dictates the size of the annulus, and hence controls the energy obtained. Since the basic structure of the atom is retained, no alpha or gamma radiation occurs. The effect might be illustrated by a bath full of water. So long as the plug is in place, the water remains still and apparently powerless. However, when the plug is removed, the water swirls away with a helical motion down the plug hole and, under the influence of gravity, forms a powerful jet which can be directed to do work.

Meyer further stimulates the energy yield by injecting laser energy into the ionised water vapor. The energy enhancement system is shown in next two diagrams:

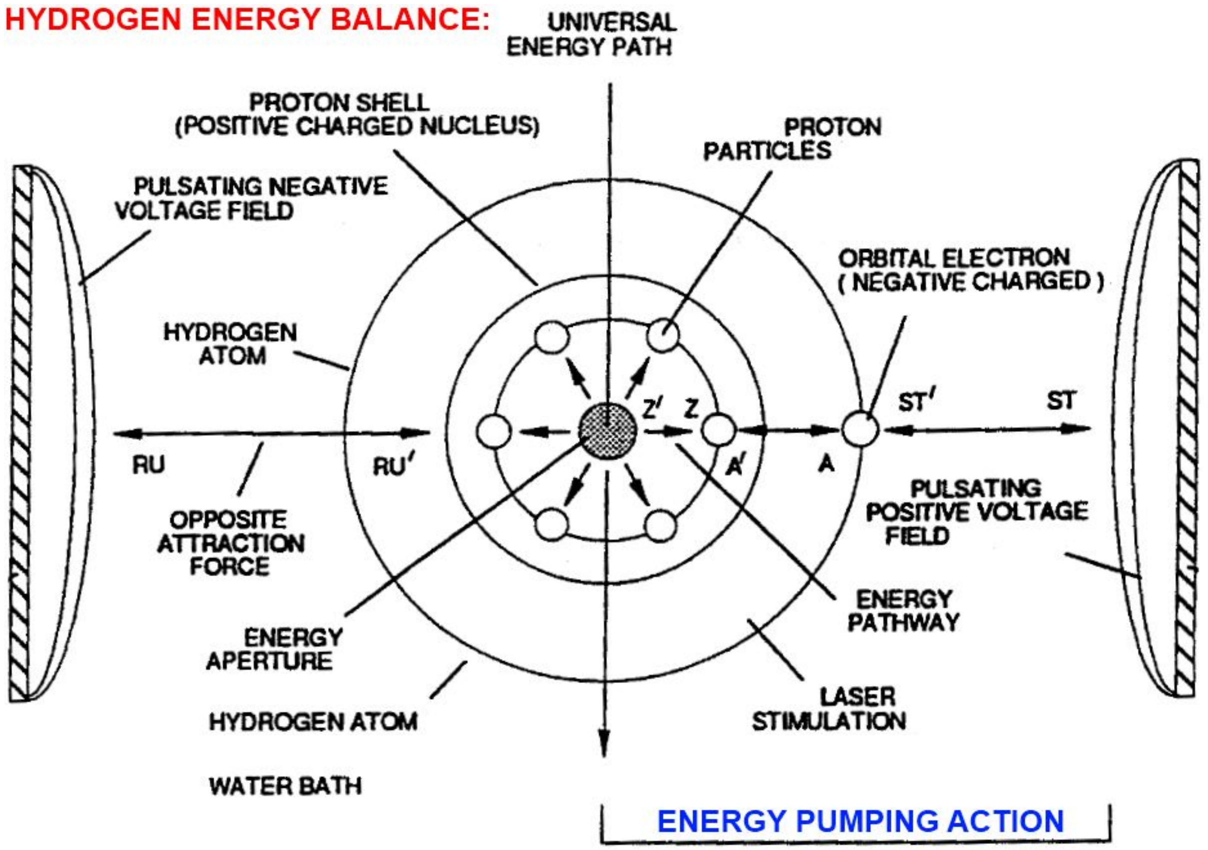

---

[62] A ring-shaped object, especially a region bounded by two concentric circles.

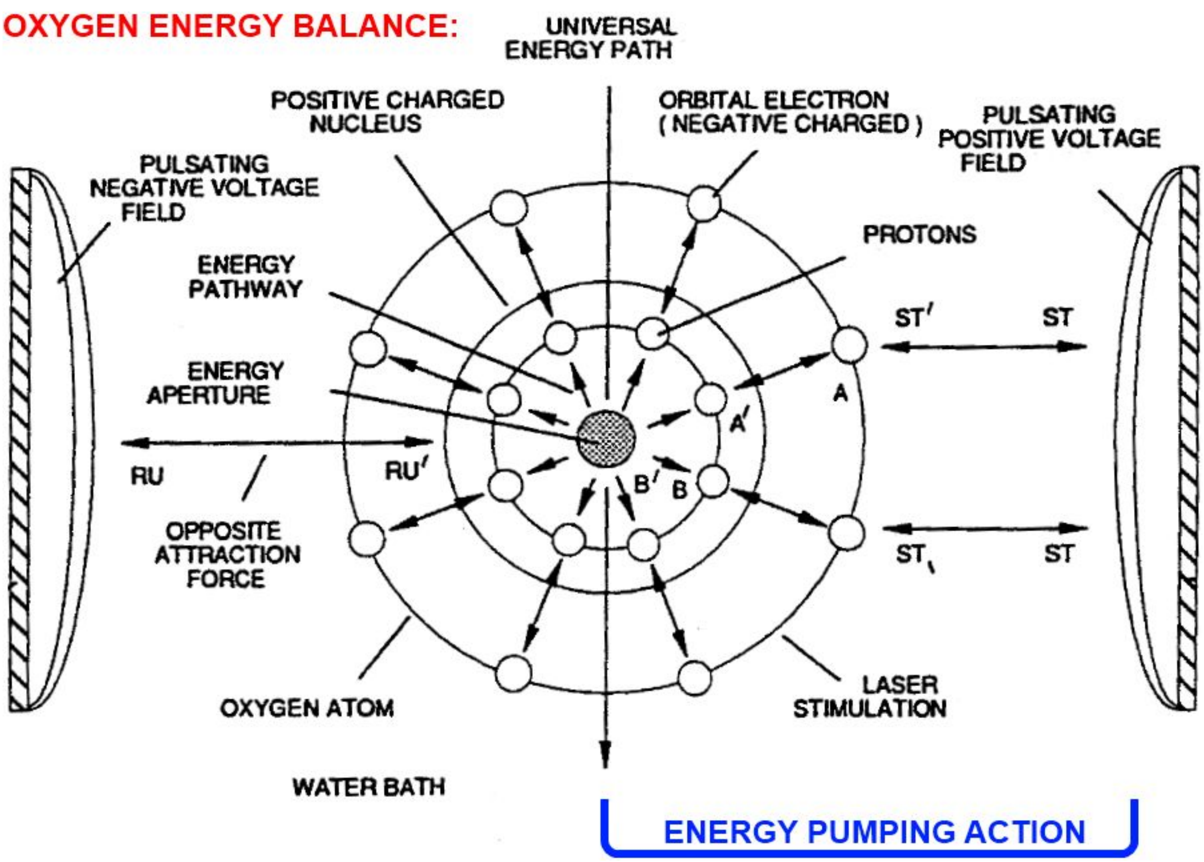

The hydrogen fracturing process and the energy enhancement of the gas occurs almost simultaneously within the ***fuel injector***. This, in an internal combustion petrol or Diesel engine, ***replaces an existing spark plug or Diesel fuel injector***, and the output is ignited by a high voltage pulse on entry into the cylinder. Consequently, the hydrogen does not have to be stored and the fuel tanks of land or air vehicles contain nothing but water. ***Vessels floating on water need no fuel tanks.*** The system is thus not only extremely safe, but also inexpensive. Meyer has quoted the in-production cost of a conversion kit for a 1600-cc Volkswagen engined car as $1,500.

The Waterfuel Cell and The First and Second Laws of Thermodynamics

The Waterfuel Cell technology encounters a credibility gap because it appears to run counter to the long established laws governing our interpretation of Nature. Some people therefore reject the Waterfuel Cell because it appears to be un-natural and just one more spurious claim for perpetual motion. In fact, the Waterfuel Cell is entirely natural. It merely demonstrates a new and revolutionary way of harnessing what nature has always had on offer. ***It does not infringe the two main laws of thermodynamics***, i.e.:

The First Law:

"The total energy of a thermodynamic system remains constant although it may be transformed from one form to another." In the case of Waterfuel Cell technology, the system is global. ***The energy required to drive the engine comes from the zero-point energy contained in the water, a virtually inexhaustible source. The exhaust from the engine is water vapor which returns to the atmosphere***.

The Second Law:

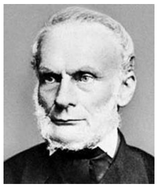

← Clausius

As originally formulated by R. Clausius[63] in 1865, this law states that "The entropy of the World strives towards a maximum". As recently formulated by Prigogine[64] and Stengers, this law *"contains two fundamental elements:*

(1) A negative one that expresses the impossibility of certain processes (e.g. heat flowing from a cold to a hot source), and

(2) A positive, constructive one.

It is the impossibility of certain processes that permits us to introduce a function, entropy, which increases uniformly and behaves as an attractor for isolated systems."

It is at maximum when the system is in equilibrium. Non-equilibrium is the source of order and brings order out of chaos. Since Waterfuel Cell technology postulates non-equilibrium, it can be said to be supported by the positive element of this Law.

The Vehicle System

The system starts with a normal 12v car battery and a tank full of water (salt, fresh or distilled). Under computer control, the Voltage Intensifier Circuit *[see diagram below]* is energised by the battery to generate high voltage pulses at a very low current, <1 milliamp, the voltage being responsive to the throttle. Simultaneously, water and ambient air are mixed into a water mist which is injected ***with laser energy*** and fed to each fuel injector.

---

[63] Rudolf Julius Emanuel Clausius (1822–1888) was a German physicist and mathematician and is considered one of the central founders of the science of thermodynamics.

[64] Ilya Romanovich Prigogine (1917–2003) was a Belgian-Jewish physical chemist and Nobel Laureate. Best known for his definition of dissipative structures and their role in thermodynamic systems far from equilibrium, a discovery that won him the Nobel Prize in Chemistry in 1977. In summary, Ilya Prigogine discovered that importation and dissipation of energy into chemical systems could reverse the maximization of entropy rule imposed by the second law of thermodynamics. Isabelle Stengers (1949--) is a Belgian philosopher who has co-authored several books with Prigogine, including 'Order out of Chaos.'

There it is subject to high voltage pulses which, virtually simultaneously, lead to the separation of the hydrogen and oxygen gases, and the explosive energy enhancement.

A special high voltage pulse, applied at the exit of the fuel injector, ignites the gases as they enter the cylinder. The system is outlined below:

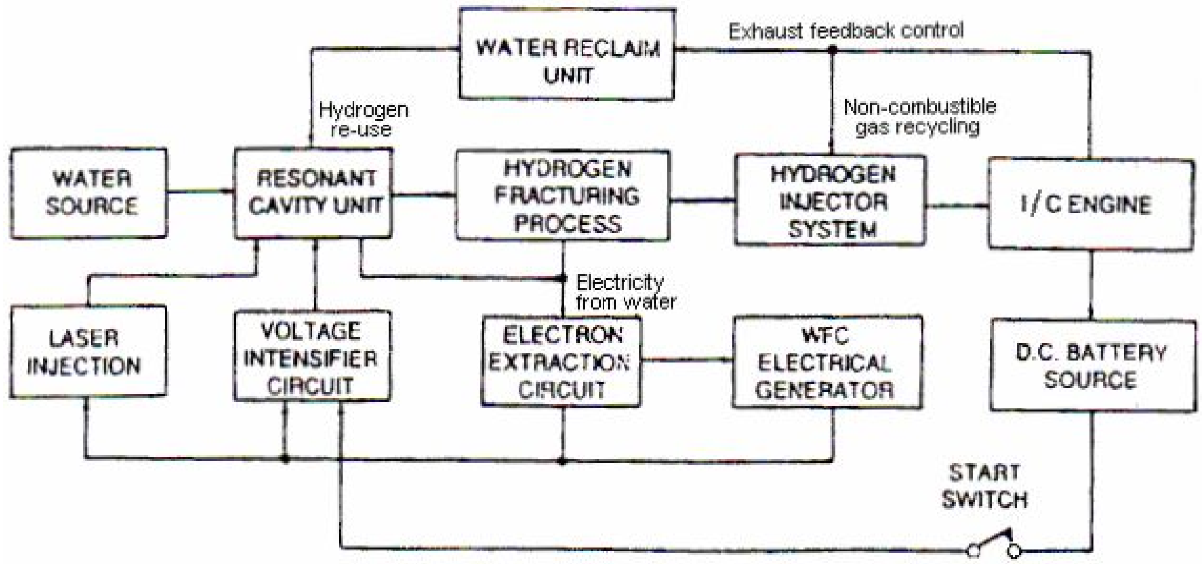

The Fuel Injector

A schematic diagram is shown below. This highly innovative development accounts for the compactness of the vehicle conversion kit. It replaces the 'resonant cavity unit' which formed a relatively bulky and expensive component of the system as originally designed.

It eliminates the need for a special hydrogen conduit between the cavity unit and the fuel injection system, and reduces the variety of such systems by allowing any adjustments to be made through a newly designed universal computer.

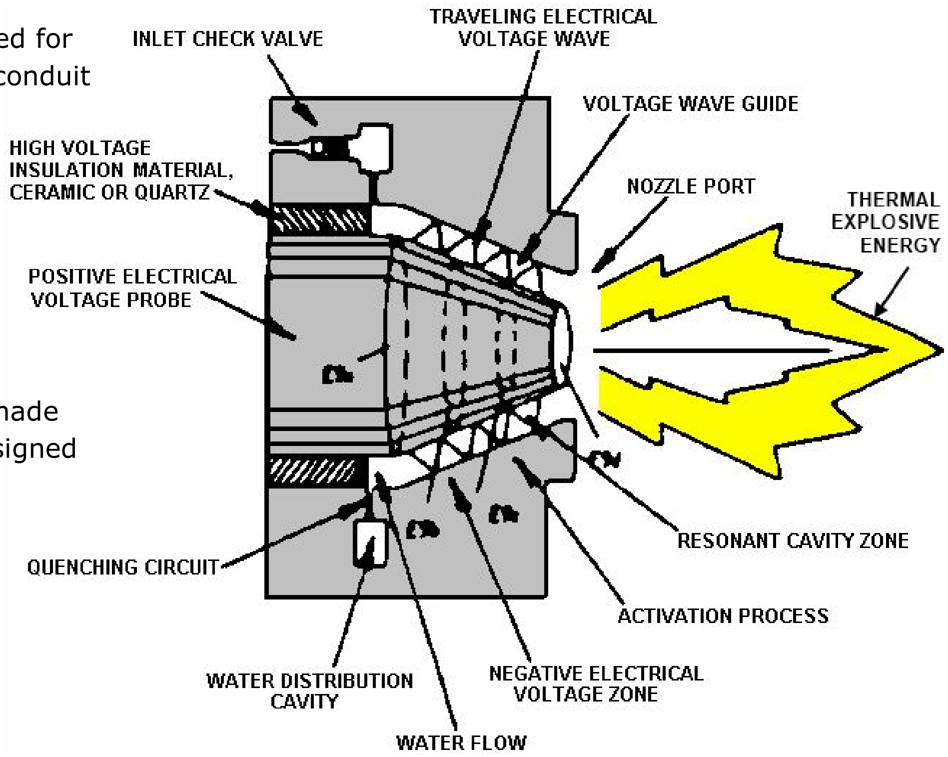

Applications

General

In its current state of development, which is to a pre-production standard of engineering, the Waterfuel Cell technology can provide a safe, economical and pollution free source of universal energy for all internal combustion petrol or Diesel engines of up to 400 horsepower. In addition, ***it can be readily adapted to gas turbines*** (both marine and aerial), to ***desalination*** plants, ***home heating*** boilers and industrial ***furnaces***.

A Dublin food processing company is now, with Irish Government support, manufacturing a ***Waterfuelled furnace*** under license from Meyer. When Waterfuel Cell technology reaches its full production stage, Meyer intends to market a range of conversion kits.

Given some conventional engineering development, Waterfuel Cell technology could be applied to very much higher powers, such as ***electricity generating plants*** (both fossil and nuclear fuelled), slow speed ***Diesels***, and ***space rockets***. In all these cases, energy would be in the form of hydrogen, obtained from the dissociation of water, coupled with zero-point energy itself through energy enhancement. Meanwhile, Meyer has a further development in hand which he calls "Hyperdrive."

Hyperdrive

This new development does not require the generation of hydrogen and its subsequent combustion. It applies the energy, made available electrically from high voltage pulsing of the zero-point energy field, directly to the generation of a water jet. It does not require an engine and has no moving parts. The power level is governed, as before, by the applied voltage. Direction is controlled by feeding the jet through maneuvering nozzles such as those fitted to the Harrier VTOL[65] aircraft and to space rockets. It is therefore of special significance to marine transport.

---END OF SIR GRIFFIN'S PRESENTATION---

Further Study:

- ✓ www.theorionproject.org/en/documents/Stan_Meyer_Full_Data.pdf (234 pages)
- ✓ http://www.youtube.com/watch?v=iaB5ME8kFGU (and related videos there)
- ✓ http://rwgresearch.com/open-projects/stanley-meyers-wfc-tec/patents-documents/

---

[65] VTOL: Vertical Take-Off and Landing.

Meyer Validated by British Scientists

January 1991: Team of Top Scientists – UK

According to Rex Research (http://rexresearch.com/meyerhy/meyerhy.htm#elworld), UK tech magazines *'Electronics World' and 'Wireless World'* of January 1991 ran a story about Stanley Meyer's highly successful demonstration before Professor Michael Laughton, Dean of Engineering at Mary College, London, Admiral Sir Anthony Griffin, a former controller of the British Navy, and Dr. Keith Hindley, a UK research chemist. The scientists were quoted to say the following:

"The most remarkable observation is that the WFC and all its metal pipework remained quite cold to the touch, even after more than twenty minutes of operation. The splitting mechanism clearly evolves little heat in sharp contrast to electrolysis where the electrolyte warms up quickly."

"The results appear to suggest efficient and controllable gas production that responds rapidly to demand and yet is safe in operation. We clearly saw how increasing and decreasing the voltage is used to control gas production. We saw how gas generation ceased and then began again instantly as the voltage driving circuit was switched off and then on again."

"After hours of discussion between ourselves, we concluded that Stan Meyer did appear to have discovered an entirely new method for splitting water which showed few of the characteristics of classical electrolysis. ***Confirmation that his devices actually do work come from his collection of granted US patents on various parts of the WFC system. Since they were granted under Section 101 by the US Patent Office, the hardware involved in the patents has been examined experimentally by US Patent Office experts and their seconded experts and all the claims have been established."***

"The basic WFC was ***subjected to three years of testing.*** *This raises the granted patents to the level of independent, critical, scientific and engineering confirmation that the devices actually perform as claimed."*

July 1993: Dublin Institute of Technology, Ireland

The following Meyer validation by Irish experts: Rea O'Neill, Industrial Liaison Officer of Dublin Institute of Technology, Noel Whitney, Director of Quantum Leap LTD and Michael Carberry, Chief Engineer of Avonmore PLC. Shown below are 2 of 14 pages; download the complete paper from Jean-Louis Naudin: http://jnaudin.free.fr/wfc/WFCexpl.pdf

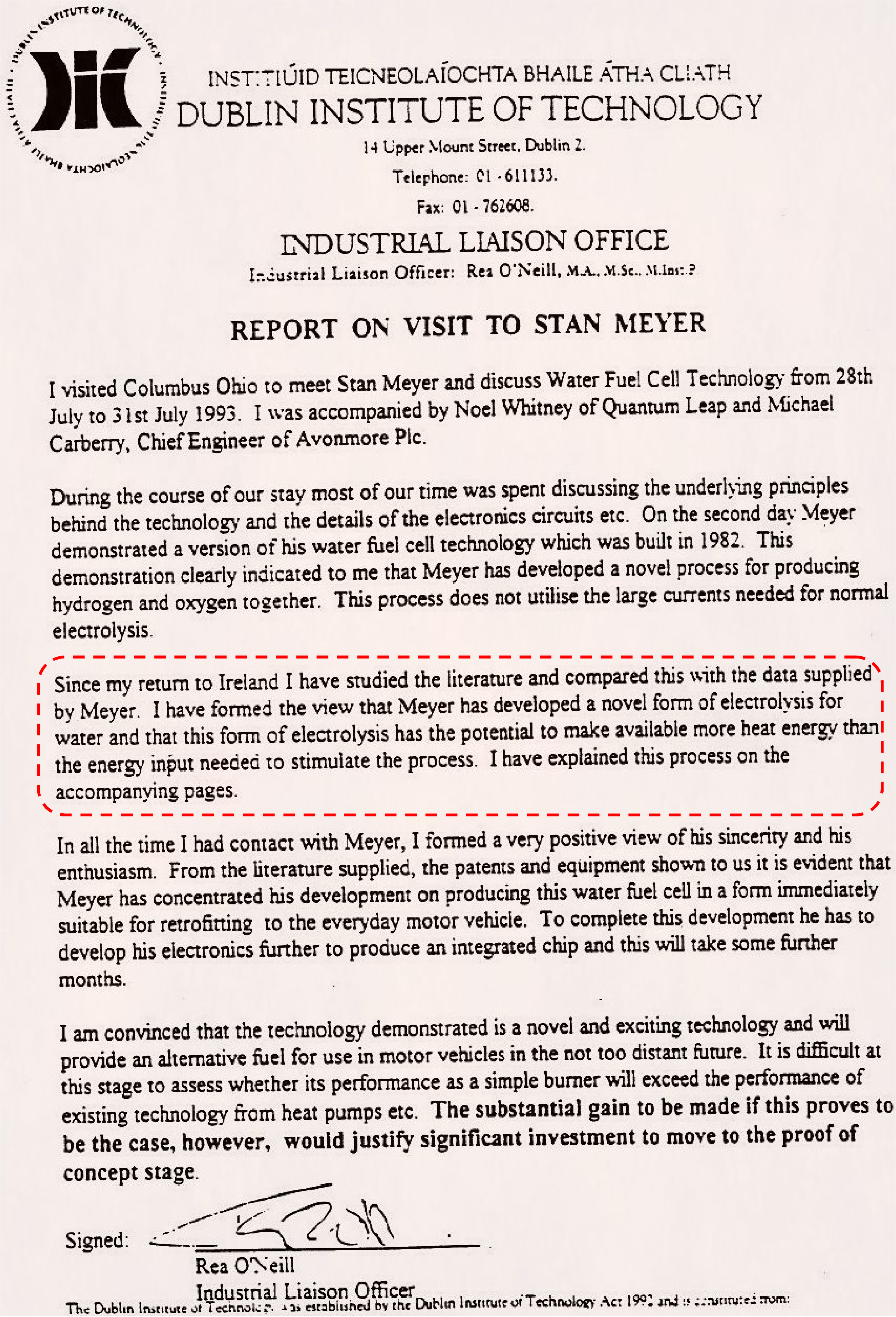

INSTITIÚID TEICNEOLAÍOCHTA BHAILE ÁTHA CLIATH
DUBLIN INSTITUTE OF TECHNOLOGY
14 Upper Mount Street, Dublin 2.
Telephone: 01 - 611133.
Fax: 01 - 762608.
INDUSTRIAL LIAISON OFFICE
Industrial Liaison Officer: Rea O'Neill, M.A., M.Sc., M.Inst.P

REPORT ON VISIT TO STAN MEYER

I visited Columbus Ohio to meet Stan Meyer and discuss Water Fuel Cell Technology from 28th July to 31st July 1993. I was accompanied by Noel Whitney of Quantum Leap and Michael Carberry, Chief Engineer of Avonmore Plc.

During the course of our stay most of our time was spent discussing the underlying principles behind the technology and the details of the electronics circuits etc. On the second day Meyer demonstrated a version of his water fuel cell technology which was built in 1982. This demonstration clearly indicated to me that Meyer has developed a novel process for producing hydrogen and oxygen together. This process does not utilise the large currents needed for normal electrolysis.

Since my return to Ireland I have studied the literature and compared this with the data supplied by Meyer. I have formed the view that Meyer has developed a novel form of electrolysis for water and that this form of electrolysis has the potential to make available more heat energy than the energy input needed to stimulate the process. I have explained this process on the accompanying pages.

In all the time I had contact with Meyer, I formed a very positive view of his sincerity and his enthusiasm. From the literature supplied, the patents and equipment shown to us it is evident that Meyer has concentrated his development on producing this water fuel cell in a form immediately suitable for retrofitting to the everyday motor vehicle. To complete this development he has to develop his electronics further to produce an integrated chip and this will take some further months.

I am convinced that the technology demonstrated is a novel and exciting technology and will provide an alternative fuel for use in motor vehicles in the not too distant future. It is difficult at this stage to assess whether its performance as a simple burner will exceed the performance of existing technology from heat pumps etc. **The substantial gain to be made if this proves to be the case, however, would justify significant investment to move to the proof of concept stage.**

Signed:

Rea O'Neill
Industrial Liaison Officer

The Dublin Institute of Technology was established by the Dublin Institute of Technology Act 1992 and is constituted from:

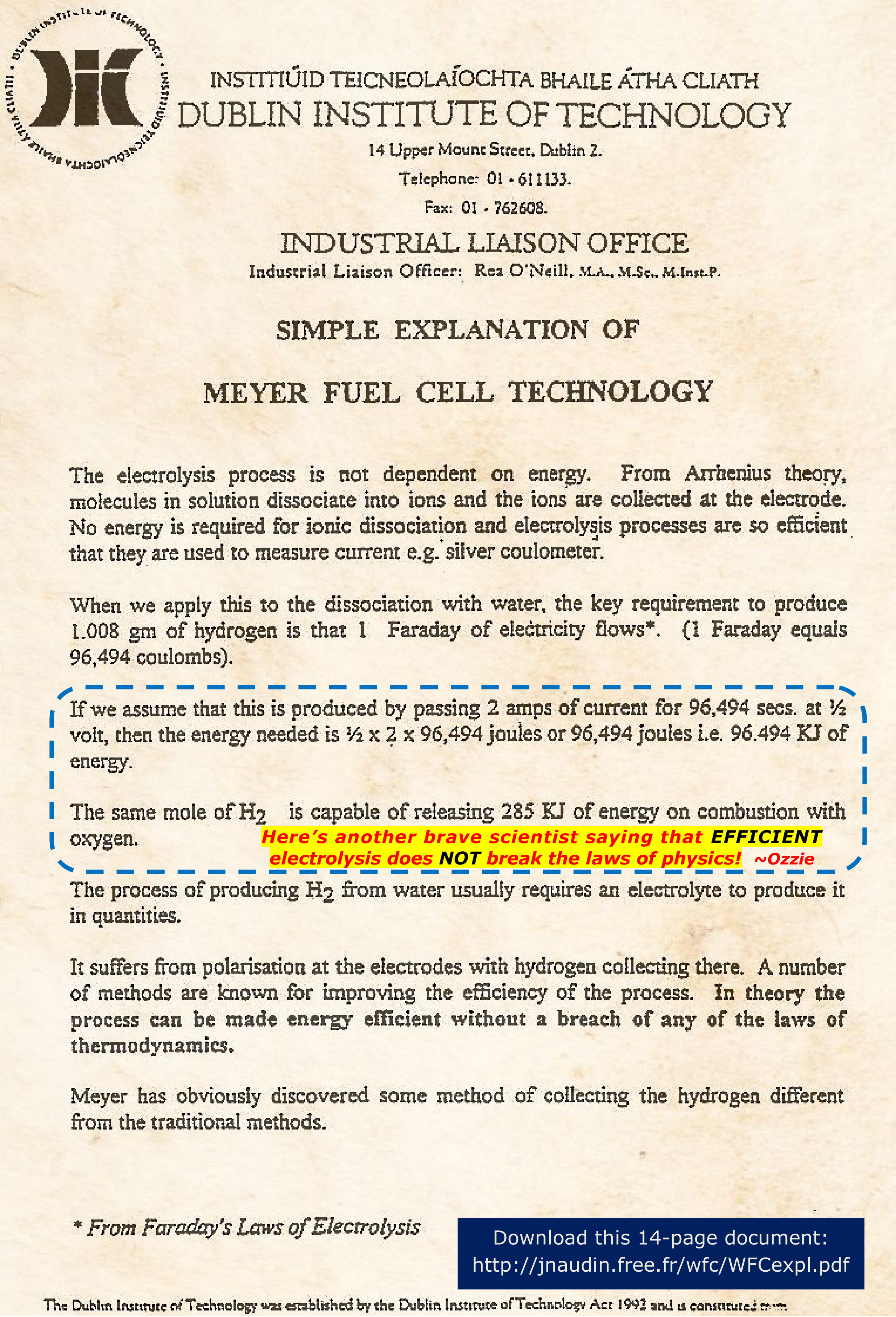

INSTITIÚID TEICNEOLAÍOCHTA BHAILE ÁTHA CLIATH
DUBLIN INSTITUTE OF TECHNOLOGY
14 Upper Mount Street, Dublin 2.
Telephone: 01 - 611133.
Fax: 01 - 762608.
INDUSTRIAL LIAISON OFFICE
Industrial Liaison Officer: Rea O'Neill, M.A., M.Sc., M.Inst.P.

SIMPLE EXPLANATION OF

MEYER FUEL CELL TECHNOLOGY

The electrolysis process is not dependent on energy. From Arrhenius theory, molecules in solution dissociate into ions and the ions are collected at the electrode. No energy is required for ionic dissociation and electrolysis processes are so efficient that they are used to measure current e.g. silver coulometer.

When we apply this to the dissociation with water, the key requirement to produce 1.008 gm of hydrogen is that 1 Faraday of electricity flows*. (1 Faraday equals 96,494 coulombs).

If we assume that this is produced by passing 2 amps of current for 96,494 secs. at ½ volt, then the energy needed is ½ x 2 x 96,494 joules or 96,494 joules i.e. 96.494 KJ of energy.

The same mole of H_2 is capable of releasing 285 KJ of energy on combustion with oxygen.

Here's another brave scientist saying that EFFICIENT electrolysis does NOT break the laws of physics! ***~Ozzie***

The process of producing H_2 from water usually requires an electrolyte to produce it in quantities.

It suffers from polarisation at the electrodes with hydrogen collecting there. A number of methods are known for improving the efficiency of the process. **In theory the process can be made energy efficient without a breach of any of the laws of thermodynamics.**

Meyer has obviously discovered some method of collecting the hydrogen different from the traditional methods.

---

* *From Faraday's Laws of Electrolysis*

Download this 14-page document:
http://jnaudin.free.fr/wfc/WFCexpl.pdf

The Dublin Institute of Technology was established by the Dublin Institute of Technology Act 1992 and is constituted

Chapter 11.

THEORY: William Rhodes — Common Duct Electrolytic Oxyhydrogen

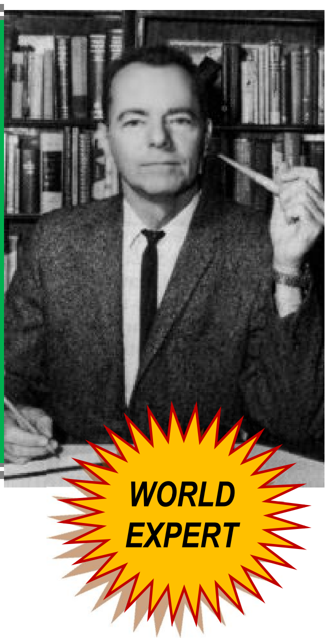

REFERENCES:

- US Patent 3,262,872 (Rhodes, 1966): www.google.co.il/patents/US3262872
- US Patent 3,310,483 (Rhodes, 1967): www.google.com/patents/US3310483

History

This concept was discovered in 1961 by request from a manufacturer for a new and novel means for producing torch flame temperatures beyond those of that era.

Such system was conceived and developed involving electrolytic production of mixed hydrogen and oxygen. Prior to that time, literature on the subject focused exclusively on separation of such gases and conducting them out of the electrolyzer for tank storage.

Using hydrogen and oxygen immediately when generated through a common duct was not found in the literature and it appeared to be a new technology.

The first patent (Apparatus For The Electrolytic Production of Hydrogen And Oxygen For The Safe Consumption patent #3,262,872 issued July 26, 1966) dealt with intermixing the gases in an electrolyzer, issuing through a common duct for instant use in a torch. Nine claims in the patent read:

> ***"an outlet for said generator to conduct a mixture of hydrogen and oxygen gases therefrom"***

…as opposed to other electrolyzers using separate ducts for each gas.

The patent contains the financing party as co-inventor. His contribution was limited to an additional small alcohol booster tank, entraining the vapor for a reducing flame.

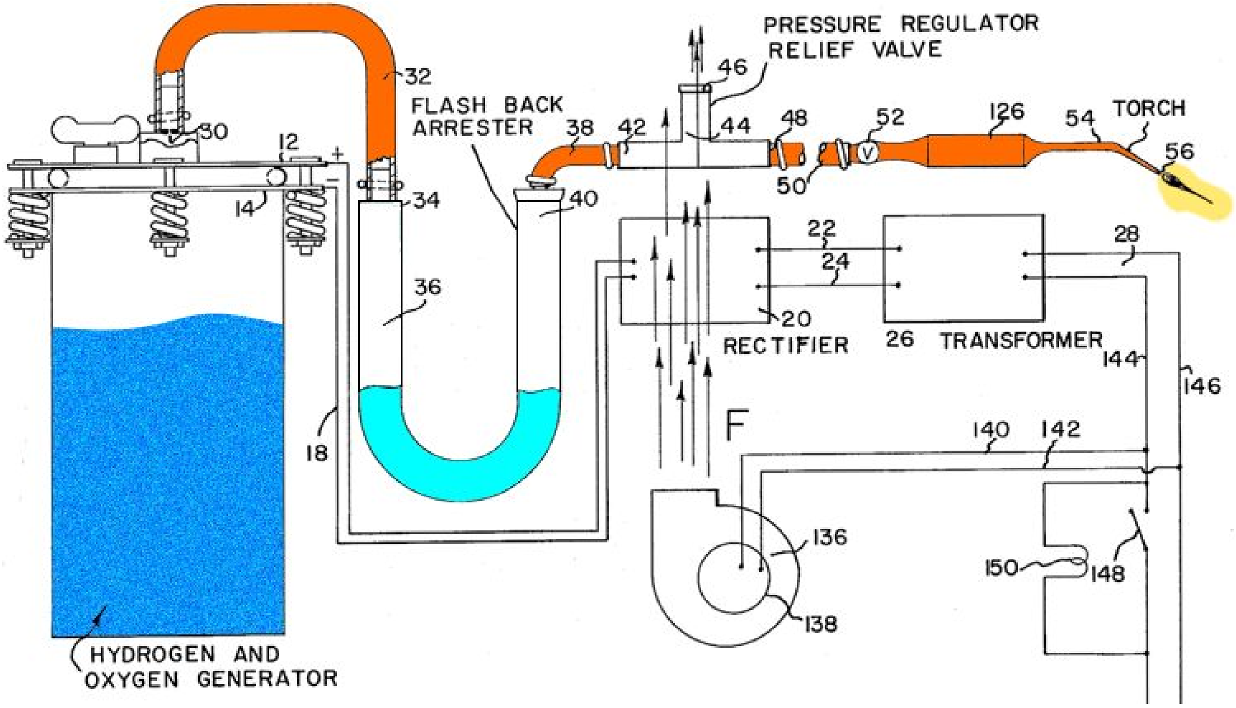

The patent appears to establish my precedence in the art. Starting in 1962, the Henes Mfg., Company of Phoenix sold many thousands of their trademarked ‘Water Welder’ in several sizes, presently continuing under another name.

Immediately after launching the Henes venture, I began research on a large electrolyzer patented in March 1967 under the title “Multicell Oxyhydrogen Generator” (US Patent № 3,310,483).

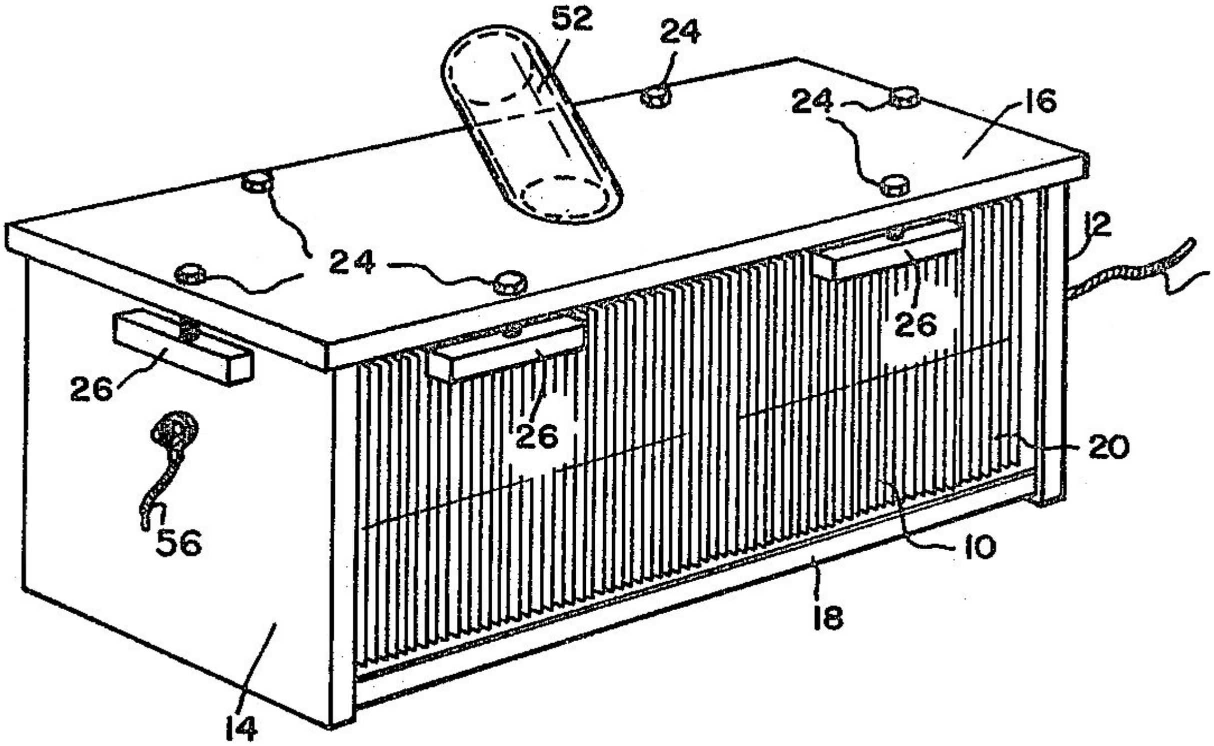

It contained 60 iron plates, nickel plated on the oxygen generating side and iron on the hydrogen side. This patent claims use of loosely fitting grooves for holding the plates in tank 8”x8”x16”x3/4” Plexiglas.

I previously discovered that current could not bypass such plates loosely fitting in grooves of proper design. The torch flame from that unit was 20 inches long, melting everything into blue-white puddles, including firebrick, ceramics and carbon (in argon atmosphere).

REFERENCE PROBLEMS

Of all elements, hydrogen and oxygen should hold no secrets.

Yet, in this example they do and have been troublesome. Many experts in such gases contributed important knowledge hoping such would answer our questions. Their offerings were accurate for tank gases, but these were not tank gases and three major obstacles remained.

1) Flame propagation rate (burning velocity) was unusually high.
2) Flame temperature is far greater than tank gases.
3) Allowing the gases to mix at the moment of generation, and delivered in a common duct for immediate consumption should contain both molecular and atomic components. Until these were examined through experiment and observation, conjecture and theories were invalid.

Flame Propagation Rate Determination

SETUP

A phototransistor cell was attached to a Plexiglas base containing a groove to locate the start and finish marks on a known length of transparent plastic tubing.

An ignition chamber with sparkplug was attached to a 2500 v transformer controlled with a button switch. The electrolyzer was attached to the input end of the spark chamber; a 22 ft length of tubing was attached to the output side of the chamber.

The first marked tubing position was placed in the phototransistor groove, and the 20 ft mark was placed on top of the first tubing mark. Recording equipment included a dual pen strip-chart recorder with parallel connection to a memo-scope and audio tape recorder. NIST WWV[66] clock ticks were coupled to all. With this setup we hoped to capture precision measurements of flame front velocity plus rise and fall time.

---

[66] WWV is a shortwave radio station in Colorado, USA, that broadcasts accurate time from NIST (National Institute of Standards and Technology, an agency of the U.S. Department of Commerce)

TESTS

Electrolyzer gas purged the tubing, and since the flame is in the UV, the electrolyzer was allowed to run until a trace of KOH[67] allowed visual spectra to produce a slight pink-white. Stripchart[68], memoscope and recorder running and standardized. Spark initiated.

SIX SEQUENCES

Recorded timing for 10 feet of tubing was consistently 1.225 milliseconds = 10,000 ft in 1.226 seconds, or 8160 ft/sec div 1088 ft/sec (speed of sound not compensated for our 1150 ft above sea level) was mach 7.5.

Rise and fall pulse duration via memo-scope was 0.5 millisecond with a total baseline to baseline duration of 0.6 millisecond. With exception of the small error between sea level and 1150 ft above sea level, results of these tests appear reliable. This combination has MAXIMUM INSTABILITY. Any electrostatic discharge can trigger a very mild explosion compared with tank H_2 & O_2. The “ashes” from burning are of course pure water.

LUMPED FLAME RATE CONFIRMATION

The previous rate was resolved from pip spacings. These tests were made with the plastic tubing wound into a small donut with phototransistor mounted on the focal plane of a camera lens. A flat-black background behind the donut and floodlight illumination allowed the donut image to be adjusted to cover the active area of the phototransistor. The tubing beyond the measured marks were covered to prevent errors from their exposure.

Instrumentation and standardization was identical to the previous test. Recorded data of the previous were pips, marking the beginning and ending of the flash. This time, burn illumination produced a slightly rounded flat area with a baseline to baseline rise and fall of 0.6 milliseconds as before.

(Previous test shots allowed strip chart recorder gain adjustment for approximately 3 cm reading. The flat tracing showed gradual rise and fall of about 2 mm from beginning to end of a sequence.)

Time measurements of six sequences were identical to the previous. The last test was made with the tubing exit clamped off, and gave readings identical with the others. No tubing rupture occurred and explosion sound was muffled. These should provide sufficient evidence of the flame propagation rate of such mixed gases.

---

[67] Potassium hydroxide, see glossary.

[68] A plotter that produces one-dimensional scatter plots (or dot plots) of the given data.

Flame Temperature

Flame tests in an argon atmosphere directed on several layers of carbon fiber fabric with its micron size filaments (used on the stealth fighter and bomber) melted carbon filaments into brilliant globules. This means carbon's melting temperature 3,550°C (6,422°F) is exceeded, but its boiling point 4,827°C (8,720°F) is not attained. Past that point no reference exists.

Lifting Power Of Electrolyzed Mixed Gases

First, be aware we are dealing with common-ducted gases, data being absent from NIST and the literature. There is also theory vs. experimental evidence to contend with. From the CRC handbook: "Lifting power of 1 cu/ft hydrogen is about 0.075 lb at 760 mm pressure."

SETUP

Our test volume chosen was 1 liter single duct electrolyzed gases. An igloo from a plastic pop bottle was cut to provide exactly 1000 ml volume between the flat igloo door top, and the upper dome. (1000 ml was from a standard 1000 ml flask, transferred to the pop bottle, marking the door top, and extending the igloo another 2", where it was lathe cut and the doorway snipped out.

It was located inverted on the pan of our Mettler milligram balance. An "L" shaped tube on lab stand extended through the doorway and bent upward ending near the dome top, leaving the balance completely free of interference.

The gas generator was purged of air 15 minutes. The balance was tare arbitrarily adjusted for 30 grams ±1 mg. The igloo was filled with pipe smoke; -6 mg deflection noted due to warmer air.

The gas tube was attached and maximum weight reduction of 0.510 grams was attained, rounded off to the nearest mg. Gas input was allowed to flow for 30 minutes for accuracy.

5 minutes after gas cutoff, the balance returned to the pre-gas reading caused by rapid diffusion of electrolyzed gases into atmosphere. Comparing H_2 lifting power, 1 liter mixed gases multiplied to 1 cu/ft provided lifting power of 0.0311 lb. Or 41% that of H_2.

Here we must consider single atoms of hydrogen 1 and oxygen 16 for lifting power against atmosphere (29+). Of course, if a stoichiometric mix of H_2 & O_2 were present, O_2 alone would have a molecular weight of 32, and such gases introduced in the igloo would show a slight weight increase as the combination spilled ***downward*** through the doorway.

Tests For Static Gas Changes

Over the years many suggested if such gases were collected and remained unused, several kinds of recombinations would spontaneously occur regardless of temperature.

Determining volumetric changes of stored electrolyzed gases was done with a calibrated 100 ml domed bell of 1/4” thick Plexiglas open at the bottom and sliding inside a closely fitting Plexiglas container, with an “L” shaped gas entry tube extending upward under the bell.

The bell was held in place to prevent upward movement. 500-viscosity silicone oil was poured into the outer cylinder as air inside the bell was slowly exhausted, causing the oil to fill the bell completely, continuing to flow slowly into the plastic vacuum tubing, to eliminate all air. A cock on the metal L tube was turned off, and the plastic tube pulled from the “L” and cleared of oil.

Room temperature was adjusted for 80 F. When the temperature of the oil over the bell read 75°F, gas electrolysis began, allowing the plastic line to be purged of air, then connected to the cock which was turned on.

Gas filled the bell from top downward below the 100 ml mark. The cock was turned off, gas line pulled, and generator switched off. The cock was cracked to bleed gas down to the 100 ml level and turned off.

At the end of 6 months, room temperature again increased oil temperature to 75°F. Volume change was not measureable. The gas was then allowed to fill the inverted bell on the gram balance.

Calculations gave the same answer as previous, comparing lifting ability as being 41% that of H_2 (plus or minus 2% error). To prevent any light activity, the system was covered with black polyethylene.

Additional Conditions

The only purpose of KOH is to create the lowest possible resistance e.g., highest electrical conductivity. Being slowly depleted by mist generated during electrolysis, specific gravity must occasionally be corrected by addition of KOH.

It is noted that any sharp metallic whisker in the storage atmosphere could cause an explosion, similar to the dangers of storing high percentage hydrogen peroxide, where the entire contents can burst into high pressure steam with disastrous results, just because somewhere in the interior someone forgot to round off a sharp edge.

On the other hand, these mixed gases were ignited repeatedly in a 4 liter container of 16-gage iron with flat ends and sparkplug. The only evidence of ignition was a sharp click, with no damage to the vessel.

A recent report revealed one experimenter was wounded with shrapnel from such explosion. The only way this might happen is from accumulation in an unusually thin container, or one made from an easily fractured plastic.

However, a duplication of the original multicell unit was constructed of 3/4″ Plexiglas with an interior volume of 8 liters. Half of this was filled with electrolyte leaving 4 liters for foam and gas accumulation (identical to the volume of the iron container).

The multicell had a 2.5″ diameter rupturable diaphragm of food grade Saran wrap. The unit was set on a stand in the open and ignited. The resultant pop splintered the case into many pieces which were all deposited within a radius of 5 feet around the stand. The diaphragm remained intact.

Such indicated the sonic wave front was responsible instead of pressure which would have ruptured the diaphragm.

These tests allowed us to design electrolyzer tanks of materials and thicknesses that could contain flashbacks. Viewing the permanent Plexiglas multicell in operation, electrolyte foam rises upward, but at maximum elevation allows sufficient gas space above.

Therefore no purpose is served with designs containing more gas than necessary for conduction out of the reservoir. Extrapolation of chart curves indicate a possible Diesel type explosion as pressure approaches 400 psi. However, this is not conclusive. Generation of such single ducted gases appears to be an event not found in nature, unless lightening produces them.

Flashback Arresters

There are two types of arrester. For small units of one or two liters total tank capacity, two aquarium aerator stones are adequate. Over time they tend to clog with KOH vapor, but can be easily cleared by backflushing with 50% phosphoric acid.

For larger units a water filled U-tube is service-free and best, since its inertia disallows flame movement through the water. An alternate to the U-tube is two tubes of different diameters. [INCOMPLETE]

Flame Propagation Rates of Several Gases

Flame propagation rates refer to complete combustion mixtures to fill a measured length of tubing and after ignition, combustion speed is measured against standard time pulses from WWV transmissions from the National Institute of Standards and Technology.

From the literature, the Butane rate is 60 ft/sec. Acetylene 330 ft/sec. Tank Hydrogen (H_2) 680 ft/sec. Since no literature could be found for mixed atomic gas, burning velocity was precision measured in our lab.

Energy Conversion Limitations

Be aware of this: If a current *i* flows for a time *t* and reacts with water whose electrochemical equivalent is *e* , mass of the gases released is:$m=eit$. This means present chemistry is forever restricted by this equation.

Direct current wave shapes, frequencies, half-waves, full-waves, nothing will allow gas delivery approaching unity. Some claim that under certain electrical manipulations, cells run cooler, or may produce more gas than before.

Yet, if precision measurement instruments are available, they will always show results exactly following this equation. Amperage readings made of rectified direct current by some hang-on ammeters produce enormous errors, leading the observer to believe cell efficiency has improved. This requires special attention to exhibit trustworthy data.

Electrolysis Fundamentals

Potassium Hydroxide (KOH) was chosen because it has the lowest electrical resistance attainable. It also does not cause boiling when mixed with water. Even then, it is best to use half wave rectification of electrical energy to allow the system to operate for longer periods without boiling. After long periods of shut down, atmospheric CO_2 is absorbed, causing carbonates to accumulate. In turn, they reduce output efficiency, and the electrolyte must be dumped and new supplied.

Much of that can be prevented with Vanadium Pentoxide[69] powder, 1 gram per liter or half liter. This is a permanent additive, increasing cell efficiency by lowering cell resistance, reducing heating. The ideal half wave voltage across the electrolyzer is 1.98 volts. But don't let this fool you. 2 volts works just as well. Engineers are prone to quibble forever over fractions, but they just waste time. The 120 Volts ac transformer must supply 3 volts ac before being half wave rectified with a 12 volt silicon rectifier which should be capable of 50 amps but only uses about half that and its positive flexible lead going directly to the + nickel or stainless steel anode. That way, the system runs relatively cool.

Since gas demands vary widely, this provides data for the original unit which can be scaled up as required. The electrolyte is pure water with 28% KOH by weight. It could have been more, but would not leave space for periodic water addition. The Cathode is iron sheet or a tank of iron pipe, It produces the hydrogen gas. The oxygen Anode is the positive electrode and can be made with either pure Nickel, nickel plated iron or stainless steel. If a tank is used, it is a split cylinder welded to the tank top which has a deep groove machined in its top rim. That is where an O-ring is placed to separate the Anode from the Cathode. There is not much more to it, but the arrangement can be seen in my US Patent № 3,262,872 (July l966) "*Single Cell Oxyhydrogen Generator.*"

---

[69] Vanadium oxide (V_2O_5).

Rhodes' HHO* Patents

** This page is the last place on Earth where we can say "Brown's Gas" because Rhodes is right – his HHO Patents came before Brown's. But hey, even the abbreviation "HHO" did not exist when Rhodes filed for these Patents. And "Rhodes Patents" wouldn't fit either because Mr. Rhodes is a creative inventor who has developed many inventions such as telephone systems as well as various electronics, electrical and mechanical devices, power generators and medical devices. So maybe the heading should read simply:*

Rhodes' Waterfuel Patents

Deutsches
Patent- und Markenamt

The document below was also published as Patent № DE1467060A1 by DPMA - Deutsches Patent- und Markenamt (German Patent & Trademark Office), and by USPTO as Patent № 3357472.

Inventors: William A. Rhodes; Raymond A. Henes (Henes Mfg Co.). Patent № 3262872 "Apparatus for the electrolytic production of hydrogen and oxygen for the safe consumption thereof" – granted 26 Jul 1966 (filed 23 Mar 1962)

> *This application is a continuation-in-part of a co-pending application of William A. Rhodes, Serial Number 108164, filed May 5, 1961, and now abandoned, for Means and Method for the Electrolytic Production of Hydrogen and Oxygen for the Safe Consumption Thereof.*

This invention relates to a means and method for the electrolytic production of hydrogen and oxygen and for the safe consumption thereof, by a torch or other means controlling the combustion of these gases.

It has been a problem to utilize a mixture of hydrogen and oxygen in a torch and particularly so when hydrogen and oxygen is produced electrolytically and delivered in a common conduit to such a torch. The explosion hazards of this mixture of gases have been difficult to alleviate.

Additionally, it has been a problem to control the production quantity of hydrogen and oxygen, and to dispose of excess of these gases without creating a hazardous condition. Furthermore, a simple, economical and reliable arrestor for use in stopping combustion of these gases, as it flashes back from a torch toward the generator of such gases, has been very difficult to develop.

July 26, 1966 W. A. RHODES ETAL 3,262,872

APPARATUS FOR THE ELECTROLYTIC PRODUCTION OF HYDROGEN AND OXYGEN FOR THE SAFE CONSUMPTION THEREOF

Filed March 23, 1962 6 Sheets-Sheet 1

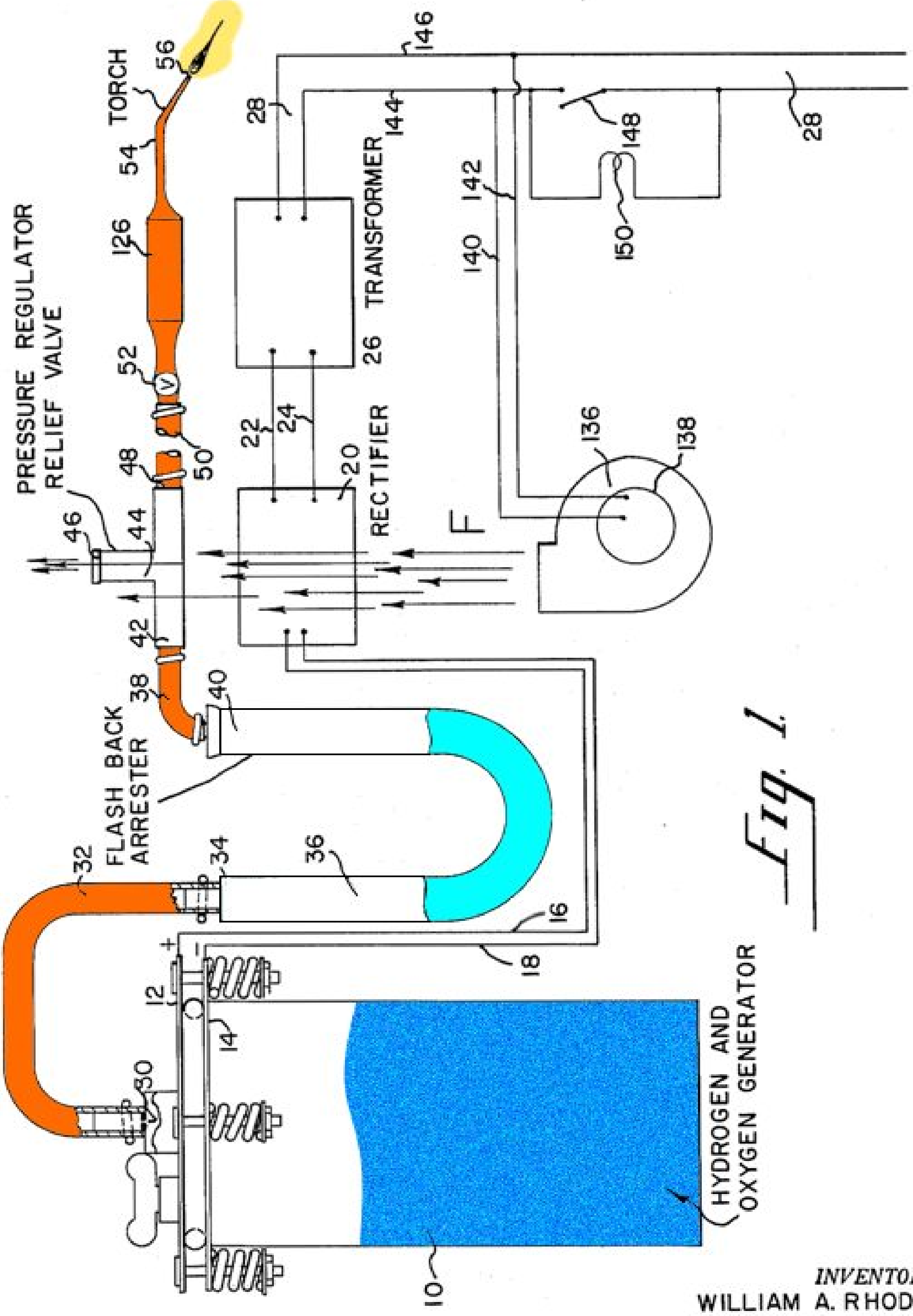

Fig. 1

INVENTORS
WILLIAM A. RHODES,
RAYMOND A. HENES

BY Wm. H. Dean

Accordingly, it is an object of the invention to provide a means for electrolytically producing a mixture of hydrogen and oxygen from water and to conduct the mixture directly to a torch for combustion thereof, without the hazard of dangerous explosions.

Another object of the invention is to provide novel means for resisting flame travel, in a balanced mixture of hydrogen and oxygen from a torch to a production source of hydrogen and oxygen.

Another object of the invention is to provide means for electrolytically producing hydrogen and oxygen, having a bleed-off pressure regulator disposed in the path of a forced air draft which dilutes the excess production of hydrogen and oxygen combustible in the atmosphere.

Another object of the invention is to provide a novel bleed-off pressure regulator for use in handling various compressible fluids.

Another object of the invention is to provide a novel generator for electrolytically producing hydrogen and oxygen in water.

Another object of the invention is to provide a torch and safe means, coupled thereto, for electrolytically producing hydrogen and oxygen and for safely delivering a mixture of these gases to said torch.

Another object of the invention is to provide a very simple and economical torch means having a safe source of electrolytically produced hydrogen and oxygen.

Another object of the invention is to provide a generator wherein hydrogen and oxygen are electrolytically produced in the presence of a highly concentrated alkali in water, whereby the size of the generator may be reduced in size versus gas delivery volume ratio not attained heretofore.

Another object of the invention is to provide a generator for electrolytically producing hydrogen and oxygen; said generator comprising novel, resilient pressure relief mechanism to prevent damage to the generator in the event combustion of hydrogen and oxygen takes place therein.

Another object of the invention is to provide a novel combination of hydrogen and oxygen generator; a rectifier for supplying energy to the generator and a bleed-off pressure regulator for controlling pressure of the mixture of hydrogen and oxygen and oxygen passing from said generator; a blower disposed to force a draft of air over said rectifier for cooling the same disposed to force air over said bleed-off pressure regulator to dilute the excess mixture of hydrogen and oxygen bled therefrom, to thereby render said bleed-off mixture non-combustible.

Another object of the invention is to provide a very compact generator for electrolytic production of hydrogen and oxygen which is provided with novel extended surface area anode and cathode structure formed of concentric tubular members whereon annular surfaces are provided with circumferential ridges and grooves.

Another object of the invention is to provide a novel generator for electrolytically producing hydrogen and oxygen wherein a very simple float structure readily indicates the fluid level in the generator and is readily accessible by removing a filler cap from a filler neck through which water may be added to the electrolyte in the generator.

Another object of the invention is to provide a novel generator for electrolytically producing hydrogen and oxygen wherein a novel frame heat sink structure supports the generator and other components thereof including an AC-DC power supply means which also dissipates heat to the frame and heat sink structure, of the invention.

Another object of the invention is to provide a novel generator for electrolytically producing of hydrogen and oxygen which delivers a mixture of hydrogen and oxygen through a novel tank of methyl alcohol or equivalent material whereby such material is entrained in the mixture of hydrogen and oxygen and may be burned to reduce the oxygen content in the area of the flame and at a high temperature cone of a torch and around an area of material being welded so that such material, when welded, is not readily oxidized.

Another object of the invention is to provide a novel generator for the production of hydrogen and oxygen and means coupled thereto to provide for an increase in the BTU output of a hydrogen and oxygen flame which is fed from the generator of the invention.

Further objects and advantages of the invention may be apparent from the following specification, appended claims and accompanying drawings, in which:

FIG. 1 is a diagrammatic view of an electrolytic hydrogen and oxygen producing generator together with a conduit means for delivering the hydrogen and oxygen to a torch and including flash-back arrestors and a power supply to the generator as well as a blower for cooling the rectifier and diluting bleed-off gas from the generator;

FIG. 2 is an axial sectional view of the electrolytic hydrogen and oxygen generator;

FIG. 3 is an enlarged side elevational view of the torch, of the present invention, showing portions thereof, broken away and in section to amplify the illustration;

FIG. 4 is an enlarged fragmentary sectional view of a flash-back arrestor of the present invention;

FIG. 5 is an enlarged fragmentary sectional view of the bleed-off pressure regulator of the invention;

FIG. 6 is an enlarged fragmentary side elevational view of a modified form of the flash-back arrestor of the invention showing portions broken away and in section to amplify the illustration;

FIG. 7 is an end view of a modified form of generator for the electrolytic production of hydrogen and oxygen;

FIG. 8 is a side elevational view thereof;

FIG. 9 is a top or plan view of the modified generator for the electrolytic production of hydrogen and oxygen, as shown in FIGS. 7 and 8 of the drawings;

FIG. is a sectional view taken from the line 10—10 of FIG. 9;

FIG. 11 is a sectional view of a hydrocarbon fluid entrainment tank of the present invention; and

FIG. 12 is a fragmentary sectional view of a further modification of the invention.

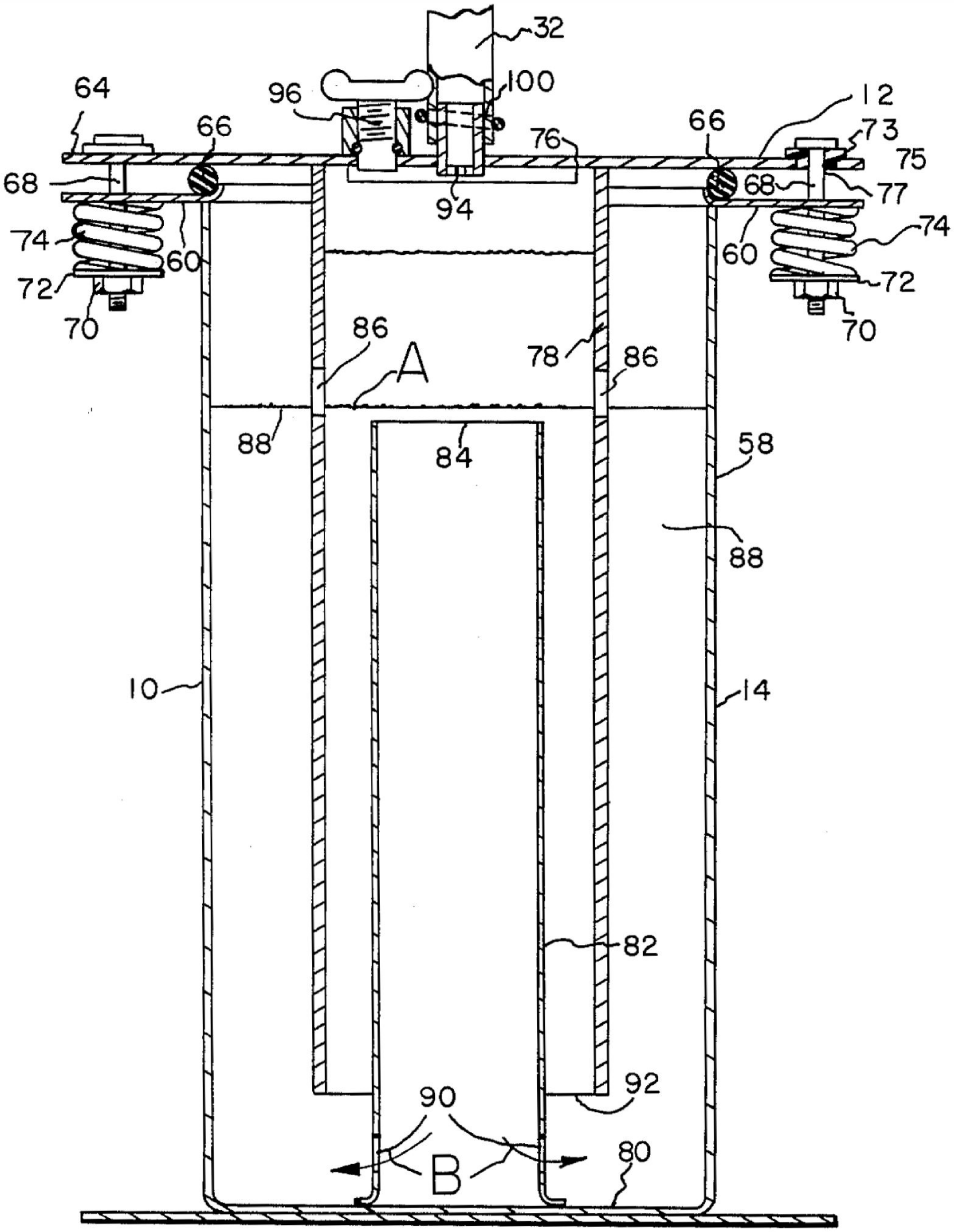

Fig. 2.

As shown in FIG. 1 of the drawings, an electrolytic hydrogen and oxygen generator 10 is provided with an anode 12 and cathode 14, electrically coupled to electrical conductors 16 and 18, respectively, which is supplied energy by means of a rectifier 28 receiving energy through conductors 22 and 24 from a transformer 26 coupled to a conventional alternating current line 28.

Hydrogen and oxygen produced by the generator 10 passes from an outlet 30 in the top of the generator 10 and into a tube 32 which is coupled to one upstanding leg 34 of a U-tube flash-back arrestor 36. Another tubular conduit is coupled to the opposite upstanding leg 40 of the U-tube flash-back arrestor 36 and this tube 38 conducts the mixture of hydrogen and oxygen to an inlet 42 of a bleed-off pressure regulator 44.

The bleed-off pressure regulator 44 is provided with a bleed-off outlet 46 disposed to deliver excess hydrogen and oxygen to the atmosphere and will be hereinafter described. The bleed-off pressure regulator 44 is provided with an outlet 48 to which a flexible conduit 50 is connected. The opposite end of this conduit 50 is connected to a torch valve 52 disposed to deliver the mixture of hydrogen and oxygen to a torch 54 having a top 56 at which combustion of hydrogen and oxygen takes place.

Referring now to details of the electrolytic hydrogen and oxygen generator, as shown in FIG. 2, it will be seen that the anode 12 provides a cover for the generator. This cover is coupled to the cathode 14, which generally forms the tank structure of the generator.

The cathode 14 comprises a long slender cylindrical tank portion 58 composed of pure iron from which hydrogen bubbles are produced, as will be hereinafter described. This cylindrical tank portion 58 is provided with an angular flange 60 which is slightly spaced from a similar flange 64 of the anode 12. Disposed between the flange 60 and 62 is a compressible O-ring 66 preferably made of resilient dielectric material such as rubber, or its equivalent. Bolts 68 extend through the flanges 60 and 62 and nuts 70, screwthreaded on the bolts 68, engage a washer 72, which bears against compression springs 74, engaging the flange 60, whereby the flanges 60 and 64 are forced toward each other into firm feeling engagement with the O-ring 66. Insulator sleeves 73 fit in openings 75 in the flange 64 and the bolts 68 extend through central openings 77 in the insulating sleeves 73.

The anode 12 is provided with a central cover portion 76 having a nickel-plated iron cylindrical section 78, Welded or otherwise secured thereto, and extending downwardly and concentrically into the tank-shaped portion 58 of the cathode 14. The cathode 14 is pure iron and is provided with a bottom portion 80 having a pure iron upstanding cylindrical portion 82 welded or otherwise secured thereto. This cylindrical portion 82 of the cathode 14 is disposed concentrically of the cylindrical portion 78 of the anode, as hereinbefore described.

The tank portion 58 of the cathode 14 is partially filled with a solution of alkali and water. This solution is highly concentrated, the alkali being in an amount equal to that of the water, as for example, the weight of the alkali substantially equals the weight of the water.

The solution of water and alkali is disposed at a level slightly above an upper end 84 of the cylindrical portion 82 of the cathode 14.

As shown in FIG. 2 of the drawings, the upper surface of the solution is disposed as indicated by the line A and the cylindrical portion 78 of the anode is provided with openings 86 which are partially above and below the level A. These openings 86 permit foam to pass from a space 88 between the outer wall of the cylindrical portion 58 and the cylindrical portion 78.

The cylindrical portion 82 of the cathode is provided with openings 90 in its lower portion to permit circulation of the solution in the direction of arrows B, shown in FIG. 2 of the drawings.

During hydrogen and oxygen production, bubbles of both gases rise upwardly in the solution and foaming of the solution takes place at the upper surface thereof. This foaming action causes the solution to foam over into the upper open end 84 of the cylindrical portion 82, which causes a constant downflow of the solution therein. The openings 90 permit this downward flow and escape of the solution outwardly of the cylindrical portion 82 near the lower interior of the tank portion 58 of the cathode. These openings 90 are below a lower open end 92 of the cylindrical portion 78 of the anode so that the solution may circulate freely from the interior of the cylindrical portion 82 outwardly through the openings 90 and back into the tank portion 58 of the cathode.

The openings 86 in the cylindrical portion 78 of the anode permit foam and bubbles to pass from a space 88 hereinbefore described, into the interior of the cylindrical portion 78 of the anode.

In the central cover portion 76 of the anode, an outlet orifice 94 is provided to control flash-back into the generator 10, as will be hereinafter described in detail. This orifice 94 provides an outlet for a mixture of hydrogen and oxygen produced in the generator 10.

As shown in FIG. 2 of the drawings, the central cover portion 76 of the anode is provided with a screwthreaded filler plug 96, which may be removed to permit the addition of water to the alkali solution in the generator 10.

The tubular conduit 32 is coupled to a hollow cylindrical sleeve 100, welded or otherwise secured in the central cover portion 76 of the anode to provide an outlet for the mixture of hydrogen and oxygen produced in the generator. The orifice 94, as hereinbefore described, is disposed in the lower end of the tube and this orifice may be approximately .050 of an inch in diameter as compared to an orifice diameter of .040 of an inch at the tip 56 of the torch 54, as will be hereinafter described in detail.

Direct current is supplied to the anode and cathode structures of the generator 10, in accordance with the concentration of the alkali, such as sodium hydroxide, or an equivalent ionizing agent, and water. The direct current is applied with low voltage and relatively high amperage, as for example, 4 volts at 250 amperes is suitable when using the foregoing, substantially saturated solution of alkali and water. This provides for a current density of approximately 1 ampere to 1 square inch or less of the generator area.

It will be appreciated that the foregoing proportions of alkali and water represent a substantially saturated solution in which the alkali and water are substantially equal in weight. This highly concentrated solution tends to minimize electrical resistance with attendant temperature rise in the electrolyte and therefore permits the system to operate with low voltage and relatively high amperage. Additionally, it will be understood that, due to low resistance of the electrolyte, the efficiency of the system is high with a maximum production of hydrogen and oxygen gases in proportion to the size of the generator.

The flash-back arrestor 34 is a U-shaped tube having upstanding legs 36 and 40. This tube 34 contains non-inflammable liquid 102, which partially fills the legs 36 and 40.

The leg 36 is coupled to the tube 32 and disposed to receive a mixture of hydrogen and oxygen gases in a direction of the arrow C, in FIG. 4 of the drawings. The gases bubble through the liquid 102 and move upwardly in the leg 40 in a direction of the arrow D, in FIG. 4. The mixture of gases then passes upwardly through the tube 38 toward the bleed-off pressure regulator 44.

In the upper open end of the leg 40 of the U-tube 34 is a friction tight cork 104 having a solid, hollow tubular member 106 therein. An end 108 of the outlet tube 38 is clamped on the tubular member 106 by a resilient clamping ring 110. The cork 104, being secured in the upper end of the leg 40 by friction, may readily be blown out of the open end of the leg 40 when and if a flash-back explosion occurs in the leg 40 above the surface of the liquid 102.

The tube 38 is coupled to the inlet 42 of the pressure regulator 44, as shown in FIG. 5 of the drawings. This bleed-off regulator 44 is provided with a gas passage 112 having a vent opening 114 in its upper wall portion. Seated in the vent opening 114 is a ball 116 preferably made of nylon, other plastic, or stainless steel.

Supported on and above the ball 116 are relatively heavy steel balls 118 which tend firmly to hold the ball 116 intimately seated to close the vent opening 114. All of the balls 116 and 118 are supported in a guide tube 120, which is disposed vertically to support the balls directly above the vent seat 114.

It will be understood that the balls 118 may be made of various materials, as desired. However, these balls should be made of heavy material in order to provide sufficient pressure to attain a desired bleed-off pressure of gases through the vent opening 114. It will be understood that the bleed-off pressure through the vent opening 114 may be increased by adding heavy balls to the column above the balls 116. Conversely, the bleed-off pressure through the vent opening 114 may be reduced by reducing the number of heavy steel balls.

Various materials may be used in these pressure regulating balls, as desired, depending upon the requirements.

When gas pressure reaches a predetermined value in a conduit 112, the column of pressure regulating balls is raised slightly and the gas escapes upwardly therearound and through a vent opening 112 in a cap 124 at the upper end of the casing 120. The gas passing through the vent opening 112 will be diluted by a flow of atmosphere from a blower 136, as will be hereinafter described.

Fig. 3.

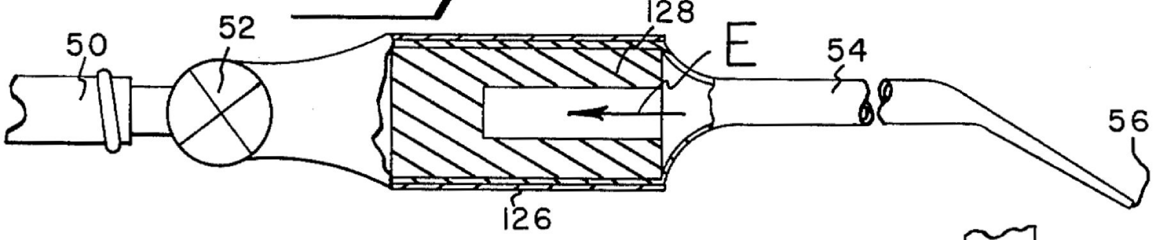

Fig. 4.

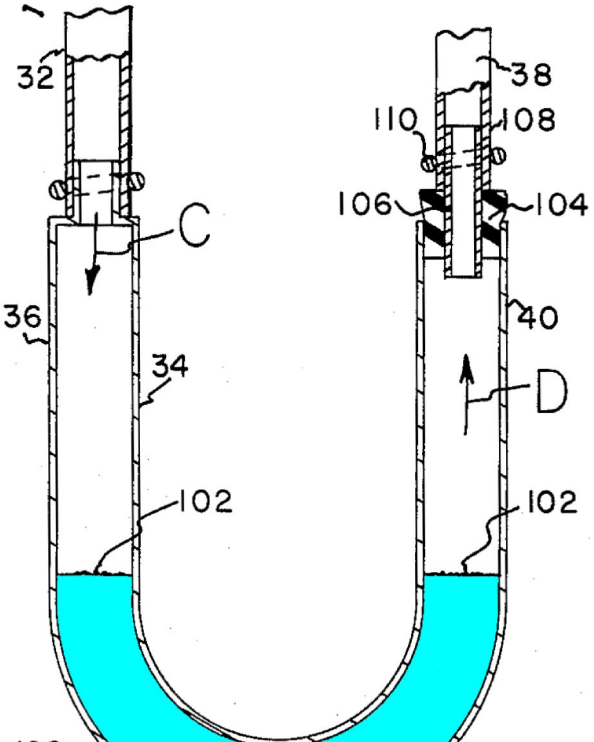

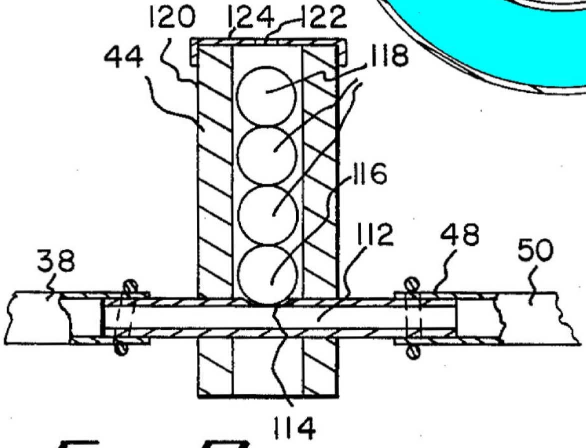

Fig. 5.

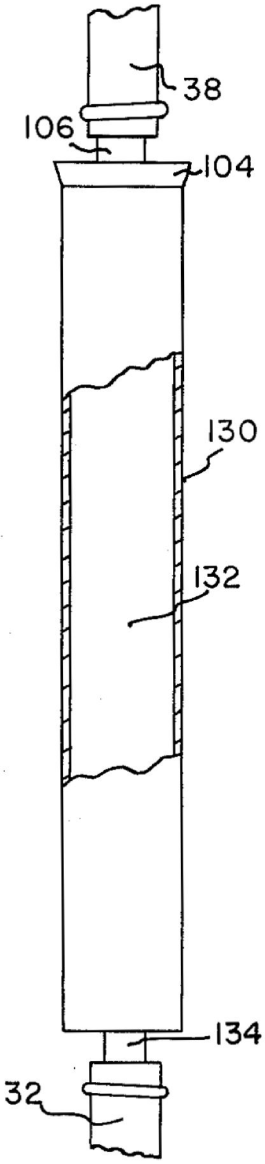

Fig. 6.

A pressure regulated mixture of hydrogen and oxygen passes from an outlet 14 of the bleed-off pressure regulator 44 through the flexible conduit 50 to a control valve 52 which regulates the flow of gases to the torch 54.

This torch 54 is provided with a handle portion 126 wherein a ceramic-type flash-back arrestor 128 is disposed.

As shown in FIG. 3 of the drawings, the handle portion 126 of the torch 54 is hollow and the ceramic flashback arrestor 128 is intimately disposed in the hollow handle portion 126 in order completely to block combustion which may travel backwardly from the tip 56 of the torch 54 in a direction of the arrow E, in FIG. 3 of the drawings.

The flashback arrestor 128, for example, may be made of a porous Carborundum material, such as that used in grinding wheels. An 80-grit Carborundum has been found very effective in arresting flash back through the torch 54, to the tube 50.

It has been found that the torch 54 may be provided with tips 56 varying in orifice diameter from around .005 of an inch to .040 of an inch or greater and that under operating conditions employing orifice sizes in this range, the flash-back arrestor 128 effectively prevents flame travel from the torch 54 to the tube 50.

As shown in FIG. 6 of the drawings, a modified flashback arrestor communicates with the tube 38 and is generally located in a position similar to that of the flashback arrestor 34. This flash-back arrestor, as shown in FIG. 6 of the drawings, is provided with a vertical tube 1 3i having a friction-connected cork 104 in the upper end thereof which is similar to the cork 104, hereinbefore described, in connection with the upper end of the leg 40 of the flash-back arrestor 34.

The tube 130 is partially filled with water 132 and the lower end of the tube 130 is provided with a reduced tube 6 section 134 to which is connected an extension of the tube 32, shown in FIG. 1 of the drawings.

In operation, the modified flash-back arrestor 130, permits a mixture of hydrogen and oxygen to bubble upwardly through the water 132 and in the event of a flashback through the tube 38, the cork 104 may be blown out of the upper end of the tube and the liquid 132 may pass back through the tube 32 but cannot pass rapidly through the orifice 94 at the outlet of the generator, as shown in FIG. 2. This is a small orifice and might permit only a very small portion of the water 132 to pass therethrough before force of the flashback explosion in the upper end of the tube 130 is relieved by expulsion of the cork 105.

As shown in FIG. 1 of the drawings, a blower 136 delivers air in a direction as indicated by arrows F so that this air travels over the rectifier 20 for cooling the same and also passes the bleed-off pressure regulator 44 in order to dilute the excess mixture of hydrogen and oxygen which bleeds off through the orifice 122, shown in FIG. 5 of the drawings. The volume of air delivered by the blower 136 is sufficient completely to dilute the mixture of oxygen and hydrogen passing from the orifice 122 in order to render it non-combustible, thus, the mixture of these gases leaving the bleed-off pressure regulator 44 cannot be ignited and thus such hazard is eliminated.

The blower 136 is provided with a motor 138 electrically coupled by conductors 140 and 142 to conductors 144 and 146 of the alternating current supply 28. A switch 148 is disposed to break the alternating current supply 28 and is disposed in the line 144, thus the blower 136 and transformer 26 are concurrently energized when the switch 148 is closed.

Coupled to the line 14 4 around the switch .148 is a lamp 150 of low Wattage capacity which always permits a small amount of energy to be conducted to the transformer 26 and rectifier 20 so that the electrolytic generator :10 always produces a very small amount of hydrogen and oxygen. This may amount to only a bubble now and then, whereby the gases in the ‘generator are not permitted to recombine completely and evacuate the generator when the switch 148 is open. Only enough hydrogen and oxygen is thus generated to prevent evacuation of the generator 10.

If the generator 10 is completely de-energized, the hydrogen and oxygen gases therein eventually recombine and cause evacuation of the generator. If this is permitted, the modified flash-back arrester, shown in FIG. *6, is also evacuated whereby the water 102 therein is slowly drawn into the generator through the orifice 94. Subsequently, when the torch 5 6 is ignited, and in the event of undetected damage to the flashback arrestor 128, then the flashback arrestor might fail and permit flame to travel all the way back to the generator The U-tube flash-back arrestor 34 is not adversely affected by evacuation of hydrogen and oxygen in the generator, since the loop at the lower end of the U-tube structure always may retain water.

The lamp 150 thus serves the purpose of maintaining a small amount of energy to be conducted by the generator 10 to produce a nominal amount of hydrogen and oxygen, sufficient only to prevent total recombining of the bases in the generator and thereby to prevent evacuation of the flash-back arrestor 34.

Referring to FIG. 2 of the drawings, it will be seen that the generator 10 may relieve explosive pressure internally thereof, due to operation of the spring-loaded cover 76, forming a part of the anode 12.

Should an explosion take place in the generator 10, the cover 76 may be raised by internal pressure, permitting a relief of gas outwardly around the O-ring 66. This relief is permitted by resilience of the springs 74, which may be compressed and thereby permit the cover 76 to move upwardly relative to the O-ring 66 and thereby vent pressure from the interior of the generator 10.

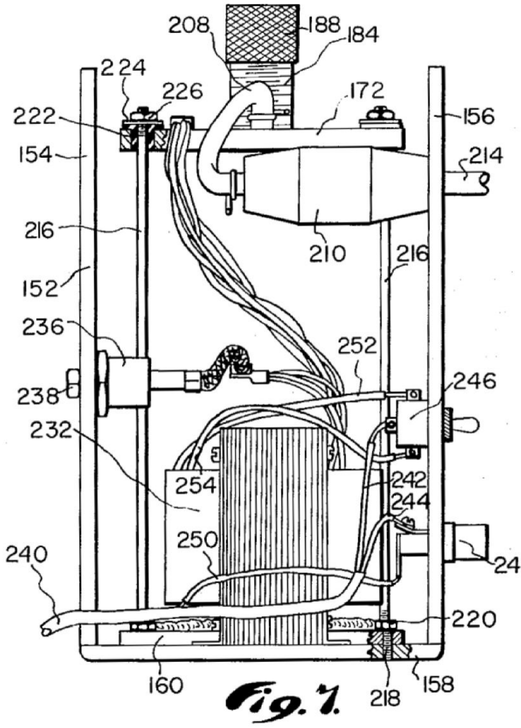

Fig. 7.

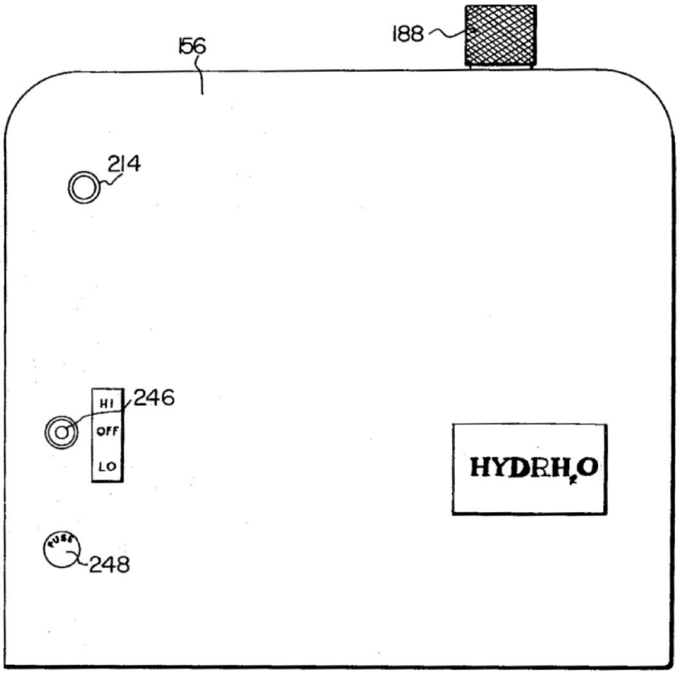

Fig. 8.

As shown in FIG. 7 of the drawings, the modification of the invention comprises a frame and heat sink structure 152 which is generally U-shaped. This frame structure is provided with a pair of substantially vertical side plates 152 and 156 integral with which is a base plate 158. The frame and heat sink structure 152 is preferably made of aluminum or other material having a high heat transfer rate. Thus, the frame serves as an efficient heat sink structure to dissipate heat from the generator, transformer and rectifier devices, as will be hereinafter described in detail.

Disposed between the side plates 154 and 156 is a generator base plate 160 to which is welded an upstanding hollow cylindrical generator casing 162 which serves as a reactor cathode for electrolytic production of oxygen, as will be hereinafter described. This casing 162 is preferably made of steel pipe or tubing and is peripherally welded at 164 to the base plate 160.

The upper annular edge 166 of the casing 162 is engaged with a sealing gasket 168 held in a groove 170 of a cover 172 to the lower side of which is welded a hollow tubular reactor anode 174. This anode 174 is preferably made of steel pipe or tubing and is suspended concentrically in the outer casing 162 and provided with a lower end 176 spaced from the upper surface of the base plate 160, all as shown best in FIG. of the drawings. The casing 162 is provided with an internally threaded wall 178; conventional screwthreading of this wall 178 provided extended surface area thereof for a large volume production of oxygen in proportion to the overall external dimensions of the casing 162.

It will be understood that the extended surface area of the internal wall of the casing 162 may be provided by other means than the screwthreads 178, as for example, inwardly directed fins, or the like. The annular construction of the casing 162 is very readily provided with an internal screwthread 178 which is the simplest manner of extending the internal cathode surface area of the generator.

The reactor anode 174 is provided with external annular screwthreads 180 to extend the surface area of the anode for the production of a maximum amount of hydrogen in proportion to the size of the generator.

It will be obvious to those skilled in the art that since this reactor anode 174 is annular, that external annular fins may be provided in lieu of the screwthreads 180.

The upper end of the tubular anode structure 174 is welded at 182 to the cover 172 and the gasket ‘168 acts to insulate the cover 172 from the cathode casing 162, as will be hereinafter described.

Concentrically of the cover 172 is a filler neck 184 of hollow cylindrical construction which is peripherally welded at 186 in a central opening in the cover 172.

A cap 188 is screwthreaded on the neck 184 and is provided with a gasket 190 to provide for a sealing engagement of the cap 188 with the upper end of the filler neck 184.

Disposed concentrically and internally of the hollow cylindrical anode 174 is a float 192 preferably made of Styrofoam, or the like.

This float 192 is mounted on a rod 194 having a shoulder 196 thereon against which the float 192 moves upwardly while buoyantly supported on the electrolyte 198 in the generator. The rod 194 is provided with a lower end 200 which may engage the base plate 160 when the electrolyte 198 is at a low level. The rod 194 is also provided with an upper end 202 which may be level with the upper end of the filler neck 184 when the electrolyte 198 is at a proper level in the generator. Thus, the addition of water through the filler neck 184 may be continued until the float 192 rises to carry the upper end 202 of the rod 194 to a position which is substantially level with the upper end of the filler neck 184. This charges the generator with a proper amount of water so that the electrolyte is at a proper concentration and capable of electrolyzing water into hydrogen and oxygen gases.

The cathode casing 162 at its internal screwthreads 168, generates oxygen which passes upwardly, as indicated by arrows in FIG. 10 of the drawings; said oxygen being produced on the extended surface area of the threads 178 while comparable action of the anode on its externally screwthreaded portion 186), produces hydrogen and these gases mix above the electrolyte 198 and pass upwardly through an opening 204 in the side Wall of the reactor anode adjacent the cover plate 172. Thus, the gases pass inwardly to the interior of the anode 174 and pass outwardly through a tube fitting 206 screwthreaded in the cover 172. A tube 208 is coupled to the fitting 286 and extends to a flash-back arrestor casing 210 having a porous stone 212 therein through which the mixture of hydrogen and oxygen passes to a tubular conduit 214, as will be hereinafter described in detail.

The electrolyte 198 in the generator is preferably as disclosed in a patent application of William A. Rhodes for Electrolyte Solution, Serial Number 109521, filed May 12, 1961.

As shown in FIG. 7 of the drawings, the structure of the generator and the frame and heat sink 152, are held in assembly by four bolts 216. These bolts 216 are provided with lower screwthreaded ends 218 which are screwthreaded in the base plate 158 and disposed on the screwthreaded portions of the bolts 216 are jam nuts 220 which are tightened downwardly upon the upper portion of the base plate 160 of the generator casing 162 to hold said plate intimately engaged with the base plate 158 of the frame and heat sink structure.

Surrounding the normal-1y upper ends of the bolts 216 are electrical insulation bushings 222 which insulate these bolts from the cover 172 and engaging the insulation bushings are steel bushings 224 engaged by screwthreaded nuts 226 which firmly clamp the cover 172 downwardly to hold the gasket 168 intimately in sealing engagement with the upper peripheral edge 166 of the generator casing 162.

The cover 172 by means of the insulation bushings 222 and the gasket 168 is completely electrically insulated from the generator casing cathode structure and, as hereinbefore described, the anode 174 is electrically coupled to the cover 172 by the welding 182.

An electrical conductor 228 is coupled by means of a screw 230 to the cover 172 and this electrical conductor 228 is also coupled to a transformer 232.

Another conductor 234 coupled to the transformer is connected through a diode rectifier 236 with the side wall 154 of the frame and heat sink structure, all as shown best in FIGS. 7 and 10 of the drawings.

It will be seen that the diode rectifier is electrically connected and thermally conductively coupled to the plate 154 by means of a bolt 238 and that the base plate 158 of the frame is electrically coupled to the casing 162 which is the generator cathode.

A conventional -volt alternating current line 240 is provided with a pair of conductors 242 and 244 which are connected to a switch 246 and a fuse 248, respectively. A conductor 250 extends from the fuse 248 to one winding of the transformer 232 and a pair of conductors 242 and 244 extend to multiple windings of the transformer 232 to vary the output thereof in order to provide for varying amounts of energy to be dissipated from the cathode and anode structures 162 and 174, respectively, whereby a variation may be attained in the amount of hydrogen and oxygen delivered through the tube 208 and flash-back arrestor 210 to the tube 214.

The tube 214 delivers a mixture of hydrogen and oxygen into a fluid containing tank 256, as shown in FIG. 9 11 of the drawings, and indicated by arrows A, in FIGS. 10 and 11 of the drawings.

Fig. 9.

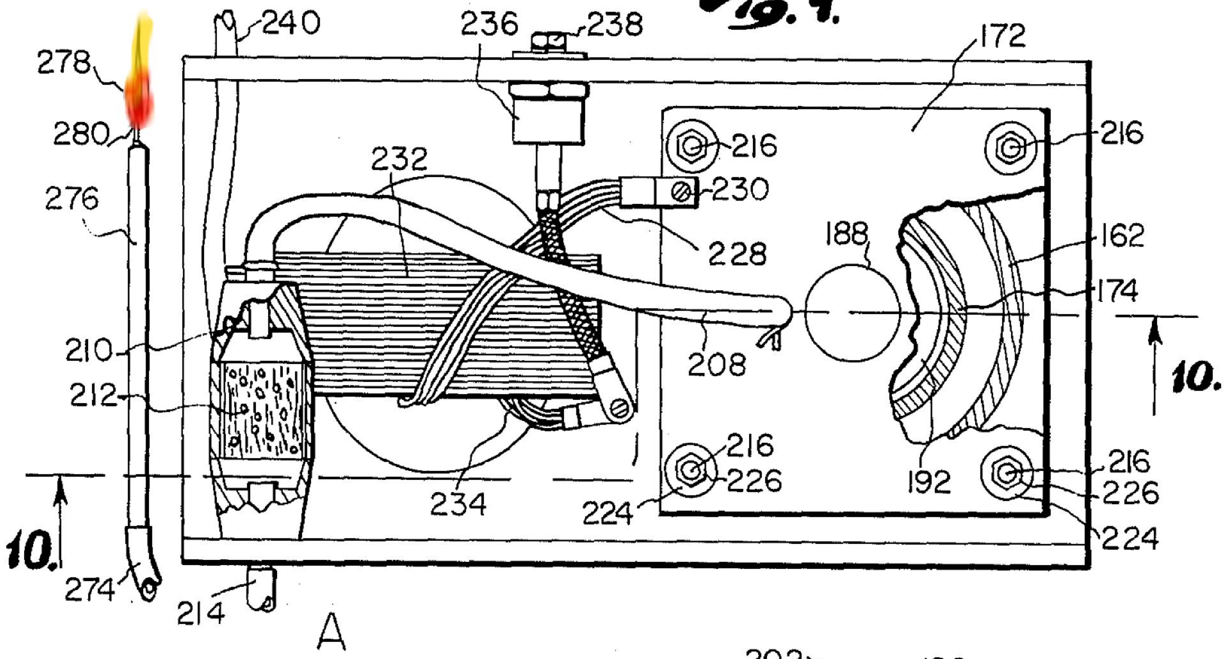
240
236
238
172
278
280
232
216
230
276
228
188
162
174
210
208
10.
212
216
226
234
224
192
216
226
224
10.
274
214
A

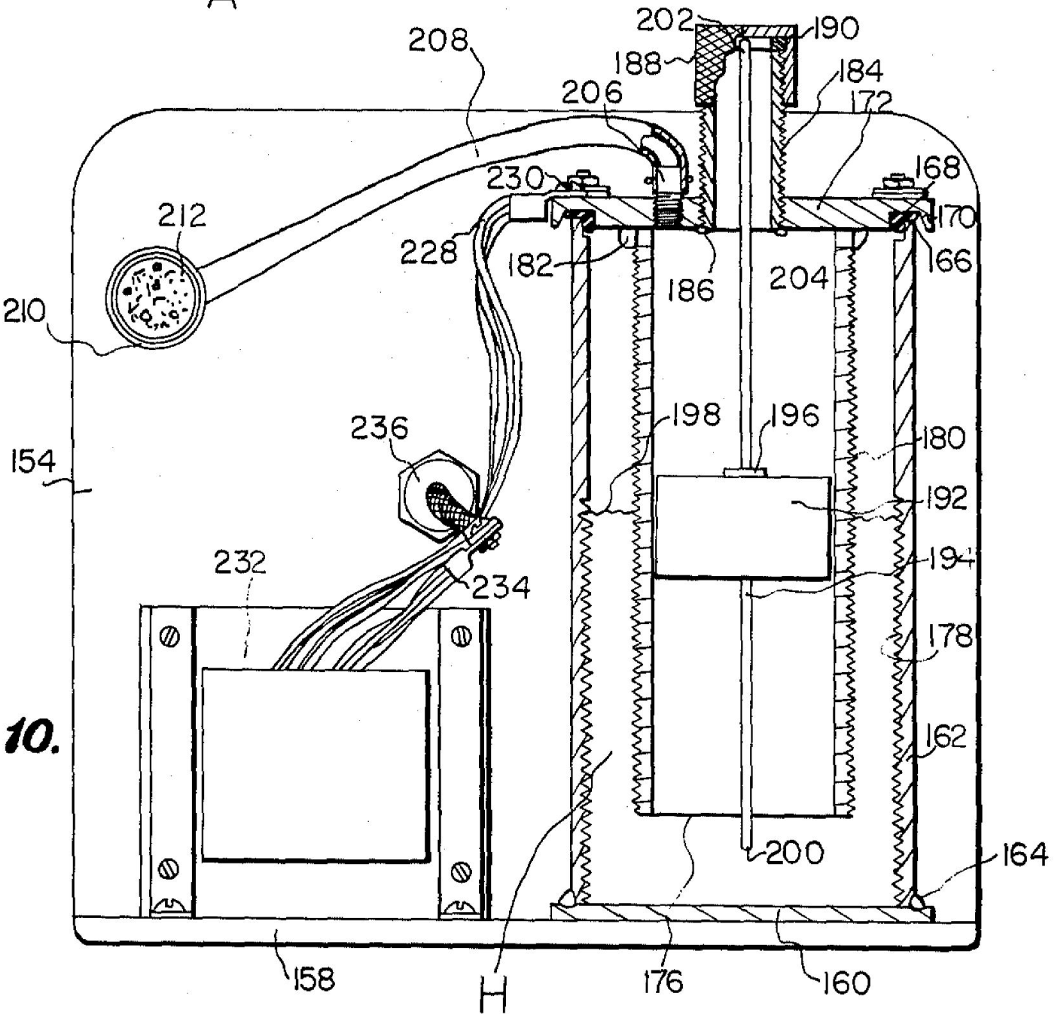
202
190
188
208
184
206
172
168
230
170
212
228
182
166
186
204
210
198
196
180
236
154
192
232
234
194
178
162
200
164
158
H
176
160

Fig. 10.

The mixture of hydrogen and oxygen passes downwardly into a tube 258 which is supported in a cover 260 and sealed relative thereto. The cover 260 is provided with a gasket 262 engaged in sealed relation with an upper end 264 of the tank 256. A screwthreaded skirt 266 of the cover 260 is screwthreaded on the upper end of the tank 256 for holding the cap 260 in sealed relation therewith.

Disposed in the tank 256 is a fluid such as methyl alcohol, designated 268, or any equivalent fluid.

A tube 258 extends downwardly into this fluid and is provided with a reverse bend having an upwardly extending portion 270 in which a ball check valve 272 is disposed. A mixture of hydrogen and oxygen bubbles up around the ball 272 and passes upwardly through the fluid 268 and outwardly through a tube 274, as shown in FIGS. 10 and 11 of the drawings.

The mixture of hydrogen and oxygen then passes through a torch 26, shown in FIG. 9 of the drawings, to a combustion flame 278.

The methyl alcohol is entrained in the hydrogen and oxygen and adds to the BTU content of these two gases while at the same time tends to consume excess oxygen in the gases and secondary oxygen from the surrounding atmosphere so that any materials being welded by the flame 278 are thus surrounded by a reducing atmosphere which tends to combine with oxygen surrounding the area of the weld thereby preventing oxidation of the materials being fused.

The torch 278 is provided with a flame holding orifice which may be as small as .014 of an inch in diameter. A small amount of aqueous condensate may tend partially to clog this fine orifice, however, the entrained methyl alcohol automatically clears any such aqueous condensate from this orifice, thus keeping it clear and operative.

During operation of the modified form of the invention, as shown in FIGS. 10 and 11 of the drawings, hydrogen and oxygen gases may be under slight pressure in the tank 256 above the hydrocarbon fluid 268 therein. Due to a restriction of a flame holding orifice 280 of the torch 276, residual pressure in the tank 256 above the electrolyte 268 may remain for a period of time after the generator is shut off. Accordingly, the check valve 272 is disposed to prevent flow of hydrocarbon fluid 268 backwardly through the tube 258 in the event the cap 188 of the filler neck 184 is removed before such residual pressure in the tank 256 has been relieved through the orifice 280 of the torch 276. Thus, the check valve 272 effectively prevents hydrocarbon fluid from flowing backwardly into the generator and into the electrolyte 198 therein.

The check valve 272 is also effective to prevent backflow of hydrocarbon fluid into the generator after the operation of the generator is discontinued. Under these conditions, the remaining mixture of hydrogen and oxygen in the generator tends to recombine into water thus creating a partial vacuum in the generator which tends to pull fluid from the tank 256 backwardly into the generator.

July 26, 1966 W. A. RHODES ETAL **3,262,872**

APPARATUS FOR THE ELECTROLYTIC PRODUCTION OF HYDROGEN AND OXYGEN FOR THE SAFE CONSUMPTION THEREOF

Filed March 23, 1962 6 Sheets-Sheet 6

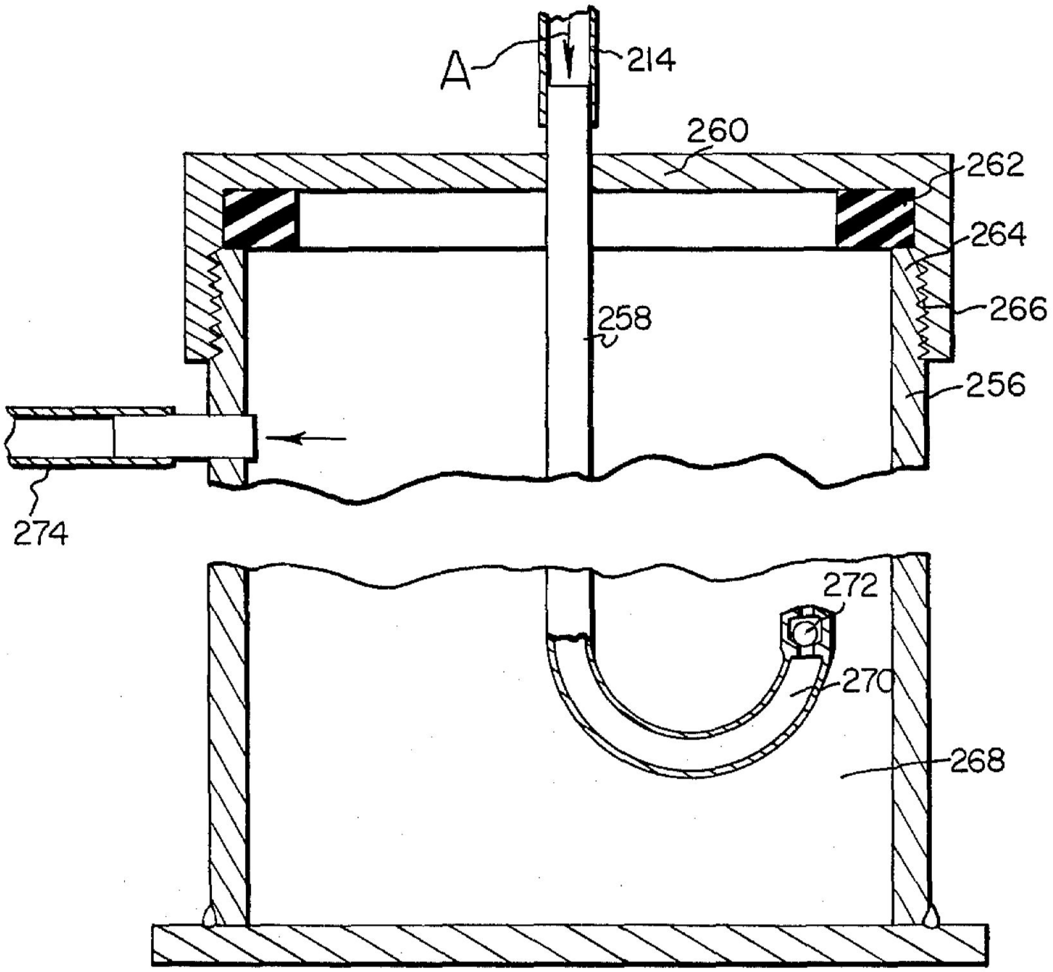

Fig. 11.

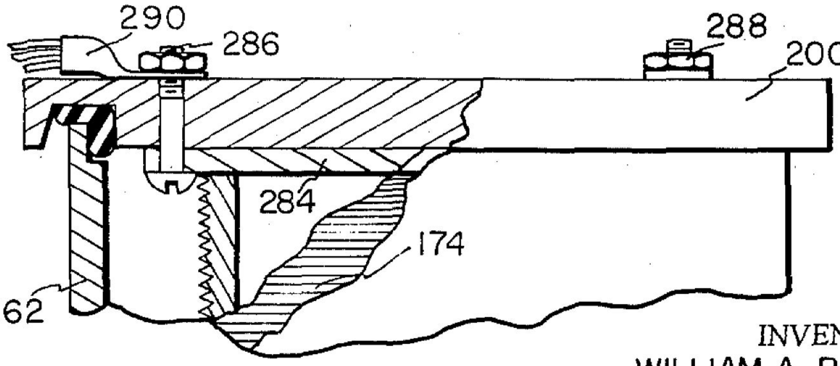

Fig. 12.

INVENTORS
WILLIAM A. RHODES,
RAYMOND A. HENES

BY Wm. H. Dean

In the modification, as shown in FIG. 12 of the drawings, the anode 174 is similar in construction to that shown in FIG. 10 of the drawings but is welded to a narrow strap 284 which is held to the cover 200 by bolts 286 and 288. The bolt 286 extends through a fixture 2% of the conductor 228, hereinbefore described.

It will be understood that the casing 162 which forms the cathode of the generator, may be made of bare steel and that the anode 174, shown in FIGS. 10 and 12 of the drawings, may also be made of steel and since it produces oxygen, destruction of this anode gradually takes place and it is therefore to be considered as an expendable item of the generator. Accordingly, in the modification, as shown in FIG. 12 of the drawings, the narrow strap 284 permits replacement of the anode 174 by simple removal of the bolts 286 and 288. These bolts extend through the cover 288 and are sealed with suitable cement so that no leakage of hydrogen and oxygen may take place around these bolts.

It will be appreciated that the anode and cathode structures, as shown in FIG. 10 of the drawings, is also preferably provided with an extended surface area structure comprising simple threads. This extended surface area structure may take other .physical form, as for example, the anode 174 may be a perforate tube or may have various undulated surface structure providing an overall area greater than the geometric unity of the physical surfaces. Thus, the terms extended surface area used herein may define any structure of the cathode and anode elements of the invention which has surface area which is either finned and ridged, undulating or perforate to provide an extended surface area greater than the geometric unity of the structures from which the hydrogen and oxygen may be emitted.

This is obviously an advantage to provide for a very compact generator structure having optimum production capabilities in accordance with its overall size.

It will be noted that the structure of the generator, as shown in FIG. 7 of the drawings, may be capable of withstanding a flash-back explosion therein without the danger of damaging the generator. It has been found that the explosion of hydrogen and oxygen in such a generator may be self-contained without creating unduly high pressures.

It will be obvious to those skilled in the art that various modifications of the present invention may be resorted to in a manner limited only by a just interpretation of the following claims.

1. In an electrolytic hydrogen and oxygen generator the combination of: a cylindrical tank having a bottom portion; a cover for said tank having a downwardly extending cylindrical electrode portion, said first mentioned cylindrical portion of said tank having an outwardly extending flange; an outwardly extending flange of said covered portion overlying said last mentioned outwardly extending flange; a gasket between said flanges; and spring loaded means tending to force said flanges together in compressive contact with said gasket, said spring loaded means yield-able to permit said flanges to separate from said gasket when pressure in said tank is excessive.

2. In an electrolytic hydrogen and oxygen generator the combination of: the cylindrical tank having a bottom portion; a cover for said tank having a downwardly extending cylindrical electrode portion, said first mentioned cylindrical portion of said tank having an outwardly extending flange; an outwardly extending flange of said covered portion overlying said last mentioned outwardly extending flange; a gasket between said flanges; and spring loaded means tending to force said flanges together in compressive contact with said gasket, said spring loaded means yieldable to permit said flanges to separate from said gasket when pressure in said tank is excessive, a removable filler plug in said cover and a restricted outlet in said cover for hydrogen and oxygen produced in said generator.

3. In an electrolytic hydrogen and oxygen generator the combination of: a cylindrical tank member having an enclosed bottom portion; an upstanding cylindrical member conductively coupled to said bottom; a cover for said tank; a downwardly extending cylindrical member electrically coupled thereto and surrounding said upwardly extending cylindrical member; said tank adapted to .contain an electrolytic solution, said downwardly extending cylindrical portion having openings therein near the upper end of said upwardly extending cylindrical portion; an outlet in said cover internally of said downwardly extending cylindrical portion for the delivery of the mixture of hydrogen and oxygen from the generator.

4. In an electrolytic hydrogen and oxygen generator the combination of: a cylindrical tank member having an enclosed bottom portion; an upstanding cylindrical member conductively coupled to said bottom; a cover for said tank; a downwardly extending cylindrical member electrically coupled thereto and surrounding said upwardly extending cylindrical member; said tank adapted to contain an electrolytic solution, said downwardly extending cylindrical portion having openings therein near the upper end of said upwardly extending cylindrical portion; and an outlet in said cover internally of said downwardly extending cylindrical portion for the delivery of the mixture of hydrogen and oxygen from the generator, said upstanding cylindrical member having openings therethrough near said enclosed bottom portion.

5. In a generator for electrolytic production of hydrogen and oxygen the combination of: a closed bottom cylindrical casing of electrical conducting material having an upper open end; a cover of electrical conductor materials for said casing; gasket means forming a seal and electrical insulator between said upper open end of said casing and said cover; a hollow cylindrical electrode conductively coupled to said cover and suspended therefrom in said casing; an internal surface of said cylindrical electrode directed toward and in spaced relation to said internal surface of said casing; a normally lower end of said cylindrical electrode spaced from the bottom of said casing; said casing adapted to contain an ionizing solution in contact with both said surfaces; and a source of electrical energy having conductors coupled to said cover and said casing to effect operation of said casing as a cathode and said cylindrical electrode as an anode; and an outlet for said generator to conduct a mixture of hydrogen and oxygen gases therefrom; said source of electrical energy including a transformer and rectifier means; a combined frame and heat sink means thermally conductively coupled to said casing and said rectifier means for supporting said casing and rectifier means and for collecting heat therefrom.

6. In a generator for electrolytic production of hydrogen and oxygen the combination of: a closed bottom cylindrical casing of electrical conducting material having an upper open end; a cover of electrical conductor materials for said casing; gasket means forming a seal and electrical insulator between said upper open end of said casing and said cover; a hollow cylindrical electrode conductively coupled to said cover and suspended therefrom in said casing; an internal surface of said cylindrical electrode directed toward and in spaced relation to said internal surface of said casing; a normally lower end of said cylindrical electrode spaced from the bottom of said casing; said casing adapted to contain an ionizing solution in contact with both said surfaces; and a source of electrical energy having conductors coupled to said cover and said casing to effect operation of said casing as a cathode and said cylindrical electrode as an anode; and an outlet for said generator to conduct a mixture of hydrogen and oxygen gases therefrom; said source of electrical energy including a transformer and rectifier means; a combined frame and heat sink means thermally conductively coupled to said casing and said rectifier means for supporting said casing and rectifier means and for collecting heat therefrom; one electrical conductor of said source of electrical energy coupled to said frame; said casing electrically coupled to said frame; and another electrical conductor of said source coupled to said cover.

7. In a generator for electrolytic production of hydrogen and oxygen the combination of: a closed bottom cylindrical casing of electrical conducting material having an upper open end and a ridge and groove internal surface; a cover of electrical conductor materials for said casing; gasket means forming a seal and electrical insulator between said upper open end of said casing and said cover; a hollow cylindrical electrode conductively coupled to said cover and suspended therefrom in said casing; an internal ridge and groove surface of said cylindrical electrode directed toward and in spaced relation to said ridge and groove internal surface of said casing; a normally lower end of said cylindrical electrode spaced from the bottom of said casing; said casing adapted to contain aqueous electrolyte in contact with both said ridge and groove surfaces; and a source of electrical energy having conductors coupled to said cover and said casing to affect operation of said casing as a cathode and said cylindrical electrode as an anode; and an outlet for said generator to conduct a mixture of hydrogen and oxygen gases therefrom; a tubular filler neck on said cover communicating with the interior of said hollow cylindrical electrode; a removable seal cap on said filler neck; a float on said electrolyte internally of said hollow cylindrical electrode; and an electrolyte level indicating rod carried by said float and projecting upwardly in said filler neck.

8. In a generator for electrolytic production of hydrogen and oxygen the combination of: a closed bottom cylindrical casing of electrical conducting material having an upper open end and a ridge and groove internal surface; a cover of electrical conductor materials for said casing; gasket means forming a seal and electrical insulator between said upper open end of said casing and said cover; a hollow cylindrical electrode conductively coupled to said cover and suspended therefrom in said casing; an internal ridge and groove surface of said cylindrical electrode directed toward and in spaced relation to said ridge and groove internal surface of said casing; a normally lower end of said cylindrical electrode spaced from the bottom of said casing; said casing adapted to contain in contact with both said ridge and groove surfaces; and a source of electrical energy having conductors coupled to said cover and said casing to effect operation of said casing as a cathode and said cylindrical electrode as an anode; and an outlet for said generator to conduct a mixture of hydrogen and oxygen gases therefrom; said source of electrical energy including a transformer and rectifier means; a frame and heat sink means thermally conductively coupled to said casing and said rectifier means; and rods connected to said frame and extending upwardly through said cover to hold said cover and said casing together and in assembly with said frame; and electrical insulator bushings in said cover around said rods to insulate said cover from said frame and said casing.

9. In a generator for electrolytic production of hydrogen and oxygen the combination of: a closed bottom cylindrical casing of electrical conductor material having an upper open end and a ridge and groove internal surface; a sealed cover for said upper open end of said casing; a hollow cylindrical electrode suspended from said cover in said casing; an external ridge and groove surface of said cylindrical electrode directed toward and in spaced relation to said ridge and groove internal surface of said casing; a normally lower end of said cylindrical electrode spaced from the bottom of said casing; said casing adapted to contain aqueous electrolyte in contact with both said ridge and groove surfaces; and a source of electrical energy having conductors coupled to said hollow cylindrical electrode and said casing to effect operation of said casing as a cathode and said cylindrical electrode as an anode; and an outlet for said generator to conduct a mixture of hydrogen and oxygen therefrom; a tubular filler neck on said cover communicating with the interior of said hollow cylindrical electrode; a removable seal cap on said filler neck; a float on said electrolyte internally of said hollow cylindrical electrode; and an electrolyte level indicating rod carried by said float and projecting upwardly in said filler neck.

10. In a generator for electrolytic production of hydrogen and oxygen the combination of: a partially closed cylindrical casing of electrical conductor material having an open end and an extended surface area electrode means; a sealed cover for said open end of said casing; a hollow cylindrical electrode supported by said cover in said casing; extended surface are-a means of said cylindrical electrode in spaced relation to said extended surface area means of said casing; an end of said cylindrical electrode spaced from an adjacent portion of said casing; said casing adapted to contain aqueous electrolyte in contact with both said extended surface area means; and a source of electrical energy having conductors coupled to said hollow cylindrical electrode and said casing to effect operation of said casing as one electrode and said cylindrical electrode as the other electrode; and an outlet for said generator to conduct a mixture of hydrogen and oxygen from said electrodes and said casing; a filler neck on said cover communicating with the interior of said casing; a float internally of said hollow cylindrical electrode and disposed on said electrolyte; and a rod coupled to said float and extending upwardly in said filler neck; and a cap enclosing and sealing the upper open end of said filler neck.

Inventor: William A. Rhodes. Patent № 3310483 "Multicell Oxyhydrogen Generator" – granted Mar 21, 1967 (filed Nov 22, 1963)

DESCRIPTION

This invention relates to a multicell oxyhydrogen generator and more particularly to a multicell oxyhydrogen generator employing a plurality of spaced plates operating electrically in series with each other and an e1ectrolyte therebetween.

Heretofore, multicell oxyhydrogen generators having a plurality of spaced plates operating electrically in series with each other and with an electrolyte have been constructed in a manner to insulate all of the plates from each other to seal the edges of the plates to a housing to prevent electrical short-circuiting around the edges of the plates and through the electrolyte.

Such generator construction has created many mechanical complexities and sealing problems and has, additionally, further complicated the problem of maintaining a constant level of the electrolyte in all of the series operated cells. Additionally, the problem of adding makeup fluid to all of the cells and equalizing the addition and/or resultant concentration of the electrolyte has been difficult to solve.

Accordingly, it is an object of the present invention to provide a very simple multicell oxyhydrogen generator wherein a plurality of electrode plates are operated electrically in series in a tank of dielectric material having slots holding the edges of the plates; said slots being sufficiently deep to prevent short-circuiting of electrical current around the edges of the plates, thus, solving the usual sealing problem.

Another object of the invention is to provide a very simple multicell oxyhydrogen generator wherein a plurality of electrolyzing plates are operable in series with each other and with an electrolyte, thereby obviating the necessity of utilizing a step-down transformer to obtain the desired electrolyzing voltage.

Another object of the invention is to provide a multicell oxyhydrogen generator wherein a novel dielectric container holds electrodes in such a manner as to obviate the necessity of utilizing electrical insulation between the electrolyzing plates and to provide a substantially continuous conductive body of plates and electrolyte in series from one electrode at one end of the generator to an electrode at the opposite end of the generator.

Another object is to provide a very-novel multicell oxyhydrogen generator employing a plurality of spaced electrolyzing plates operable in an electrolyte and in electrical series with each other and the electrolyte whereby one surface of each plate produces hydrogen gas and the opposite surface of the plate produces oxygen gas.

March 21, 1967 W. A. RHODES 3,310,483

MULTICELL OXYHYDROGEN GENERATOR

Filed Nov. 22, 1963

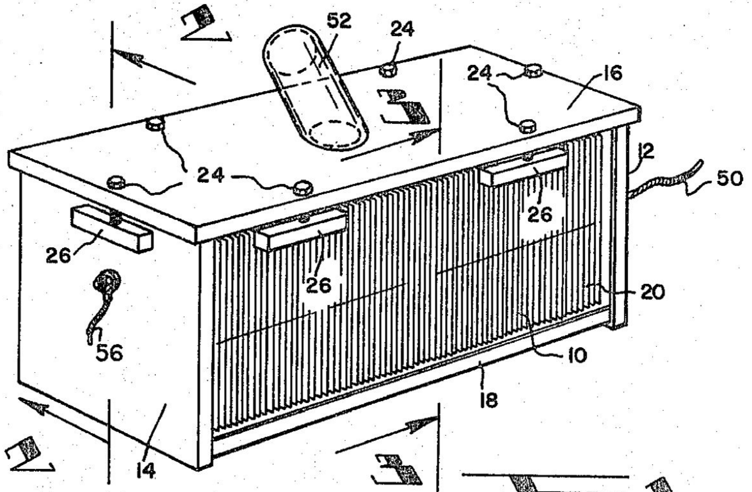

Fig. 1

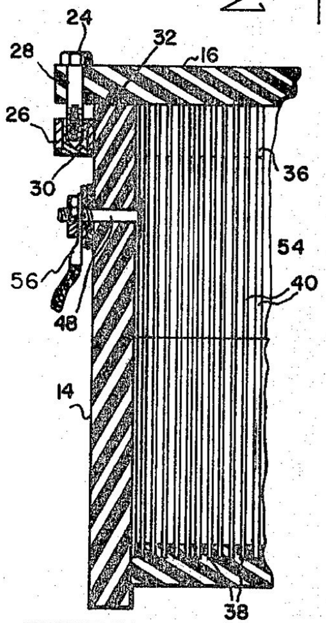

Fig. 2

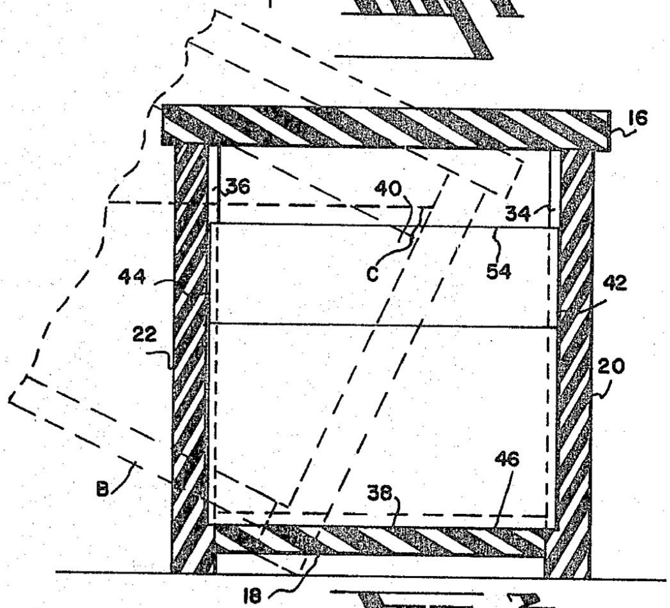

Fig. 3

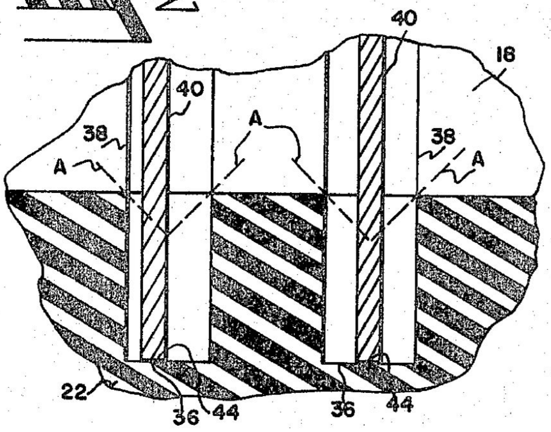

Fig. 4

INVENTOR.

WILLIAM A. RHODES

BY

Wm. H. Dean

Another object of the invention is to provide a novel multicell. oxyhydrogen, generator wherein a plurality of electrolyzing plates are disposed in spaced series with relation with each other and an electrolyte and wherein novel means is provided for periodic makeup of feed water to be added to all of the cells at an even and equal capacity.

Another object of the invention is to provide a novel multicell oxyhydrogen generator having a plurality of spaced electrolyzing plates separating respective cells therebetween and wherein the upper edges of the plates may be overrun by the electrolyte simply by tilting the .generator until the electrolyte overruns the upper edges of ‘the plates so that equalization of the volume of fluid between the plates and in the cells may be accomplished.

Another object of the invention is to provide a multi-cell oxyhydrogen generator having novel oxygen and hydrogen production and mixing directly from opposite sides of each of the electrolyzing plates in the generator and for carrying the combined gases into a common duct properly mixed for combustion.

Another object of the invention is to provide a multicell oxyhydrogen generator having a plurality of spaced plates and adjacent cells, each plate acting as an electrode for each side of each cell, each electrode being the electrical current flowing through the cross section of each chamber or cell finds a shorter and preferred path by passing through the metal of the plate instead of passing through the electrolyte around the edge of the plate.

Another object of the invention is to provide a multicell oxyhydrogen generator wherein a tank is composed of insulation material and provided with grooves in the side Walls and the bottom thereof; said grooves being spaced from each other, such that plates at their vertical and lower edges are loosely contained in the grooves in the tank, thereby providing a very simple multicell oxygen and hydrogen generating apparatus.

Further objects and advantages of the invention may be apparent from the following specification, appended claim and accompanying drawings, in which:

FIG. 1 is a perspective view of a multicell oxyhydrogen generator in accordance with the present invention;

FIG. 2 is a fragmentary sectional view of one end of the generator taken from the line 24 of FIG. 1;

FIG. 3 is a cross sectional view of the generator taken from the line 3—3 of FIG. 1 and showing by broken lines the tilting of the generator tank whereby electrolyte reaches a level above upper edges of the plates to thereby equalize the total volume of electrolyte in all of the series arranged cells; and

FIG. 4 is an enlarged fragmentary cross sectional view of a pair of spaced electrolyzing plates of the invention having their edges contained in slots in the side structure of the insulating tank of the invention and wherein electrolysis takes place upon opposite sides of the plate to produce oxygen on one side and hydrogen on the other and wherein the edges of the plates are projected a sufficient distance inwardly of the said slots to prevent short-circuiting of the electrical current around the edges of the electrolyzing plates.

As shown in FIG. 1 of the drawings, the multicell oxyhydrogen generator of the present invention comprises a generally rectangular tank .10 composed of end walls 12 and 14, a top 16, a bottom 18 and side walls 20and 22.

The end walls 12 and 14 and the bottom and side walls 18, 20 and 22 are all integral or fused together and are made of electrical insulation material, such as Lucite or the like. The top 16 is connected to the sides and ends by bolts 24 which extend downwardly through openings in the top 16 and into blocks 26 connected respectively to the sides and ends of the tank.

Referring to FIG. 2 of the drawings, it will be seen that a bolt 24 extends downwardly through an opening 28 in the top 16 and that the bolt 24 is screwthreaded in a metal bushing 30 in one of the blocks 26 which is fused or otherwise secured to the end wall 14.

In some instances, the material of the side walls, endwalls and bottom, may be Lucite or other equivalent insulating material forming a float type container.

The cover 16 is provided with a recessed gasket 32 which bears on the upper edges of the side and end walls, as shown in FIG. 2 of the drawings, to provide a gas seal at the upper end of the tank.

The side walls 20 and 22 are provided with spaced slots 34 and 36, as shown on the enlarged scale in FIG. 4 of the drawings. The bottom 18 is provided with similar slots 38, these slots as shown in FIG. 2 of the drawings, are spaced from each other and electrolyzing plates 40 are provided with edges 42, 44 and 46 disposed respectively in the slots 34, 36 and 38 of the sides 20 and 22 and the bottom 18.

The slots 34, 36 and 38 are all of substantially similar depth and correspond structurally to the description which will be hereinafter made in connection with FIG. 4 of the drawings.

As an example, the plates may be eighteen thousandths of an inch thick and the slots may be 32 thousandths of an inch wide. These dimensions may be varied in proportion to the size of the apparatus required and are only given by way of an example.

The plates 40 may be any suitable material known in the art for the purpose of electrolyzing a conventional electrolyte to produce hydrogen and oxygen, as will be hereinafter described.

Referring to FIG. 4 of the drawings, it will be seen that the slots 36 contain the edges 44 of the plates 40 and that these edges project a sufficient distance into the slots 36 so that electrolysis indicated generally by broken lines A limited to a median angle on substantially 45 degrees will not pass the edges 44, but will complete the electrical circuit through the plate 40 without a tendency of short-circuiting around the edges 44 In this manner the plates 40 and the electrolyte therebetween are forced to operate as a continuous conductor with the plates in series thereby obviating the necessity of using a step down transformer. As for example, when 120 volts alternating current is used in connection with a conventional half-wave or a full-wave rectifier, direct current of the order of 120 volts or more, when operating in series through 60 or more of the plates 40 is reduced to substantially two volts at each plate which is a desired electrolyzing voltage. The plates operate in series by reason of an electrical connection provided by a conductor 56 having a clamp terminal 48 coupled to one of the plates 40 adjacent the end plate 14 while another conductor 50 is coupled to a similar plate 40 adjacent to the end plate 12. Thus, the circuit is completed through the plates 40 in series with each other and with the electrolyte therebetween.

A particularly novel feature of the present invention is the construction of the tank holding the electrolyte and particularly the construction of this tank of insulating material and providing it with the plate edge holding slots wherein the plates are loosely supported and wherein the slots are sufficiently deep to prevent short-circuiting of the electrical energy around the edges of the plates. Thus, each electrolyzing plate 40 is caused to operate in series with the other plates and to produce oxygen on one surface and hydrogen on the opposite surface.

In the top 16, a conduit 52 is provided to communicate with the interior of the tank below the cover 16 and above the upper edges 54 of the plates 40. The electrolyte is disposed in the tank below the upper edges 54 of the plates and the level of the electrolyte in the tank may be varied to vary the effective area of the plates which correspondingly relates to power consumption and the amount of gas yield of the generator.

When it is desired to add makeup water, it may be poured through the conduit 52 and the tank may be tilted as indicated by broken lines B in FIG. 3 of the drawings, so that the electrolyte level is disposed at C above upper edges 54 of the titled plates 40. Thus, the electrolyte volume between each adjacent plate and in each cell is equalized.

The generator of the present invention when operated produces hydrogen and oxygen gas from opposite sides of each of the plates 40 and these gases rise and mix intimately at the upper edges 54 of the plates and may be carried outwardly through the conduit 52 or any other suitable conduit to a use location, such as a torch or other combustion means.

It will be obvious to those skilled in the art that various modifications of the present invention may be resorted to in a manner limited only by a just interpretation of the following claim.

I claim:

- In a multicell oxygen and hydrogen generator the combination of: a tank adapted to contain electrolyte and of electrical insulating material;
- said tank having side and bottom walls provided with parallel, spaced slots;
- a plurality of parallel electrolyzing plates disposed in said slots and loosely contained therein forming compartments therebetween the edges of said plates extending into said slot portions a sufficient distance whereby electrolysis acting at approximately 45 degrees to the edges of said slots intersect said plates inwardly of the edges thereof, thereby electrolyzing through said plates and preventing short-circuiting through the electrolyte around the edges of said plates;
- an electrode adjacent each of the opposite end walls of said tank adapted to communicate with electrolyte adjacent said plates and adapted to conduct direct current to act in series with said plates and electrolyte in the compartments therebetween;
- a cover sealed to the upper portion of said tank and having an outlet for a mixture of hydrogen and oxygen gases;
- upper edges of said plates spaced substantially below said cover forming a gas collecting chamber above said plates whereby tilting of said tank may cause electrolyte therein to pass above upper edges of said plates and equalize the volume of fluid in said compartments throughout said tank, communication between said compartments being limited to said gas collecting chamber.

Rhodes's know-how is not lost

This story has been told by many blogs and others. Here's a short one from www.hydrogen-gas-savers.com/william-a-rhodes.htm

> ***"In the 1960's, William Rhodes formed the Henes Corporation with partners who eventually ousted him. The company changed hands several times and is now known as Arizona Hydrogen Manufacturing in Phoenix, AZ, which sells welding units based on Rhodes technology that use electrolysis of distilled water to create a flame at 6,000 degrees Fahrenheit. William A. Rhodes is still living and associated with Arizona Hydrogen Manufacturing and Arizona State University, in Tempe, AZ."***

*It's thanks to Rhodes (among others) that the Arizona Hydrogen Manufacturing, Inc. (**www.azhydrogen.com**) is able to manufacture good Waterfuel welding machines → (sample photo from their website, visit to see all models and specs).*

Also based in part on the old-timers' know-how of Yull Brown and Rhodes is the Water Torch technology developed by George Wiseman of Eagle-Research Ltd. (www.eagle-research.com) such as ER1200 shown to the left.

Chapter 12. THEORY: Moray King — The Free Energy is NOT from Burning Hydrogen!

Moray B. King at the Breakthrough Energy Movement Conference, November 2012, Hilversum, Holland [source: Vimeo.com]

Watch Moray's complete presentation on Vimeo https://vimeo.com/58005057
or YouTube www.youtube.com/watch?v=pa2sjMN8sMc

Overview

This chapter is a brief version of one of Moray's many presentations on Waterfuel; this version was posted by Patrick Kelly at http://www.free-energy-info.co.uk/Chapt10.html and I further abridged it to fit this book. For free access to all of Moray's presentations and publications visit Rex Research http://rexresearch.com/kingmb/king.html

Moray King has produced a substantial document covering many aspects of Free-Energy with special emphasis on the more unusual systems and some of the difficult-to-explain things that people have discovered. As Moray's presentation has 166 pages containing many pointers to video clips and specialist web sites, this is just a brief summary of his PDF document http://www.free-energy-info.com/MorayKing.pdf and which has the uncommon feature of an icon at the top left hand corner of each page, and if you click on that icon, then additional comments can be seen. He starts with:

"One Million Water Electrolyzers"

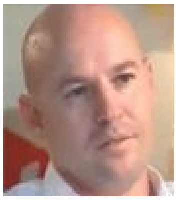

Steve Ryan, a man from Auckland, New Zealand, who was shown running a motorcycle on modified water, shown on a cynical TV video presentation http://www.youtube.com/watch?v=POJQKg9CRJc where the complete ignorance of the presenters is demonstrated yet again. Steve has disappeared from public view for a very long time now. However, Moray raises the most relevant question: ***"How can water store enough energy to make it appear to be a fuel?"*** The first step in answering this question is to realize that causing cavitation (tiny stress bubbles) in the water inside an electrolyzer, produces excess energy, and so, circulating the water inside an electrolyzer while causing cavitation in the water is a major step forward, and one which seems to indicate that the majority of the energy in HHO gas does not actually come from the hydrogen. Instead, zero-point energy gets trapped in the water when the turbulence caused by the circulation, charges the water electrostatically, raising its energy content as it circulates repeatedly through the electrolyzer.

Mark LeClair, the founder of the NanoSpire Corporation (www.nanospireinc.com), discovered a microscopic crystalline form of water which has an extraordinary energy density. This crystalline form of water is similar to the microscopic plasmoids[70] discovered by Ken Shoulders and the larger plasmoids discovered by Adamenko's team at the proton-21 laboratory in the Ukraine. When a plasmoid strikes any element, the result is transmutation of that element. The excessive energy and most unusual properties of Brown's Gas come from charged water gas clusters which are stored in a stable ring-form of the microscopic water crystals. This feature completely by-passes the standard electrolysis of water as examined by the great Michael Faraday where more energy is needed to split water than can be regained when the resulting gas mixture is burned. This is an entirely different process and it shows why water can indeed act as a fuel. If you search for "water fuel" on YouTube, more than 41,000 videos can be found, most of which are demonstrating electrolyzers, which shows that there is a growing awareness of the potential of water as a fuel. There are many commercial electrolyzers available.

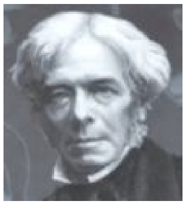

---

[70] Plasmoid: Turbulent plasma is a vortex ring; further described next page.

Brown's Gas (HHO) has most unusual properties as demonstrated by Denny Klein's use of it in a welding torch as seen on YouTube https://youtu.be/6Rb_rDkwGnU and Denny has also run his car with water appearing to be the only fuel – the power comes from the zero-point energy field but that energy is transported by the water.

Nearly Everyone Believes The Energy is from Hydrogen

Surprisingly, nearly everyone who is working with, or experimenting on the gas produced by electrolysis, believes that the resulting energy comes from the hydrogen in the gas mix, while the reality is that this is not actually the case. Brown's Gas has a cool flame of just 130°F (water boils at 212°F), and yet that same flame can vaporize tungsten which requires more than 10,000°F and burning Hydrogen will never, ever, reach that temperature. Brown's Gas can also dramatically reduce radioactivity in radioactive materials and burning hydrogen can't do that. Also, when Brown's Gas is analyzed in a high-tech laboratory, very little hydrogen is found and instead there are gaseous water clusters with excess electrons.

These charged water gas clusters have the same strange energetic effects that the plasma-charged have and that appears to be a microscopic form of ball lightning, studied extensively by Ken Shoulders who named them "Exotic Vacuum Objects" or "EVO" when he became convinced that their excess energy was being drawn in from the zero-point energy field of 'the vacuum'. These water gas clusters have a self-organized grouping of matter, plasma and zero-point energy. The typical grouping caused by this turbulent plasma is a vortex ring called a plasmoid (which has often been proposed as a model for ball lightning):

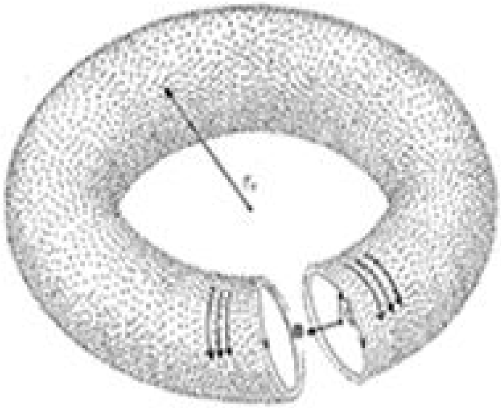

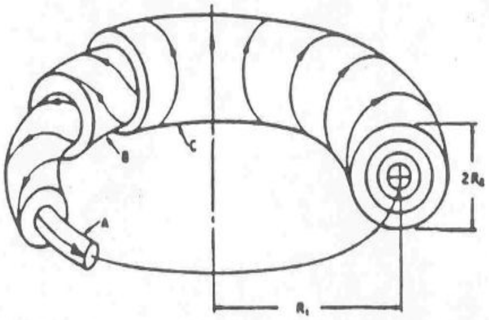

In a plasmoid, the electrons and ions spiral around the vortex ring and the force-free vortex creates a natural stability which sustains the plasmoid shape. These charge clusters can be produced quite easily as shown by Ken Shoulders in his US Patent № 5,018,180 of 1991 where he shows that an abrupt electric discharge from a capacitor through a sharp pointed electrode on to a dielectric surface creates a charge cluster which travels on the surface of the dielectric to the anode. It appears to be a micron-sized form of ball lightning and it can punch a hole through the 'witness' plate, leaving a crater made by a high-energy event. The patent is well written and describes many possible applications of his discovery.

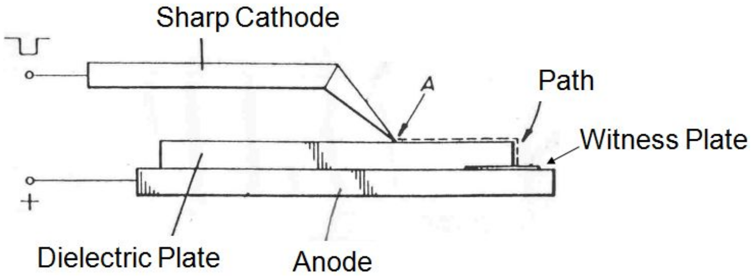

The Exotic Vacuum Object formed by this process is believed to contain 100,000,000,000 electrons plus some 100,000 ions, giving it a charge-to-mass ratio similar to an electron and a really interesting fact is that it contains more energy than the energy which was stored in the capacitor which created it. These charge clusters adhere to dielectrics and they can remain for a long time. Many of them can clump together into a formation like a necklace. They can create holes through high melting-point ceramics such as aluminum oxide. Ken believes that the creation of these holes in ceramics is caused by the disruption of the electrons in the ceramic and so the hole 'melted' through the ceramic is not actually produced by heat. He has performed experiments which demonstrate the transmutation of one element into another and others which show radioactive materials being converted into benign elements.

Water gas clusters have the same characteristics as Ken's Exotic Vacuum Objects and they cause the most unexpected effects of using Brown's Gas where the cool flame (266°F) does not boil water (which needs 212°F to boil) www.watertorch.com, and yet, that same flame can vaporize Tungsten which requires 10,031°F, mind you, the Brown's Gas flame ***does not vaporize Tungsten by heating it above 10,000°F but instead, does it by disrupting the bonding of the molecules in the metal***. Here are some comparisons:

Tungsten	Melt	6,192°F	3,422°C
	Vaporize	10,031°F	5,555°C
Brown's Gas		**266°F**	**130°C**
Torches	Acetylene	5,972°F	3,300°C
	Hydrogen arc	7,232°F	4,000°C
	Cyanogen	8,477°F	4,525°C
	Dicyanacetylene	9,009°F	4,987°C

This heating can't possibly come from burning hydrogen. Some tests produce interesting results. For example, fill a balloon with the gas produced by electrolysis and leave the balloon sealed for some time. The tiny hydrogen atoms and molecules can, and do, escape through the material of the balloon, causing it to fall to the ground. But, the contents remaining in the balloon still produces a burning flame when pushed out through a small tube and lit. A similar experiment is to fill a paper bag with the gas. Seal the bag and leave it for twelve hours to allow the hydrogen to escape. What remains in the bag is a gas which is heavier than air and which can be ignited.

George Wiseman: Three Types of Bubbles

George Wiseman (www.eagle-research.com) is a leading Brown's Gas researcher who has found that Brown's Gas burns downwards in an imploding ring. In 2008, Chris Eckman measured the characteristics of Brown's Gas at Idaho State University. The measurements showed that there was very little hydrogen (monatomic or diatomic) present. Instead, the gas was found to be a form of water with excess electrons, effectively, a gas which was neither water vapor nor steam. When ignited, the flame temperature was found to be 266°F or 130°C. *[“Extraordinary Technology”, Vol.2(6), pp 15-25, 2008].*

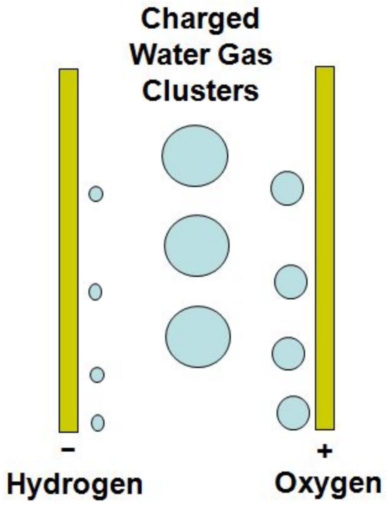

← When using his acrylic electrolyzers, George Wiseman has made an observation which he says is never mentioned in any textbook describing electrolysis.

Between the electrolysis electrode plates which have a wide spacing of more than 10 mm, three sets of bubbles are produced. Hydrogen is produced on the negative electrode plate. Oxygen is produced on the Positive electrode plate. But, in the middle of the gap between those electrode plates a third set of bubbles is generated. Many researchers believe that these additional bubbles form the most energetic component of the gas – the charged water gas clusters. This is the Electrically Expanded Water (ExW) described in Chapter 5. Watch a 15-second video showing the ExW forming: www.eagle-research.com/resources/BG/bgb1/ExWformation.MPG

Bob Boyce: Two Colliding Jets

Bob Boyce has made a similar observation, noting that when electrolysis first starts, there are two jets which start from the plates and collide in between the plates where the middle bubbles are formed.

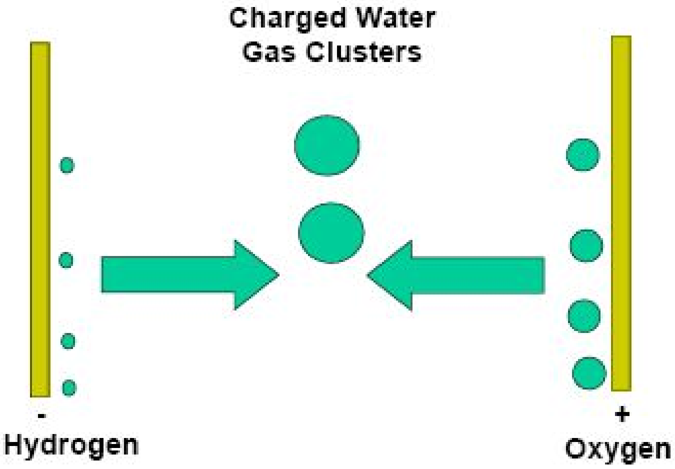

Suartt & Gourley: Harvest Middle Bubbles

Ted Suartt and Rob Gourley (www.wateriontechnologies.com) have not only made the same observation, but have developed a process and applied for a patent where they intentionally harvest just the middle set of bubbles:

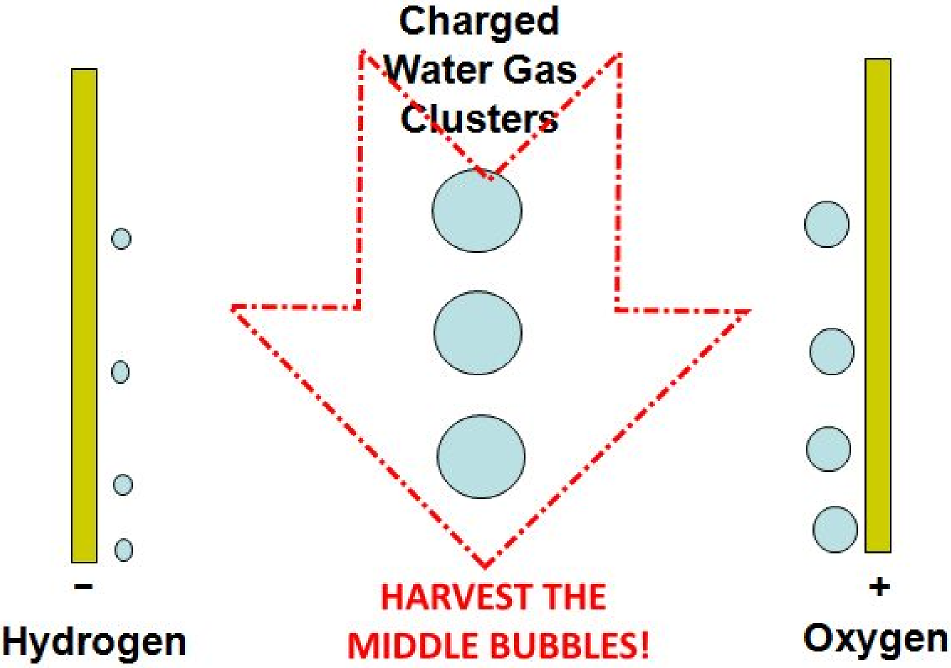

Suartt and Gourley realized that the dominant electrolyzer gas was not Hydrogen, and claiming that they are the first to discover this, named the gas after themselves as "SG Gas". Their extraction process involves widely separated electrode plates and a method of extracting the gas bubbles produced in the middle region between those two plates and excluding the hydrogen and the oxygen produced. They have investigated the properties of water infused with the gas and claim that it has health benefits. They state that Rhodes Gas and Brown's Gas are both "dirty cocktails" which include H_2 or O_2.

Brown's Gas Anomalies

The anomalies of Brown's Gas are similar to those of plasma charge clusters (Ken Shoulders' EVOs). It adheres to matter and is electrically polarized. It gives an electric shock if it implodes to form water again. The isolated gas tends to implode instead of explode in piston experiments. However, if air is added to the mixture, the air is heated and that can cause overall expansion. In a welding torch it has a cool flame but it can vaporize tungsten. The flame cuts cleanly through solid, high melting-point materials including wood and ceramics, can weld dissimilar metals together and can even weld steel to clay brick. The claims of neutralizing radioactive materials as well as the transmutation of elements are extraordinary.

Todd Knudston comments on these properties at www.amasci.com/freenrg/hydroxy.html

Vernon Roth: Element Transmutation

At the 2011 Tesla Conference, Vernon Roth announced that he has observed element transmutation in his electrolysis cell.

This is validated by George Wiseman: www.youtube.com/watch?v=_1iq8XnoMxU

Mark LeClair: Water Crystal Carves Trenches

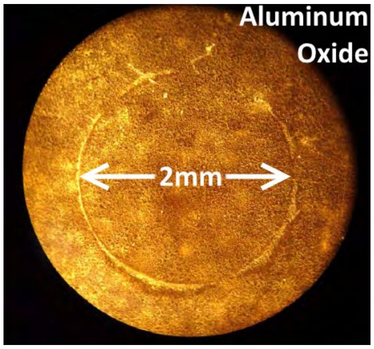

Mark LeClair can explain how water cavitation creates microscopic craters in metallic surfaces, carves trenches in high melting-point ceramics, transmutes elements, and produces excess energy. Cavitation bubbles have been studied and they have been shown to produce unexpected excess energy.

Sonoluminescence occurs when water mixed with an inert gas such as argon or xenon, is excited by ultrasonic waves. A blue light is emitted as each bubble collapses suddenly and symmetrically. If that blue light were produced by a heating effect, then the bluish spectrum would indicate temperatures of over 10,000°Kelvin, which caused many scientists to suggest that it might be used for hot fusion.

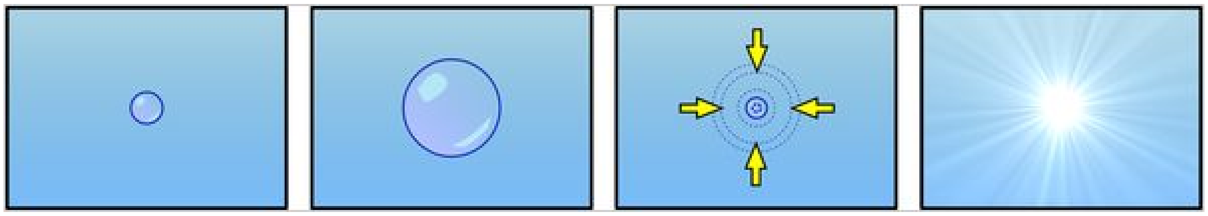

Nobel laureate, Julian Schwinger, suggested instead that the light is caused by the Zero Point Energy[71]. Here, the abrupt scalar compression of the bubble walls activates a Zero Point Energy coherence, emitting the blue light at a far lower temperature. Mark LeClair has four patents on controlled cavitation (typically for the precision cutting of materials): US Patents 6932914, 6960307, 7297288 and 7517430.

Controlled Cavitation

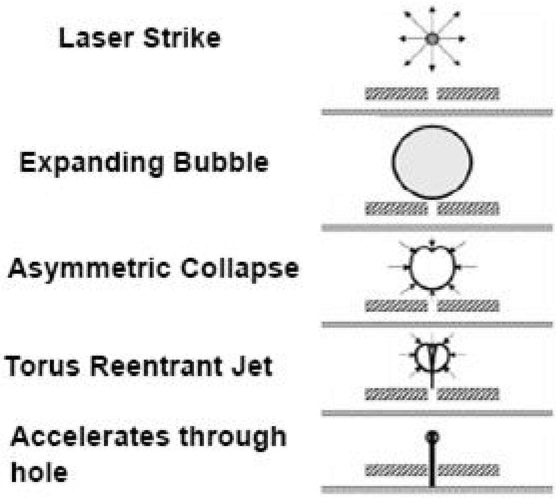

Target Cavitation

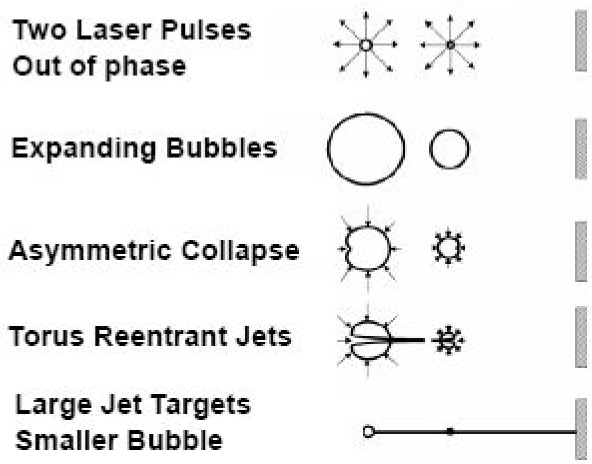

Cavitation bubbles form in the low-pressure region behind any rapidly moving surface in water. Ship's screws are known to create cavitation bubbles and being damaged by them:

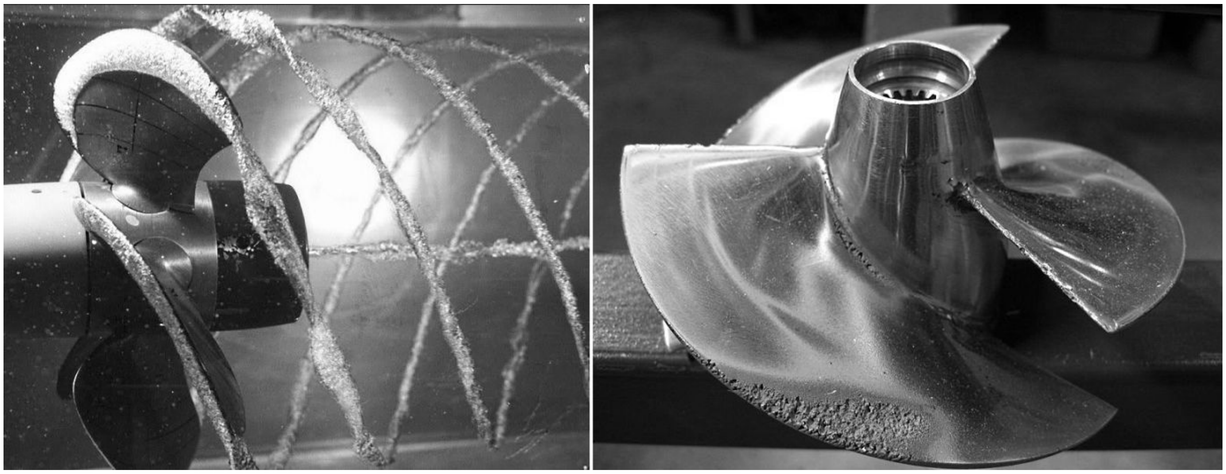

However, the most useful application of cavitation is inside an electrolyzer. Archie Blue raised the effectiveness of his electrolyzer by blowing air upwards through the electrolyte. The technique can be applied to many different electrolyzer designs. The electrode plates should have a rough clean surface with a tiny inter-plate gap of less than one millimeter. A gap that small allows the electrolysis gas to cause cavitation.

---

[71] See 'Zero Point Energy' in the Glossary.

The electrical stimulation can use pulsed DC waveforms but with minimal current and electrolyte (remember that we are not trying to make hydrogen). Circulating the water rapidly can charge it electrostatically and possibly even enough to allow the removal of the external DC pulsing. There are many ways to produce cavitation in water: make electrolysis gas in narrow gaps, blow air through the electrolyzer, create a Venturi vacuum, vibrate the water by mechanical, acoustical or ultrasonic means, oscillate an electric field via a toroidal coil or via pulsed waveforms. Here, charged or polarized clusters or bubbles will oscillate with the field causing turbulence and cavitation.

When a cavitation bubble collapses near a hole or irregularity, it forms a torus and all of the energy of the collapsing bubble gets concentrated into a re-entrant jet. The extreme pressure in the jet creates a new solid-state of water, a water crystal with a plasma bow shock wave which draws in Zero-Point Energy. If they collide, water crystals can form small rings, trapping the energy in a meta-stable torus form. This is the seed of the charge water gas cluster. When ignited, the ring breaks to re-launch the LeClair effect water crystal or alternatively, becomes a plasmoid Exotic Vacuum Object, either of which have excess energy.

Rapidly circulating water through an electrolyzer causes numeric energetic effects. It charges the water by electrostatic rubbing, it causes turbulence and cavitation as it flows through the tight rough gaps, it can vibrate the plates producing reed cavitation and best of all, cycling the water repeatedly through the electrolyzer integrates its energy content, producing an ever increasing energy level. With water which is sufficiently charged, spraying it as a mist into the carburetor of an engine can give the illusion that water is a fuel.

Moray King Provides Replication Tips

[Source: "Water Electrolyzers and the Zero-Point Energy" by Moray B. King, 2011]

This paper was motivated by the apparent success of the researchers and hobbyists in the "HHO community." *They have been demonstrating unusual energy anomalies and have been trying to explain them in terms of hydrogen production.* Those that are scientifically trained realize that hydrogen cannot account for what is claimed, and thus the discussion groups on the web are engaged in vituperative[72] argument. In a sense, both sides are right: hobbyists appear to be demonstrating energetic anomalies and hydrogen is not the source.

The hypothesis offered is that the single-duct electrolyzers are producing charged water gas clusters, which is the dominant energetic component instead of hydrogen. ***The electrolyzers that yield the largest energy anomalies appear to make more charged water clusters and less hydrogen.*** From the study of the disclosures by many inventors, the following characteristics seem to make favorable electrolyzers:

---

[72] Vituperative: full of harsh abusive criticism.

- Clean, rough electrode surface
- Small gap between the electrodes
- Circulate or vibrate the water
- Minimum electrolyte (typically potassium hydroxide or sodium hydroxide)
- Driving electrolyzer with pulsed DC square waves
- High voltage spike on the leading edge of the square wave
- Recycling the exhaust water back to the electrolyzer
- Also it appears that Eardley recently discovered a significant improvement by “pickling” the stainless steel plates in hydrochloric acid to make a microscopically rough surface, and rapidly circulating the water through the inter-electrode gaps to charge it.

Since hobbyists typically do not have the equipment to measure the constituents of the gas produced from their electrolyzers, the academic community can help resolve what is happening by an orderly research program. Since the one energetic anomaly that is well established is the vaporization of tungsten by the Brown’s gas welding torch, the first step is to confirm this. The second step is to analyze the content of Brown’s gas, and then use the appropriate techniques to produce the pure form of the charged water gas. Analyze the gas to show there is no hydrogen content, and then reconfirm that it still exhibits the welding torch anomalies. At this point the scientific community would have a pure energetic anomaly to study: a form of water that appears to “burn” with an extraordinary coherent energy content.

The second phase would be to investigate the energy content of the pure water gas. If it runs a generator, then the generator’s output power and the electrolyzer’s input power can be measured. If excess energy is measured, then a closed loop system can be attempted. If a closed loop system involving a (internal combustion engine) generator can idle for a significant time, then a new energy source would be demonstrated. At this point it would be valid for the academic community to consider the zero-point energy hypothesis as a possible explanation.

It is King’s hope that the scientific community would be willing to engage in such a research program. ***It just might be that the HHO community has inadvertently discovered a surprisingly simple means to tap the zero-point energy.***

The Broader Picture

Moray tries to answer: “Can the Zero-Point Energy Become an Energy Source?”

- Watch on Vimeo: https://vimeo.com/80771820
- Same lecture on YouTube: https://www.youtube.com/watch?v=WEb2xMBRiHo

Moray suggests simple tests to see and show that Brown's Gas is NOT hydrogen

Explanation by an Australian experimenter 'zaneaussie' (open-source-energy.org):

> ***Use ordinary electrolysis and fill a paper bag with HHO and leave it for 12 hours. The paper bag is obviously incapable of containing hydrogen and it will escape and evaporate. However 12 hours later we are still left with a HEAVIER THAN AIR gas. This gas can be poured from the paper bag and into a glass and can be ignited at the bottom of the glass. This is Brown's Gas. Now im quite happy to go into a discussion about what this substance might be and why it acts like it does but the main point of this was to point out to people who may not have been aware of these differences.***

Moray: "Burning Hydrogen Cannot Explain This"

"Another Energetic Gas is Present - Empirical Evidence"

<table>
<tr><td colspan="3">WARNING: THESE ARE HIGHLY FLAMMABLE GASES – all tests must be performed with extreme caution – and at your own risk! If you're not sure what you're doing, seek professional advice. (~Ozzie)</td></tr>
<tr><th>BALLOON TEST</th><th>PAPER BAG TEST</th><th>GLASS POURING TEST</th></tr>
<tr>
<td>1. Fill balloon with gas
2. Wait, hydrogen leaks away
3. Balloon falls to ground
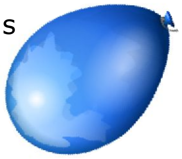
4. Still exhibits balloon torch:
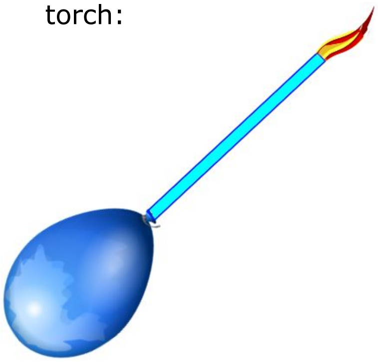</td>
<td>1. Fill paper bag with gas
2. Seal bag shut
3. Wait 12 hours, hydrogen vents away

4. Open bag
5. Heavier than air gas remains
6. Gas can be ignited!</td>
<td>1. Gas is heavier than air
2. It can be poured from one glass to another

3. Ignite gas at bottom of glass</td>
</tr>
</table>

Chapter 13.

PROOF: The Big Boys Have Known About Waterfuel for Ages

Hydrogen Assisted Combustion—Research Papers

There are many hundreds, if not thousands of technical papers and scientific research papers validating the benefits of supplemental hydrogen for the improvement of combustion, both in gasoline and Diesel engines, clearly showing a consistent realization by the experts and scientists – supplemental hydrogen IS EFFECTIVE for the reduction of engine exhaust emissions AND for the improvement of burn characteristics (and thereby economy) of petroleum based fuels. If the following statement sounds fierce and non-compromising, it is simply because it really is fierce and non-compromising:

> IF SOMEBODY ASKS YOU "WHERE IS THE PROOF???" THEN HE'S ASKING OUT OF IGNORANCE AND SHOULD BE REFERRED TO THE **TRUCKLOADS OF EVIDENCE** PRESENTED HERE. BUT IF HE STILL INSISTS THAT THERE IS NO SCIENTIFIC EVIDENCE TO WATERFUEL, IT IS ***YOU*** WHO MUST REALIZE THAT YOU'RE DEALING WITH A BLIND MAN – *try the methods outlined in Chapter 4.*

GOOD NEWS

Compelling evidence was found that NASA, the US Patent Office, U.S. Dept. of Transportation, and Detroit, as well as scientists from around the World, have all agreed that Supplemental Hydrogen/Brown's Gas has the potential to improve Fuel Efficiency, reduce harmful emissions and allow leaner operation of Internal Combustion Engines.

The list below is only a partial collection of references regarding Supplemental Hydrogen/Brown's Gas, from official publications of NASA (National Aeronautics and Space Administration), DOT (United States Department of Transportation), USPTO (United States Patent and Trademark Office) as well as other Patent Offices, JPL (Jet Propulsion Laboratory, California Institute of Technology), ***universities*** and surprisingly, "Detroit" itself (namely, The Society of Automotive Engineers based in the city of Troy, Michigan, USA). Obviously not all documents are saying exactly the same thing, but the overall picture is clear — SUPPLEMENTAL HYDROGEN/BROWN'S GAS CAN GIVE US:

1- Fuel Efficiency due to better combustion of any grade fuel,
2- Less emissions due to fuller combustion, and
3- Leaner operation possible – with cleaner emissions.

Compelling Evidence

The documentation listed in this book has at least 1,000 pages of official research publications, plus more than **5,000 US/International Patent pages** (see Chapter 20). You may add the 977 pages of Tom Bearden's 'Energy From The Vacuum' book and many more. The bottom line totals well over **10,000 pages** of scientific evidence!

And at this time of writing, it seems, documented evidence of the validity of Waterfuel AS WELL AS new and improved routes to get there, are piling up faster than ever before. You don't have to believe everything. I don't automatically believe anything either. However, minimally there is more than enough material here to show you that Waterfuel is not the "invention" of one charlatan or a couple of backyard tinkerers, but a very well researched, very well documented field of science that keeps growing.

Hydrogen is now 392 years old. But we didn't always have modern-time engines. The timeline of events provided in Chapter 34, coupled with the history of approved Patents given in the book (1863 to 2017 = **154 years**) shows ***that Waterfuel, for engines and industry, is NOTHING NEW either***. In fact, it's been 102 years IN ENGINES.

Waterfuel technology is not only well known across the boards, from NASA and DOT (U.S. Department of Transportation) to universities, individual researchers and leading engineering groups from around the world. It is also part of the knowledge of many governments around the world, as is evidenced by the many countries sending Waterfuel Patents to be registered with the US Patent office:

- Australia
- New Zealand
- England
- Japan
- Switzerland
- Germany
- Spain
- Canada
- Taiwan
- Korea
- Philippines
- The Netherlands.

Add to it the official documentation by scientists from China, Israel, Hungary, Germany, Spain, Turkey, and you get a very world-wide picture.

In this book you have links and references to the best globally-organized evidence there is to date. One that I'd like to highlight for you right now is a peer-review by Mr. Eric Kreig, a well-known skeptic of several Free-Energy technologies. Here's a YouTube videotaped evidence of him ***actually verifying*** the claims of Waterfuel company *Hydrogen Assist Development:* www.youtube.com/watch?v=zFFoe7C4K_g

Embrace yourself, the party has just begun!

THE SMOKING GUN

DEFINITION

The term "smoking gun" originated in the 1893 Sherlock Holmes story "The Gloria Scott." It was and still is a reference to an object or fact that serves as ***conclusive evidence*** of a crime or similar act. It originally came from the idea of finding a smoking (hence very recently fired) gun on the person of a suspect wanted for shooting someone, which in that situation would be nearly unshakable proof of having committed the crime.

The meaning has since then evolved in uses completely unrelated to criminal activity: for example, a scientific evidence which is highly suggestive in favor of a particular hypothesis is sometimes called ***"smoking gun evidence."***

QUESTION

- "Has all this Waterfuel technology been known?"

Or, you can sharpen the question:

- "Has Waterfuel technology been known to those who were supposed to know?"

ANSWER presented below in chronological order:

101+Year Old Patents: "Ancient" Waterfuel in Automobiles

Inventor: Charles H. Frazer. US Patent 1,262,034, Granted 1918, Filed 1916[73]

This is the oldest Waterfuel patent I have found ***for vehicle use*** — but as you'll be able to see in the next pages, the American inventor Charles H. Frazer writes as if these principles were nothing new back in 1916!

Note the use of the term "Hydro-Oxygen Generators" at the beginning of the textual part to describe the entire Waterfuel industry of those days (my interpretation).

The inventor describes the purpose of the device:

> ***"In this manner, a very low grade fuel may be used and by properly setting the valves, the proper supply of gases may be added to render the fuel thoroughly combustible."***

He also stresses the benefit of eliminating the buildup of carbon deposits due to unburned fuel. Also noteworthy is the design of the cell – Frazer's Hydro-Oxygen Generator – that according to the Patent drawings seems to do a lousy job on separating the hydrogen from the oxygen. And as we know today that's a good thing! Because this way Frazer was getting more Brown's Gas than he realized, in both outlets 20 and 21.

The next three pages display this entire Patent.

---

[73] It wasn't just vehicles! Because 1916 was also the year when Physics & Electrical Engineering Professor *Howard Monroe Raymond* (1872–1943) published his work **'Oxy-Hydrogen Welding'** in American Technical Society, Modern Shop Practice, Vol.1, that you can read in Chapter 23.

C. H. FRAZER.
HYDRO OXYGEN GENERATOR.
APPLICATION FILED JUNE 30, 1916.

1,262,034. Patented Apr. 9, 1918.

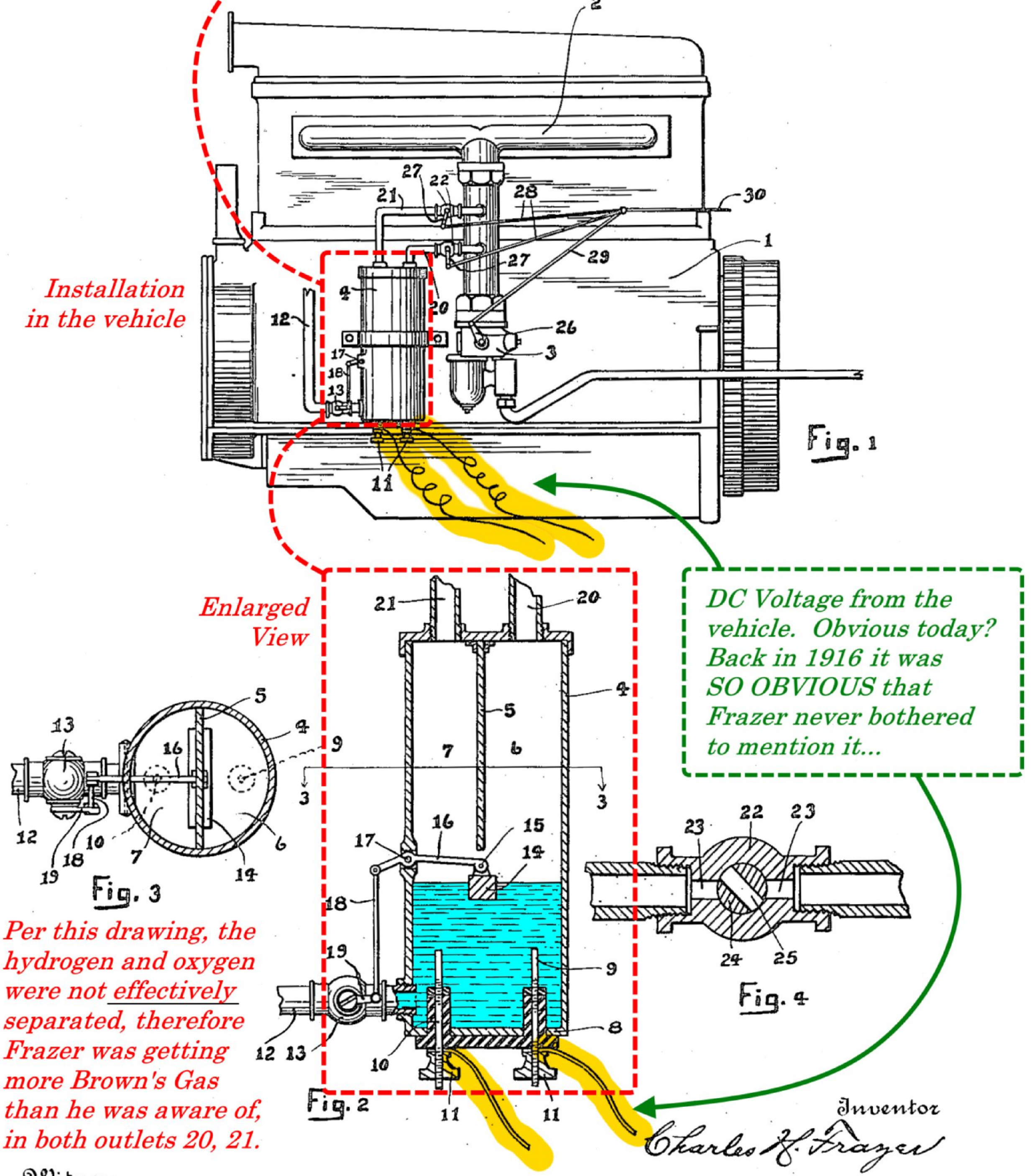

Installation in the vehicle

Enlarged View

DC Voltage from the vehicle. Obvious today? Back in 1916 it was SO OBVIOUS that Frazer never bothered to mention it...

Per this drawing, the hydrogen and oxygen were not effectively separated, therefore Frazer was getting more Brown's Gas than he was aware of, in both outlets 20, 21.

Inventor
Charles H. Frazer

Witness
R. M. McCormick
A. L. Phelps

By

C. C. Shepherd
Attorney

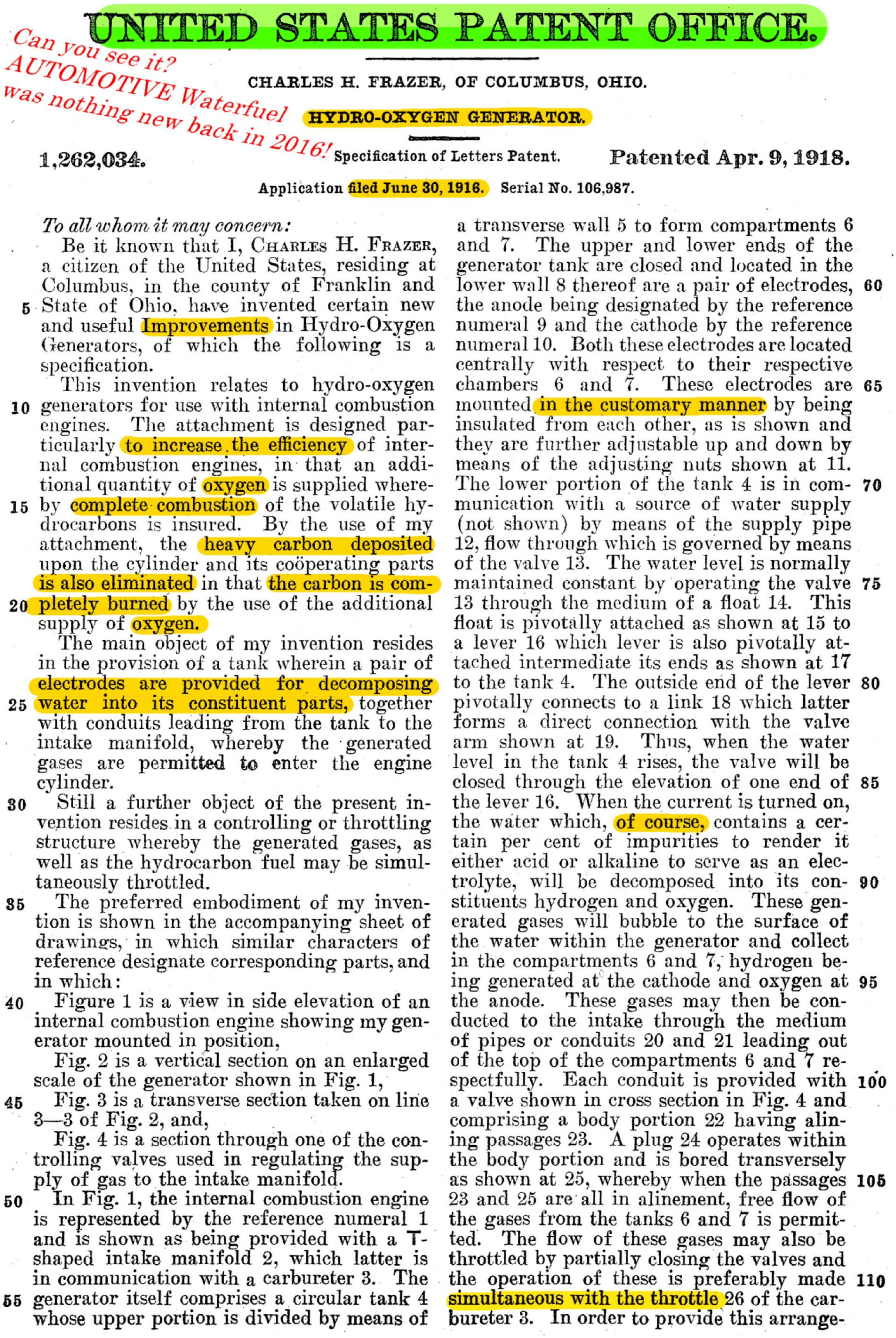

Can you see it?
AUTOMOTIVE Waterfuel
was nothing new back in 2016!

UNITED STATES PATENT OFFICE.

CHARLES H. FRAZER, OF COLUMBUS, OHIO.

HYDRO-OXYGEN GENERATOR.

1,262,034. Specification of Letters Patent. Patented Apr. 9, 1918.

Application filed June 30, 1916. Serial No. 106,987.

To all whom it may concern:

Be it known that I, Charles H. Frazer, a citizen of the United States, residing at Columbus, in the county of Franklin and State of Ohio, have invented certain new and useful Improvements in Hydro-Oxygen Generators, of which the following is a specification.

This invention relates to hydro-oxygen generators for use with internal combustion engines. The attachment is designed particularly to increase the efficiency of internal combustion engines, in that an additional quantity of oxygen is supplied whereby complete combustion of the volatile hydrocarbons is insured. By the use of my attachment, the heavy carbon deposited upon the cylinder and its coöperating parts is also eliminated in that the carbon is completely burned by the use of the additional supply of oxygen.

The main object of my invention resides in the provision of a tank wherein a pair of electrodes are provided for decomposing water into its constituent parts, together with conduits leading from the tank to the intake manifold, whereby the generated gases are permitted to enter the engine cylinder.

Still a further object of the present invention resides in a controlling or throttling structure whereby the generated gases, as well as the hydrocarbon fuel may be simultaneously throttled.

The preferred embodiment of my invention is shown in the accompanying sheet of drawings, in which similar characters of reference designate corresponding parts, and in which:

Figure 1 is a view in side elevation of an internal combustion engine showing my generator mounted in position,

Fig. 2 is a vertical section on an enlarged scale of the generator shown in Fig. 1,

Fig. 3 is a transverse section taken on line 3—3 of Fig. 2, and,

Fig. 4 is a section through one of the controlling valves used in regulating the supply of gas to the intake manifold.

In Fig. 1, the internal combustion engine is represented by the reference numeral 1 and is shown as being provided with a T-shaped intake manifold 2, which latter is in communication with a carbureter 3. The generator itself comprises a circular tank 4 whose upper portion is divided by means of a transverse wall 5 to form compartments 6 and 7. The upper and lower ends of the generator tank are closed and located in the lower wall 8 thereof are a pair of electrodes, the anode being designated by the reference numeral 9 and the cathode by the reference numeral 10. Both these electrodes are located centrally with respect to their respective chambers 6 and 7. These electrodes are mounted in the customary manner by being insulated from each other, as is shown and they are further adjustable up and down by means of the adjusting nuts shown at 11. The lower portion of the tank 4 is in communication with a source of water supply (not shown) by means of the supply pipe 12, flow through which is governed by means of the valve 13. The water level is normally maintained constant by operating the valve 13 through the medium of a float 14. This float is pivotally attached as shown at 15 to a lever 16 which lever is also pivotally attached intermediate its ends as shown at 17 to the tank 4. The outside end of the lever pivotally connects to a link 18 which latter forms a direct connection with the valve arm shown at 19. Thus, when the water level in the tank 4 rises, the valve will be closed through the elevation of one end of the lever 16. When the current is turned on, the water which, of course, contains a certain per cent of impurities to render it either acid or alkaline to serve as an electrolyte, will be decomposed into its constituents hydrogen and oxygen. These generated gases will bubble to the surface of the water within the generator and collect in the compartments 6 and 7, hydrogen being generated at the cathode and oxygen at the anode. These gases may then be conducted to the intake through the medium of pipes or conduits 20 and 21 leading out of the top of the compartments 6 and 7 respectfully. Each conduit is provided with a valve shown in cross section in Fig. 4 and comprising a body portion 22 having alining passages 23. A plug 24 operates within the body portion and is bored transversely as shown at 25, whereby when the passages 23 and 25 are all in alinement, free flow of the gases from the tanks 6 and 7 is permitted. The flow of these gases may also be throttled by partially closing the valves and the operation of these is preferably made simultaneous with the throttle 26 of the carbureter 3. In order to provide this arrangement, each valve plug is provided with an operating arm 27 to each of which is pivotally connected a reach rod 28. A reach rod 29 is also connected to the arm of the throttle valve 26 and these are in turn pivotally connected with a common operating rod 30 leading to any convenient point of operation, such as the dash of a motor vehicle, or preferably to the ordinary throttle control mechanism.

It will thus be apparent that when the curernt is thrown on, hydrogen and oxygen will be generated by decomposing the water within the tank 4. These gases rise and are collected in the chambers 7 and 6 from where they are permitted to enter the intake manifold by passage through the pipes 21 and 20. The flow through these pipes is regulated by the valve structure shown and the regulation of these valves is effected simultaneously with the engine throttle valve. By the addition of the separate gases, I am thus enabled to enrich any hydro-carbon fuel which the carbureter may handle. In this manner, a very low grade fuel may be used and by properly setting the valves 22, the proper supply of gases may be added to render the fuel thoroughly combustible.

What I claim, is:

1. The combination with the intake of an internal combustion engine and its carbureter, of a generator tank, positive and negative electrodes within said tank, a water supply pipe leading to said tank, means for maintaining a constant level in said tank, and a pair of outlet conduits leading from said tank to said intake between the engine and carbureter.

2. The combination with the intake of an internal combustion engine and its carbureter, of a generator tank, a dividing wall dividing the upper portion of said tank into a pair of compartments, positive and negative electrodes in the lower portion of said tank, a water supply pipe leading into the lower portion of said tank, means for maintaining a constant level in said tank, and an outlet conduit leading from each compartment into said intake between the engine and carbureter.

3. The combination with the intake of an internal combustion engine and its carbureter, of a generator tank, a dividing wall dividing the upper portion of said tank into a pair of compartments, positive and negative electrodes in the lower portion of said tank, a water supply pipe leading into the lower portion of said tank, means for maintaining a constant level in said tank, an outlet conduit leading from each compartment into said intake between the engine and carbureter, a controlling valve in each of said conduits, a throttle valve for said intake, and means for simultaneously controlling all of said valves.

4. The combination with the intake of an internal combustion engine and its carbureter, of means for generating hydrogen and oxygen, and means for leading said gases to said intake between the engine and carbureter.

5. The combination with the intake of an internal combustion engine and its carbureter, means for electrically decomposing water into hydrogen and oxygen, means for leading said gases to said intake between the engine and carbureter, and means for regulating the amount of flow of said gases to said intake.

In testimony whereof I affix my signature in presence of two witnesses.

CHARLES H. FRAZER.

Witnesses:
C. C. SHEPHERD,
A. L. PHELPS.

How did a car look like in Frazer's days? This 1916 Apperson "Jack Rabbit" touring car was photographed by Doug W. of RemarkableCars.com at the Henry Ford Museum in Dearborn, Michigan, USA

Chapter 17 below has the scientific proof from 1907, 1986 and 1998 that this 1916 invention is practical and can be developed.

1,226,500.

G. FUEHLER.
WATER EXPLOSION ENGINE.
APPLICATION FILED AUG. 9, 1916.

Patented May 15, 1917.

Fig. 1.

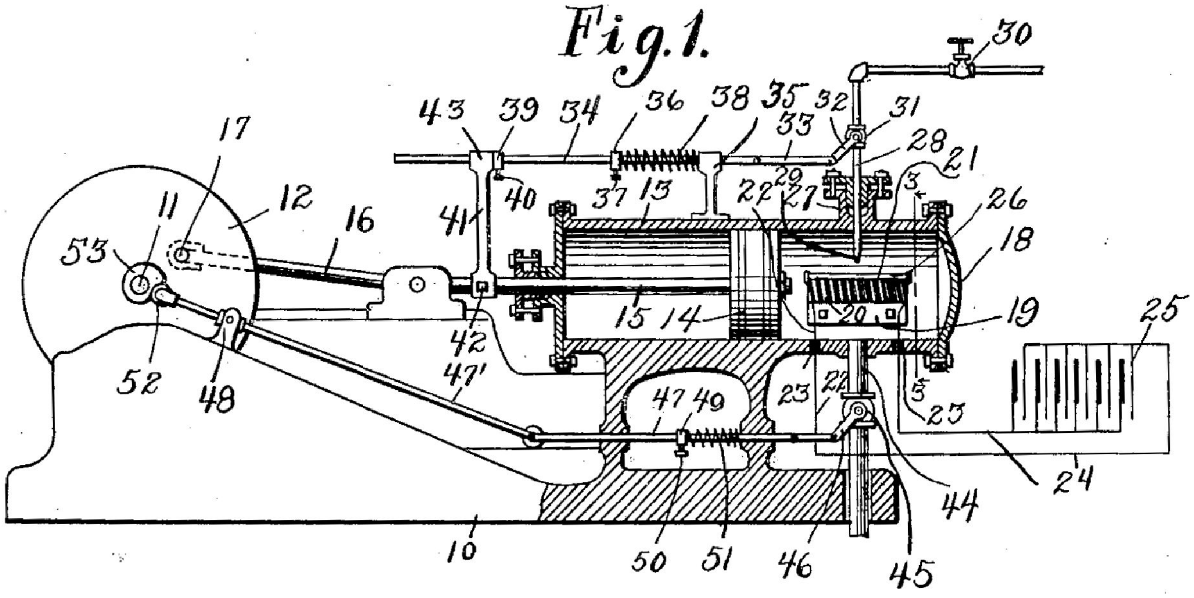

Fig. 2.

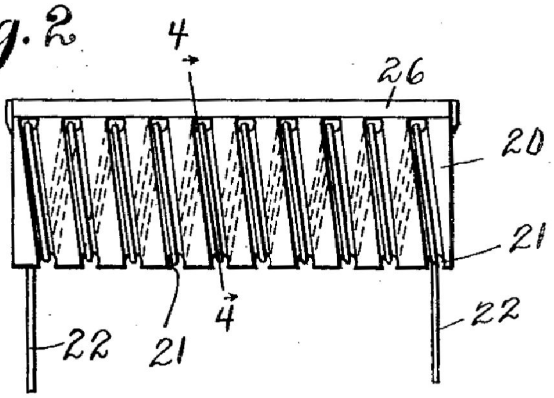

Fig. 3.

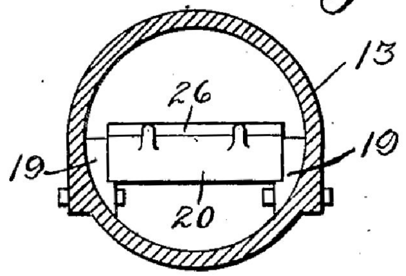

Fig. 4.

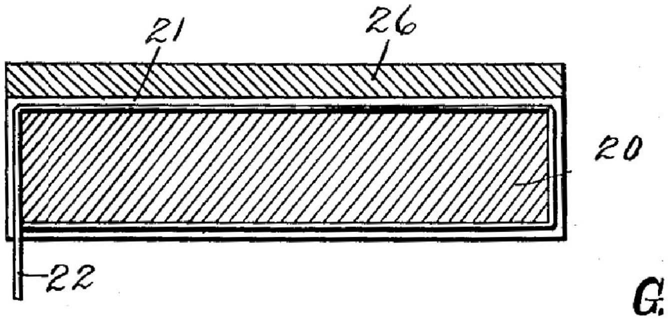

Inventor
G. Fuehler

Witnesses
Arthur K. Moore
L. N. Gillis

By

Attorneys

Inventor: Leonard H. Dyer. Patent № 1339176. "Internal combustion engine" – Granted 1920, Filed 1915!

DESCRIPTION (abridged)

- The object I have in view is First: ***to improve the efficiency of such engine*** by recovering heat generated by the expansion of the gases and converting such heat into work.
- Second: to improve the scavenging[74] of the engine.
- Third: to simplify the cooling.

In the position E, which represents the fifth stroke of the cycle, water is admitted through the inlet 22. This water is admitted in sufficient quantity to absorb the heat caused by the combustion of the gases during the third stroke. The water absorbs the heat and is converted into steam. During this stroke (E) the piston descends, propelled by the expansion of the steam.

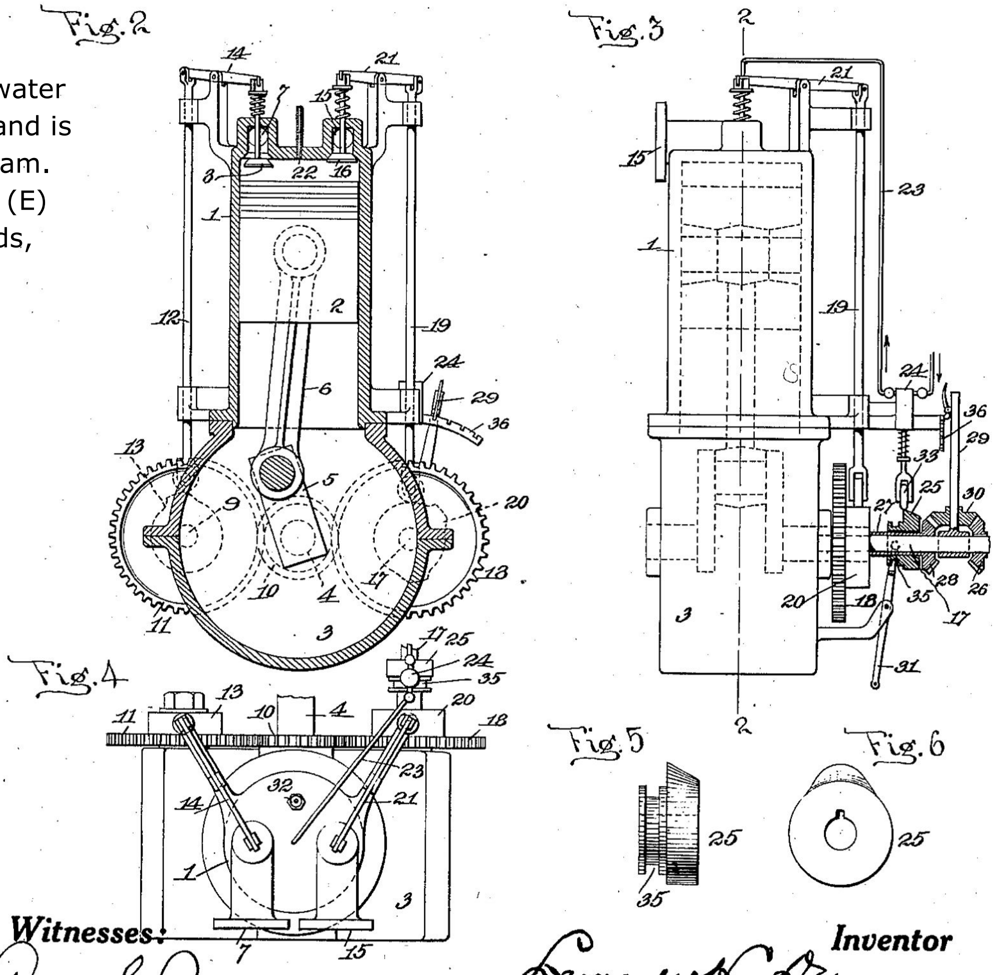

Witnesses:
Anna E. Bristol.
Chas. Schneider

Inventor
Leonard H. Dyer
By Dyer & Taylor
Attorneys.

---

[74] In automotive usage, scavenging is the process of pushing exhausted gas-charge out of the cylinder and drawing in a fresh draught of air or fuel/air mixture for the next cycle. This process is essential in having a smooth-running internal combustion engine.

How old is "hydrogen-oxygen as fuel"?

UK Patent GB364180 from 1931 (approved 1932) – granted to Rudolf Erren from Berlin, Germany. "Improvements in and relating to internal combustion engines using a mixture of hydrogen and oxygen as fuel."

US Patent 2,183 from 1936 (approved 1939) – also granted to Rudolf Erren. "Internal combustion engine using hydrogen as fuel."

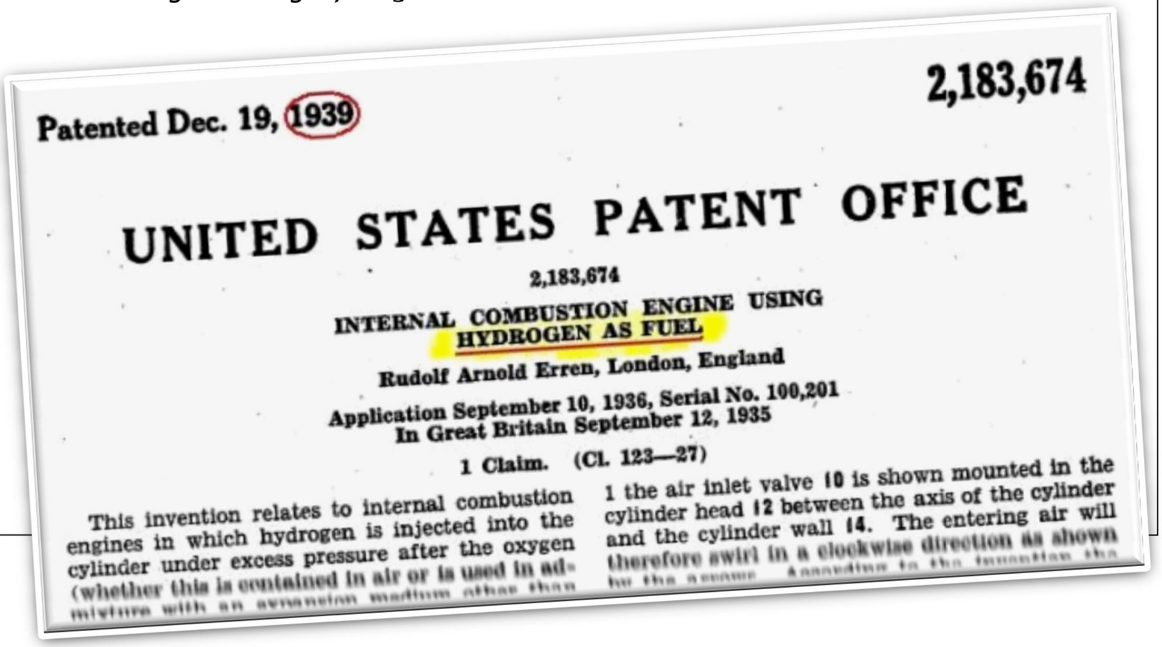

Patented Dec. 19, 1939 2,183,674

UNITED STATES PATENT OFFICE

2,183,674

INTERNAL COMBUSTION ENGINE USING HYDROGEN AS FUEL

Rudolf Arnold Erren, London, England

Application September 10, 1936, Serial No. 100,201
In Great Britain September 12, 1935

1 Claim. (Cl. 123—27)

This invention relates to internal combustion engines in which hydrogen is injected into the cylinder under excess pressure after the oxygen (whether this is contained in air or is used in ad-

1 the air inlet valve 10 is shown mounted in the cylinder head 12 between the axis of the cylinder and the cylinder wall 14. The entering air will therefore swirl in a clockwise direction as shown

More findings on "it was nothing new back then"

US Patent 4,344,831 from 1980 (granted 1982 to Charles T. Weber) — "Apparatus for the Generation of Gaseous Fuel." In it the inventor says: *"The present invention relates to the generation of gaseous fuel for internal combustion engines, particularly for such engines which use petroleum products to form explosive mixtures when vaporized in air.* **It has long been known** *that internal combustion engines can be fueled by a mixture of hydrogen and oxygen as well as by the standard vaporized petroleum products."*

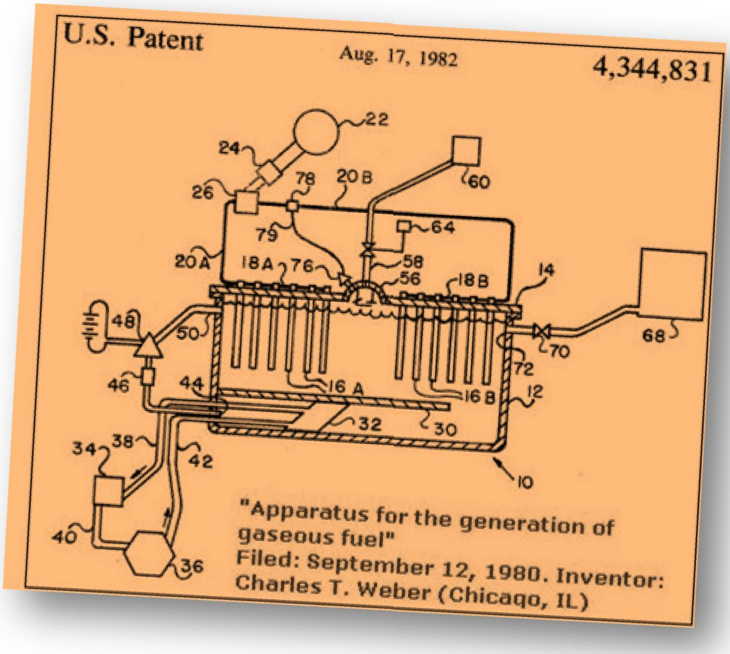

"Apparatus for the generation of gaseous fuel"
Filed: September 12, 1980. Inventor: Charles T. Weber (Chicago, IL)

"It is preferable that both hydrogen and oxygen be provided in gaseous form to an internal combustion engine in ready-to-burn form. The principal object of the present invention is to provide a method for *generating a hydrogen-oxygen fuel suitable for powering internal combustion engines.* Another object of this invention is to provide apparatus for powering an internal combustion engine which will reduce polluting emissions into the atmosphere. Another object of this invention is to provide a means for *powering a vehicle utilizing water as one of the basic sources of energy."*

"...apparatus for generating a gaseous fuel useful as a heat source as well as in an internal combustion engine which is non-polluting, the materials for which are readily available in all parts of the world."

2001 – this continues with US Patent № 6,257,175 "OXYGEN AND HYDROGEN GENERATOR APPARATUS FOR INTERNAL COMBUSTION ENGINES" describing in detail the use of hydrogen and oxygen as fuel, and the benefits of reduced pollution, and states that "It has long been known."

1983 - US Patent № 4,369,737 "HYDROGEN-OXYGEN GENERATOR." In this Patent the inventor, **Cledith A. Sanders**, says: "A cell for generating hydrogen and oxygen comprised of a plastic housing and a plurality of regularly spaced metallic electrode rods... This cell finds particular use as a fuel generator for internal combustion engines.

He also mentions US Patents 3,311,097; 3,980,053; 4,023,545, and says that *"these patents teach the use of an electrolytic cell for making combustible mixture of hydrogen and oxygen from water, and using this mixture of gases as fuel for the engine."*

The Patent says: *"Hydrogen and oxygen gases are generated for use in an internal combustion engine in a vehicle using the electrical system of the vehicle to provide current for the electrolysis process to generate the hydrogen and oxygen gases. The electrolysis process to eliminate oxygen and hydrogen gases occurs only while the engine is being operated and terminates when the engine stops...*

"It has long been known that the pollution caused by internal combustion engines can be decreased by the addition of oxygen. As a matter of fact, in recent years the oxygenating of fuel has been mandated in various states or areas as a means for decreasing pollution.

"At the same time, it has long been known that the burning of hydrogen provides a source of clean energy, since the combustion of hydrogen results in the formation of water as a by-product. Hence, the use of an electrolysis unit to generate hydrogen and oxygen gases from water provides two important features, one of which is providing additional energy from the internal combustion engine and the other of which is decreasing pollution by the addition of oxygen in the combustion process."

NASA, 1974

Document Title: “On-Board Hydrogen Generator for a Partial Hydrogen Injection Internal Combustion Engine”

- Authors: John Houseman; Donald J. Cerini
- ***Jet Propulsion Laboratory,*** California Institute of Technology
- Published: 1974 by the Society of Automotive Engineers; SAE Preprint 740600
- Download: http://www.sae.org/technical/papers/740600

ABSTRACT: “This paper deals with selected aspects of a modified fuel system, so-called partial hydrogen injection, that substantially lowers NO_x emissions and also increases engine efficiency considerably.

“It has been demonstrated that mixtures of hydrogen and gasoline will burn at an air to (mixed) fuel ratio of 30, resulting in very low NO_x levels and increased efficiency.

“The basic explanation for this phenomenon lies in the extremely low lean flammability limit of hydrogen, which occurs at an A/F of approximately 340 (on a mass basis). The lean limit of gasoline/hydrogen mixtures thus extends over the range of A/Fs from 24 to 340, the actual ration depending on the relative amounts of hydrogen and gasoline. As indicated earlier, the low flame temperature associated with ultra lean combustion accounts for the low NO_x formation. The lower flame temperature also reduces the energy losses to the radiator cooling fluid and to the surroundings, thus increasing engine efficiency. The excess air in the combustion gas dilutes the carbon dioxide and water content of the conventional exhaust, thus decreasing the triatomic molecular content. This reduces the specific heat ratio c_p/c_v of the combustion gas, which also increases engine efficiency.

“There are some obvious advantages in a system that utilizes mixtures of hydrogen and gasoline rather than all hydrogen. The main ones are better acceleration response and a smaller hydrogen generator.”

NASA, 1976

Document Title: “Selection of Emission Reduction Concepts for Intermittent Combustion Aircraft Engines”

Teledyne Continental Motors, Inc.

- Dated: November 1976
- Authors: B.J. Rezy, J.E. Meyers, J.R. Tucker, K.J. Stuckas
- Project Manager at NASA: M. Skorobatckyi
- Prepared for: NASA Lewis Research Center, Cleveland, Ohio 44135
- Prepared for NASA by: ***Teledyne Continental Motors, Aircraft Products Division,*** Mobile, Alabama, USA
- Publication Number: NASA CR-135074
- Download: https://ntrs.nasa.gov/archive/nasa/casi.ntrs.nasa.gov/19770008095.pdf

Excerpt (page 30 of the original report, page 39 in the PDF download):

> ***5.10 HYDROGEN ENRICHMENT***
>
> ***“Hydrogen Enrichment is the process of mixing hydrogen with normal gasoline (or other hydrocarbon fuel) to form a fuel mixture with the lean flammability limit extended to ultralean fuel-air ratios. Ultralean operation results in higher thermal efficiencies, hence lower fuel consumption, and low exhaust emissions that accompany lean operation in the fuel-air range possible. --- The proposed system reportedly requires relatively small modifications to aircraft engines.”***

The main advantages they count are ultralean operation – leading to ***improved fuel economy*** – and ***reduced emissions*** of the aircraft.

This NASA/Teledyne document is based in part on NASA’s recommendations expressed in the above given 1974 report prepared by Houseman and Cerini of the Jet Propulsion Laboratory. Teledyne engineers took the known and tested principle of improving combustion with supplemental hydrogen from the road up into the sky, showing an understanding that its usefulness can be applied wherever you find the KNOWN AND ACKNOWLEDGED CONDITION OF INCOMPLETE COMBUSTION of any fossil fuel.

U.S. Government, 1995

Document Title: “System for generating hydrogen and oxygen”

- ☐ Author: Yoshiro Nakamats
- ☐ Document #: US 5399251A
- ☐ Published by: USPTO, U.S. Government, Virginia (USA)
- ☐ Date Published: March 21, 1995
- ☐ Download: http://pdfpiw.uspto.gov/.piw?Docid=05399251

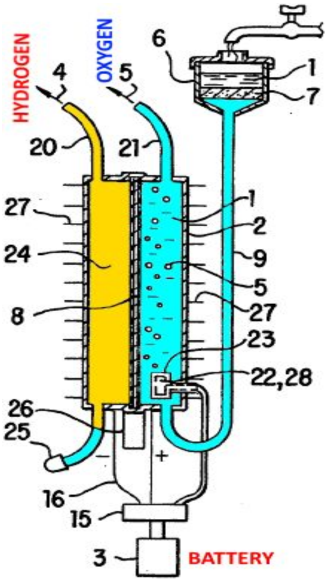

Overview

Yoshiro Nakamatsu (born 1928) also known as Dr. NakaMats (ドクター中松, Dokutā Nakamatsu) is a Japanese inventor who has become a celebrity for his 4,000 inventions and even dubbed “The Greatest Inventor of All Time” by his many fans, who in 2009 made a movie in his honor, titled ‘The Invention of Dr. Nakamats’ (www.imdb.com/title/tt1708535/). The importance of this particular document is the richness and precision of its test results. ***The detailed graphs included by the inventor provide in-depth perspectives into the effects of Waterfuel done right.***

Abstract[75]

Hydrogen mixing accelerates the effect of increasing combustion speed, particularly by turbulence of thin mixed gas. Increase of combustion speed in turbulent flow by mixing hydrogen on the side of excessive density of hydrogen having approximately 1.3 of equivalent ratio φ shows an almost straight relationship as well as an increase in regular combustion speed, and hydrogen combustion speed on the side of thin density of hydrogen increases greatly by mixing approximately 2% hydrogen. The reason why the effect of turbulence on combustion speed increases greatly on the side of thin density by adding small amount of hydrogen is that the molecule dispersion coefficient of hydrogen is so extremely large that hydrogen disperses on the surface of irregular disordered combustion and selects oxygen to burn.

On the basis of observations when using a burning vessel, it has been confirmed that the irregular surface of flame becomes very fine by mixing hydrogen. Consequently, when using this mixed gas, effective transmission of flame is accelerated more and more in case of thin mixed gas and of lower mixing ratio of hydrogen. --- The effect of the invention on

---

[75] Greatly abridged – download the complete document from the U.S. Gov't website given above.

the density of air pollution materials contained in engine exhaust results in making possible the driving of cars at fully low equivalent rate of NO density compared with gasoline, only by mixing hydrogen into thin mixed gas.

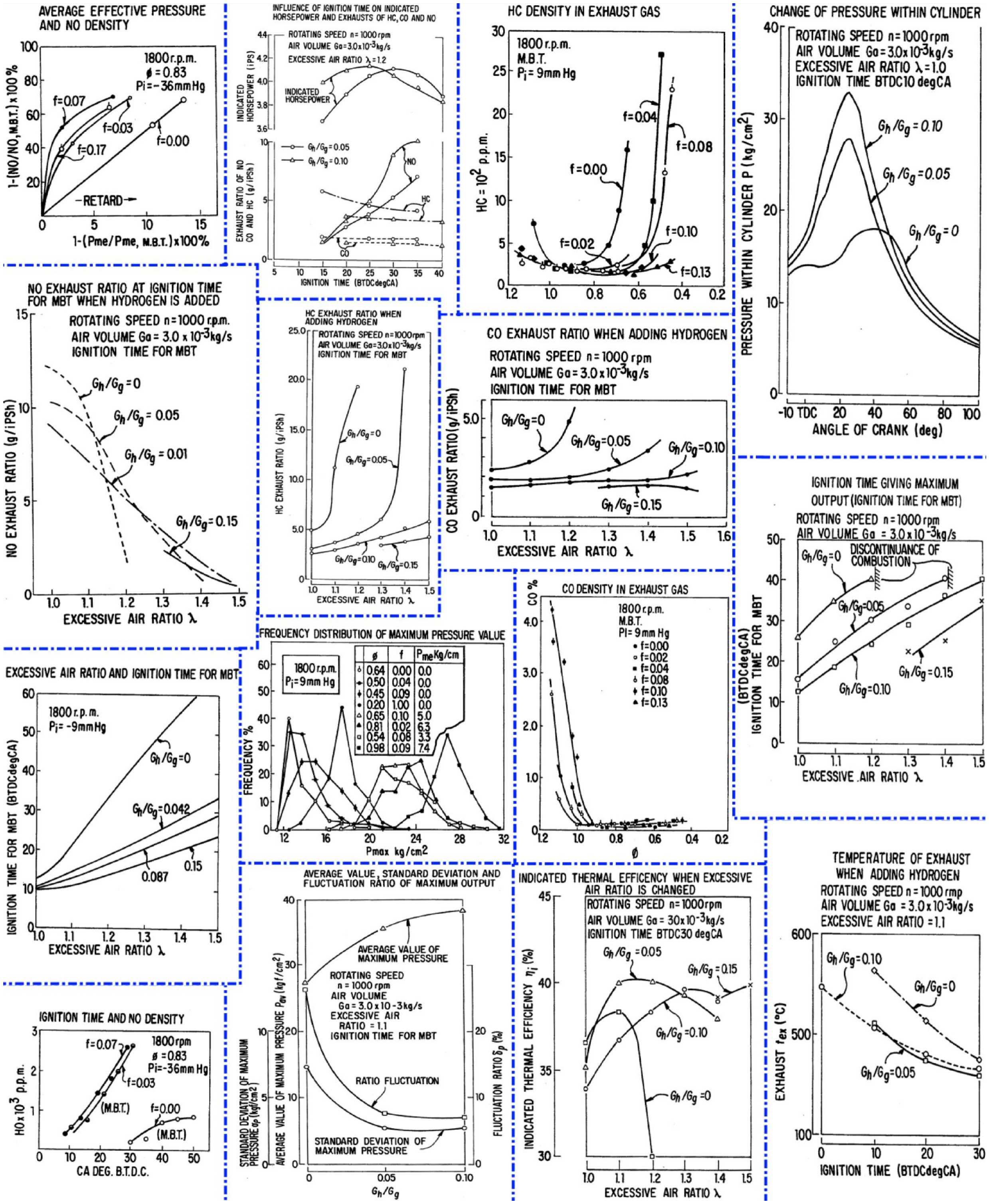

Notes: (a) This is a partial view for general impression only; refer to Patent for full data.
(b) This information has also been submitted to the Japanese Government in 1990. *(~Ozzie)*

Kocaeli University, 2000

Document Title: "Fuel Economy Improvement by On-Board Electrolytic Hydrogen Production"

☐ Authors:
Zafer Dülger, Department of Mechanical Engineering, Kocaeli University, 41100, Kocaeli, Turkey
K.R. Özçelık, Hydrogen Economy Utilisation Co., Altintepsi Mah. Kazim Karabekir Cad. No: 67, Istanbul, Turkey

☐ Published: International Journal of Hydrogen Energy 25 (2000) pages 895-897

ABSTRACT:** "This study presents a hydrogas system,* *basically a hydrogen generator by the electrolysis of water*. ***The system can be used for both spark ignited and compression ignition internal combustion engines. Within the compact structure of the system, tap water is electrolysed by so called "closed cell electrode technology".

"Thus, produced hydrogen gas along with oxygen are fed to the intake manifold. *Due to the simultaneous production and consumption of hydrogen, no storage is necessary, which results in safe operation*. ***The system was installed in four cars in order to demonstrate its effect on fuel consumption.***

"Emission ... reduce up to a margin of 40-50% ***depending on the type of the engine. Also, no performance penalty is observed. Acceleration, torque and maximum power remains unchanged. Therefore, without altering any performance criteria, the system*** *yields 35-40% fuel savings and reduces exhaust emissions*."

Fuel economy results found UNDER CITY TRAFFIC CONDITIONS:

- **1993 Volvo 940 .... reduction of 43% in fuel consumption**
- **1996 Mercedes 280 ...... reduction of 36% in fuel consumption**
- **1992 Fiat Kartal* .... reduction of 26% in fuel consumption**
- **1992 Fiat Dogan* .... reduction of 33% in fuel consumption**

** Kartal and Dadan are Turkish versions of the popular Fiat 131.*

Yonsei University, 2005

Title: "Vitrification[76] of MSWI[77] fly ash using Brown's gas and fate of heavy metals"

- Scientists: Sanjeev Maken, Soo Hyun Jang, Jin-Won Park, Ho-Cheol Song, Seungmoon Lee, Eu-Hyun Chan
- Research Institutes: Department of Chemical Engineering, Yonsei Centre for Clean Technology, Yonsei University, 134 Shinchon-dong, Sodaemoon-ku, Seoul, Korea;
  Research Centre, Energy & Environment Corporation, Hwa Sung City, Korea
- Published: *Journal of Scientific & Industrial Research,* Vol.64, Mar. 2005, pp.198-204
- Download: http://nopr.niscair.res.in/bitstream/123456789/5028/1/JSIR%2064%283%29%20198-204.pdf


(a) Fly ash (b) Bottom ash

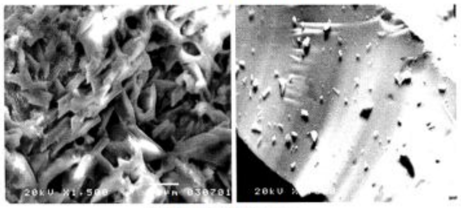
(c) FA slag (d) BA slag

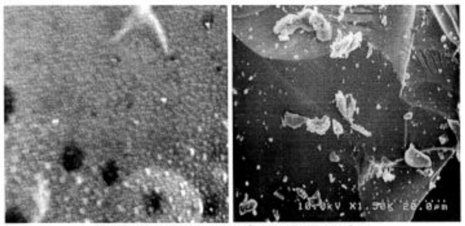
(e)FA:BA (7:3) slag (f) FA:G (7:3) slag

ABSTRACT: Municipal solid waste incinerator (MSWI) fly and bottom ash were vitrified at about 1450°C, for the first time, using Brown's Gas. Vitrification of pelletized fly ash (fly ash + water glass) results in decrease in leaching of toxic heavy metals (except Pb) to much below the Korean regulatory limit value, though melted fly ash was a poor vitrified product having dark grey appearance. Addition of glass cullet or bottom ash to fly ash increased silica content and decreased the basicity, which lead to good vitrified product having amorphous dark brown glassy structure.

Leaching of all potentially hazardous heavy metals present in fly ash also decreased with decrease of basicity. Heavy metals (Zn, Pb, Cr, As, Cu, Mn, Cd) were efficient to substitute parent Al and Ca ions in the silicate matrix. SEM and XRD studies confirmed that fly and bottom ash contained some crystalline structure which transformed into amorphous glassy structure on vitrification. *As the vitrified ash products of fly ash and its mixtures with glass cullet or bottom ash were found to be non-hazardous in nature and glassy in appearance, they could be considered as construction and road building material in future.*

---

[76] Vitrification (from Latin vitreum, "glass" via French vitrifier): Transformation of a substance into a glass, i.e., a non-crystalline amorphous solid. In the production of ceramics, vitrification is responsible for its impermeability to water.

[77] MSWI: Municipal Solid Waste Incinerator

Environment Canada, 2005

Document Title: "Hydrogen Fuel Injection System – Technology Fact Sheet for Canadian Hydrogen Energy Company Ltd"

- Author: Environment Canada[78], ETV Canada www.etvcanada.ca
- Published: 2005
- Download: http://web.archive.org/web/20070710051412/http://www.etvcanada.com/data/Canadian_Hydrogen_Energy_Company.pdf

This document provides MEASURED evidence of fuel efficiency and emission reduction on a heavy duty 1992 Detroit Diesel engine and a heavy duty dynamometer system. Also interesting is their presentation of the technology:

> ***ABSTRACT:*** ***"While the test was performed on a Diesel truck engine, the HFI technology is adaptable to a broad range of applications, including*** *light trucks, buses, SUV's, stationary generators, trains, boats, off-road forestry and mining equipment, motor homes and emergency services vehicles*.
>
> ***"Through electrolysis, the Hydrogen Fuel Injection (HFI) kit generates hydrogen and oxygen, which are injected directly into the intake manifold. Published data show that*** *hydrogen burns nearly one order of magnitude faster than petroleum fuels, thus approaching ideal thermodynamic cycle; and hydrogen has a shorter flame quench distance, allowing flames to travel closer to the cold zones, thus improving combustion. These hydrogen properties improve engine performance and emissions*.
>
> ***"For direct injection Diesel engines, the Hydrogen Fuel Injection (HFI) kit injects the gases during intake so that it thoroughly mixes with intake air prior to Diesel injection. --- the power for the electrolysis is supplied*** *from the vehicle's engine battery* ***and hydrogen is only*** *produced, on demand,* ***when the vehicle engine is operating."***

---

[78] It's not the Canadian equivalent of the EPA but an organization that provides independent evaluations of new environmental technologies.

Dept. of Transportation, 2007

Document Title: "Guidelines For Use Of Hydrogen Fuel *in Commercial Vehicles* — Final Report"

☐ Authors:
John M. Simon, CSP[79], Booz Allen Hamilton Inc. (Los Angeles, California, USA)
Stephen Brady, Booz Allen Hamilton Inc.
Dana Lowell, M. J. Bradley & Associates (Washington, DC, USA)
Michael Quant, Booz Allen Hamilton Inc.

☐ Extensive Peer Review:
Mr. Paul Scott, ISE Corporation (San Diego, California, USA)
Mr. Chris Morgan and Mr. Michael, Chafee, California Highway Patrol
Mr. Craig Michels, Alameda-Contra Costa Transit District (California, USA)

☐ Sponsoring Agency:
Office of Analysis, Research and Technology
Federal Motor Carrier Safety Administration
U.S. Department of Transportation (Washington, DC, USA)

☐ Published: November 2007, Contract/Grant № GS-23F-0025K, 34 pages

ABSTRACT

*Onboard electrolyzers **are** used with hydrogen injection systems for Diesel engines. In this case, **only a small amount of hydrogen and oxygen are produced to supplement, not replace, the Diesel fuel used in the engine.** The electricity to operate the electrolyzer is typically supplied by the engine's alternator or 12/24-VDC electrical system.*

---

[79] Certified Safety Professional

EXCERPTS

> *Today, virtually all commercial trucks are powered by diesel fuel, while private cars are fueled by gasoline. Supported by our National Energy Policy, a new generation of technologies is currently being developed that allow the use of hydrogen as a fuel to power cars and trucks. In the future, hydrogen may be used in one of three ways to power vehicles:*
>
> - *To produce electricity in a fuel cell,*
> - *As a replacement for gasoline or diesel fuel in an internal combustion engine, or*
> - ***As a supplement to gasoline or diesel fuel used in an internal combustion engine.***
>
> *Several fuel cell buses have been demonstrated that "reform," or extract hydrogen from, liquid methanol onboard (Georgetown University, 2003), and there are fuel cell APU systems under development that will derive their hydrogen from onboard reforming of diesel fuel or gasoline (Delphi[80], 2005).*
>
> ***In addition, there are several commercial 'hydrogen injection' systems available for retrofit on diesel engines (CHEC[81], no date). These systems produce small amounts of hydrogen by electrolysis of water carried on the vehicle, which is injected into the diesel engine along with the diesel fuel.***
>
> *A hydrogen injection system for a diesel engine produces small amounts of hydrogen and oxygen on demand by electrolyzing water carried onboard the vehicle. The electricity required is supplied by the engine's alternator or 12/24-volt electrical system (see Section 1.5 for a description of electrolysis).*
>
> *The hydrogen and oxygen are injected into the engine's air intake manifold, where they mix with the intake air.*
>
> *In theory, **the combustion properties of the hydrogen result in more complete combustion of diesel fuel in the engine, reducing tailpipe emissions and improving fuel economy** (CHEC, no date).*
>
> *Limited laboratory testing of a hydrogen injection system installed on an older diesel truck engine operated at a series of constant speeds showed a 4 percent reduction in fuel use and a 7 percent reduction in particulate emissions with the system on (ETVC[82], 2005).*

---

[80] Delphi Corporation (Kent, UK)

[81] Canadian Hydrogen Energy Company (Bowmansville, Canada)

[82] Environment Canada – referring to their 2005 publication given above.

1.5 ELECTROLYSIS OF WATER

The most abundant source of hydrogen on earth is water—every molecule of water contains one oxygen atom and two hydrogen atoms. **It is relatively simple to separate the hydrogen in water from the oxygen using electricity to run an electrolyzer**. An electrolyzer is a galvanic cell composed of an anode and a cathode submerged in a water-based electrolyte. In many ways, the operation of an electrolyzer is the opposite of operating a hydrogen fuel cell. In a fuel cell, hydrogen and oxygen are supplied to the anode and the cathode, and they combine to form water while creating an electrical current that can be put to use. In an electrolyzer, an electrical current is applied between the anode and the cathode, which causes the water in the electrolyte to break down, releasing oxygen gas at the anode and hydrogen gas at the cathode (see Figure 12).

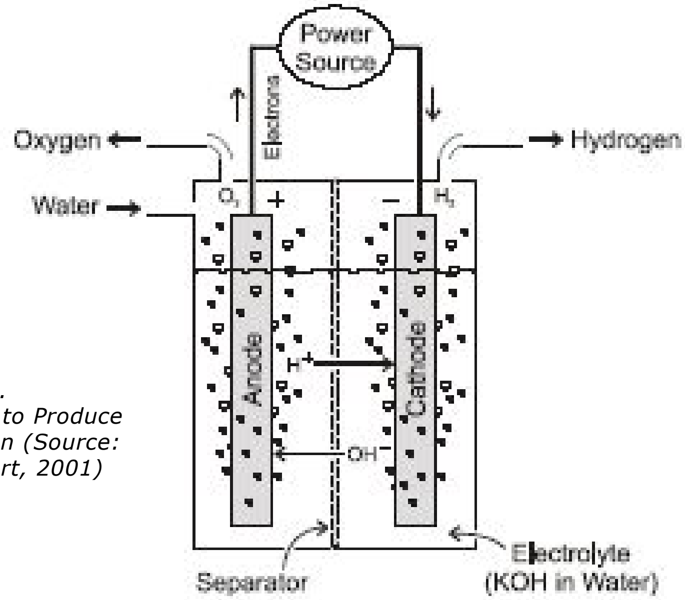

FIGURE 12.
Electrolysis of Water to Produce Hydrogen and Oxygen (Source: College of the Desert, 2001)

A hydrogen injection system for a diesel engine produces and uses significantly less hydrogen than a hydrogen fuel cell or hydrogen ICE, and **does not require that compressed or liquid hydrogen be carried on the vehicle**. The system is designed to produce hydrogen only when required, in response to driver throttle commands. **When the system is shut-off, no hydrogen is present on the vehicle**.

3.5 HYDROGEN INJECTION SYSTEMS

Hydrogen injection systems create small amounts of hydrogen and oxygen through electrolysis, to supplement the diesel fuel in a standard diesel engine.

Çukurova University, 2010

Document Title: "Design and Applications of Hydroxy (HHO) System"

- Author: Ali Can Yilmaz, Department of Mechanical Engineering, Institute of Natural and Applied Sciences, Çukurova University (Adana, Turkey)
- Supervised and examined by: Prof. Dr. Kadir Aydin; Assoc. Prof. Dr. Hüseyin Akilli; Asst. Prof. Dr. Murat Aksoy
- Published: 2010 by Çukurova University
- Download: http://library.cu.edu.tr/tezler/7998.pdf -- this is an excellent 88-page report with great attention to details, and an extensive study into the working principles of engines and their relation to combustion, hydrogen, HHO, Brown's Gas, Electrically Expanded Water and fuel. Also refer to: Ali Can Yilmaz, et al., ***"Effect of Hydroxy (HHO) Gas Addition on Performance and Exhaust Emissions in Compression Ignition Engines",*** published (2010) in *International Journal of Hydrogen Energy,* doi:10.1016/j.ijhydene.2010.07.040

Test Setup

In his Master's Thesis, Ali Can Yilmaz examined the application of Brown's Gas for boosting fuel consumption and emissions reduction of two internal combustion engines: a 4-stroke Diesel and a 2-stroke gasoline engine. No engine modifications, no gas storage tanks.

Results

- ✓ **Fuel consumption** was reduced in both engines by an average of **16.3%**
- ✓ **Torque output** increased by an average of **19.1%**
- ✓ **Emissions:** CO emissions were reduced by an average of 13.5%, HC emissions by an average of 5%

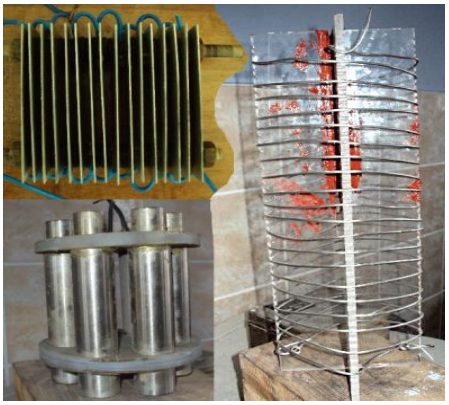

✓ Ali Can Yilmaz tested three HHO Generator configurations, namely: PLATES (top left in this photo), WIRE ELECTRODES (right) and PIPES (bottom left). It is noteworthy that while plates were found superior, if you examine the results closely, there wasn't a dramatic difference. Which means, from the practical point of view, all designs were proven to be useful.

✓ The following table shows the results on the gasoline engine (left column) and the Diesel (right column) – the introduction of Waterfuel wins all the way down *(IMPORTANT NOTE: he sometimes switches between the dotted line and continuous line – check the legend for each picture, and see that* ***the graphs ALWAYS show a win for HHO):***

<table>
<tr><th>GASOLINE</th><th>DIESEL</th></tr>
<tr><td>

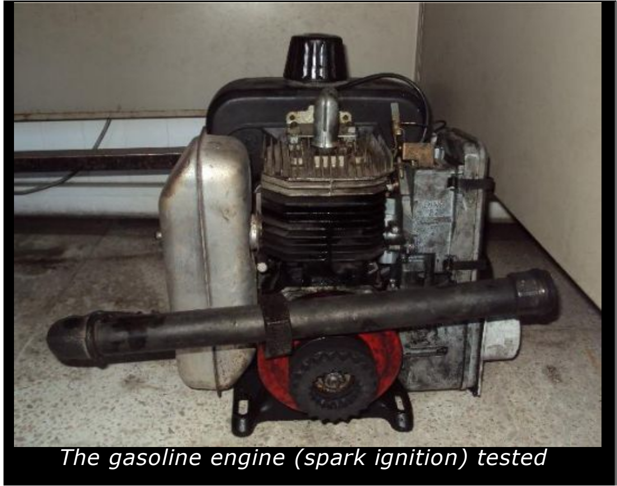

The gasoline engine (spark ignition) tested

</td><td>

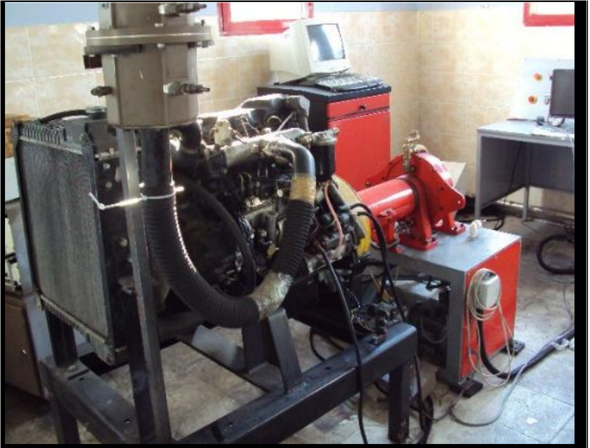

The Diesel engine (compression ignition) tested

</td></tr>
<tr><td>

Gasoline – higher torque:

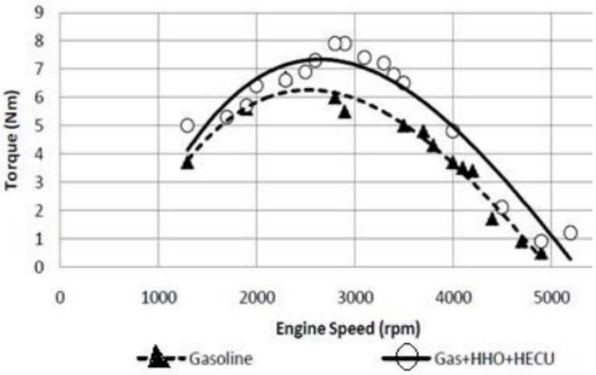

</td><td>

Diesel – higher torque:

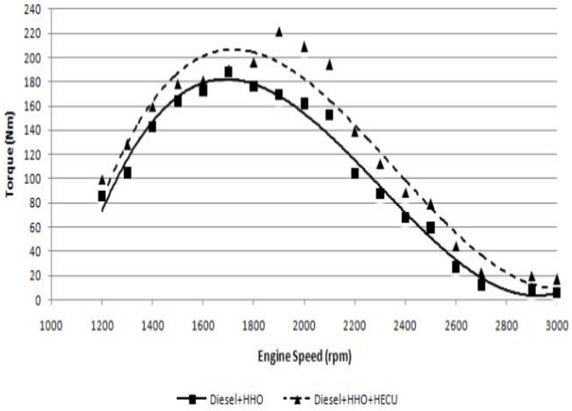

</td></tr>
</table>

Gasoline – better fuel economy:

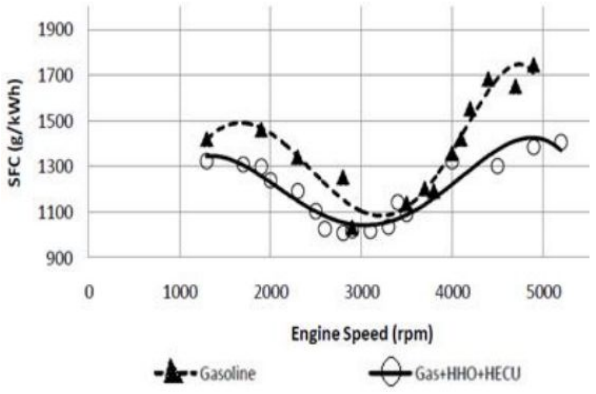

Diesel – better fuel economy:

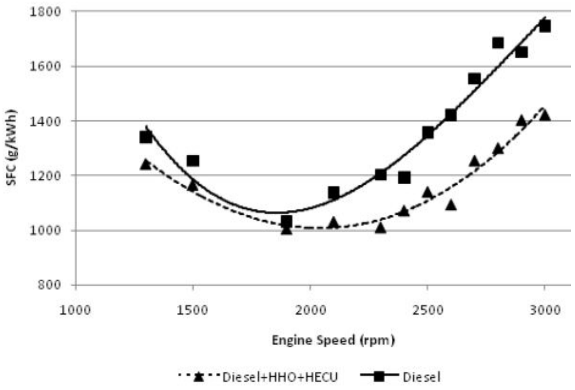

Gasoline – decrease in CO pollutants:

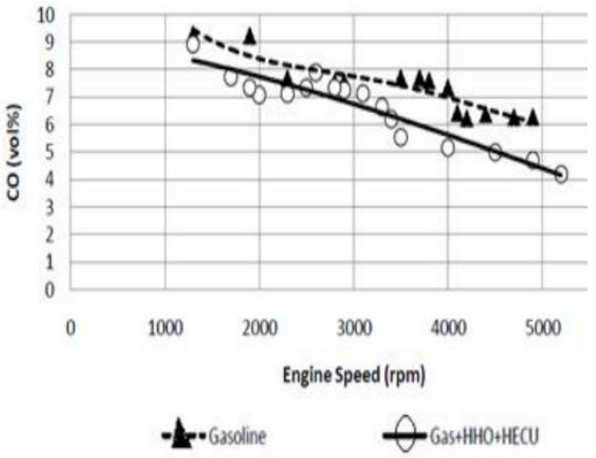

Diesel – decrease in CO pollutants:

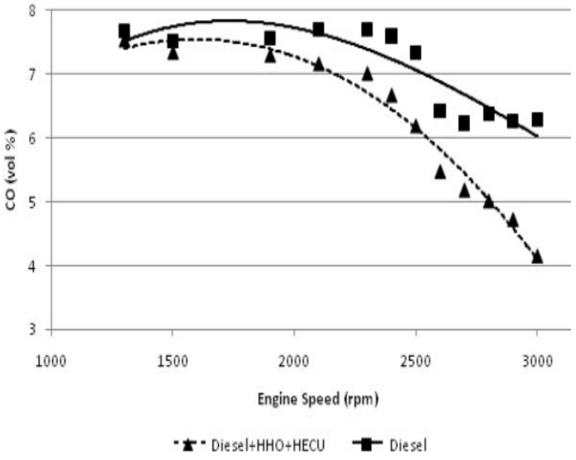

Gasoline – decrease in HC pollutants:

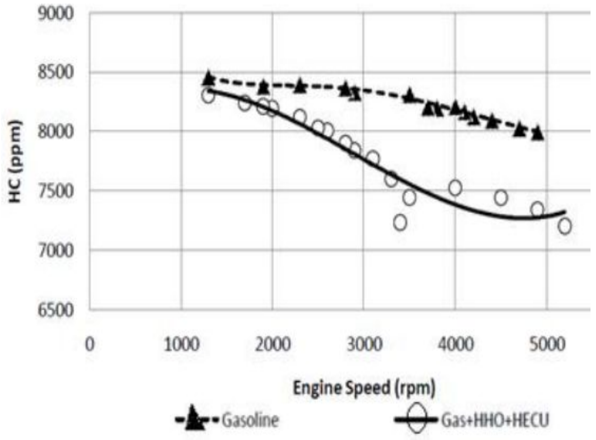

Diesel – decrease in HC pollutants:

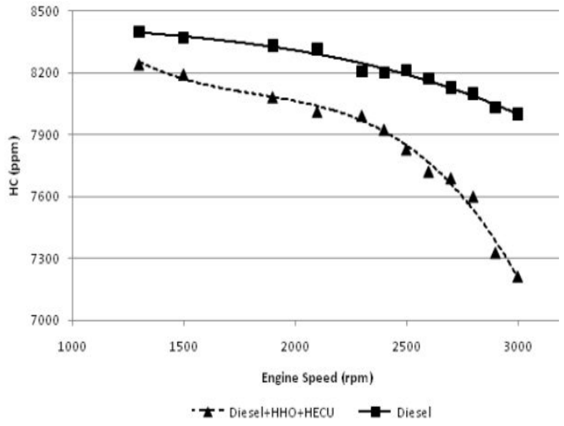

Mutah University, 2011

Document Title: "Effect of HHO gas on combustion emissions in gasoline engines"

- ☐ Scientists: Sa'ed A. Musmar; Ammar A. Al-Rousan
- ☐ Institution: Department of Mechanical Engineering, Faculty of Engineering, Mutah University, Jordan
- ☐ Published: Science Direct, http://dx.doi.org/10.1016/j.fuel.2011.05.013
- ☐ Date: Feb. 2011
- ☐ Download: http://www.sciencedirect.com/science/article/pii/S0016236111002754

Abstract

20-30% less fuel

Reducing the emission pollution associated with oil combustion is gaining an increasing interest worldwide. Recently, Brown's gas (HHO gas) has been introduced as an alternative clean source of energy. A system to generate HHO gas has been built and integrated with Honda G200 (197 cc single cylinder engine). The results show that a mixture of HHO, air, and gasoline causes a reduction in the concentration of emission pollutant constituents and an enhancement in engine efficiency. The emission tests have been done with varying the engine speed. The results show that nitrogen monoxide (NO) and nitrogen oxides (NO_x) have been reduced to about 50% when a mixture of HHO, air, and fuel was used. Moreover, the carbon monoxide concentration has been reduced to about 20%. Also a reduction in fuel consumption has been noticed and it ranges between 20% and 30%.

Engine

- Make: Honda
- Type: 4 stroke, side valve, 1 cylinder
- Bore and Stroke: 67 x 56 mm
- Total Displacement: 197 cc
- Max. Horsepower: 3.7kW (5 HP) @3600rpm
- Max. Torque: 1.06 kgm @2500 rpm
- Compression Ratio: 6.5:1
- Cooling: Forced air
- Ignition: CDI

Test Setup

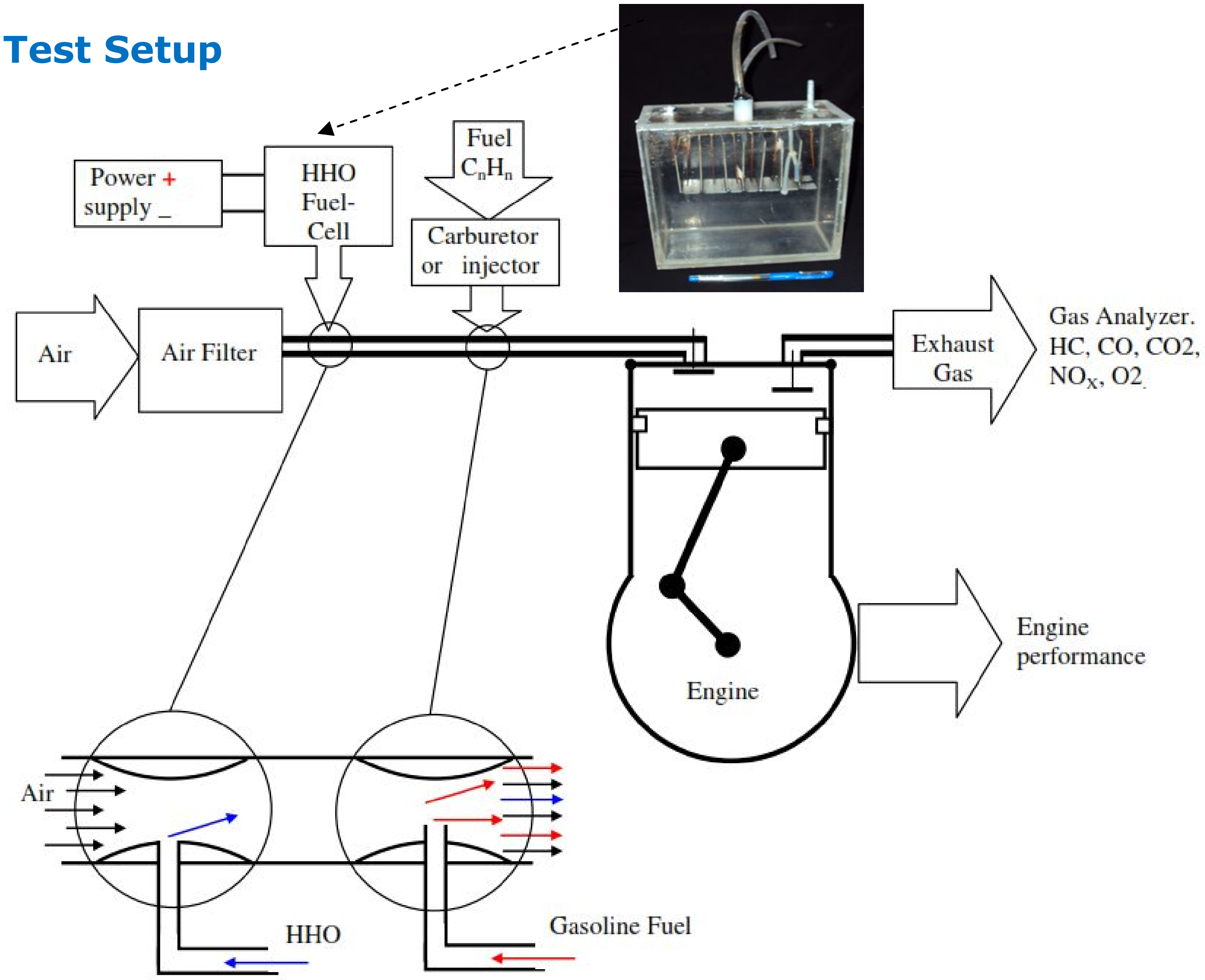

Test Results

1. HHO cell may be integrated easily with existing engine systems.
2. The combustion efficiency has been enhanced when HHO gas has been introduced to the air/fuel mixture, consequently reducing fuel consumption.
3. The concentration of nitrogen oxide has been reduced to almost 50% on average when HHO is introduced to the system.
4. When HHO is introduced to the system, the average concentration of carbon monoxide has been reduced to almost 20% of the case where air/fuel mixture was used (no HHO).
5. The NO_x average concentration has been reduced to about 54% of the case where HHO was not introduced.
6. HC concentration is highly affected by the engine speed and the presence of HHO gas.

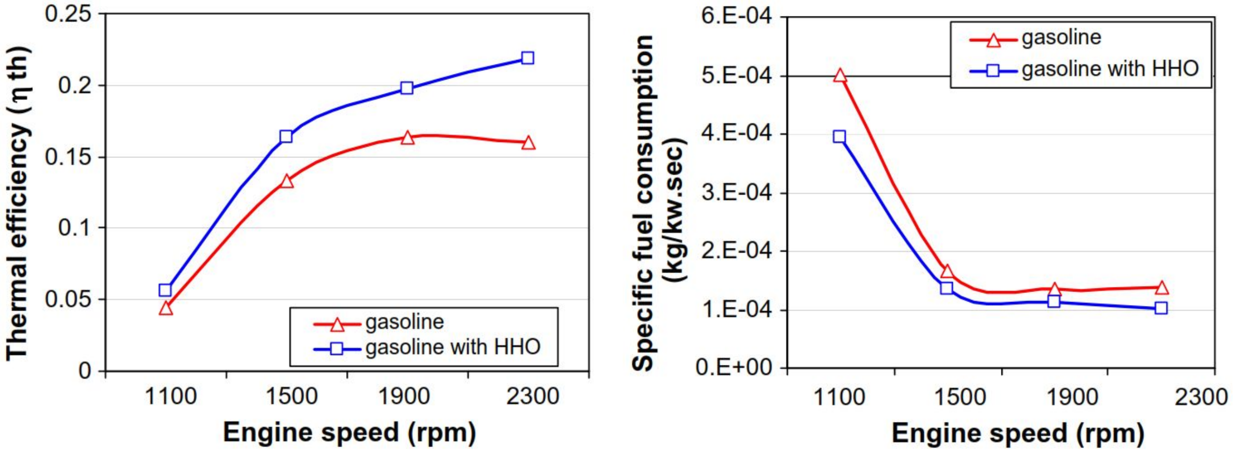

Effect of HHO gas on break efficiency and fuel consumption

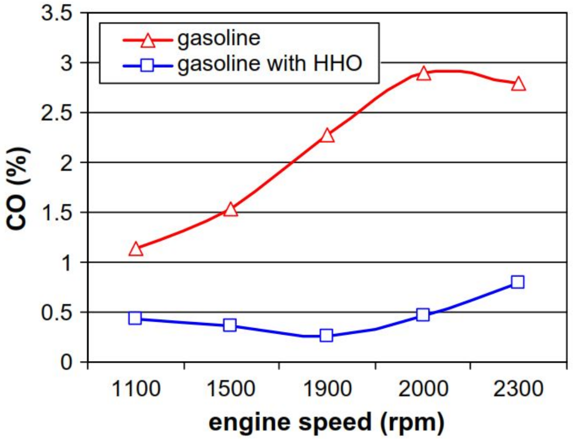

Variation of carbon monoxide concentration with engine speed

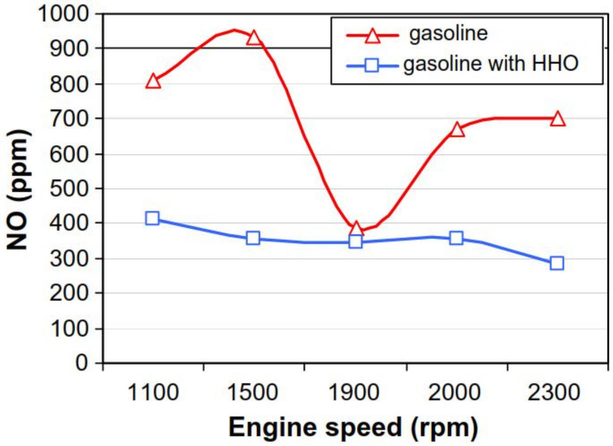

Variation of nitrogen oxide concentration with engine speed

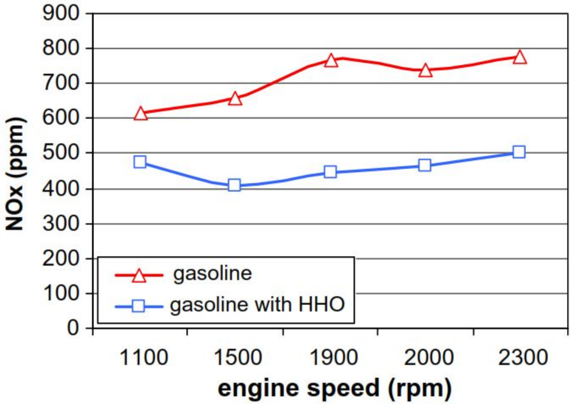

Variation of nitrogen oxides (other than NO) concentration with engine speed

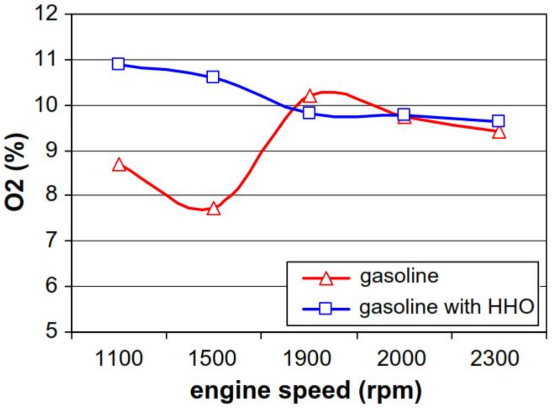

Variation of oxygen concentration in the exhaust with engine speed

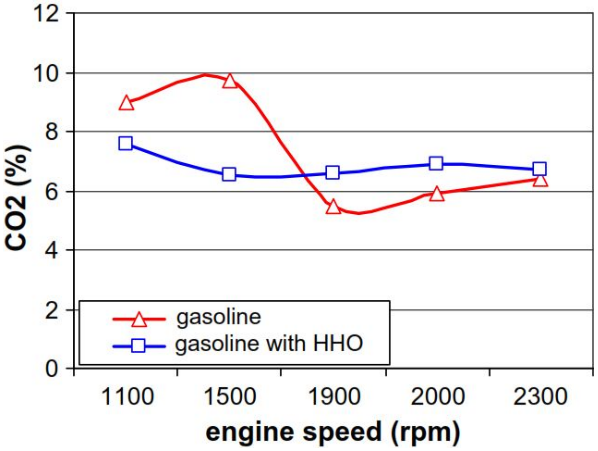

Variation of carbon dioxide concentration in the exhaust with engine speed

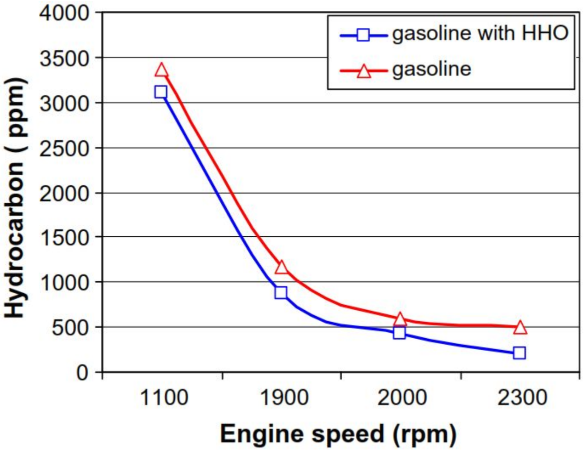

Plot showing the effect of using HHO on hydrocarbon concentration in exhaust gas with variable engine speed (rpm)

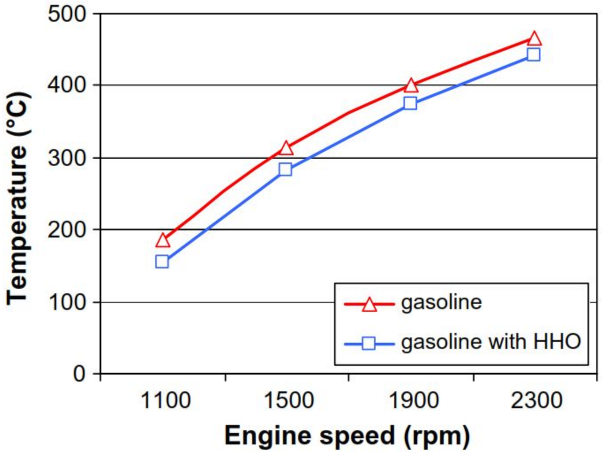

Plot showing the effect of using HHO on exhaust gas temperature with variable engine speed (rpm)

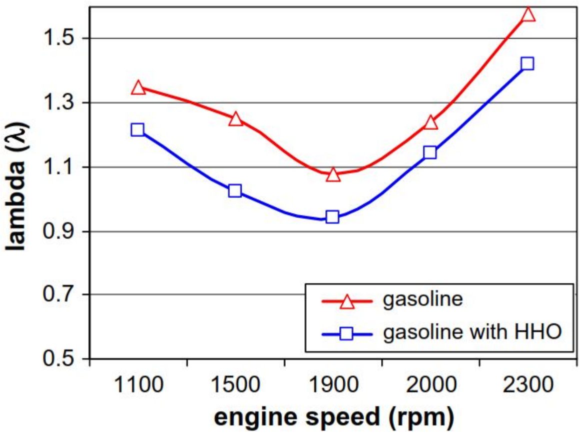

Plot showing the effect of using HHO on lambda with variable engine speed (rpm)

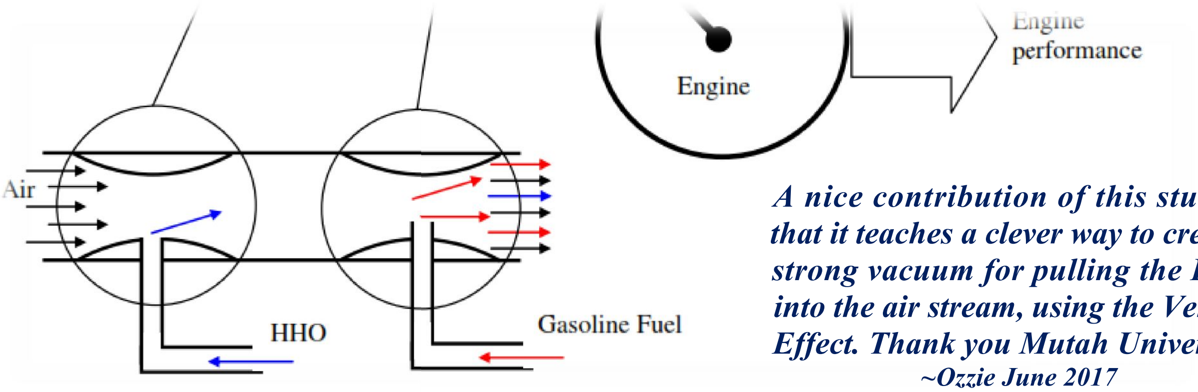

A nice contribution of this study is that it teaches a clever way to create a strong vacuum for pulling the HHO into the air stream, using the Venturi Effect. Thank you Mutah University!

~Ozzie June 2017

Malaysia, and University of Maryland, 2012

Document Title: "Brown Gas Incinerator for Waste Destruction and Environmental Pollution Compliance"

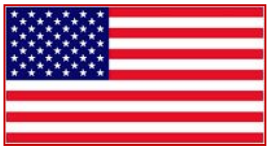

- ❑ Scientists: Kho Boon Kie and Prof. Ashwani K. Gupta
- ❑ Sponsoring institutions:
  - Sekolah Menengah Kebangsaan Lutong, Jalan Pantai Lutong, 98000 Miri, Sarawak, Malaysia
  - University of Maryland, College Park, MD 20742, USA
- ❑ Published: APEC Youth Scientist Journal Vol. 4 / No.1
- ❑ Date: August 2012
- ❑ Download: www.amgs.or.kr/New/common/journal/vol4_no.10.PDF

ABSTRACT

All municipal wastes consists large amounts of water (as much as 60% by mass) which **hinders the performance of waste incinerators.** Excess water can easily be separated out from the municipal solid wastes using centrifuges. The waste water can be reformed to Brown gas (di-atomic and mon-atomic hydrogen and oxygen) using an electrolyzers. At the instant that the water splits, the hydrogen and oxygen are in their mon-atomic state (H and O). Brown gas in the form of hydrogen and oxygen production form waste water is useful from waste waters and all kinds of solid wastes. Dehydrated waste can be easily combusted in an incinerator.

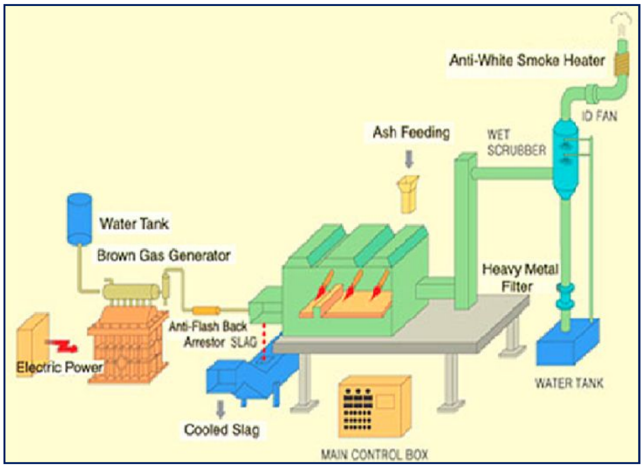

--- Low energy density and high moisture content in the waste *require the use of auxiliary fuel to maintain high temperatures* in the incinerator. --- In this paper, different technologies are described that form key elements of overall waste management system, including the brown gas production from the water collected from solid wastes that can be used in the incinerator to further increase the incinerator temperature.

Notable scientific fact from this study: ***"An air-hydrogen torch flame reaches 2045°C, while an oxyhydrogen flame reaches 2660°C."***
Source: article "Hydrogen" composed 2004, last revised 2008 by Dr. James B. Calvert, Associate Professor Emeritus of Engineering, University of Denver; Registered Professional Engineer, State of Colorado. http://mysite.du.edu/~jcalvert/phys/hydrogen.htm

C.V. Raman College, 2013

Document Title: "Effects of Brown Gas Performance and Emission in a SI[83] Engine"

- Scientists: Prof. D.V.N. Lakshmi; T.R. Mishra; R. Das; Prof. S.S. Mohapatra
- Sponsoring institutions: Department of Mechanical Engineering, C.V. Raman College of Engineering (http://mech.cvrce.edu.in) and Siksha 'O' Anusandhan University (SOA University), Bhubaneswar
- Published: International Journal of Scientific & Engineering Research, Vol.4 (ISSN 22295518) pp 170-173
- Date: December 2013
- Download: www.ijser.org/researchpaper%5CEffects-of-Brown-Gas-Performance-and-Emission.pdf

Abstract

The world is facing declining liquid fuel reserves at a time when energy demand is exploding. As the supply decreases and costs rise, in order to achieve a secure and stable energy supply that does not cause environmental damage, renewable energy sources must be explored and promising technologies should be developed. Considering various gaseous fuels, Brown's gas produced by the electrolysis process of water has high potential for cost effective and emission aspects. It is identified as the one of the best partial alternate gaseous fuel to be enriched with intake air in a spark ignition engine or compression ignition engine.

The present investigation involves the usage of Brown's gas in SI engines. The experiment was carried out in a 100 cc single cylinder air cooled engine at 1500 rpm for various loads. The performance characteristics such as Brake thermal efficiency, specific fuel consumption and emission characteristics like Carbon monoxide (CO), and Oxides of Nitrogen (NO_x) are studied. The results are compared with petrol engine and found that the Brown's gas enriched operation gives better results compared to conventional engine operation.

---

[83] SI: Spark Ignition

Engine

- Make: Hero Honda Company Ltd.
- Bore: 52.4 mm
- Stroke: 57.8 mm
- Displacement: 97.2 cc
- Compression ratio: 9.1:1
- Power: 7.6 HP (5.5 kW) @8000rpm
- Torque: 6.5 Nm @8000 rpm
- Fuel feed: by carburetor
- Ignition: Electronic type
- Cooling: Air
- Gear box: 4-speed

Test Setup

A standard stainless-steel HHO generator was built from open source plans. It was then connected to the engine test setup shown below, via a safety bubbler into the air intake of the carburetor.

Cylinderical

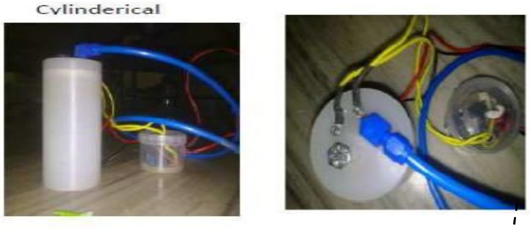

Fig.2 Side and top view of HHO generator

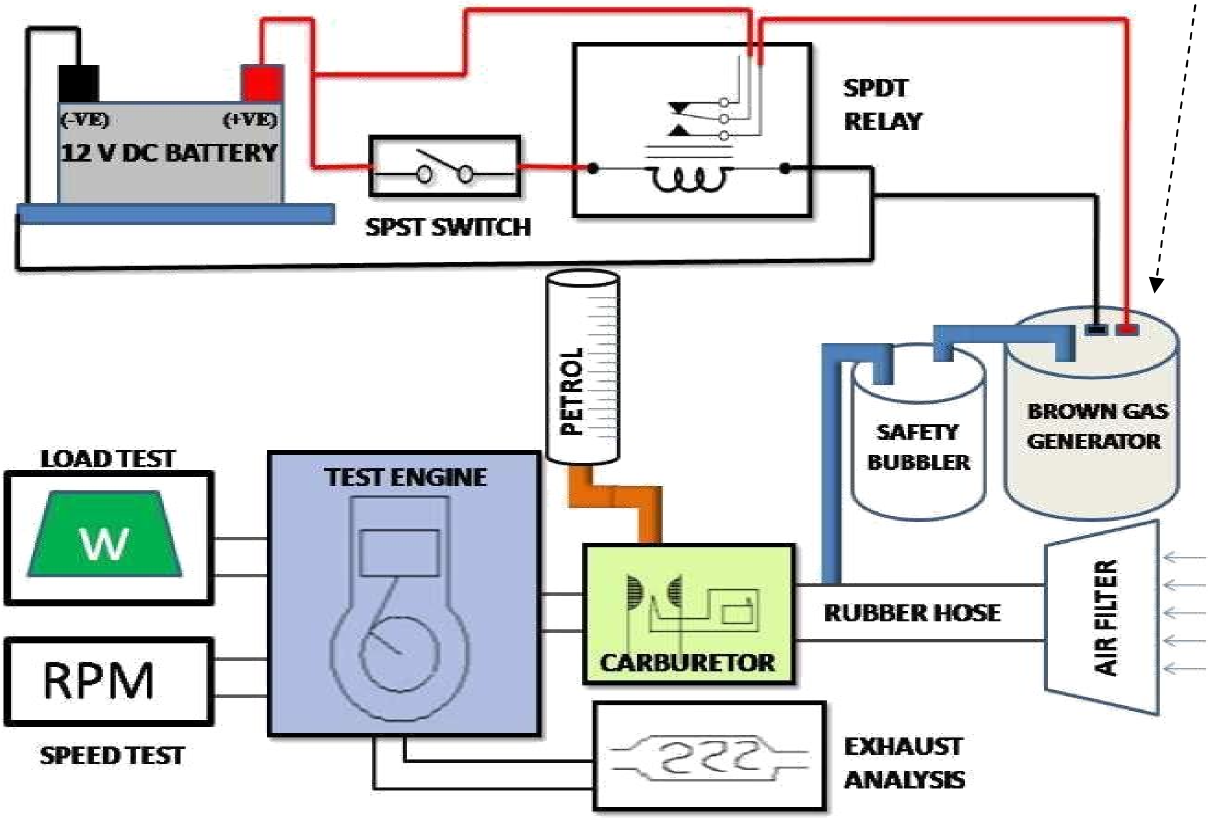

Test Results

- Brake thermal efficiency of Brown's Gas engine enriched operation gives higher than normal conventional S.I. Engine. At full load brake thermal efficiency of a Brown's Gas boosted engine operation gives 30% more than normal conventional engine.
- The concentration of NOx has been reduced to almost 25% when Brown's Gas petrol engine was used.
- Carbon monoxide emissions are reduced by using Brown's Gas.
- This work proves that using brown gas enriched internal combustion engines is advantageous compared to gasoline engines.

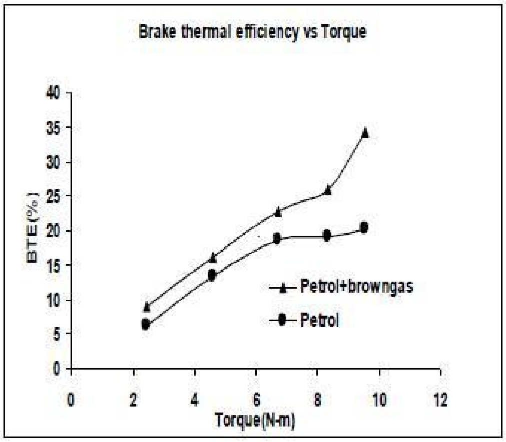

Fig.4.Comparision of brake thermal

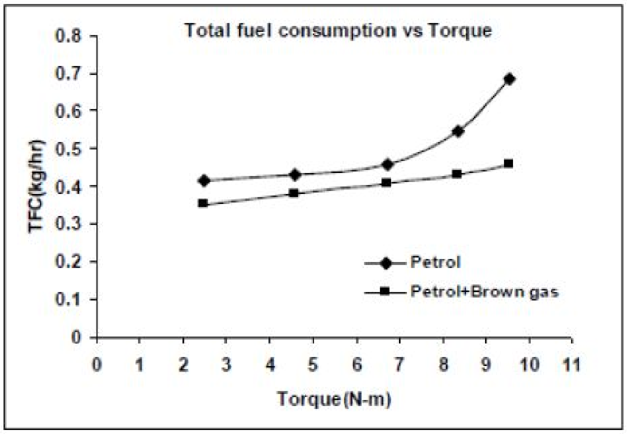

Fig.5.Comparision of Total specific fuel

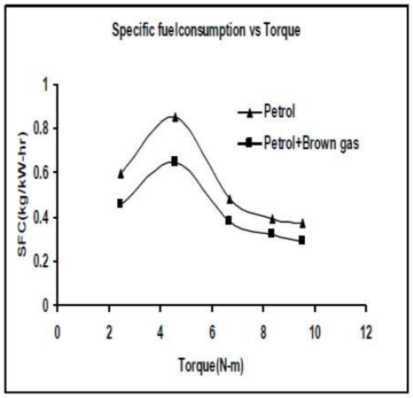

Fig.6.Comparision of Specific fuel

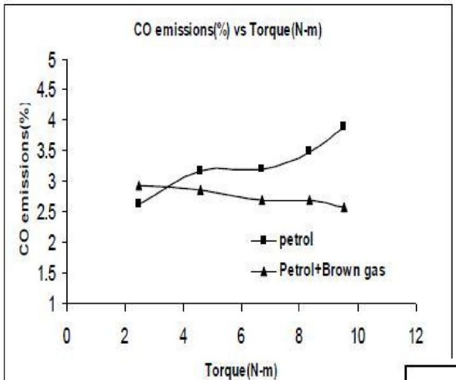

Fig.7.Comparision of CO emissions

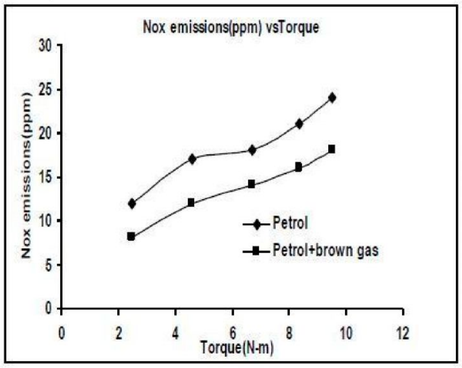

Fig.8.Comparision of NO$_x$ emissions

HydroAtomic Institute, 2013

Title: "Verification Report of HNG[84] – Scrubber Process"

- Authors: Lars Månsson, CEO of MetLab AB www.metlab.se (Enköping, Sweden) and Olof Sten, CEO of Palgo AB www.palgo.se (Arlöv, Sweden)
- Published: 2013, HydroAtomic Institute, Stockholm, Sweden www.HydroInfra.com
- Download: http://www.hydroinfra.com/en/wp-content/uploads/sites/2/2014/07/HIT-HNG-Verification-Report-June-2013.pdf

"According to our professional experience we have never seen results like this before." [Lars Månsson & Olof Sten]

POSITIVE ENERGY BALANCE

"Question: Is the energy needed to produce HNG gas reasonable in relation to its emission and energy performance?"

"Answer: The HNG gas is a reactive gas, not intended to be used as an energy carrier. When the HNG gas is injected in the Diesel fuel (hydro carbon), it quickly frees the hydrogen bond in the fuel. Only a very small amount of the HNG gas is needed to gain a very efficient burning process. This results in a net gain in energy efficiency between 10-30%. This means a positive energy balance between the cost of HNG gas production and the total energy efficiency gain."

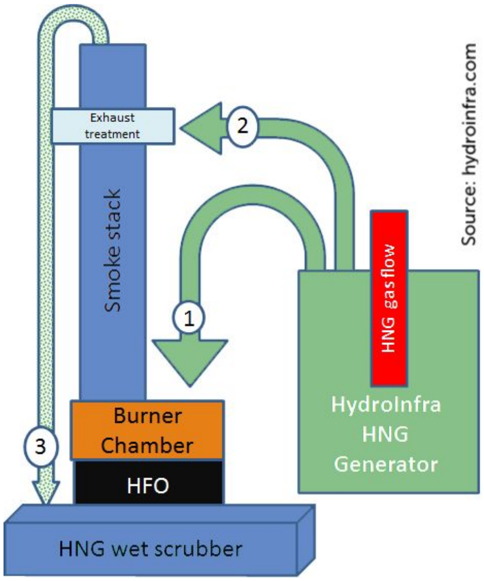

Source: hydroinfra.com

CONCLUSION

"The answer to the questions above gives the reader of this report the possibility to imagine the great consequences for the global climate, when the HNG technology will be implemented. A rapid transformation to a clean energy use for a sustainable future that can start now."

---

[84] Hydro Nano Gas, another name for Brown's Gas.

Anna University, 2013

Title: "Utilization Of Brown Gas As A Supplemental Fuel In The Diesel Engine As Pre-Combustion Exhaust Emission Reduction Method"

- Research Institute: Villupuram Campus, Anna University, Tamil Nadu, India
- Authors:
  - P.T. Sowba - P.G. Student
  - Nattan Ravichandran - Research Scholar
  - Dr. R. Senthil - Dean i/c

- Published:
  - International Journal of Engineering Research & Technology (IJERT)
  - ISSN: 2278-0181
  - Vol. 2, Issue 6, June 26, 2013
- Download: http://www.ijert.org/download/4142/utilization-of-brown-gas-as-a-supplemental-fuel-in-the-diesel-engine-as-pre-combustion-exhaust-emission-reduction-method

TEST RESULTS:

31% less fuel

*I added the **green graph** below as I believe economy could have been even better if given enough HHO rather than constant (~Ozzie):*

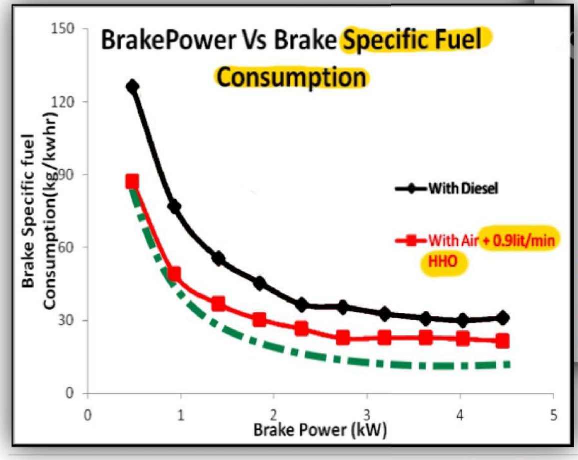

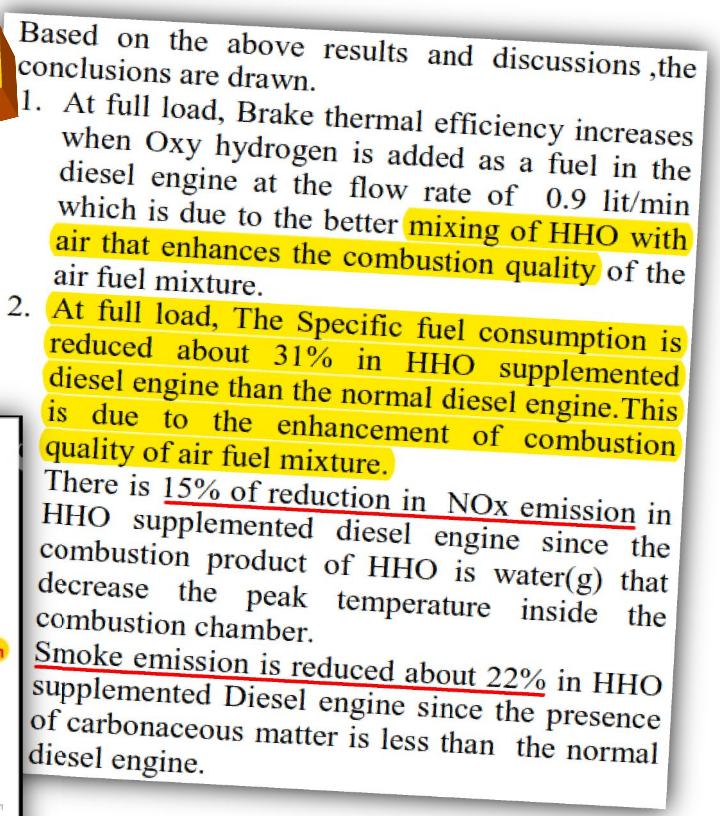

Based on the above results and discussions ,the conclusions are drawn.

1. At full load, Brake thermal efficiency increases when Oxy hydrogen is added as a fuel in the diesel engine at the flow rate of 0.9 lit/min which is due to the better mixing of HHO with air that enhances the combustion quality of the air fuel mixture.
2. At full load, The Specific fuel consumption is reduced about 31% in HHO supplemented diesel engine than the normal diesel engine.This is due to the enhancement of combustion quality of air fuel mixture.

There is 15% of reduction in NOx emission in HHO supplemented diesel engine since the combustion product of HHO is water(g) that decrease the peak temperature inside the combustion chamber.

Smoke emission is reduced about 22% in HHO supplemented Diesel engine since the presence of carbonaceous matter is less than the normal diesel engine.

Hong Kong Polytechnic University (PolyU), 2014

Title: "Combustion, performance, regulated and unregulated emissions of a diesel engine with hydrogen addition"

- Research Institute: Department of Mechanical Engineering, The Hong Kong Polytechnic University, Hung Hom, Kowloon, Hong Kong
- Authors: J.H. Zhou, Prof. C.S. Cheung, C.W. Leung
- Published: 'Applied Energy' (published by Elsevier B.V. of Oxford, UK) Volume 126 (2014), pages 1–12
- Download: http://www.sciencedirect.com/science/article/pii/S0306261914003298

TEST RESULTS:

10%-41% Less Fuel

"An experimental investigation was conducted on the combustion, performance, regulated and unregulated emissions of a diesel engine with naturally aspirated hydrogen at the engine speed of 1,800 rev/min under five engine loads.

"Hydrogen was added to provide 10%, 20%, 30% and 40% of the total fuel energy. Improvement of engine performance can be achieved at medium to high loads.

"At 90% load, abnormal combustion occurs with more than 30% hydrogen addition as indicated by the drastic increase of peak heat release rate, shortened ignition delay and combustion duration. CO/CO_2 and seven kinds of unregulated emissions (except for formaldehyde) can be efficiently reduced. More than 30% of hydrogen addition can reduce the HC emission at low to medium loads. The percentage reduction of NO_x emission is engine load dependent, being positive at low loads and negative at high loads. Drastic increase of NO_2 is observed at low to medium engine loads[85].

---

[85] The problem with NO_2 can be solved in a commercial installation.

"Reductions on particulate mass concentration, particle number concentration and diesel thermal pyrolysis intermediates (olefins and benzene) are associated with the inhibition of polycyclic aromatic hydrocarbons (PAHs) formation. All the unregulated emissions increase at 90% load."

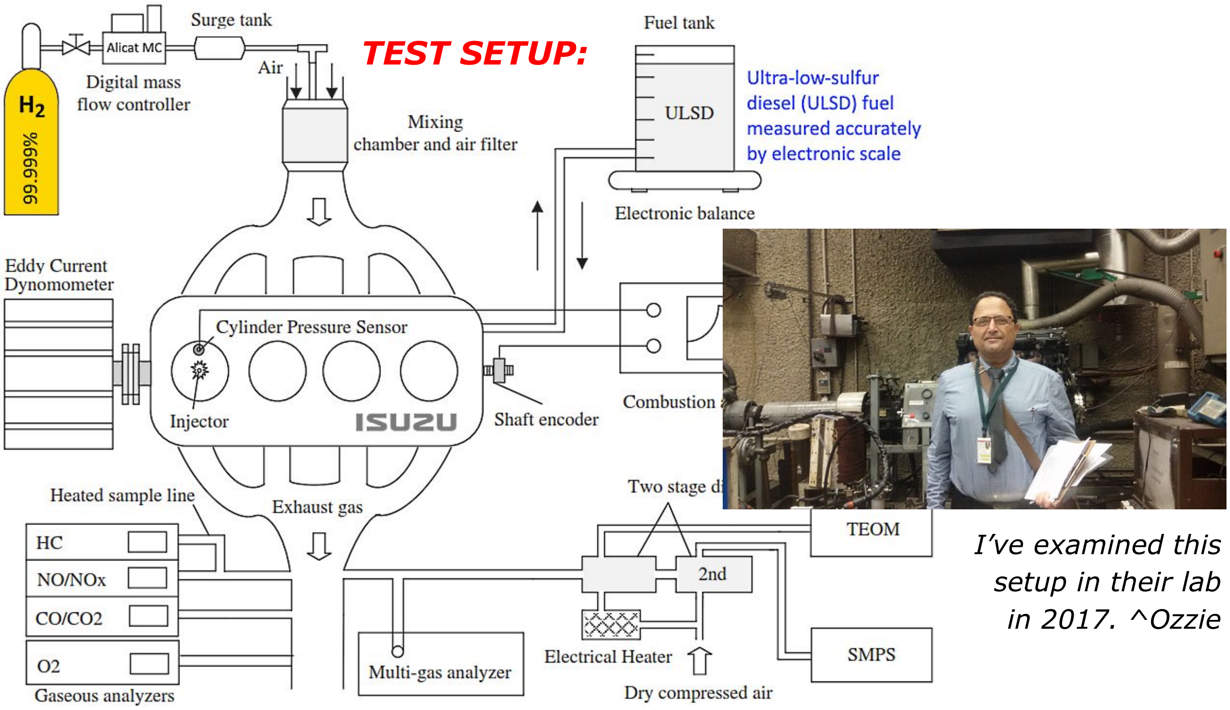

TEST SETUP:

Ultra-low-sulfur diesel (ULSD) fuel measured accurately by electronic scale

I've examined this setup in their lab in 2017. ^Ozzie

The engine they used is a 1995 ISUZU, model 4HF1, which is a naturally aspirated Diesel with four inline cylinders having a total displacement of 4.33 liter with a power rating of 88 kW at 3,200 RPM and compression ratio 19:1

The engine was powered by ULSD (ultra-low sulfur Diesel) fuel and, according to the test mode, specific amounts of the liquid fuel (10%, 20%, 30% and 40%) were replaced by pure hydrogen from a compressed bottle, see top left of the setup diagram.

The air filter functioned as the mixing chamber in order to well premix the hydrogen–air mixture. Hydrogen flow was controlled and measured by a digital mass flow controller (made in Arizona, USA by Alicat Scientific, Inc. www.alicat.com). Additionally, two flashback arrestors (made in Germany by Witt Co., Inc. www.wittgas.com) were equipped on the hydrogen and surge tank pipelines.

In this study, the engine was operated at five engine loads: 10%, 30%, 50%, 70% and 90% of full load. Hydrogen was added to substitute 10, 20, 30 and 40 percent of the total fuel energy, which they designated in the test report as "H10" to "H40", respectively.

FUEL ECONOMY:

All results came out positive, as low as 10.45% and as high as 41.17% better fuel economy.

The amount of hydrogen that was required ranged from 27.90 mg/s (100 liters/hr) up to 383.64 mg/s (1381 liter/hr) at the highest load tested.

Load	"H10"	"H20"	"H30"	"H40"
20%	+10.66%	+20.25%	+30.43%	+41.17%
30%	+11.22%	+21.43%	+29.90%	+40.44%
50%	+10.45%	+20.43%	+29.72%	+40.58%
70%	+10.78%	+21.2%	+30.89%	+40.73%
90%	+10.64%	+20.7%	+29.56%	+40.21%

Let me take a moment to make a non-scientific comparison between these scientific, well-measured results and street wisdom of Hydrogen-On-Demand system owners. We know from Diesel experimenters with HHO (66.66% hydrogen and 33.33% oxygen +electrical charge) that a 0.25 liter PER MINUTE of HHO would be normally ideal for every liter of Diesel engine displacement (half of what's required for gasoline engines). Therefore, a 4.33 liter engine would normally require 64.95 liter/hr of HHO, on the average, for best overall results. We shall see how it plays along under scientific testing such as this study. But I'm sure it would never take 1381 liter/hr or even half of that for Diesel engine of this size. At least now we have a point of reference. ~Ozzie, March 14, 2017.

ENGINE PERFORMANCE:

The researchers concluded as follows:

"It can be concluded that hydrogen addition has apparent effect on diesel combustion process at high engine load and is depicted as sharp increase of peak in-cylinder pressure and peak heat release rate."

EMISSIONS:

The researchers concluded that:

"It is conducive to improving engine performance and reducing CO, CO_2 and PM emissions (mass and number) at medium to high engine loads.

"The effect of NO_2 emission is positive at low engine load and negative at high engine load. A sharp increase of NO_x emission at low engine load merits attention. High level substitution of hydrogen can reduce HC emission at low engine load and the effect is not significant at medium to high engine loads. Hydrogen addition has the potential to reduce unregulated emissions, such as olefins (C_2H_4 and C_3H_6), BT_X (C_6H_6, C_7H_8 and C_8H_{10}) and acetaldehyde (CH_3CHO)."

Palestinian-Swedish Research, 2014

This study validates that water CAN be mixed stably with fuel and that such mixes DO HAVE numerous positive effects on combustion and pollution, as described in Chapter 24.

Document Title: "Phase Behavior of Bicontinuous and Water/Diesel Fuel Microemulsions Using Nonionic Surfactants Combined with Hydrophilic Alcohol Ethoxylates"

☐ Scientists:

- Ibrahim Kayali, Department of Chemistry, Al-Quds University, Jerusalem, Palestine
- Mohammad Karaein, Department of Mechanical Engineering, Birzeit University, Birzeit, Palestine
- Khawla Qamhieh, College of Science & Technology, Al-Quds University, Jerusalem, Palestine
- Salam Wadaah, College of Science & Technology, Al-Quds University, Jerusalem, Palestine
- Wisam Ahmad, Department of Mechanical Engineering, Birzeit University, Birzeit, Palestine
- Ulf Olsson, Department of Physical Chemistry, Lund University, Sweden

☐ Published: Journal of Dispersion Science and Technology, Volume 36 (2015) Issue 1

☐ Date: 10 Feb. 2014

☐ Download: http://www.tandfonline.com/doi/abs/10.1080/01932691.2014.886513

Abstract

Bicontinuous and water-in-diesel microemulsions were formulated using single nonionic alkyl poly glycol ethers combined with hydrophilic alcohol ethoxylates. The phase behavior at temperatures ranging from 0°C to 50°C was investigated. Visual inspection as well as cross-polarizers were used to detect anisotropy. The fish phase diagrams were determined. The presence of the hydrophilic alcohol ethoxylates was necessary to initiate both types of microemulsions.

Increasing the hydrophobic chain length of the surfactant led to a wider range of temperature stability at lower surfactant concentration. Meanwhile, increasing the ethylene oxide units in the headgroup by two units led to a phase diagram that is dominated by lyotropic liquid crystal.

The formulated ***water in diesel microemulsions*** were tested experimentally in a ***4-cylinder diesel engine.*** From this it is observed that the emissions of NO_x, soot, and CO_2 were ***reduced substantially*** compared to neat diesel, while for the CO the reduction occurs just at low load.

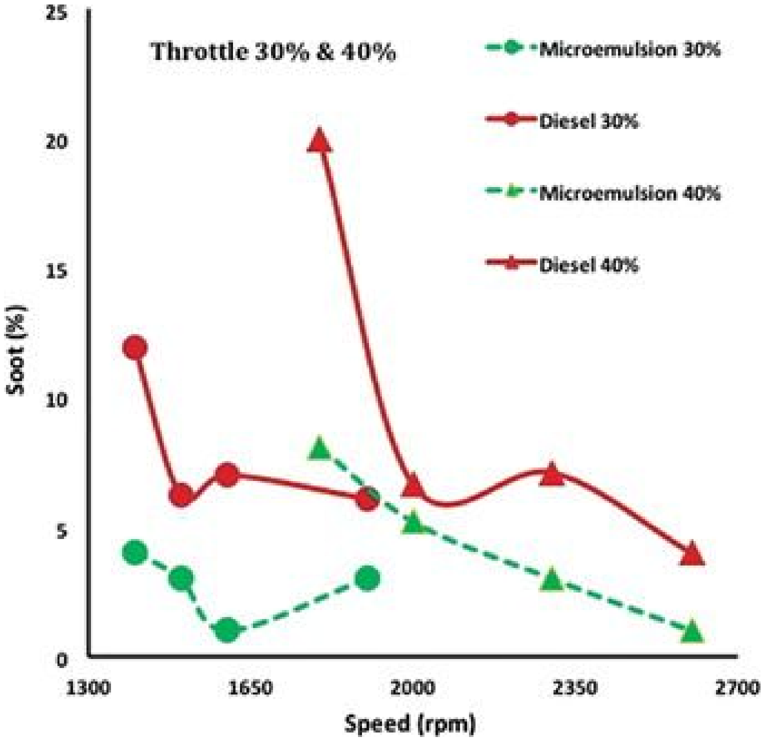

Chapter 24, aptly named "Mix Water with Fuel (and Get Away with It)" provides much more information about this fascinating field of Waterfuel technology: news coverage from around the world spanning many years of R&D, a list of Patents with formulas and tests, and detailed drawings of machines designed – and approved as valid, new and beneficial by the various Patent offices – to mix water and fuel on the industrial level.

Babaria Institute of Technology, 2015

Document Title: "An Experimental Analysis of S.I. Engine Performance with HHO as a Fuel"

- Scientists: Dhananjay Babariya; Jay Oza; Bhavin Hirani; Gaurang Akbari
- Sponsoring institution: Mechanical Department, Babaria Institute of technology, Gujarat, India
- Published: International Journal of Research in Engineering and Technology (IJRET), Vol.4, pp 608-615; eISSN: 2319-1163; pISSN: 2321-7308
- Date: April 2015
- Download: http://esatjournals.net/ijret/2015v04/i04/IJRET20150404105.pdf

Abstract (edited)

Alternate fuel is important --- we spend one third of our income for our vehicle fuelling and the vehicle gives harmful decomposed materials like CO, NO_x, HC, WCBSFC[86], etc., in the form of smoke. These materials all affect the engine performance and pollute the environment. Water is one of the free recourses and by applying the technique, it can be converted into hydrogen with oxygen, its chemical term is HHO and in general "Free Energy".

To avoid these drawbacks, some level of HHO is mixed with filtered air, which is after the air filter system and before the engine intake system of the vehicle. This mixed HHO ignites, releasing the extra electrons into the igniting fuel and thus the added extra energy from the HHO leads [to a] complete burning of the fuel.

HHO is popular and common gas produced from electrolysis. The outcome [to achieve] by this project is increasing [the] mileage of the vehicles up to a certain percentage according to their specification & running conditions of [the] vehicle and also there is a reduction of harmful decomposed material up to a certain percentage. There is increasing in the engine lubricating oil life up to a certain service timing and there is also reduction in suspended carbon particles inside the engine combustion chamber.

---

[86] Weighted Corrected Brake-Specific Fuel Consumption

From the above description we can say that the fuel efficiency and vehicle performance are increased. The emissions of harmful and toxic gases are reduced up to some percentage.

This is the safest method to give clean and healthy environment to the next generation by installing this HHO model in all two- and four-wheeled vehicles.

Engine

- Make: Hero Honda Company Ltd.
- Model: Hero Honda 'Ambition' Motorcycle Engine
- Bore & Stroke: 58.5 x 49.5 mm
- Displacement: 133 cc
- Max. Power: 11.2 PS @8000 rpm
- Max. Torque: 10.5 Nm @6500 rpm
- Ignition: Electronic type
- Cooling: Air

Test Setup:

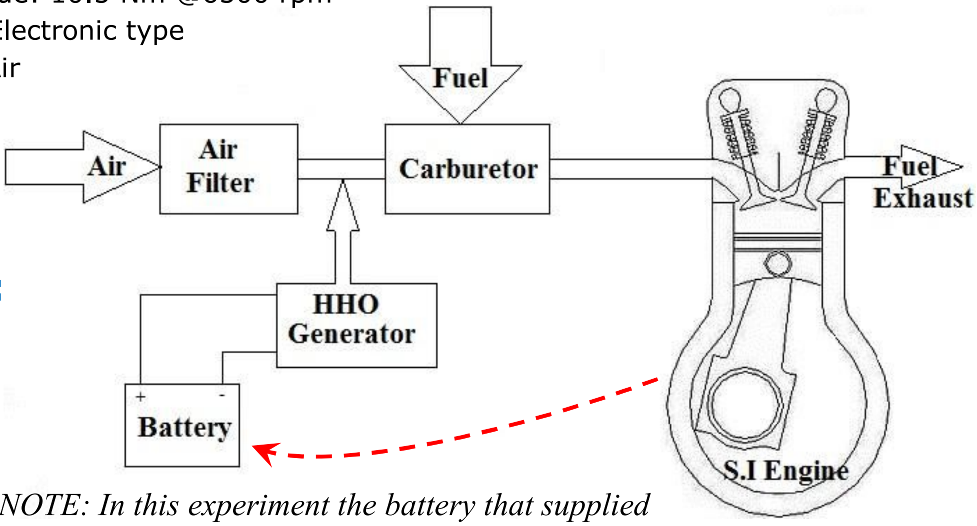

IMPORTANT NOTE: In this experiment the battery that supplied current to the HHO Generator was recharged by engine energy. ~Ozzie

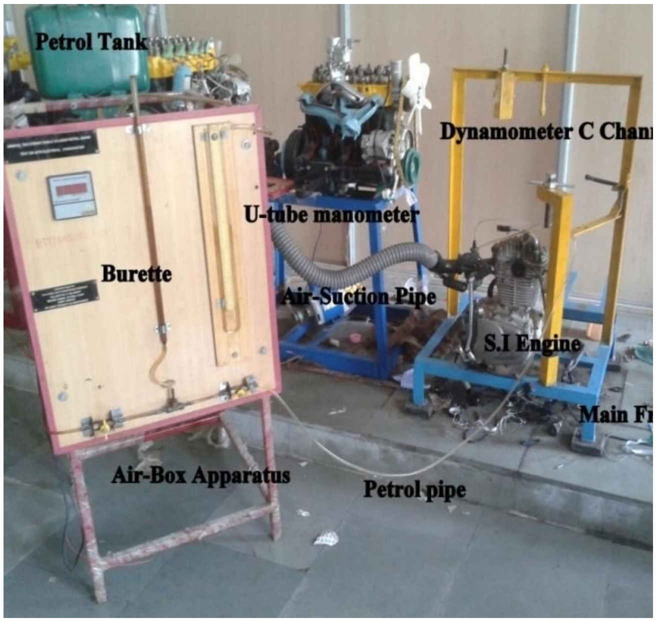

Photos of the experimental setup (left) and the HHO Generator (below) used in the experiment

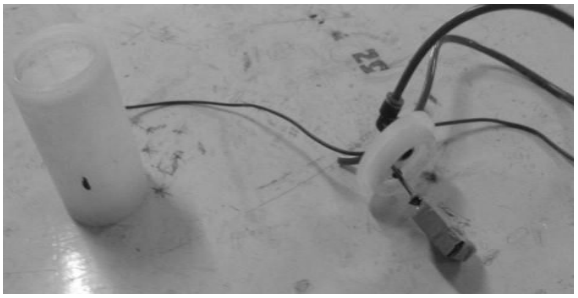

Test Results

- The use of HHO in gasoline engines combustion efficiencies, consequently [reduced] **fuel consumption by 20%.**
- Use of HHO in gasoline engines leads to **reduction in emission of harmful pollutants** such as carbon monoxide and unburnt hydrocarbons.
- Use of HHO in gasoline engine **increases the power output of the engine around 5.7%.**
- The HHO gas kit can be easily constructed and easily integrated with existing engines at low cost.
- **Thermal Efficiency increases around 5%.**

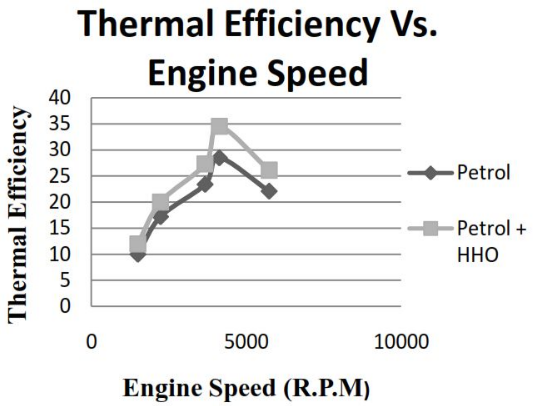

Thermal Efficiency Vs. Engine Speed

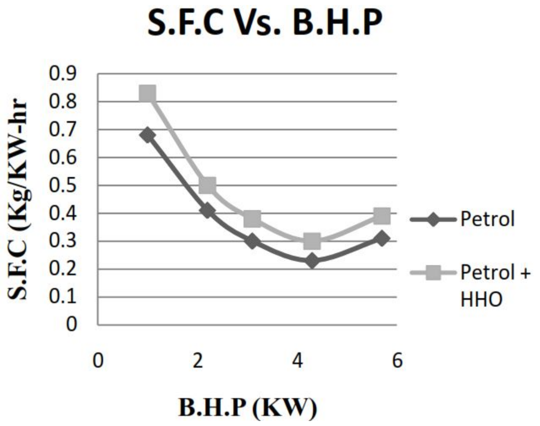

S.F.C Vs. B.H.P

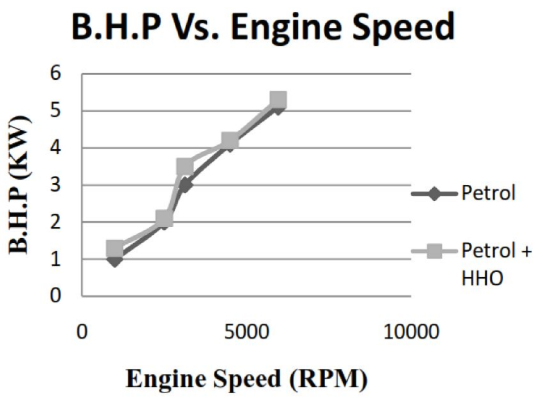

B.H.P Vs. Engine Speed

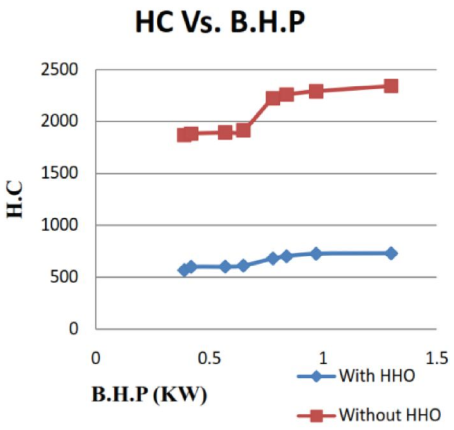

HC Vs. B.H.P

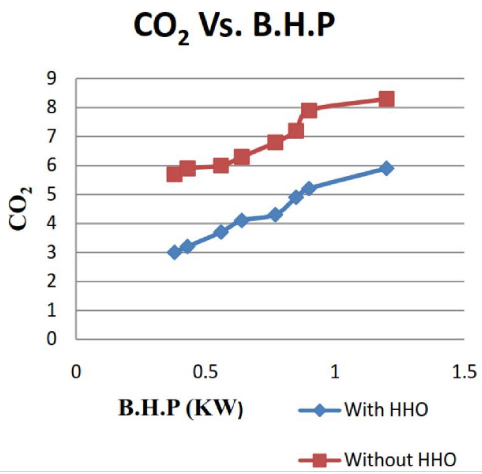

CO_2 Vs. B.H.P

Alexandria University, 2015

Title: "Effect of hydroxy (HHO) gas addition on gasoline engine performance and emissions"

- Research Institute: Mechanical Engineering Department, Faculty of Engineering, Alexandria University, Egypt
- Authors:
  - Mohamed M. EL-Kassaby
  - Yehia A. Eldrainy
  - Mohamed E. Khidr
  - Kareem I. Khidr
- Published:
  - Alexandria Engineering Journal
  - Vol. 66 (pp 243–251), 2016
- Download: http://www.sciencedirect.com/science/article/pii/S1110016815001714

Engine

- Engine model: Skoda Felicia 1.3 GLXi 1.3 L (1,289 cm^3)
- Engine type: In-line, 4 cylinders
- Fuel system: Multi-point fuel injection
- Compression ratio: 9.7:1
- Max. power: 67.66 HP @ 5500 rpm
- Max. torque: 102 Nm @ 3750 rpm

Test Setup

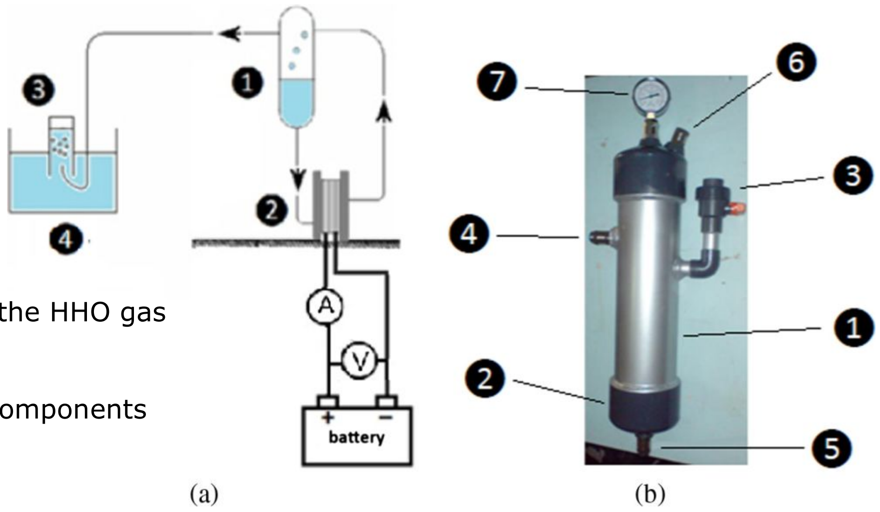

Figure 1:

(a) Schematic diagram of the HHO gas generation system

(b) HHO separation tank components

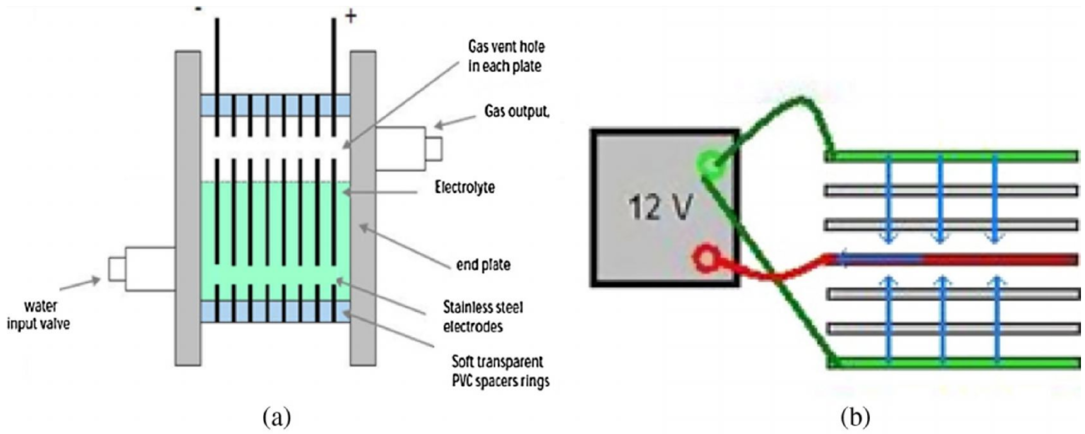

(a) (b)

Figure 2: HHO fuel cell

(a) A schematic diagram of HHO cell

(b) Plates' arrangement (using 2 neutral plates)

(c) HHO dry cell with Water inlet and gas outlet ports

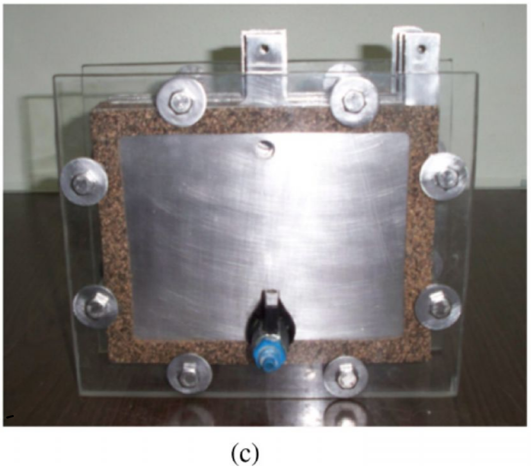

(c)

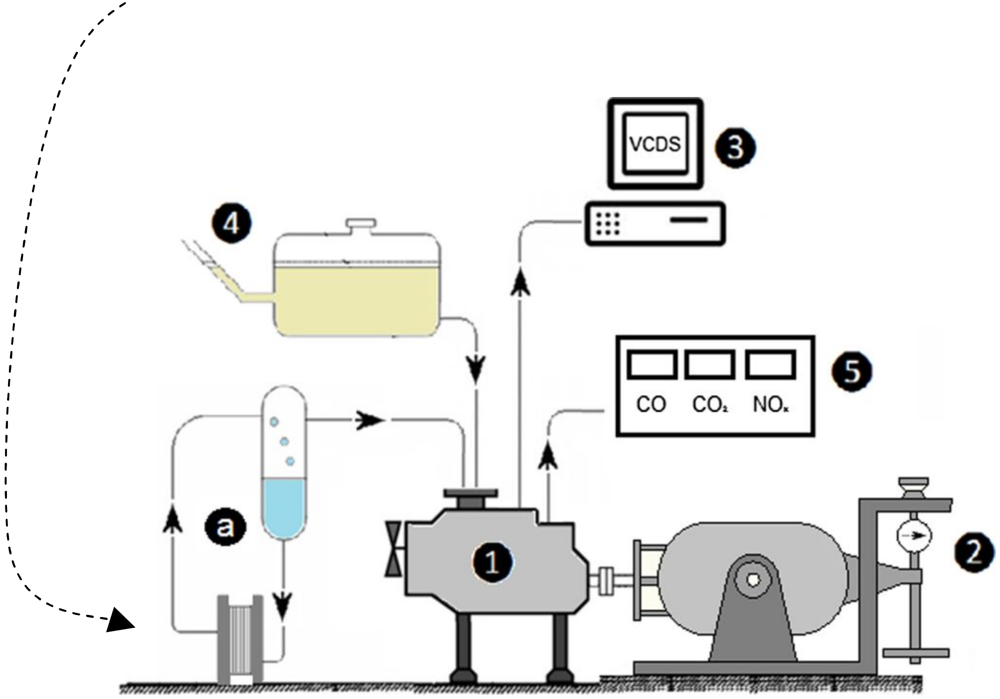

Figure 3: Schematic diagram of engine and test bed description

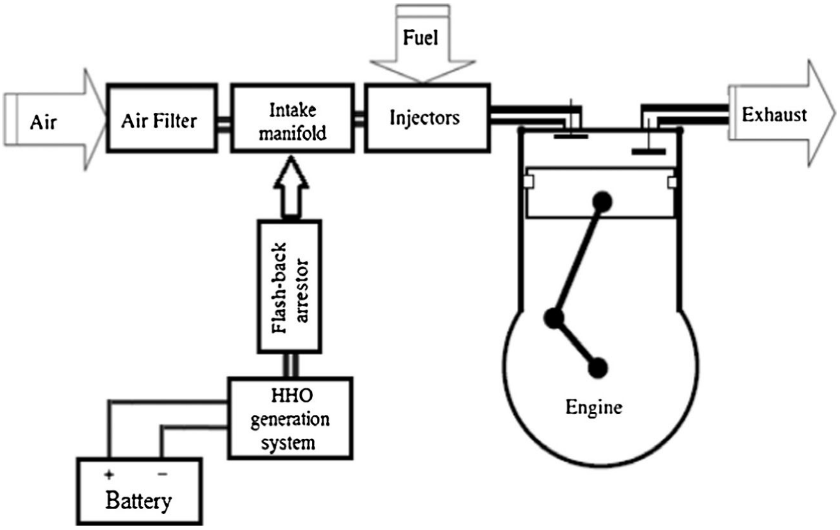

Figure 4: Schematic illustration of the HHO system with safety component installed on the engine

IMPORTANT NOTE: The above diagram doesn't show the energy source of the battery, which is an important datum in such a test. In Paragraph 2.1.2 this science report specifically states that: "HHO cell is supplied by electrical energy from the engine battery which is recharged by the engine alternator." In other words, the energy necessary to split water into hydrogen and oxygen *has* been taken into account (automatically) in the overall measurement of combustion efficiency and fuel consumption.

Test Results

The objective of this work was to construct a simple innovative HHO generation system and evaluate the effect of hydroxyl gas HHO addition, as an engine performance improver, into gasoline fuel on engine performance and emissions. HHO cell was designed, fabricated and optimized for maximum HHO gas productivity per input power. The optimized parameters were the number of neutral plates, distance between them and type and quantity of two catalysts of Potassium Hydroxide (KOH) and sodium hydroxide (NaOH).

The performance of a Skoda Felicia 1.3 GLXi gasoline engine was evaluated with and without the optimized HHO cell. In addition, the CO, HC and NO_X emissions were measured using TECNO TEST exhaust gas analyzer TE488. The results showed that the HHO gas maximum productivity of the cell was 18 L/h when using 2 neutrals plates with 1 mm distance and 6 g/L of KOH. The results also showed:

- **10% increment in the gasoline engine thermal efficiency,**
- **34% reduction in fuel consumption,**
- **18% reduction in CO,**
- **14% reduction in HC,**
- **15% reduction in NO_X.**

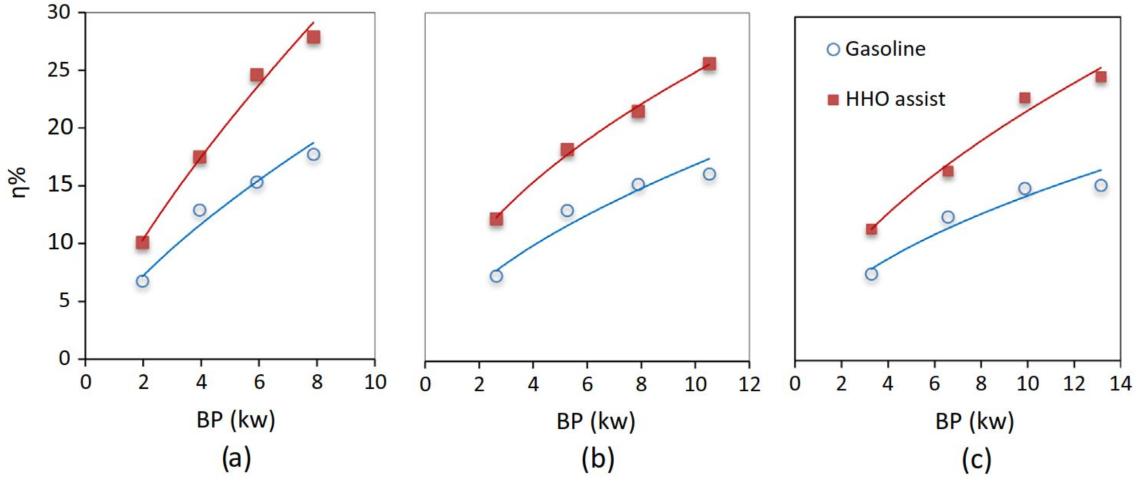

Figure 8: Overall thermal efficiency improvement with HHO over pure gasoline fuel at different engine speeds; (a) 1500 rpm, (b) 2000 rpm, and (c) 2500 rpm.

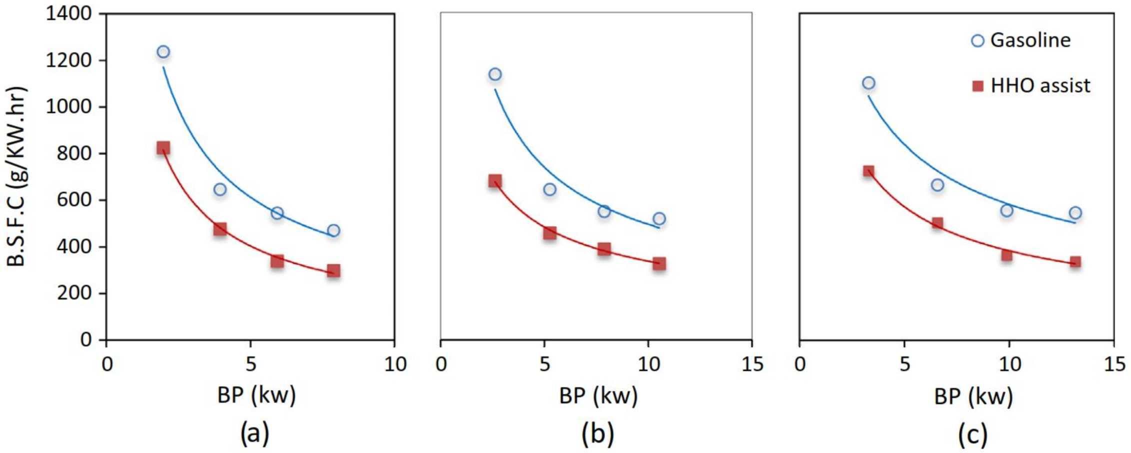

Figure 9: Effect of varying the engine dynamometer load on BSFC; (a) 1500 rpm, (b) 2000 rpm, and (c) 2500 rpm.

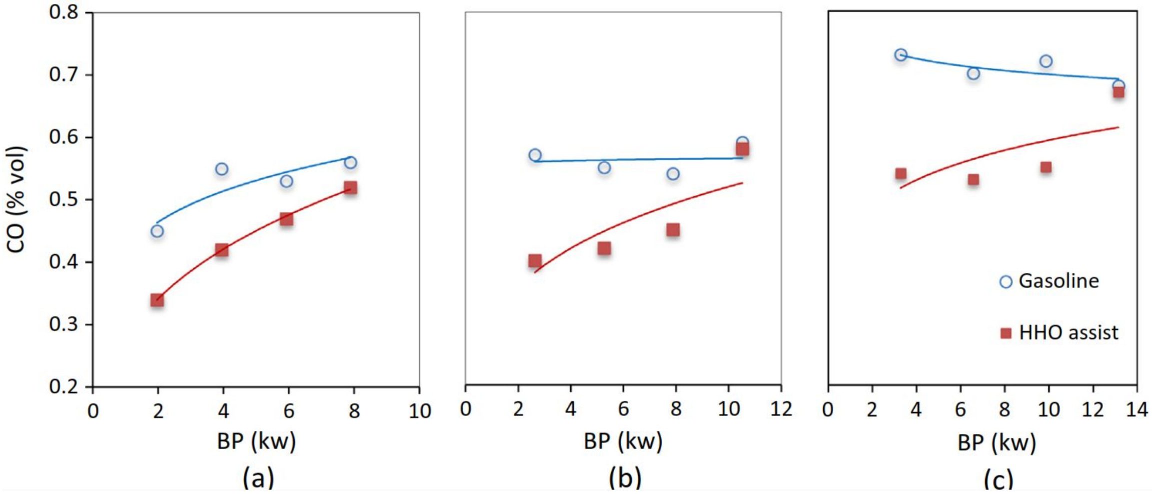

Figure 10: Effect of varying the engine dynamometer load on CO emission; (a) 1500 rpm, (b) 2000 rpm, and (c) 2500 rpm.

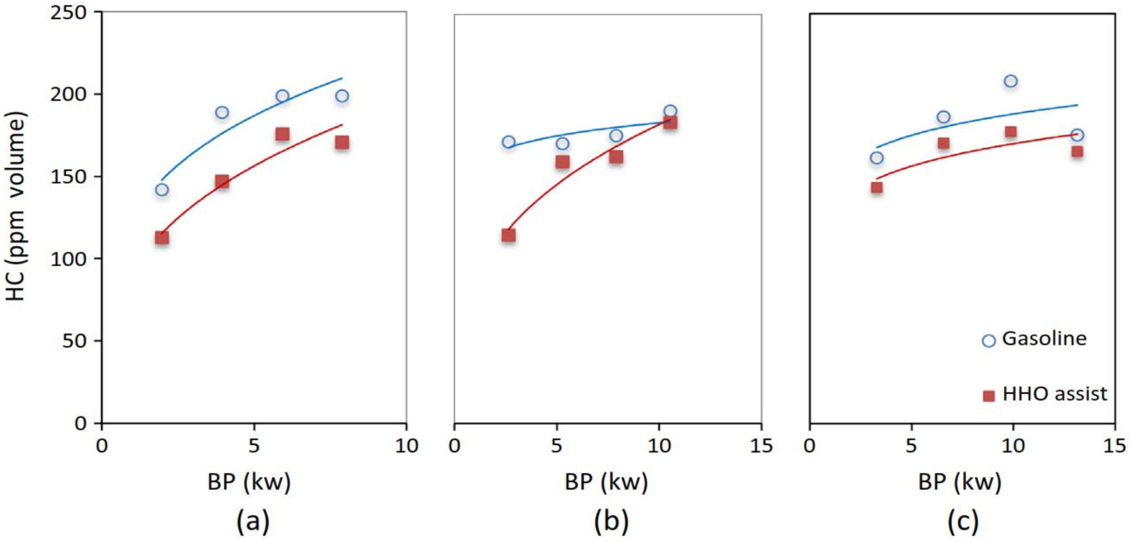

Figure 11: Effect of varying the engine dynamometer load on HC emission; (a) 1500 rpm, (b) 2000 rpm, and (c) 2500 rpm.

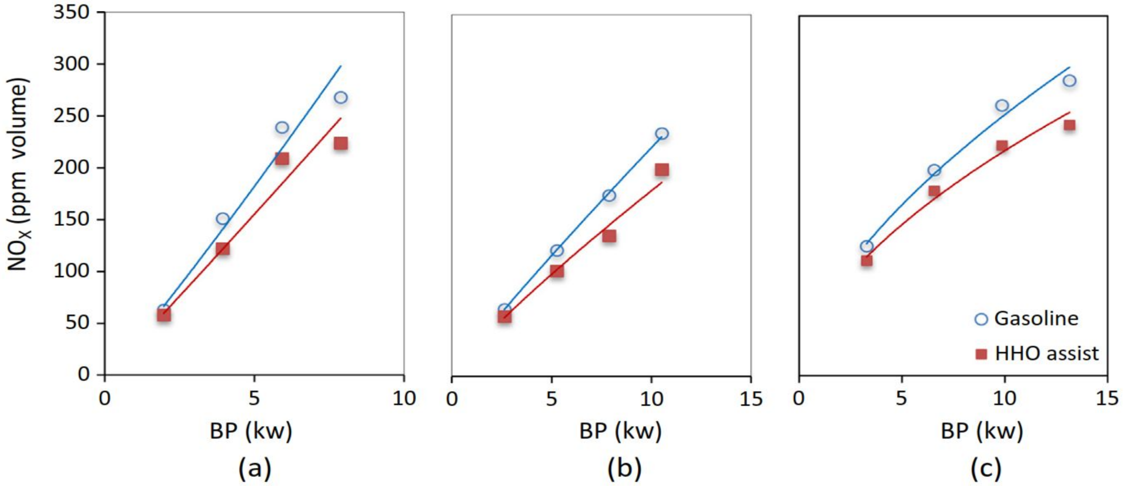

Figure 12: Effect of varying the engine dynamometer load on NO_x emission; (a) 1500 rpm, (b) 2000 rpm, and (c) 2500 rpm.

BOTTOM LINE: The HHO-assisted gasoline mode won, hands down, over the non-assisted mode in all categories of power, efficiency and eco-friendliness – across all conditions of engine load and RPM. Thank you, Alexandria!

Chungnam National University, 2016

Title: *"A new technology to overcome the limits of HCCI engine through fuel modification"*

- Research Institutes: Chungnam National University, South Korea; Stony Brook University, New York, USA, and KP Energy, India
- Authors: GunWoong Bahng, Dongsoon Jang, Youngtae Kim and Misoo Shin
- Published: *Applied Thermal Engineering,* Volume 98, April 5 2016, pages 810-815.
- Download: http://doi.org/10.1016/j.applthermaleng.2015.12.076

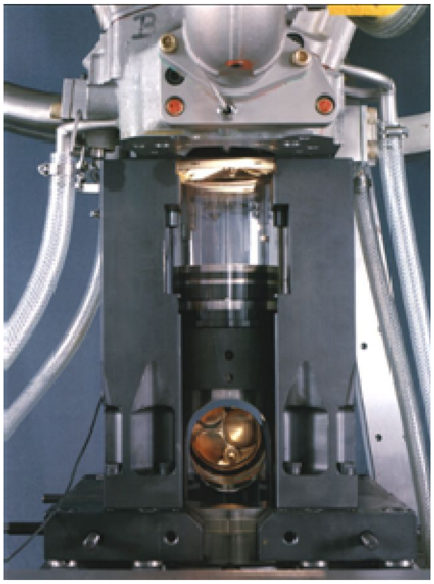

HCCI stands for Homogeneous Charge Compression Ignition, a form of internal combustion that combines the advantages of gasoline and Diesel; a well-mixed fuel and oxidizer (typically air) are compressed to the point of auto-ignition. As in other forms of combustion, this exothermic reaction releases energy that can be transformed in an engine into work and heat.

Highlights

This study proved that HHO can overcome problems of HCCI engine by adopting a Waterfuel modification. Gasoline vapor with HHO gas showed drastic improvement of fuel efficiency – performance of single cylinder engine shows fuel efficiency more than doubled.

Abstract

The energy efficiency of internal combustion engines reached to about 30% only recently. To increase the efficiency, Homogeneous Charge Compression Ignition (HCCI) has been proposed. However, there is no available commercial engine yet. The main problem lies in the delayed heating rate in spite of fast reaction of homogeneous charged state of HCCI with excess air. To overcome this difficulty, a modification of fuel by vaporization of liquid gasoline with water electrolysis gas and air was adopted in order to warrant the fast and high temperature rise. Experiments were carried out with single cylinder engines supplied from four different manufacturers. Experimental results show that fuel consumption was decreased by more than 50% compared to the case of supplying liquid fuel. --- By this method, the drawbacks caused by lean burn in the HCCI engine such as small power range can be overcome.

Yarmouk University, University of Jordan, Mutah University, 2016

Title: *"Green Transportation: Increasing Fuel Consumption Efficiency through HHO Gas Injection in Diesel Vehicles"*

- Research Institutes (all in Jordan): Department of Industrial Engineering, Hijjawi Faculty for Engineering Technology, Yarmouk University; Department of Civil Engineering, Hijjawi Faculty for Engineering Technology, Yarmouk University; Department of Industrial Engineering, Faculty of Engineering and Technology, The University of Jordan; Department of Mechanical Engineering, Faculty of Engineering, Mutah University
- Authors: Ammar A. Al-Rousan, Sharaf Alkheder, Sa'ed A. Musmar, Mohammed Awwad Al-Dabbas
- Published: International Journal of Global Warming, January 2016
- Download: www.researchgate.net/publication/309611351_Green_Transportation_Increasing_Fuel_Consumption_Efficiency_through_HHO_Gas_Injection_in_Diesel_Vehicles

ABSTRACT

Oxy-Hydrogen (HHO) is a non-toxic gas that is used as a supplement to any engine working on Petrol, Diesel, Heavy oil, Acetylene, Propane, Kerosene, or LPG. Through adding HHO to the air intake manifold engine and injection into the cylinders, where HHO mixes with fuel, an increase in mileage of engine performance; enhancement of hydrocarbon fuel combustion; lower emission rates and an increase in fuel efficiency are observed. HHO gas is produced through the electrolysis process of different electrolytes (Hydrogen generator). This study examines the effect of HHO gas, that was directly injected into a single cylinder diesel engine, on the manifold intake air at varying operating speeds of 1500-3000 RPM in diesel engine.

The experiments demonstrated **positive results including (13.87-15.48%) fuel consumption reduction, lower exhaust temperature, and consequently a reduction in pollution.**

Furthermore, results indicated that the injection of **HHO improved the combustion efficiency and increased the brake thermal efficiency by an average of approximately 17.1%.** It also decreased brake specific fuel consumption and gases' exhaust temperature. In addition, the optimal surface area of an electrolyte needed to generate sufficient amount of HHO was found to be thirty six times that of the piston surface area, and also the volume of water needed in the cell is about one and half times that of the engine capacity.

Test Engine Specifications

Model	50KB-2
Suction, discharge port dia. (inch)	2 inch
Type	Single-cylinder,4-stroke air-cooled diesel engine
Max.capacity (m^3/h)	22 m^3/h
Pump Lift (m)	25 m
Max.Suction Head (m)	7 m
Net Weight (kg)	37 kg
Dimension (LxWxH)(mm)	535x420x510
Engine Model	LT170F
Rated Output kw (HP)	2.5 kW (3.4HP)
Displacement (cc)	211 cc
Rated Speed (RPM)	3000 RPM

Fuel cell used in the experiment

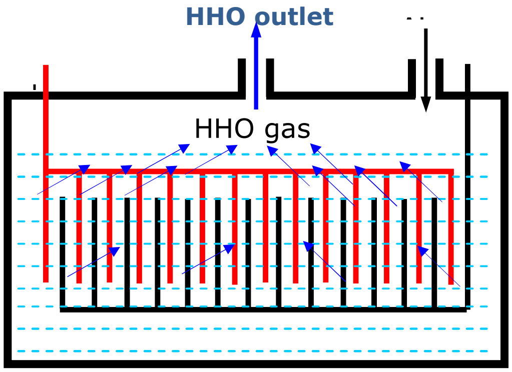

Test Setup

The unit is powered by an alternator, which produces 12 volts when the engine is running regardless the speed. In terms of the consumed electricity, it is argued that such kits consume much electricity. However, the study system uses electricity the same as a normal stereo, nothing more that proves that this argument is mostly false.

---{abridged quotes}---

In this experimental study, the produced hydrogen gas along with oxygen (hydroxy gas, HHO, Brown's gas) was directly injected on the manifold intake of CI engine by a hydroxy system and a hydroxy electronic control unit under various loads causing engine speed to decrease. --- hydrogen and oxygen that are generated by the electrolysis process of water through a unique electrode design. This means that hydrogen and oxygen are in their mono-atomic state (a single atom per molecule) and don't form any O_2 or H_2 molecules (Yilmaz et. al., 2010).

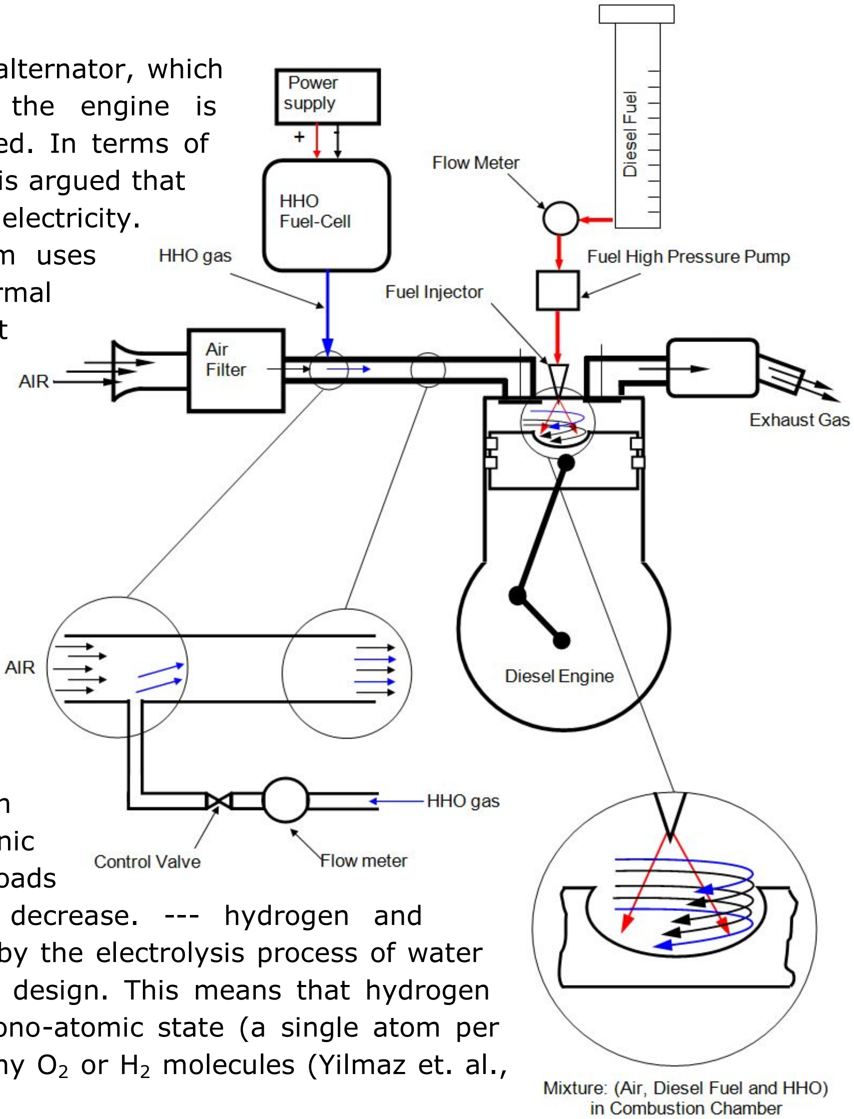

Water was electrically split to form its various elements, oxygen and hydrogen. When HHO mixture was ignited, both explosion and implosion occurred to form water, releasing the energy that was found in the bonds of the two elements in the form of heat. In the mono-atomic portion, there were no atomic bonds to be broken (the bonds of the H_2 and O_2 respectively) before turning back into water. The key difference of HHO gas is that some of the hydrogen and oxygen never go into a diatomic state (Yilmaz et. al., 2010).

HHO generator dissociates water molecules through the process of electrolysis. H_2O (2) Hydrogen atoms and (1) Oxygen atom, when separated, they become combustible forming clean burning gas rather than a liquid. This gas (Separated Hydrogen and Oxygen atoms) is injected into our engines via the air intake lines, which is then added to our Fuel/Air mixture. In the combustion chamber, the pure hydrogen and oxygen give the carbon chains more boost, which enhance combustion of the diesel, indicating that less diesel is required to run the car. It is similar to using a higher cetane fuel. The cleaner diesel burning helps remove undesirable deposits of unburned carbon atoms. In carbureted engines, carbon deposits are cleaned from the engine by pouring ordinary tap water into the carburetor. This effect is similar to HHO system operation: the H_2O is vaporized in the combustion process, then the vaporized hydrogen and oxygen atoms blast carbon deposits away.

Results

The graphs show positive effect of HHO on all variants:

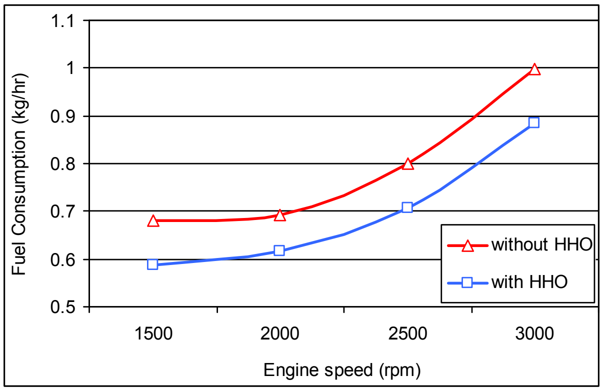

Figure 3. Fuel Consumption versus variable engine speed

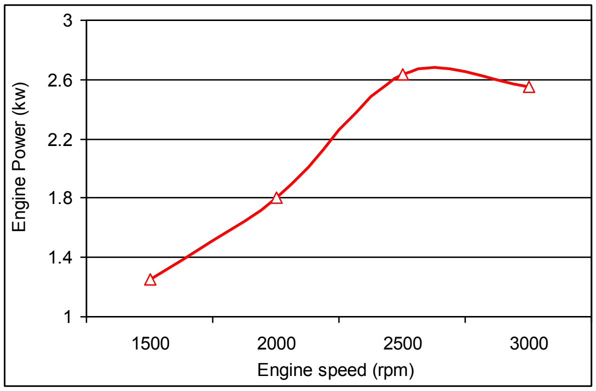

Figure 4. Brake power with variable engine speed

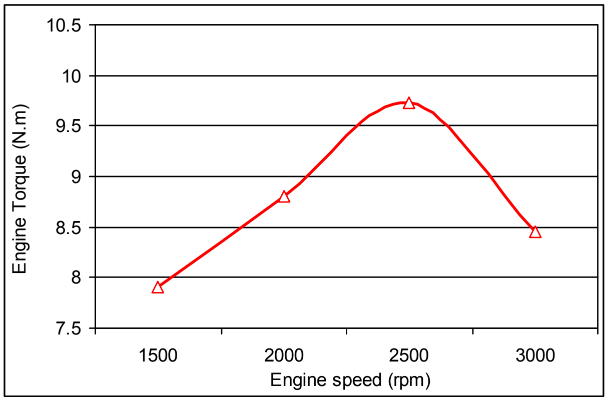

Figure 5. Torque versus engine speed

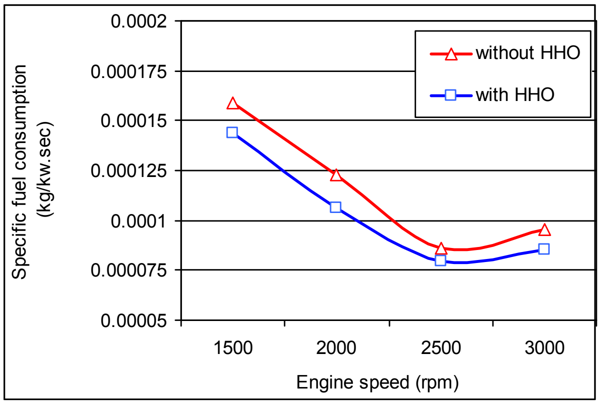

Figure 6. Effect of adding HHO gas on fuel mass flow rate

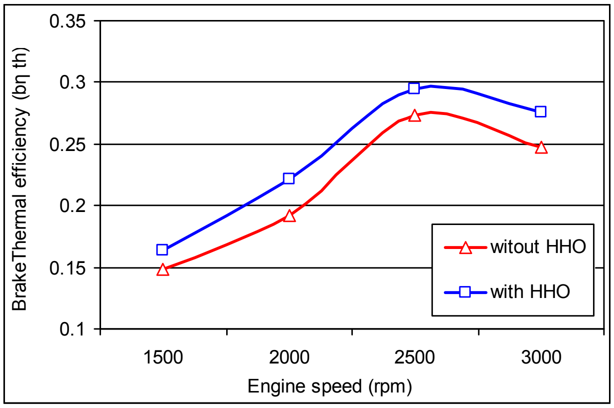

Figure 7. Effect of adding HHO on brake thermal efficiency

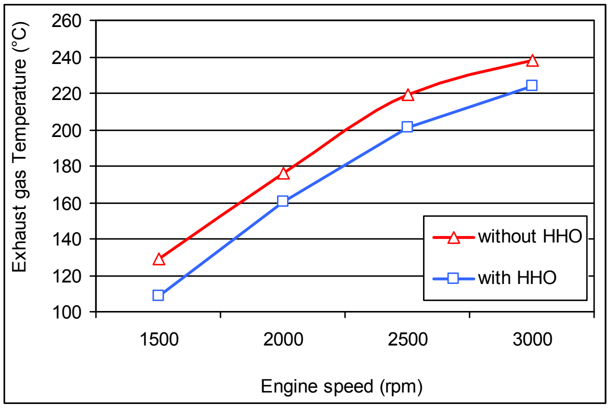

Figure 8. Effect of Adding HHO on exhaust gas temperature

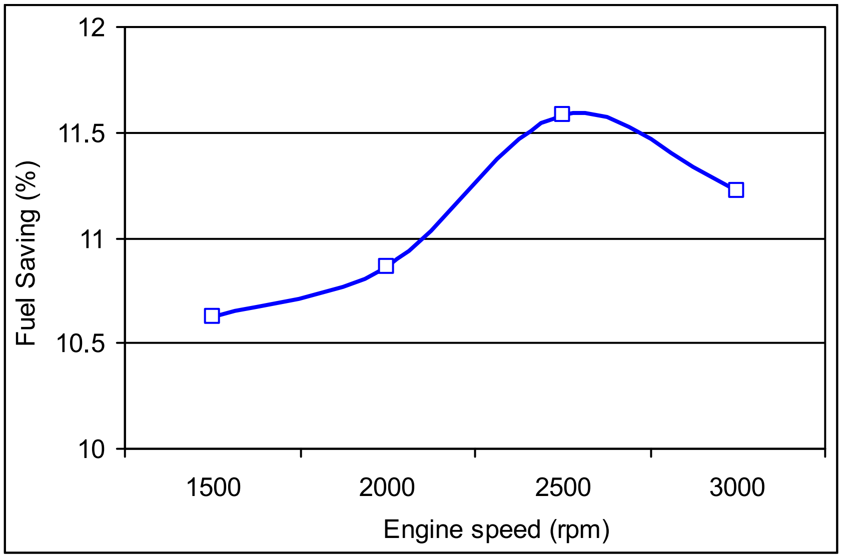

Figure 9. Fuel saving percentage as a result of adding HHO gas

Conclusions

An experimental study was conducted on the effect of HHO blend on a diesel engine performance. For this purpose, a fuel cell for HHO gas generation was designed, manufactured and tested. The generated HHO gas was directly bring in to the air stream. For on-board production of HHO gas an electrolysis principle of water was followed to generate the required amount of HHO gas. The results reveals that savings over than 15% in the fuel consumption are achievable simply by introducing a small amount of HHO gas in the air stream of a one-cylinder diesel engine. This is due to minor existence of hydrogen in the combustion chamber, which has about nine times higher flame speed than diesel, has the ability to enhance overall combustion generating higher peak pressure closer to TDC that has a positive result of higher work-output.

An increase in brake thermal efficiency by 16.1% at 1500 rpm, 16.4% at 2000 rpm, 18.3% at 2500 rpm, and 18.0% at 3000 rpm, respectively were evidence on the positive effect on the combustion efficiency. Furthermore, the brake specific fuel consumption of the engine was reduced by 13.9% at 1500 rpm, 14.1% at 2000 rpm, 15.5% at 2500 rpm, and 15.3% at 3000 rpm, respectively.

Also the emissions of HC, CO_2 and CO were found to be reduced, and the **temperature of exhaust was decreased to 110°C.**

Finally, the fuel cell that has been used is **simple, easily constructed and integrated** with the existing engines at low cost which is (approximately 15 US Dollar for each cylinder).

Kaohsiung University, et.al, 2017

Title: *"The Efficiency Improvement by Combining HHO Gas, Coal and Oil in Boiler for Electricity Generation"*

- ☐ Research Institutes (all in Kaohsiung, Taiwan): Department of Industrial Engineering and Management, and Institute of Photonics and Communications, **National Kaohsiung University of Applied Sciences;** Department of Industrial Engineering and Management, **Fortune Institute of Technology;** Department of Supply Chain Management, **National Kaohsiung Marine University**
- ☐ Authors: Chia-Nan Wang, Min-Tsong Chou, Hsien-Pin Hsu, Jing-Wein Wang, Sridhar Selvaraj. Academic Editors: Paul Stewart and Chris Bingham
- ☐ Published: Energies — Open Access Energy Research, Engineering and Policy Journal www.mdpi.com/journal/energies
- ☐ Date: 20 February 2017
- ☐ Download: www.mdpi.com/1996-1073/10/2/251
- ☐ doi: http://dx.doi.org/10.3390/en10020251

STEAM UP 4%–27% with LESS FUEL, polulants down as much as –94%

Abstract

Electricity is an essential energy that can benefit our daily lives. There are many sources available for electricity generation, such as coal, natural gas and nuclear. Among these sources, coal has been widely used in thermal power plants that account for about 41% of the worldwide electricity supply. However, these thermal power plants are also found to be a big pollution source to our environment. There is a need to explore alternative electricity sources and improve the efficiency of electricity generation. This research focuses on improving the efficiency of electricity generation through the use of hydrogen and oxygen mixture (HHO) gas. In this research, experiments have been conducted to investigate the combined effects of HHO gas with other fuels, including coal and oil. The results show that the combinations of HHO with coal and oil can improve the efficiency of electricity generation while reducing the pollution to our environment.

{NOTE: only excerpts given below; download the complete document – a fascinating study!}

3.1. Testing Arrangements for HHO Gas in an Oil-Fired Boiler

To assess efficiency improvement, the boiler efficiency needs to be measured. In this research, the direct method is used to measure the boiler efficiency. The direct method is also known as the "input–output method" as it only uses the output (steam) and the heat input (i.e., fuel) for efficiency assessment.

Figure 4 shows the test facility required for HHO experiments. It includes the following components:

1. Oil-fired boiler (capacity of 156 L water),
2. Oil tank,
3. Water tank,
4. HHO generator (with the capacity of 7200 L/h),
5. Stack (emission measurement port),
6. Oil feed pump.

Although not credited in the text, note the use of EP-500 made by Epoch Energy Technology Corp. from their own city of Kaohsiung

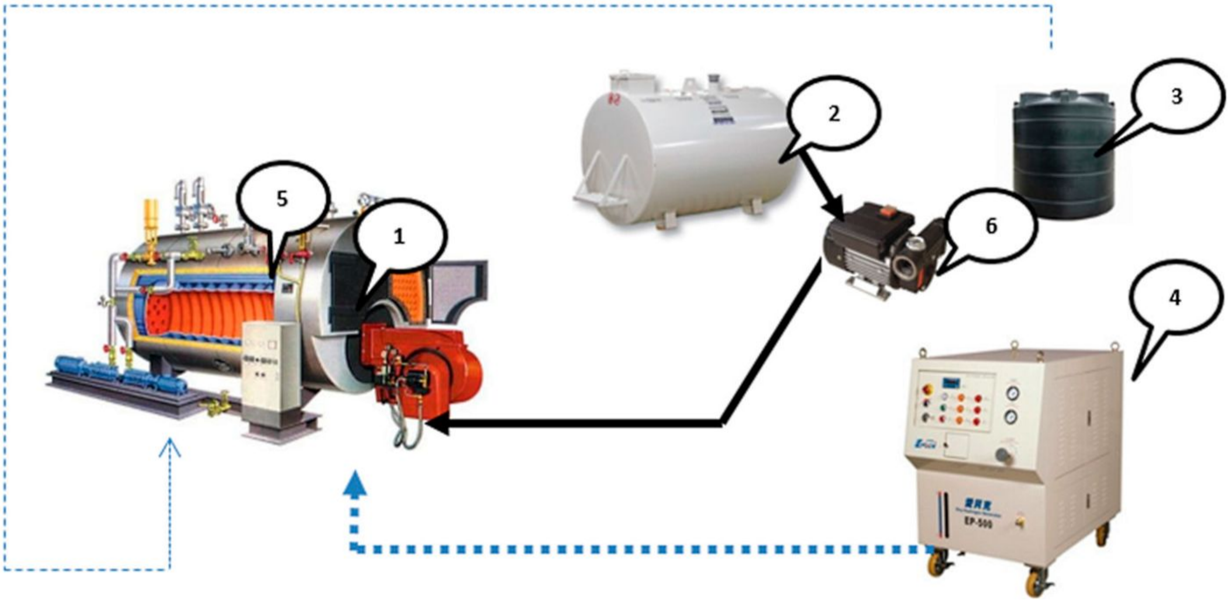

Table 1. Oil-fired Boiler Specification

Description	Unit	Value
Evaporation capacity	kg/h	1500
Heat transfer area	m^2	9.9
Pressure	kg/cm^2	10
Water capacity	L	156
Type of fuel	L	Diesel/Heavy oil
Power	KW	11.5
Weight	kg	1950

EP-500 made by Epoch Energy Technology Corp.
www.oxy-hydrogen.com

4.6. Discussion

This study concentrates on the overall performance of the boiler…the results suggest that adding HHO gas to the coal will improve the efficiency of the boiler. ---

Coal plays a major role in the sustainable development of countries such as India. --- By using HHO, this change will ensure that the coal based power plants will have better respond to reduce contaminations. ---

The result shows the straight forward information that the use of HHO gas will help to maintain a clean environment as well prolonging the availability of coal for the future with the improved operating characteristics of the boiler. Thus, this breakthrough method will, without any doubt, be an efficient contribution to the world.

5. Conclusions

- Our experiment shows that the combination of HHO with coal can reduce coal consumption. Specifically, the addition of 1 kg of HHO can lead to the saving of 7.9 kg for Indian lignite and 5.4 kg for sub-bituminous. These benefits mainly come from the high GCV[87] of HHO that enables more efficient combustion in the boiler.
- The combination HHO with coal can also improve the boiler efficiency. Specifically, the addition of 1 kg HHO gas with Indian lignite can improve efficiency by 0.2%; the addition of 1kg HHO gas with sub-bituminous can improve the efficiency by 0.14%.
- From Table 8, it is noted that the combinations of HHO with heavy oil (HO) have little effect in reducing HO consumption. However, these combinations can significantly increase the steam production (4%–27%). The more HHO, the higher the steam production.

Table 8. Average increases (%) of HO consumption and steam production when combining HO with various amounts of HHO.

Item	HO Consumption (L)	Steam Production (L)	HO Consumption Increase (%)	Steam Production Increase (%)
HO	27.67	363.67	0%	0%
HO + HHO (1800)	27.33	377.67	−1%	**4%**
HO + HHO (3600)	27.33	408.67	−1%	**12%**
HO + HHO (5400)	27.67	434.67	0%	**20%**
HO + HHO (7200)	27.67	460.33	0%	**27%**

- From Table 10, it is noted that the combinations of HHO with light diesel oil (LDO) have little effect in reducing LDO consumption. However, these combinations can significantly increase the steam production (4%–21%). The more HHO, the higher the steam production.

---

[87] GCV: Gross Calorific Value (determines coal grade)

Table 10. Average increases (%) of LDO consumption and steam production when combining LDO with various amounts of HHO.

Item	Oil Consumption (L)	Steam Production (L)	Increase in Oil Consumption (%)	Increase in Steam (%)
LDO	28.00	382.67	0%	0%
LDO + HHO (1800)	27.67	398.00	−1%	**4%**
LDO + HHO (3600)	27.67	424.67	−1%	**11%**
LDO + HHO (5400)	27.67	442.00	−1%	**16%**
LDO + HHO (7200)	27.33	464.00	−2%	**21%**

- The additions of HHO to HO or LDO can lead to fewer emissions of various particles in the exhaust gas. In general, the more HHO, the fewer the emissions of various particles in the exhaust gas. From Table 12, it is noted that the combinations of HO with various amounts of HHO can significantly reduce the amount of emissions of various particles, including CO, CO_2, NO_2, and HC. For the CO especially, it can reduce from 51% up to 71% of emissions.

Table 12. The reduction amounts (%) of various particles when combining HO with various amounts of HHO.

Item	O_2 (%)	CO	CO_2	NO	NO_2	SO_2	HC
HO	0	0	0	0	0	0	0
HO + HHO (1800)	51%	−51%	−12%	−1%	−28%	−0.018%	−71%
HO + HHO (3600)	56%	−71%	−14%	−3%	−14%	−3%	−85%
HO + HHO (5400)	55%	−72%	−12%	−4%	−8%	−5%	−87%
HO + HHO (7200)	60%	−75%	−18%	−5%	−33%	−16%	−94%

- From Table 14, it is noted that the combinations of LDO with various amounts of HHO can reduce a significant amount of emissions of various particles of CO, CO_2, NO, NO_2, SO_2, and HC.

Table 14. Average reductions (%) of various particles when combining DO with various amounts of HHO.

Item	O_2	CO	CO_2	NO	NO_2	SO_2	HC
DO	0	0	0	0	0	0	0
DO + HHO (1800)	130%	−73%	−18%	−16%	−12%	−84%	−43%
DO + HHO (3600)	147%	−78%	−21%	−16%	−38%	−60%	−64%
DO + HHO (5400)	144%	−80%	−18%	−15%	−45%	−71%	−78%
DO + HHO (7200)	137%	−81%	−21%	−16%	−41%	−91%	−75%

101 Years of Official Validations for Supplemental Hydrogen/Brown's Gas

YEAR, COUNTRY, INSTITUTE	ENGINE TYPE	ECONOMY BOOSTER	FUEL SAVED
1916-USA: Charles H. Frazer, US Patent 1,262,034	Gasoline	HHO	Positive
1916-USA: Prof. Howard M. Raymond, Cyclopedia of Modern Shop Practice (Chapter 23 below)	Welding etc.	HHO	n/a
1974-USA: NASA & Society of Automotive Engineers	Gasoline	H_2	General
1976-USA: NASA & Teledyne Continental Motors, Aircraft Products Division	Aircraft Diesel and gasoline	H_2	General
1977-USA: Prof. Yull-Brown, US Patent 4,014,777	Welding etc.	HHO	n/a
1995-USA-Japan: Yoshiro Nakamats	Gasoline	H_2+O_2	Various positive
2000-Turkey: Kocaeli University	Gasoline	HHO	35-40%
2005-Korea: Yonsei University	Incinerator	HHO	n/a
2008-Australia: University of South Australia	Diesel	HHO	15%
2008-Canada: Environmental Technology Verification (ETV)	Diesel	HHO	4.44%
2009-USA: National Hydrogen Association	Gas quality	HHO	General
2010-Turkey: Çukurova University	Diesel+gasoline	HHO	16.3%
2010-USA: Jacob Wall's Affirmative Report	Diesel+gasoline	HHO	Up to 43%
2011-Jordan: Mutah University	Gasoline	HHO	20-30%
2012: SMK Lutong, Malaysia +University of Maryland, USA	Incinerator	HHO	n/a
2013-India: Anna University	Diesel	HHO	31%
2013-India: SOA University +Raman College of Engineering	Gasoline	HHO	15-25%
2013-Sweden: Gas Quality Verification	Gas quality	HHO	10%
2014-European Commission: SafeFlame Project	Welding etc.	HHO	n/a
2014-Hong Kong Polytechnic University	Diesel	H_2	10-41%
2015-Egypt: Alexandria University	Gasoline	HHO	34%
2015-India: Babaria Institute of Technology	Gasoline	HHO	20%
2016-Korea: Chungnam-National-University	HCCI[88]	HHO	50%
2016-Jordan: Yarmouk University, University of Jordan, Mutah University	Diesel	HHO	15%
2017-Taiwan: National Kaohsiung University of Applied Sciences, National Kaohsiung Marine University, Fortune Institute of Technology	Industrial Boiler	HHO	Steam up 4%–27%, CO down 51%-71%

---

[88] HCCI: Homogeneous Charge Compression Ignition (type of engine), see Glossary.

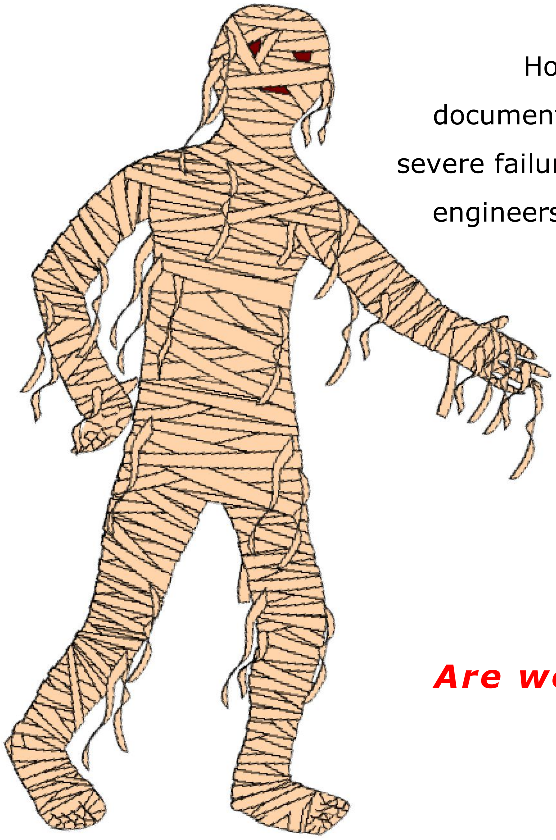

How would you summarize these "Smoking Gun" documents? If you ask me, I think this is evidence of a severe failure in communication… Our scientists, our auto engineers, our environment specialists and government agents HAVE KNOWN the benefits of ***supplemental*** *HHO since 1916 – yet* ***101 years later*** *the potential benefits are STILL UNKNOWN to most fleet owners, engine operators, drivers, and nearly all mechanics.*

101 years!!!

Are we brain-dead as a society?!

Question:

- ***Why haven't they spoken?***

Answer:

- *They have!!* *You've seen the trail of documents from 1916 till now… the scientists and engineers have spoken – but we haven't been listening.*

So whose "smoking gun" is it, after all?

What do you think?

The technology has been ***known AND PUBLISHED***. We just didn't see it, partly because the Internet was not there to help share information faster than it can sink into oblivion. In any case, this is now changing – and changing very quickly. In the following chapters you will be able to see a wealth of documentation created by many scientists and engineers – who have worked very hard to tell us all about water, hydrogen and Waterfuel, and have provided us with ample evidence for the validity of their findings.

SCIENCE PAPERS BY THE SOCIETY OF AUTOMOTIVE ENGINEERS

Who are these people?

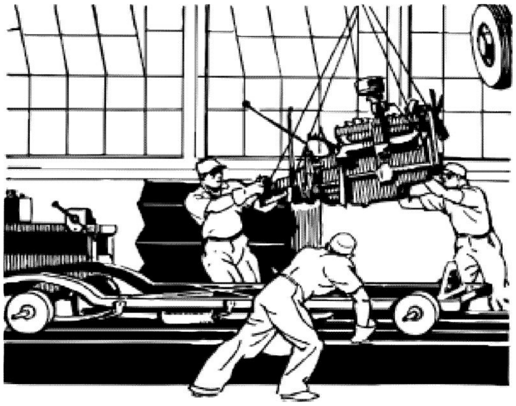

The Society of Automotive Engineers (SAE) is a huge organization with over 120,000 members! Between the many famous members of the past, you'll find names like Henry Ford, Thomas Edison and Orville Wright. Today more than a quarter of the Society's membership is from outside of North America.

The list below is a collection of references found in official SAE publications of the past four decades. Today the website that publishes SAE magazines, for SAE members, is http://articles.sae.org/automotive/browse/

The links below allow the download of each technical paper. The SAE charges a small fee for each download. The abstract of each document tells you if it is of any interest to you.

Actual documents I have found

The documents below are samples out of the wealth of knowledge available from the SAE on the benefits of supplemental hydrogen, and related documentation by top experts. Their entire catalog can be found at http://SAE.org

Document Title: Engine Performance and Emissions Near the Dilute Limit With Hydrogen Enrichment Using An On-Board Reforming Strategy

- Author: Ather A. Quader; John E. Kirwan; Malcolm J. Grieve (Delphi Corporation, Kent, UK)
- SAE Document Number: 2003-01-1356
- Published: March 2003
- http://www.sae.org/technical/papers/2003-01-1356

ABSTRACT:
This paper describes engine research — which supports our program to develop a gasoline engine management system (EMS) with an on-board reformer to provide near-zero tailpipe emissions. With this approach, the reformer converts gasoline (or another hydrocarbon-containing fuel) into reformate, containing hydrogen and CO. Reformate has very wide combustion limits to enable SI [spark-ignited] engine operation under very dilute conditions (either ***ultra-lean*** or with heavy EGR concentrations). In previous publications, we have presented engine dynamometer results showing very low emissions with bottled reformate. This paper shows the sensitivity of engine emissions and performance to operating near the dilute limit with H_2 enrichment using both bottled reformate and an actual reformer prototype. It discusses the additional advantages of the system for supplemental heating to the passenger compartment and the vision of substantially increasing powertrain efficiency — by using a solid oxide fuel cell (SOFC) APU as the source of reformate.

Document Title: Emission Control With Lean Operation Using Hydrogen-Supplemented Fuel

- Authors: R.F. Stebar; F.B. Parks (General Motors Corporation)
- Document Number: 740187
- Published: February 1974
- http://www.sae.org/technical/papers/740187

ABSTRACT:
Hydrogen-supplemented fuel was investigated as a means of extending lean operating limits of gasoline engines for control of NOx. Single-cylinder engine tests with small additions of hydrogen to the fuel resulted in very low NOx and CO emissions for hydrogen-isooctane mixtures leaner than 0.55 equivalence ratio. Significant thermal efficiency improvements resulted from the extension beyond isooctane lean limit operation. However, HC emissions increased markedly at these lean conditions. A passenger car was modified to operate at 0.55-0.65 equivalence ratio with supplemental hydrogen. Vehicle emissions, as established by the 1975 Federal Exhaust Emissions Test, demonstrated the same trends as the single-cylinder engine tests. The success of the hydrogen-supplemented fuel approach will ultimately hinge on the development of both a means of controlling hydrocarbon emissions and a suitable hydrogen source on board the vehicle. Reported efforts to develop a satisfactory onboard hydrogen generator (gasoline reformer) appear restricted by fuel economy considerations.

Document Title: Onboard Hydrogen Generation for Hydrogen Injection Into Internal Combustion Engines

- Authors: Krister Sjarstrarm; Sarren Eriksson; Gunnar Landqvist (Dept. of Chemical Technology, The Royal Institute of Technology, Stockholm, Sweden)
- SAE Document Number: 810348
- Published: February 1981
- http://www.sae.org/technical/papers/810348

ABSTRACT:
A system is described for onboard hydrogen generation in an internal combustion engine. The hydrogen is produced from methanol reacting with steam in recirculated exhaust gas over a Ni-catalyst. The energy for the reaction is supplied by the exhaust waste heat. The hydrogen is used to extend the lean limit of the gasoline in order to achieve higher efficiency and lower pollutant emissions. A theoretical study of the required amount of recirculated exhaust gas has been made and the energy efficiency of the reactor has been calculated. The produced and the required amount of hydrogen have also been calculated. A stationary test engine using the system is presented. The results show a potential for very low pollutant emissions with an increased energy efficiency compared to that of a conventional engine.

Document Title: A Study of Combustion of Hydrogen-Enriched Gasoline in a Spark Ignition Engine

- Authors: Nicolae Apostolescu; Radu Chiriac (University Politehnica of Bucharest, Bucuresti, Romania)
- SAE Document Number: 960603
- Published: February 1996
- http://www.sae.org/technical/papers/960603

ABSTRACT:
An investigation has been done on the influence of small amounts of hydrogen added to hydrocarbon-air mixtures on combustion characteristics. The effect of hydrogen addition to a hydrocarbon-air mixture was first approached in an experimental bomb to measure the laminar burning velocity and the shift of lean flammability limit. Experiments carried out with a single-cylinder four-stroke SI [spark-ignited] engine confirmed the possibility of expanding the combustion stability limit, which correlates well with the general trend of enhancing the rate of combustion. An increase of brake thermal efficiency has been obtained with a reduction of HC emissions; the NOx emissions were higher, except for very lean mixtures.

Document Title: Performance and Fuel Consumption Estimation of a Hydrogen Enriched Gasoline Engine At Part-Load Operation

- Author: Gustavo Fontana (Universita di Cassino, Italy)
- SAE Document Number: 2002-01-2196
- Published: July 2002
- http://www.sae.org/technical/papers/2002-01-2196

ABSTRACT:
Hydrogen and gasoline can be burned together in internal combustion engines in a wide range of mixtures. In fact, the addition of small hydrogen quantities increases the flame speed at all gasoline equivalence ratios, so the engine operation at very lean air-gasoline mixtures is possible. In this paper, the performance of a spark-ignition engine, fuelled by hydrogen-enriched gasoline, has been evaluated by using a numerical model. A hybrid combustion model for a dual fuel, according to two one-step overall reactions, has been implemented in the KIVA-3V code. The indicated mean pressure and the fuel consumption have been evaluated at part-load operating points of a S.I. engine designed for gasoline fuelling. In particular, the possibility of operating at wide-open throttle, varying the equivalence ratio of air-gasoline mixture at fixed quantities of the supplemented hydrogen, has been studied.

Document Title: Influence of Hydrogen-Rich-Gas Addition on Combustion, Pollutant Formation and Efficiency of An IC-SI[89] Engine

- Authors: Enrico Conte; Konstantinos Boulouchos (ETH – Swiss Federal Institute of Technology, Zurich, Switzerland)
- SAE Document Number: 2004-01-0972
- Published: March 2004
- http://www.sae.org/technical/papers/2004-01-0972

ABSTRACT:
The addition of hydrogen-rich gas to gasoline in an Internal Combustion Engine seems to be particularly suitable to arrive at a near-zero emission Otto engine, which would be able to easily meet the most stringent regulations. In order to simulate the output of an on-board reformer that partially oxidizes gasoline, providing the hydrogen-rich gas, a bottled gas has been used. Detailed results of our measurements are here shown, such as fuel consumption, engine efficiency, exhaust emissions, analysis of the heat release rates and combustion duration, for both pure gasoline and blends with reformer gas. Additionally simulations have been performed to better understand the engine behavior and NOx formation.

Results show that: When running at λ=1 and without EGR, addition of hydrogen-rich gas produces a significant shortening of the very first phase of combustion (inflammation phase) rather than of the remaining combustion process; Addition of hydrogen-rich gas allows to run the engine at extremely high λ or EGR rate; When running at the highest possible λ or EGR (limited by COV increase) the duration of all phases of combustion remains almost unaffected by the diluents; In all conditions a significant decrease of UHC and NOx emissions has been observed; In all conditions a significant increase of engine efficiency has been measured, which seems to be enough to compensate and overcome the losses due to the partial oxidation of Gasoline in the Reformer..

---

[89] Internal Combustion—Spark Ignition.

Document Title: A Quasi-Dimensional Model for Estimating the Influence of Hydrogen- Rich Gas Addition on Turbulent Flame Speed and Flame Front Propagation in IC-SI Engines

- Authors: Enrico Conte; Konstantinos Boulouchos (ETH – Swiss Federal Institute of Technology, Zurich, Switzerland)
- SAE Document Number: 2005-01-0232
- Published: April 2005
- http://www.sae.org/technical/papers/2005-01-0232

ABSTRACT:
Addition of hydrogen-rich gas to gasoline in internal combustion engines is gaining increasing interest, as it seems suitable to reach near-zero emission combustion, able to easily meet future stringent regulations. Bottled gas was used to simulate the output of an onboard reformer (21% H_2, 24% CO, 55% N_2). Measurements were carried out on a 4-stroke, 2-cylinder, 0.5-liter engine, with EGR, in order to calculate the heat release rate through a detailed two-zone model. A quasi-dimensional model of the flame was developed: it consists of a geometrical estimate of the flame surface, which is then coupled with the heat release rate. The turbulent flame speed can then be inferred. The model was then applied to blends of gasoline with hydrogen-rich gas, showing the effect on the flame speed and transition from laminar to turbulent combustion. Comparison between the quasi-dimensional model and the conventional Metgalchi-Keck + Damköhler model gave a general validation for gasoline operation and suggested a modification of the usual time-delay function for transition from laminar to turbulent flame. Results give new insight in previous findings from the heat release calculation: the effect of hydrogen-rich gas addition on flame speed is predominant in the early phase of the flame propagation, and the effect of the high curvature of the flame at the onset of combustion, compensated by the high mass diffusivity of hydrogen, is believed to be the physical reason to such behavior.

Document Title: An Experimental Study on Combustion of Gasoline-Hydrogen Mixed Fuel

- Authors: Li Jing-ding; Lu Ying-ging; Du Tian-shen (Zhejiang University, China)
- SAE Document Number: 830897
- Published: April 1989
- http://www.sae.org/technical/papers/830897

ABSTRACT:
The gasoline-air mixture added with a certain amount of hydrogen used as an engine fuel can extend the ignition limits, increase the rate of flame propagation and accelerate the combustion rate of the lean mixture; so that the fuel economy and emission characteristics of the engine are both improved herewith. The testing results of a single cylinder engine and a four cylinder automotive engine using such kind of dual fuel to improve their thermal efficiencies and fuel economy as well as to decrease their exhaust emissions are described in this paper.

Document Title: Investigating Combustion Enhancement and Emissions Reduction With the Addition of 2hD2 + OD2 to a SI Engine

- Authors: Paul Henshaw; Tina D'Andrea; David Ting; Andrzej Sobiesiak (University of Windsor, Canada)
- SAE Document Number: 2003-32-0011
- Published: September 2003
- http://www.sae.org/technical/papers/2003-32-0011

ABSTRACT:
This research involved studying the effects of adding small amounts of hydrogen or hydrogen and oxygen to a gasoline-fueled spark ignition (SI) engine at part load. The hydrogen and oxygen were added in a ratio of 2:1, mimicking the addition of water electrolysis products. It was found that the effects of hydrogen addition (is equivalent to ≈2.8% of the fuel by mass, is equivalent to ≈60% by volume) decreased as the fuel/air equivalence ratio approached $\Phi = 1$. When operating at $\Phi \leq 0.8$, the torque, Indicated Mean Effective Pressure (IMEP) and NO emissions increased and cycle-to-cycle variation decreased with hydrogen addition. The improvements in engine performance and increase in NO emissions were related to a faster burn rate shown by a decrease in burn duration with the addition of hydrogen. Further, the addition of hydrogen only and hydrogen and oxygen in a ratio of 2:1 were compared. The extra oxygen had little effect on engine performance other than an increase in NO exhaust concentration ~500 ppm. Under the conditions tested, the power necessary to generate the hydrogen on board through electrolysis was greater than what was gained from the engine.

Document Title: Effects of Hydrogen Addition to SI Engine on Knock Behavior

- Authors: Tomohiro Shinagawa; Takeshi Okumura; Shigeo Furuno; Kyoung-Oh Kim (Toyota Motor Corporation, Japan)
- SAE Document Number: 2004-01-1851
- Published: June 2004
- http://www.sae.org/technical/papers/2004-01-1851

ABSTRACT:
In an SI [spark-ignited] engine, increasing the compression ratio could be one means of achieving higher thermal efficiency. However, when the compression ratio is increased, knock occurs and it prevents higher thermal efficiency. It is generally known that if the burning velocity is increased and the combustion period is shortened, the occurrence of knock may be suppressed. Here, hydrogen was added to the gasoline engine as a means of increasing the burning velocity. As a result, it has been confirmed that the occurrence of knock could be controlled to some extent, and knock could be completely avoided depending on the conditions for the distribution of hydrogen. Furthermore, it became clear that this result might have originated not only by the increase in the burning velocity but also by the hindrance of radical production by the hydrogen.

Document Title: A Critical Review of Experimental Research on Hydrogen Fueled SI Engines

- Authors: Sebastian Verhelst; Roger Sierens (Ghent University, Belgium) Stefaan Verstraeten (Karel de Grote-Hogeschool, Antwerpen, Belgium)
- SAE Document Number: 2006-01-0430
- Published: April 2006
- http://www.sae.org/technical/papers/2006-01-0430

ABSTRACT:
The literature on hydrogen-fueled internal combustion engines is surprisingly extensive and papers have been published continuously from the 1930s up to the present day. Ghent University has been working on hydrogen engines for more than a decade. A summary of the most important findings, resulting from a literature study and the experimental work at Ghent University, is given in the present paper, to clarify some contradictory claims and ultimately to provide a comprehensive overview of the design features in which a dedicated hydrogen engine differs from traditionally fueled engines.

Topics that are discussed include abnormal combustion (backfire, pre-ignition and knock), mixture formation techniques (carbureted, port injected, direct injection) and load control strategies (power output versus NO_x tradeoff). Attention is given to the most recent research by car manufacturers BMW and Ford, reporting hybrid control strategies (PFI+DI, lean burn + stoichiometric operation using EGR[90]) to obtain power outputs equivalent to gasoline engines with extremely low emission levels. Recent results from experiments with EGR on a hydrogen engine at Ghent University are also given. Finally, a synthesis of hydrogen engine design features is given, that makes the most of hydrogen's advantages and counter its disadvantages. Areas requiring further research are highlighted.

Document Title: Combustion Optimization in a Hydrogen-Enhanced Lean Burn SI Engine

- Authors: Joshua Arlen Goldwitz; John B. Heywood (MIT — Massachusetts Institute of Technology, USA)
- SAE Document Number: 2005-01-0251
- Published: April 2005
- http://www.sae.org/technical/papers/2005-01-0251

ABSTRACT:
As part of ongoing research on hydrogen-enhanced lean burn SI [spark-ignited] engines, this paper details an experimental combustion system optimization program. Experiments focused on three key areas: the ignition system, in-cylinder charge motion produced by changes in the inlet ports, and uniformity of fuel-air mixture preparation. Hydrogen enhancement is obtained with a H_2, CO, N_2 mixture produced by a fuel reformer such as the plasmatron. The ignition system tests compared a standard inductive coil scheme against high-energy discharge systems. Charge motion experiments focused on the impact of different flow and turbulence patterns generated within the cylinder by restrictor plates at the intake port entrance, as well as novel inlet flow modification cones.

---

[90] Exhaust Gas Recirculation

The in-cylinder fluid motion generated by each configuration was characterized using swirl and tumble flow benches. Mixture preparation tests compared a standard single-hole pintle[91] port fuel injector against a fine atomizing 12-hole injector. Results indicate that optimizations of the combustion system in conjunction with hydrogen-enhancement can extend the relative air/fuel ratio A at the lean limit of operation by roughly 25% compared against the baseline configuration. Nearly half of this improvement may be attributed to improvements in the combustion system.

Furthermore, hydrogen-enhancement produces a nearly constant lean misfire limit improvement of -0.20 — 0.25 A values, regardless of baseline combustion behavior. In contrast, the improvement of the amount of dilution with excess air at the point of peak engine efficiency decreases as engine operation becomes leaner, due to the inherently lengthening burn duration as λ increases.

Document Title: Advanced Emission and Fuel Economy Concept Using Combined Injection of Gasoline and Hydrogen in SI Engines

- Authors: Thorsten Allgeier; Martin Helmut Klenk; Tilo Landenfeld (Robert Bosch GmbH, Germany)
  Enrico Conte; Konstantinos Boulouchos (Swiss Federal Institute of Technology)
  Jan Czerwinski (HTI, Biel, Switzerland)
- SAE Document Number: 2004-01-1270
- Published: March 2004
- http://www.sae.org/technical/papers/2004-01-1270

ABSTRACT:
In order to meet future requirements for emission reduction and fuel economy a variety of concepts is available for gasoline engines. In the recent past new pathways have been found using alternative fuels and fuel combinations to establish cost-optimized solutions. The presented concept for an SI[92] engine consists of combined injection of gasoline and hydrogen. A hydrogen-enriched gas mixture is being injected additionally to gasoline into the engine manifold. The gas composition represents the output of an onboard gasoline reformer. The simulations and measurements show substantial benefits to improve the combustion process resulting in reduced cold-start and warm-up emissions and optimized part-load operation. The replacement of gasoline by hydrogen-rich gas during engine start leads to zero hydrocarbons in the exhaust gas. The mixed fuel operation enables high EGR rates up to 50% or extended lean-burn limits resulting in reduced pumping losses and increased effective engine efficiency. The set of measured data has been projected to the FTP driving cycle to allow a reasonable comparability to existing concepts with conventional exhaust gas after treatment. The compared data show promising results with a new system approach.

---

[91] Pin or bolt.

[92] Spark-ignited.

Document Title: *On-Board Hydrogen Generator* for a *Partial Hydrogen Injection* Internal Combustion Engine

- Authors: John Houseman; D. J. Cerini (California Institute of Technology, USA)
- SAE Document Number: 740600
- Published: February 1974
- http://www.sae.org/technical/papers/740600

ABSTRACT:
A compact onboard hydrogen generator has been developed for use with a hydrogen-enriched gasoline internal combustion engine. The unit uses gasoline and air in a partial oxidation reactor to produce a gaseous product containing hydrogen, carbon monoxide, minor amounts of methane, carbon dioxide and water, and nitrogen. A study of the theoretical equilibrium product composition has indicated an optimum operating point at an air/fuel ratio of 5.15, where a hydrogen/fuel mass ratio of 0.136 can be obtained under soot-free conditions. This is based on a gasoline with an atomic hydrogen to carbon ratio of 1.92. Both thermal and catalytic reactors have been tested. The thermal unit requires a reaction temperature of 2400º F to obtain 80% of the theoretical hydrogen yield. Soot formation tends to be a problem. The catalytic reactor yields close to theoretical yields at an operating temperature of 1800º F without any soot formation. A commercial nickel catalyst is used. A 100 h test with the catalytic unit showed no signs of performance degradation, using fully leaded Indolene 30. The calculated effect of hydrogen generator operating conditions on the fuel efficiency of a generator/engine combination is presented.

Document Title: Lean-Burn Characteristics of a Gasoline Engine Enriched With Hydrogen From a Plasmatron Fuel Reformer

- Authors: Edward J. Tully; John B. Heywood (MIT — Massachusetts Institute of Technology, USA)
- SAE Document Number: 2003-01-0630
- Published: March 2003
- http://www.sae.org/technical/papers/2003-01-0630

ABSTRACT:
When hydrogen is added to a gasoline-fueled spark ignition engine the lean limit of the engine can be extended. Lean-running engines are inherently more efficient and have the potential for significantly lower NOx emissions. In the engine concept examined here, supplemental hydrogen is generated on-board the vehicle by diverting a fraction of the gasoline to a plasmatron where a partial oxidation reaction is initiated with an electrical discharge, producing a plasmatron gas containing primarily hydrogen, carbon monoxide, and nitrogen.

Two different gas mixtures were used to simulate the plasmatron output. An ideal plasmatron gas (H_2 , CO, and N_2) was used to represent the output of the theoretically best plasmatron. A typical plasmatron gas (H_2, CO, N_2, and CO_2) was used to represent the current output of the plasmatron. A series of hydrogen addition experiments were also performed to quantify the impact of the non-hydrogen components in the plasmatron gas.

Various amounts of plasmatron gas were used, ranging from the equivalent of 10%-30% of the gasoline being reformed in the plasmatron.

All of the data was compared to a baseline case of the engine operating stoichiometrically on gasoline alone. It was found that the peak net indicated fuel conversion efficiency of the system was increased 12% over the baseline case. In addition, at this peak efficiency point the engine out NOx emissions decreased by 94% (165 ppm versus 2800 ppm) while the hydrocarbon emissions decreased by 6%.

In the data analysis, the relative air/fuel ratio was found to be an inadequate measure of mixture dilution. Two dilution parameters were defined and used. The Volumetric Dilution Parameter, VDP, represents the heating value per unit volume of the air/fuel mixture. Pumping work reductions due to mixture dilution correlate with VDP. The Thermal Dilution Parameter, TDP, represents the heating value per unit heat capacity of the air/fuel mixture. Combustion and emissions parameters correlate with TDP.

Document Title: Experimental Investigation of Hydrogen Fuel Injection in DI[93] Dual Fuel Diesel Engine

- Authors: N Saravanan; G. Nagarajan; C. Dhanasekaran; K. M. Kalaiselvan (College of Engineering, Guindy, Anna University, Chennai, India)
- SAE Document Number: 2007-01-1465
- Published: April 2007
- http://www.sae.org/technical/papers/2007-01-1465

ABSTRACT:
Hydrogen is expected to be one of the most important fuel in the near future to solve greenhouse problem and to save conventional fuels. In this study, a Direct Injection (DI) Diesel engine was tested for its performance and emissions in dual-fuel (Hydrogen/Diesel) mode operation. Hydrogen was injected into the intake port along with air, while Diesel was injected directly inside the cylinder. Hydrogen injection timing and injection duration were varied for a wider range with constant injection timing of 23° Before Injection Top Dead Centre (BITDC) for Diesel fuel.

When hydrogen is used as a fuel **along with Diesel,** emissions of Hydro Carbon (HC), Carbon monoxide (CO) and Oxides of Nitrogen (NOx) decrease without exhausting more amount of smoke. The maximum brake thermal efficiency obtained is about 30 % at full load for the optimized injection timing of 5° After Gas Exchange Top Dead Centre (AGTDC) and for an injection duration of 90° crank angle. The NO_X emission tends to reduce to a lower value of 888 parts per million (ppm) at full load condition for the optimized injection timing of 5° AGTDC and with an injection duration of 90° compared to neat Diesel fuel operation.

---

[93] DI: Direct Injection.

Document Title: Laboratory Experimental Evaluation of SI Engine Operation Supplemented By Hydrogen Rich Gas From a Compact Plasma Boosted Reformer

- Authors: Johney Boyd Green; Norberto Domingo; John M. Storey; Robert M. Wagner; Jeffrey S. Armfield (Oak Ridge National Laboratory, Tennessee, USA) Leslie Bromberg; D. R. Cohn; A. Rabinovich (MIT — Massachusetts Institute of Technology, USA)
- SAE Document Number: 2000-01-2206
- Published: June 2000
- http://www.sae.org/technical/papers/2000-01-2206

ABSTRACT:

It is well known that hydrogen addition to spark-ignited (SI) engines can reduce exhaust emissions and increase efficiency. Micro plasmatron fuel converters can be used for onboard generation of hydrogen-rich gas by partial oxidation of a wide range of fuels. These plasma-boosted microreformers are compact, rugged, and provide rapid response. With hydrogen supplement to the main fuel, SI engines can run very lean resulting in a large reduction in nitrogen oxides (NOx) emissions relative to stoichiometric combustion **without a catalytic converter.**

This paper presents experimental results from a microplasmatron fuel converter operating under variable oxygen to carbon ratios. Tests have also been carried out to evaluate the effect of the addition of a microplasmatron fuel converter generated gas in a 1995 2.3-L four- cylinder SI production engine. The tests were performed with and without hydrogen-rich gas produced by the plasma boosted fuel converter with gasoline. A one hundred fold reduction in NOx due to very lean operation was obtained under certain conditions. An advantage of onboard plasma- boosted generation of hydrogen-rich gas is that it is used only when required and can be readily turned on and off. Substantial NOx reduction should also be obtainable by heavy exhaust gas recirculation (EGR) facilitated by use of hydrogen-rich gas with stoichiometric operation.

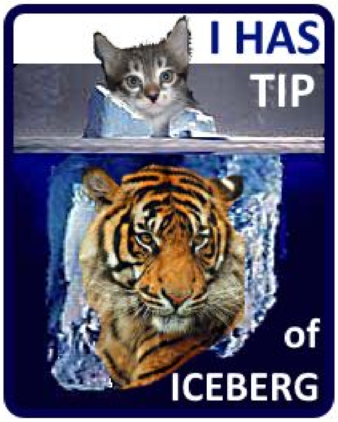

Other S.A.E. papers

The SAE website www.SAE.org offers thousands of documents for further study on the subject. In their search box you may type [hydrogen auto fuel] and similar key phrases.

NASA RESEARCH

DECLASSIFIED DOCUMENTATION

"Hydrogen Enrichment Concept – Preliminary Evaluation"

Author: E.E. Ecklund
NASA Center: Jet Propulsion Laboratory
Published: December 15, 1975
http://ntrs.nasa.gov/archive/nasa/casi.ntrs.nasa.gov/19770015346_1977015346.pdf

ABSTRACT:

A hydrogen-enriched fuels concept for automobiles is described and evaluated in terms of fuel consumption and engine exhaust emissions through multicylinder (V-8) automotive engine/hydrogen generator tests, single cylinder research engine (CFR) tests, and hydrogen-generator characterization tests. Analytical predictions are made of the fuel consumption and NOx emissions which would result from anticipated engine improvements. The hydrogen-gas generator, which was tested to quantify its thermodynamic input-output relationships was used for integrated testing of the V-8 engine and generator.

"Onboard Hydrogen Generation For Automobiles"

Authors: J. Houseman; D.J. Cerini,
NASA Center: Jet Propulsion Laboratory
Published: January 1, 1976
http://ntrs.nasa.gov/search.jsp?N=0&Ntk=all&Ntx=mode%20matchall&Ntt=Onboard%20hydrogen%20generation%20for%20automobiles

ABSTRACT: Problems concerning the use of hydrogen as a fuel for motor vehicles are related to the storage of the hydrogen onboard a vehicle. The feasibility is investigated to use an approach based on onboard hydrogen generation as a means to avoid these storage difficulties. Two major chemical processes can be used to produce hydrogen from liquid hydrocarbons and methanol. In steam reforming, the fuel reacts with water on a catalytic surface to produce a mixture of hydrogen and carbon monoxide. In partial oxidation, the fuel reacts with air, either on a catalytic surface or in a flame front, to yield a mixture of hydrogen and carbon monoxide. There are many trade-offs in onboard hydrogen generation, both in the choice of fuels as well as in the choice of a chemical process. Attention is given to these alternatives, the results of some experimental work in this area, and the combustion of various hydrogen-rich gases in an internal combustion engine.

"Emissions and Total Energy Consumption of a Multicylinder Piston Engine Running on Gasoline and a Hydrogen-Gasoline Mixture"

Author: J.F. Cassidy
NASA Center: Glenn Research Center
Published: May 1, 1977

http://ntrs.nasa.gov/archive/nasa/casi.ntrs.nasa.gov/19770016170_1977016170.pdf

ABSTRACT: A multicylinder reciprocating engine was used to extend the efficient lean operating range of gasoline by adding hydrogen. Both bottled hydrogen and hydrogen produced by a research methanol steam reformer were used. These results were compared with results for all gasoline. A high-compression-ratio, displacement production engine was used. Apparent flame speed was used to describe the differences in emissions and performance. Therefore, engine emissions and performance, including apparent flame speed and energy lost to the cooling system and the exhaust gas, were measured over a range of equivalence ratios for each fuel. All emission levels decreased at the leaner conditions. Adding hydrogen significantly increased flame speed over all equivalence ratios.

Document Title: Feasibility Demonstration of a Road Vehicle Fueled with Hydrogen-Enriched Gasoline

Authors: F.W. Hoehn; M.W. Dowdy
NASA Center: Jet Propulsion Laboratory
Published: January 1, 1974
http://ntrs.nasa.gov/search.jsp?N=0&Ntk=all&Ntx=mode%20matchall&Ntt=Feasibility%20demonstration%20of%20a%20road%20vehicle%20fueled%20with%20hydrogen-enriched%20gasoline

ABSTRACT: Evaluation of the concept of using hydrogen-enriched gasoline in a modified internal combustion engine in order to make possible the burning of ultralean mixtures. The use of such an engine in a road vehicle demonstrated that the addition of **small** quantities of gaseous hydrogen to gasoline resulted in **significant reductions** in exhaust emissions of carbon monoxide and nitrogen oxides as well as in thermal efficiency improvements of the engine performance.

“Reduction of Gaseous Pollutant Emissions from Gas Turbine Combustors Using Hydrogen-Enriched Jet Fuel”

Author: R.M. Clayton
NASA Center: Jet Propulsion Laboratory
Report Number: JPL-TM-33-790; NASA-CR-149146
Published: October 15, 1976
http://ntrs.nasa.gov/search.jsp?N=0&Ntk=all&Ntx=mode%20matchall&Ntt=Reduction%20of%20gaseous%20pollutant%20emissions%20from%20gas%20turbine%20combustors%20using%20hydrogen-enriched%20jet%20fuel

ABSTRACT: Recent progress in an evaluation of the applicability of the hydrogen enrichment concept to achieve ultralow gaseous pollutant emission from gas turbine combustion systems is described. The target emission indexes for the program are 1.0 for oxides of nitrogen and carbon monoxide, and 0.5 for unburned hydrocarbons. The basic concept utilizes premixed molecular hydrogen, conventional jet fuel, and air to depress the lean flammability limit of the mixed fuel. This is shown to permit very lean combustion with its low NOx production while simultaneously providing an increased flame stability margin with which to maintain low CO and HC emission. Experimental emission characteristics and selected analytical results are presented for a cylindrical research combustor designed for operation with inlet-air state conditions typical for a 30:1 compression ratio, high bypass ratio, turbofan commercial engine.

“Hydrogen Enrichment for Low-Emission Jet Combustion”

Author: R.M. Clayton
NASA Center: Jet Propulsion Laboratory
Published: January 1, 1978
http://ntrs.nasa.gov/search.jsp?N=0&Ntk=all&Ntx=mode%20matchall&Ntt=Hydrogen%20enrichment%20for%20low-emission%20jet%20combustion

ABSTRACT: Simultaneous gaseous pollutant emission indexes (g pollutant/kg fuel) for a research combustor with inlet air at 120,900 N/sq m (11.9 atm) pressure and 727 K (849 F) temperature are as low as 1.0 for NOx and CO and 0.5 for unburned HC. Emissions data are presented for hydrogen/jet fuel (JP-5) mixes and for jet fuel only for premixed equivalence ratios from lean blowout to 0.65. Minimized emissions were achieved at an equivalence ratio of 0.38 using 10-12 mass percent hydrogen in the total fuel to depress the lean blowout limit. They were not achievable with jet fuel alone because of the onset of lean blowout at an equivalence ratio too high to reduce the NOx emission sufficiently.

"Hydrogen — Primary or Supplementary Fuel for Automotive Engines"

Author: J.G. Finegold
NASA Center: Jet Propulsion Laboratory
Published: August 1, 1976

ABSTRACT: Hydrogen, gasoline, and mixtures thereof were compared as fuels for lean-burn engines. Hydrogen for the mixed fuels tests was generated by partial oxidation of gasoline. Hydrogen combustion yielded the highest thermal efficiency at any NOx level. Gasoline yielded the second highest thermal efficiency for NOx levels greater than or approximately equal to 2 gm/mi. For lower NOx levels and high vehicle inertia weights, progressively more hydrogen supplementation was the second most efficient system. For vehicle inertia weights below 5000 lbm (2300 kg), the statutory NOx standard (0.4 gm/mi) could be met with 1 lb/hr (0.13 g/s) hydrogen supplementation.

"Improving Performance and Reducing Pollution Emissions of a Carburetor Gasoline Engine by Adding HHO Gas into the Intake Manifold"

Authors: Tuan Le Anh; Khanh Nguyen Duc; Huong Tran Thi Thu; Tai Cao Van
Affiliated: Hanoi University Of Science and Technology; Hanoi University of Science and Technology; Nha Trang Vocational Training College
Published: March 25, 2013

ABSTRACT: ***Recently, using hydrogen or hydrogen-rich gas as a supplement fuel for spark ignition and compression ignition engines is one of the potential solutions for improving brake thermal efficiency, reducing fuel consumption and pollution emissions from internal combustion engines.*** This article investigates the effect of HHO gas addition on engine performance and emission characteristics.

HHO gas was produced by the electrolysis process of distilled water and stored in a high pressure tank before injected into the intake manifold. The experimental study was carried out on a 97 cc SI engine equipped with two injection systems (HHO gas and addition air) on the intake manifold. The tests were divided into two cases: hybrid HHO/gasoline and HHO/gasoline with addition air from second injection. The experiments showed that, of both cases, compared to original engine, the engine performance was improved and the gasoline fuel consumption was declined after enrichment of HHO gas and of HHO gas/addition air mixture. --- The study demonstrated that the effect of HHO gas addition is most apparent at light loads and lean conditions.

SCIENTIFIC, PEER-REVIEWED EVIDENCE OF WATERFUEL

“Effect of H_2/O_2 addition in increasing the thermal efficiency of a Diesel engine”

Authors: **S. Bari; M. Mohammad Esmaeil**
Sustainable Energy Centre, School of Advanced Manufacturing and Mechanical Engineering, University of South Australia, Mawson Lakes, SA 5095, Australia

Abstract

“Using hydrogen as an additive to enhance the conventional Diesel engine performance has been investigated by seven researchers and the outcomes are very promising. However, the problems associated with the production and storage of pure hydrogen currently limit the application of pure hydrogen in Diesel engine operation.

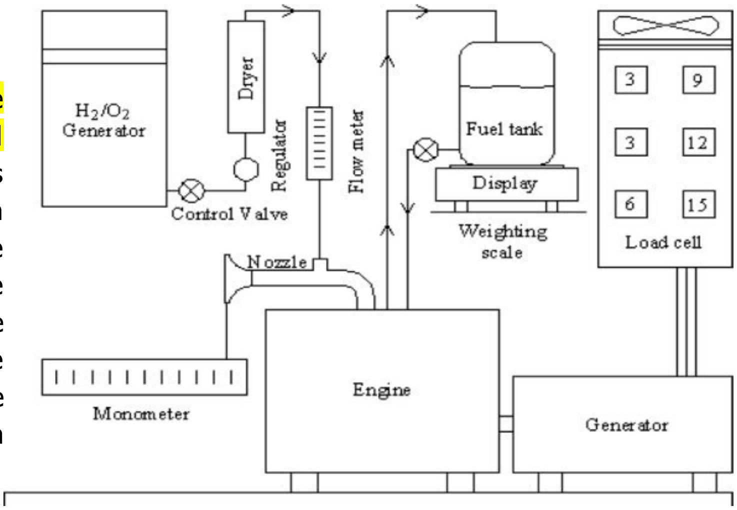

“On-board hydrogen–oxygen generator, which produces H_2/O_2 mixture through electrolysis of water, has significant potential to overcome these problems. This paper focuses on evaluating the performance enhancement of a conventional Diesel engine through the addition of H_2/O_2 mixture, generated through water electrolysis. The experimental works were carried out under constant speed with varying load and amount of H_2/O_2 mixture. Results show that by using 4.84%, 6.06%, and 6.12% total Diesel equivalent of H_2/O_2 mixture the brake thermal efficiency increased from 32.0% to 34.6%, 32.9% to 35.8% and 34.7% to 36.3% at 19 kW, 22 kW and 28 kW, respectively. These resulted in ***15.07%, 15.16% and 14.96% fuel savings***. The emissions of HC, CO_2 and CO decreased, whereas the NO_x emission increased[94].”

---

[94] Not a big problem – NOx can be reduced when adding water vapor to the mix.

IMPORTANT NOTE (by Ozzie) – in paragraph 3 'Results and Discussion,' Bari and Esmaeil bring up a vital point for the validation of POSITIVE ENERGY BALANCE: ***"In this experiment, the H2/O2 mixture was generated using 24 V external power supply and the power needed to produce the H2/O2 mixture is included in the input energy of the engine."***

Another noteworthy quote: ***"Compared to Diesel, hydrogen has wider flammability limits, higher flame speed and faster burning velocity which enable engines running on very lean mixtures."***

Read more: http://www.sciencedirect.com/science/article/pii/S0016236109003974

"EFFECTIVENESS OF OXYGEN ENRICHED HYDROGEN-HHO GAS ADDITION ON DI[95] DIESEL ENGINE PERFORMANCE, EMISSION AND COMBUSTION CHARACTERISTICS"

Authors: S.R. Premkartikkumar; K. Annamalai; A.R. Pradeepkumar
Department of Automobile Engineering, MIT Campus, Anna University, Chennai, India
Download: www.cynergi.eu/grk_files/Media/Allegati/HHO_5800cc_Diesel.pdf

Abstract

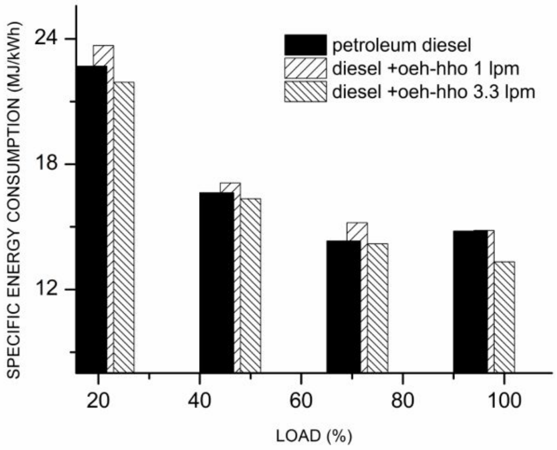

Nowadays, more researches focus on protecting the environment. Present investigation concern with the effectiveness of Oxygen Enriched hydrogen — HHO gas addition on performance, emission and combustion characteristics of a DI Diesel engine. Here the Oxygen Enriched hydrogen ***HHO gas was produced by the process of water electrolysis***. When potential difference is applied across the anode and cathode electrodes of the electrolyzer, water is transmuted into Oxygen Enriched hydrogen – HHO gas. The produced gas was aspirated into the cylinder along with intake air at the flow rates of 1 LPM[96] and 3.3 LPM. The results show that when Oxygen Enriched hydrogen-HHO gas was inducted, the brake ***thermal efficiency of the engine increased by 11.06%***, Carbon monoxide decreased by 15.38%, Unburned hydrocarbon decreased by 18.18%, Carbon dioxide increased by 6.06%, however, the NO_x emission increased by 11.19%. ---…smoke reduced substantially by 26.19%

---

[95] Direct Injection

[96] Liters Per Minute

IMPORTANT NOTE for Waterfuel experimenters – this experiment (see para.5 of the document) proves that the PROPER amount of HHO is needed for a given engine, otherwise you may get negative results. This is supported by other reports. (~Ozzie)

"Effect Of Addition Of Oxygen Enriched Hydrogen Gas Produces By Electrochemical Reaction In The Reduction Of Pollutants Coming Out From A DI[97] Diesel Engine"

Authors: S.R. Premkartikkumar, K. Annamalai, A.R. Pradeepkumar
Department of Automobile Engineering, MIT Campus, Anna University, Chennai, India

Abstract

The present investigation related with the enhancing of combustion phenomena of DI Diesel using Oxygen Enriched Hydrogen Gas. Here the Oxygen enriched hydrogen gas was produced by the process of electrochemical reaction – electrolysis. The produced gas was aspirated into the combustion process of mineral Diesel along with intake air, at the flow rate of 4.6 LPM.

The results show that the fuel consumption gets decreased and simultaneously, engine-out pollutants come down by the addition of Oxygen enriched hydrogen gas ***with warm Diesel fuel induction***. When, the Diesel fuel temperature was increased from 25ºC to 35ºC, ***total fuel consumption of the test engine decreased by 15.76%, unburned hydrocarbon emission decreased by 25.76%, smoke emission decreased by 33.33%***

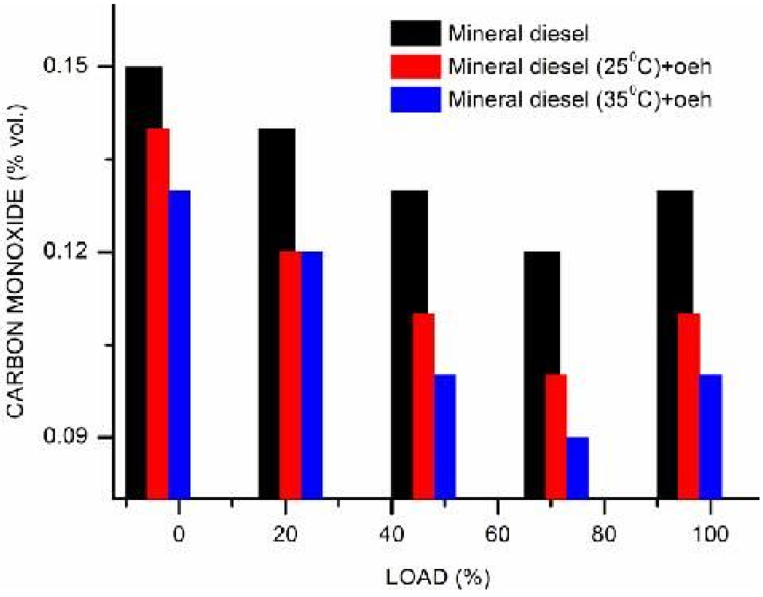

---

[97] Direct Injection

"Onboard Generation of Hydrogen-Rich Gaseous Fuels — A Review"

Authors: Y. Jamal; M.L. Wyszynski
School of Manufacturing and Mechanical Engineering
University of Birmingham, Birmingham B15 2TT, UK
Published: September 1993
International Journal of Hydrogen Energy — Vol.19, №7, pp. 557-572, 1994
Downloads:

- http://www.sciencedirect.com/science/article/pii/0360319994902135
- http://empirehydrogen.com/docs/Jamal-Wyszynski.pdf

ABSTRACT:

Hydrogen has a good potential as an alternative fuel for spark ignition engines. It can extend the lean flammability limit of conventional fuels in order to achieve higher thermal efficiency and lower exhaust emissions. This paper reviews the use of hydrogen and hydrogen-enriched gasoline as a fuel for SI [spark-ignited] engines and the techniques used to generate hydrogen from liquid fuels such as gasoline and methanol, on-board the vehicle. The processes of thermal decomposition, steam reforming, partial oxidation and exhaust gas reforming are evaluated. A considerable amount of both theoretical and experimental work has been done in this field. Predictive and experimental results of the various investigators are reviewed and summarized.

Some of the conclusions[98] drawn by Jamal and Wyszynski:

> 3. ***Hydrogen supplementation of gasoline combustion has been shown to yield reduction in fuel consumption.***
>
> 4. ***Hydrogen-rich gaseous fuels can be burned under ultra lean conditions to yield very low NOx emissions without running into lean flammability limit problems.***
>
> 5. ***The lean burning conditions give possibilities for very low CO emissions.***
>
> 8. ***Onboard hydrogen generation from liquid fuels, either hydrocarbons or alcohols, is technically feasible.***
>
> 10. ***Some of the waste heat from the vehicle exhaust gas can be reclaimed by converting it to chemical energy in the fuel.***

---

[98] Note that if it was deemed 'feasible' back in 1993, with today's technologies it may be even better and easier.

“Cleaning up Diesel and Automotive Exhaust with Hydrogen”

Author: **W. Thor Zollinger — Senior Mechanical Engineer**,
Alternative Fuels Group, Idaho National Engineering & Environmental Laboratory

“Addition of hydrogen to the air intake of a combustion engine can dramatically cut the pollutants in the engine’s exhaust. Reductions up to 50% have been observed in studies, some dating back into the 1950’s. Hydrogen burns more fiercely, propagating the flame front faster, increasing the efficiency of combustion, and burning the fuel more completely.”

“In the Hydrogen Generator, distilled water is converted by electrolysis into hydrogen and oxygen gas, which is then pulled into the engine through the air intake. This uses some of the engine’s power, but the return from increased efficiency in a lot of cases is more than the cost of the electricity. Fuel efficiency can increase, as stated in both customer letters and formal test results. The main benefit, however, is a reduction in exhaust emissions, which is fast becoming more important to independent truckers. Several states, California and New Jersey for example, are heavily fining truckers for smoky exhaust, making a device like this invaluable.”

Thank you Mr. Zollinger — I couldn’t have said it better! (~Ozzie)

“Emissions Reduction Through Hydrogen Enrichment”

Authors: Jean J. Botti; M. James Grieve; Carlton E. Speck
Delphi Corporation, USA *[Delphi is the leading supplier of Detroit products to the world]*

ABSTRACT:

Hydrogen has unique properties in dilute combustion and catalytic reactions compared to other fuels. While the long-term vision for production and use of renewable hydrogen in transportation is theoretically attractive, significant economic and technical barriers remain in all areas. This paper will focus on two technologies which Delphi is developing to allow hydrogen to be produced and used on-board vehicles to capture the efficiency and emission control benefits of hydrogen in the short to mid-term. These technologies are: On-board reforming for emission control with internal combustion engines (ICE) Solid Oxide Fuel Cell (SOFC) for auxiliary power, heat and hydrogen generation.

"Investigation of the Effects of Hydrogen Addition on Performance and Exhaust Emissions of Diesel Engine"

Authors: Mihaylov Milen; Barzev Kiril (University of Rousse, Bulgaria)

Published: 11/02/2004, Society of Automotive Engineers in Bulgaria, Rousse, Bulgaria

ABSTRACT:

Experiments were carried out to evaluate the influence of the addition of hydrogen oxygen mixture (obtained from electrochemically decomposed water) to the inlet air of a single cylinder direct injection Diesel engine. Addition of hydrogen to the intake or delivery into the cylinder of Diesel engine can improve combustion process due to superior combustion characteristics of hydrogen in comparison to conventional **Diesel** fuels. Presented paper describes the dynamometer test results of a study where a small amount of hydrogen-oxygen mixture, produced by hydrogen-oxygen generator is added to the intake of a Diesel engine.

"Application of Hydrogen Assisted Lean Operation to Natural Gas-Fueled Reciprocating Engines (HALO) Final Scientific/Technical Report"

Author: Chad Smutzer
TIAX LLC, 15 Acorn Park, Cambridge, Massachusetts 02140
Published: January 2006
Cooperative Agreement № DE-FC26-04NT42235

ABSTRACT: Two key challenges facing Natural Gas Engines used for cogeneration purposes are spark plug life and high NOx emissions. Using Hydrogen Assisted Lean Operation (HALO), these two keys issues are simultaneously addressed. HALO operation, as demonstrated in this project, allows stable engine operation to be achieved at ultra-lean (relative air/fuel ratios of 2) conditions, which virtually eliminates NOx production. NOx values of 10 ppm (0.07 g/bhp-hr NO) for 8% (LHV H2/LHV CH4) supplementation at an exhaust O2 level of 10% were demonstrated, which is a 98% NOx emissions reduction compared to the leanest unsupplemented operating condition. Spark ignition energy reduction (which will increase ignition system life) was carried out at an oxygen level of 9 %, leading to a NOx emission level of 28ppm (0.13 g/bhp-hr NO). The spark ignition energy reduction testing found that spark energy could be reduced 22% (from 151 mJ supplied to the coil) with 13% (LHV H2/LHV CH4) hydrogen supplementation, and even further reduced 27% with 17% hydrogen supplementation, with no reportable effect on NOx emissions for these conditions and with stable engine torque output. Another important result is that the combustion duration was shown to be only a function of hydrogen supplementation, not a function of ignition energy (until the ignitability limit was reached). The next logical step leading from these promising results is to see how much the spark energy reduction translates into increase in spark plug life, which may be accomplished by durability testing.

"Hydrogen as an Auxiliary Fuel in Compression-Ignition Engines"

Authors: Harold C. Gerrish; Hampton H. Foster
Langley Memorial Aeronautical Laboratory, National Advisory Committee For Aeronautics, Langley Field

Published: April 15, 1935

ABSTRACT: An investigation was made to determine whether a sufficient amount of hydrogen could be efficiently burned in a compression-ignition engine to compensate for the increase of lift of an airship due to the consumption of the fuel oil. The performance of a single-cylinder four-stroke-cycle compression-ignition engine operating on fuel oil alone was compared with its performance when various quantities of hydrogen were inducted with the inlet air. Engine performance data, indicator cards, and exhaust gas samples were obtained for each change in engine operating conditions.

"Module 3: Hydrogen Use in Internal Combustion Engines"

- Authors: College of the Desert and SunLine Transit Agency, with funding from the U.S. Federal Transit Administration
- From the course "Hydrogen Fuel Cell Engines and Related Technologies" (Dec.2001) produced for U.S. Department of Energy — *Energy Efficiency and Renewable Energy; Hydrogen, Fuel Cells and Infrastructure Technologies Program*
- Download: www1.eere.energy.gov/hydrogenandfuelcells/tech_validation/pdfs/fcm03r0.pdf

ABSTRACT: This course manual features technical information on the use of hydrogen as a transportation fuel. It covers hydrogen properties, use, and safety as well as fuel cell technologies, systems, engine design, safety, and maintenance. It also presents the different types of fuel cells and hybrid electric vehicles. Based on Phase 3 and 4 Ballard fuel cell buses, the system descriptions and maintenance procedures focus on proton-exchange-membrane (PEM) fuel cells for heavy-duty transit applications. The PEM fuel cell engine is the most promising for automotive applications; its transit application is the most advanced.

QUOTE: "Onboard electrolyzers are used with hydrogen injection systems for Diesel engines. In this case, **only a small amount of hydrogen and oxygen are produced to supplement, not replace, the Diesel fuel used in the engine**. The electricity to operate the electrolyzer is typically supplied by the engine's alternator or 12/24-VDC electrical system."

"Driving Characteristics of a Motorcycle Fueled with Hydrogen-Rich Gas Produced by an Onboard Plasma Reformer"

Authors: Horng Rong-Fanga [hong.rf@msa.hinet.net]; Wen Chih-Shenga; Liauh Chihng-Tsunga; Chao Yub; Huang Ching-Tsuenc
Department of Mechanical Engineering, Kun Shan University,
№ 949, Da-Wan Road, Yang-Kung City, Taiwan County, Taiwan 710, Taiwan
Institute of Nuclear Energy Research, Atomic Energy Council, Taiwan
Fuel Cycle and Materials Administration, Atomic Energy Council, Taiwan

Published: 2008

ABSTRACT: The driving performance and emission characteristics of a 125 cc motorcycle equipped with an onboard plasma reformer for producing hydrogen-rich gas were investigated. Butane with suitable air flow rate was induced into the plasma reformer to produce hydrogen-rich gas, which was used as supplementary fuel for the internal combustion engine. The motorcycle was run under steady and transient conditions on a chassis dynamometer to assess the driving performance and exhaust emissions.

Prior to the driving, the operation parameters of the plasma reformer were optimized in a series of tests and the results were an O2/C ratio of 0.55 and a butane supply rate of 1.16 L/min. It was shown that under a constant speed of 40 km/h, with the CO and HC emissions similar to that of the original engine, the NOx emission was found to be improved by 56.8%. During transient driving condition, the improvement of 16%–41% in NOx concentration was achieved by adding hydrogen-rich gas. The emissions of the motorcycle were also analyzed on a chassis dynamometer tracing an ECE-40 driving pattern. The NOx emission was improved by 34% as was the HC emission by 4.08%, although the CO emission was increased. Simultaneously, the acceleration characteristics of the vehicle were tested, and were similar under both fuelling systems.

"Effect of Hydrogen Enriched Hydrocarbon Combustion on Emissions and Performance"

Author: Jacob Wall — Department of Biological and Agricultural Engineering, University of Idaho

ABSTRACT: The principle of this mode of combustion is to add a percentage of hydrogen gas to the combustion reactions of either compression or spark ignition engines. The addition of hydrogen has been shown to decrease the formation of NOx, CO and unburned hydrocarbons. Studies have shown that added hydrogen in percentages as low as 5-10% percent of the hydrocarbon fuel can reduce that hydrocarbon fuel consumption. The theory behind this concept is that the addition of hydrogen can extend the lean operation limit, improve the lean burn ability, and decrease burn duration. To apply this method to an engine a source of hydrogen is needed. At this time the simplest option would be to carry a tank of hydrogen. Research is being conducted to allow the hydrogen to be reformed from

the vehicles hydrocarbon fuel supply or produce hydrogen from electrolysis of water. In the future, better methods could be developed for storing hydrogen in the vehicle or production of hydrogen on-board the vehicle.

“Investigation of Turbulent Combustion in SI-Homogeneous Charge Engines Using Hydrogen-Gasoline Mixtures”

Authors: Enrico Conte; Konstantinos Boulouchos
Institut für Energietechnik, Laboratorium für Aerothermochemie und Verbrennungssysteme[99]

ABSTRACT: Hydrogen appears to be one of the most promising long-term alternative fuels. Its major combustion product is water, it is easily ignited, and it has wide flammability limits. Nevertheless, some important issues arise, such as on-board storage, safety concern, pre-ignition and back-flash, combustion control, emission of NOx, power density for transport applications and some more, not infrastructure for distribution. In the mid-term time frame, the addition of small quantities of hydrogen to gasoline appears to be a good opportunity to combine the major advantages given by both fuels, avoiding many problems, especially if an hydrogen-rich gas is produced on-board directly from gasoline by means of a reformer.

Addition of hydrogen-rich gas to gasoline has recently gained interest in the industrial and academic community in terms of the anticipated potential of these fuel mixtures to improve part-load efficiency and cold start pollutant emissions in internal combustion engines. Of particular relevance in this context is the dependence of unsteady turbulent flame propagation speed, EGR tolerance, lean limit extension, NOx formation and wall quenching distance on varying percentage content of H_2 in the fuel mixture.

“Hydrogen Enrichment for Improved Lean Flame Stability”

Author: R. W. Schefer, Combustion Research Facility, Sandia National Laboratories, Livermore, CA 94551-0969, USA. Email: rwsche@sandia.gov
Published: International Journal of Hydrogen Energy, Volume 28 (2003), pp. 1131-1141

ABSTRACT: The stability characteristics of a premixed, swirl-stabilized flame were studied to determine the effects of hydrogen addition on flame stability under fuel-lean conditions. The burner configuration consisted of a centerbody with an annular, premixed methane/air jet introduced through five, 45° swirl vanes. Flame stability was studied over a range of operating conditions.

---

[99] Translation (from German): The Aerothermochemistry and Combustion Systems Laboratory. It is part of the Department of Mechanical and Process Engineering at ETH (Swiss Federal Institute of Technology) in Zürich, Switzerland. Headed by Professor Konstantinos Boulouchos.

Under fuel-rich conditions the flame was lifted from the burner surface due to the mixing with entrained ambient air that was needed to form a flammable mixture. As the fuel/air mixture ratio was decreased toward stoichiometric, the resulting increase in flame speed allowed the flame to propagate upstream through the low-velocity wake region and attach to the centerbody face. The maximum blowout velocity occurred at stoichiometric conditions, and decreased as the mixture became leaner. OH PLIF measurements were used to study the behavior of OH mole fraction as the lean stability limit was approached. Near the lean stability limit the overall OH mole fraction decreased, the flame decreased in size and the high OH region took on a more shredded appearance.

The addition of up to 20% hydrogen to the methane/air mixture resulted in a significant increase in the OH concentration and ***extended the lean stability limits of the burner.***

"Hydrogen Enrichment Via Chemical Recuperation to Increase Efficiency and Reduce Emissions in Engines"

Author: David Vernon — Hydrogen Production & Utilization Laboratory
University of California, Davis

ABSTRACT: Fundamental chemistry investigations of the effect of hydrogen enrichment on flame characteristics and internal combustion processes have shown that hydrogen enrichment can greatly extend the lean limit and dilution limit of many different fuel mixtures. This extension of the lean and dilution limits enables advanced combustion regimes with low combustion temperatures.

"Low NOx Operation and Recuperation of Thermal and Chemical Energy Through Hydrogen In Internal Combustion Engines"

Authors: Dr. Paul A. Erickson, Director, Hydrogen Production and Utilization Laboratory, Assistant Professor, Mechanical and Aeronautical Engineering Department, University of California, Davis; David Vernon; Eddie Jordan; Dr. Kirk Collier; Neal Mulligan
Published: 2005 — 16th Annual Hydrogen Conference of the National Hydrogen Association (NHA), Washington, D.C.

ABSTRACT: Potential benefits of hydrogen enriched combustion are lower lean limit, flame stability, potential for low temperature combustion (with high amounts of Exhaust Gas Recirculation [EGR] or air dilution), potential for simultaneous emissions reductions (NOx and Hydrocarbons) and efficiency increases due to lower losses from lower temperatures.

“Effect of regulated harmful matters from a heavy-duty Diesel engine by H_2/O_2 addition to the combustion chamber”

Authors:

- Hsin-Kai Wang, Chia-Yu Cheng, Kang-Shin Chen, and Yuan-Chung Lin, of the Institute of Environmental Engineering, National Sun Yat-Sen University, Kaohsiung, TAIWAN
- Chung-Bang Chen, of Heavy Duty Diesel Engine Emission Group, Refining and Manufacturing Research Center, CPC Corporation, TAIWAN

Published: 2011

ABSTRACT: This work investigated the effects of induction of hydrogen and oxygen mixture (H_2/O_2) to a heavy-duty Diesel engine (HDDE) on the thermal performance, fuel consumption and emission characteristics. The HDDE was tested at one low load steady-state condition, 24.5% of the max load (40 km/h), using neat Diesel and seven H_2/O_2 mixtures: 10–70 L/min, interval 10 L/min. The results show that brake thermal efficiency is increased from 31.1% for neat Diesel to 39.9% for 70 L/min of H_2/O_2 mixture. For 10–40 L/min of H_2/O_2 mixture addition, the Brake Specific Fuel Consumption (BSFC) was higher than that of neat Diesel. However, for 50, 60 and 70 L/min of H_2/O_2 mixture addition, the BSFC was lower than that of neat Diesel by about 3.2%, 9.9% and 10.5%, respectively. Due to improved combustion efficiency, the emission concentrations of hydrocarbon, carbon dioxide and carbon monoxide were all lowered, while those of the nitrogen oxides were increased.

“Effectiveness of Oxygen Enriched Hydrogen-HHO Gas Addition On DI Diesel Engine Performance, Emission and Combustion Characteristics”

Authors: SR. Premkartikkumar, K. Annamalai, A.R. Pradeepkumar
Department of Automobile Engineering, MIT Campus, Anna University, Chennai, India

Published: 2013

ABSTRACT: The present investigation related with the enhancing of combustion phenomena of DI Diesel using Oxygen Enriched Hydrogen Gas. Here the Oxygen enriched hydrogen gas was produced by the process of electrochemical reaction –electrolysis. The produced gas was aspirated into the combustion process of mineral Diesel along with intake air, at the flow rate of 4.6 LPM. The results show that the fuel consumption gets decreased and simultaneously, engine-out pollutants come down by the addition of Oxygen enriched hydrogen gas with warm Diesel fuel induction. When the Diesel fuel temperature was increased from 25°C, total fuel consumption of the test engine decreased by 15.76%, unburned hydrocarbon emission decreased by 25.76%, smoke emission decreased by 33.33% and the NO_x emission increased by 19.52%.

--- Most of these researches concentrate on using pure hydrogen as a dual fuel, which requires heavier and bigger storage tanks. ***One of the reliable solutions to this problem is to produce hydrogen on-board and use it immediately.*** Only process, which fulfills the on-board production of hydrogen is water electrolysis process. Water electrolysis is one of the most important industrial processes for hydrogen production today, and is expected to become even more important in the future.

The same three scientists submitted a similar work with similar results, titled "Effect Of Addition Of Oxygen Enriched Hydrogen Gas Produces By Electrochemical Reaction in the Reduction of Pollutants Coming out from a DI Diesel Engine" (date unknown). Anna University, Chennai, India. The engine setup was somewhat different, the main difference being that in the work mentioned above they had a FUEL HEATER installed between the fuel tank and the Diesel engine. →

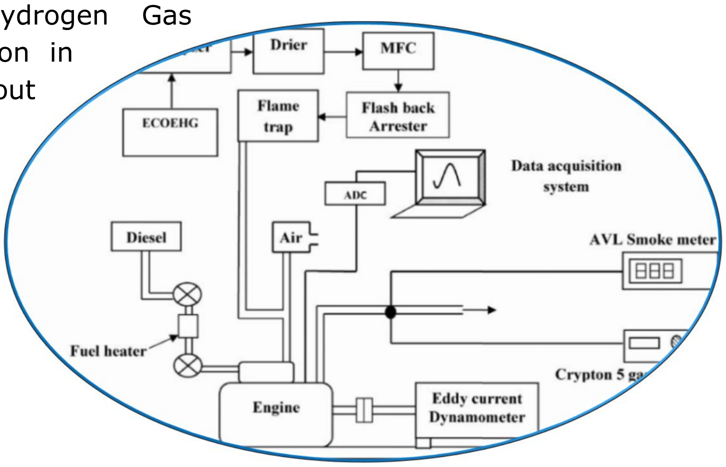

"Prospects and Perspective of Hydrogen Utilization in Compression Ignition Engines [Diesels] – a Review"

Authors: P.S. Ranjit, Mukesh Saxena
University of Petroleum & Energy Studies (UPES), Dehradun

Published: 2013

SUMMARY: The researchers studied many prior scientific researches into the use of hydrogen and HHO on saving fuel and reducing pollution, and have eventually arrived at the following conclusions (quote):

1. A wide variety of engines varying from 5kW to 265 kW, single cylinder to multi cylinder, fueling from conventional Diesel to different alternative fuels like SVO[100], DEE[101], RSO[102], RSOME[103] and Natural Gas (NG) etc. using different fuel induction techniques; carburetion system to High Pressure Direct Injection system have been studied. The results are promising to represent hydrogen as good alternative fuel as sole and supplemented fuel.

---

[100] SVO: Straight (undiluted, untreated) Veggie Oil.

[101] DEE: Diethyl Ether.

[102] RSO: Rubber Seed Oil.

[103] RSOME: Rubber Seed Oil Methyl Ester.

2. Hydrogen as sole fuel utilization would requires major modifications starting from engine material compatibility to utilization of hydrogen, its safety and economical aspects.

3. In supplemented mode hydrogen gives **better substitution in transition phase** (short term perspective) to switch over to the sole hydrocarbon engines. The supplemented hydrogen engines would require minor hardware modifications.

4. The supplementation by hydrogen in a given engine using conventional and alternative fuels, increases efficiency. This is directly related to injection strategy of hydrogen fuel in the engine either by direct injection in the combustion chamber or the port injection in the inlet manifold. Hence, it is very essential to understand the increase in efficiency with respect to injection strategy, varying load and speed and for the considered fuel along with its properties.

5. Hydrogen supplemented CI engine operating on the conventional or alternative fuels would require an approach to be developed considering optimization of heat release with optimal proportion of hydrogen to supplement the conventional and/or alternative fuelled CI engines to enhance their performance and emissions.

"Arc-liberated chemical energy exceeds electrical input energy"

Authors: Peter Graneau, Neal Graneau, George Hathaway, Richard Hull

ABSTRACT: This paper reports the first experimental results in which the kinetic energy of cold fog, generated in a water arc plasma, exceeds the electrical energy supplied to form and maintain the arc. The cold fog explosion is produced by breaking down a small quantity of liquid water and passing a kiloampere current pulse through the plasma. The 90-year history of unusually strong water arc explosions is reviewed. Experimental observations leave little doubt that internal water energy is being liberated by the sudden electrodynamic conversion of about one-third of the water to dense fog. High-speed photography reveals that the fog expels itself from the water at supersonic velocities. The loss of intermolecular bond energy in the conversion from liquid to fog must be the source of the explosion energy.

Downloads:

- http://journals.cambridge.org/action/displayAbstract?fromPage=online&aid=18687
- http://pondscienceinstitute.on-rev.com/pdffiles/Arc-liberated%20chemical%20energy.pdf

Other Scientists on Hydrogen-Enhanced Combustion

"Dr. Hydrogen" Roy McAlister, P.E.[104], President of the American Hydrogen Association

In his US Patent number 5,394,852, from March 7, 1995, McAlister offered a "Method and apparatus for improved combustion engine." McAlister described his invention:

> ***"A process for operating a combustion engine which comprises the steps of thermoelectrochemically regenerating waste heat rejected by the combustion engine by adding waste heat to an electrolysis cell, generating hydrogen by an amount of electricity that is reduced as a result of additions of waste heat and using the hydrogen as a stratified-charge combustant within each combustion chamber of the engine."***

Roy McAlister is the President of the American Hydrogen Association (a non-profit organization from Arizona, USA, www.Clean-Air.org, www.goH2.org) and member of the Advisory Board in the International Association for Hydrogen Energy www.IAHE.org

McAlister, who has built a hydrogen car when he was 17, is one of the most noteworthy promoters of hydrogen as a solution to our energy problems. From his website: "All fuels need air (oxygen) for combustion. Hydrogen is the only common fuel that is not chemically bound to carbon; therefore when hydrogen burns in air it produces only heat energy, water and possibly trace amounts of oxides of nitrogen. Water and oxides of nitrogen produced by thunderstorms are natural in our atmosphere."

> ***"Introducing hydrogen (2%-20%) into internal combustion engines,*** *that are currently using fossil fuels like gasoline, Diesel, or natural gas,* ***increases the efficiency of combustion, improves mileage and reduces pollutants to a remarkable degree."***

---

[104] Professional Engineer; see http://www.nspe.org/resources/licensure/what-pe

F.W. Hoehn and M.W. Dowdy, of the Jet Propulsion Laboratory (JPL), California Institute of Technology

Hoehn and Dowdy of JPL presented a report titled "Feasibility Demonstration of a Road Vehicle Fueled with Hydrogen Enriched Gasoline" at the 9th Intersociety Energy Conversion Engineering Conference (held August 26-30, 1974 in San Francisco).

This research utilized onboard storage tanks to provide SUPPLEMENTAL HYDROGEN for combustion enhancement, and was published by the Society of Automotive Engineers as SAE Paper 749105. *[Source: the 1993 research by Jamal & Wyszynski, University of Birmingham, provided at the beginning of this chapter].*

Georgios Pechlivanoglou, University of Oldenburg, Germany

An extensive research titled ***"Hydrogen Enhanced Combustion"*** was performed at the University of Oldenburg between 2005-2007. The extensive analysis was supported with many diagrams and combustion charts; the timed snapshots of hydrogen assisted combustion shown below are only a sample out of the wealth of information in this 35-page report:

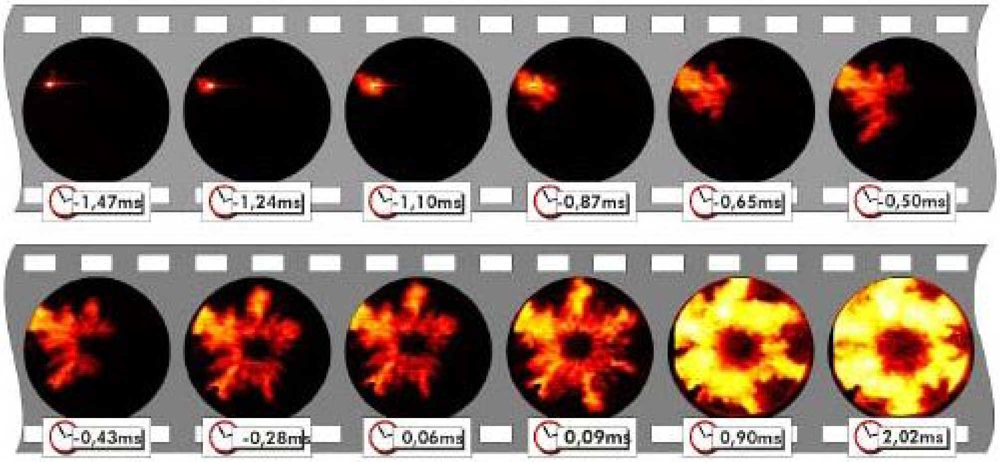

S.I. Engine – Hydrogen jet combustion

In the final report Pechlivanoglou says:

> ***Nascent [atomic] hydrogen is very active and produces a rapid chain reaction that spreads almost instantly to the whole combustion chamber volume. The almost simultaneous ignition of hydrogen initiates the simultaneous ignition of the main fuel, which is burned instantly without creating any flame front since the whole combustion chamber is being ignited at the same time. This rapid combustion phenomenon results to:***

a) Complete combustion of the whole chamber's volume without un-ignited areas.

b) Development of very high pressures at the combustion chamber due to the high temperatures and due to the fact that the combustion chamber volume is not significantly increased (the piston moves less than 20°). This leads to increased piston forces and increased engine torque (around 30% increase).

c) Ability to combust effectively extra-lean air-fuel mixture, which would not ignite under the conventional combustion engines. This leads to higher efficiency and increased fuel economy (around 25-30%).

d) Reduce (or even eliminated) CO and unburned HC emissions due to almost perfect combustion.

e) Reduction of NOx emissions, due to a complex mechanism of combustion mechanics, which was just recently understood...

From the description above it becomes obvious to the reader that Hydrogen Enhanced Combustion poses significant advantages over the conventional combustion and it is considered to be one of the most promising techniques for the "clean" internal combustion engines of the near future.

Between the engine manufacturers was generally approved that the increased combustion temperatures and the minimal duration of the combustion process were causing the formation and emission of Nitric Oxide pollutants. This was especially evident at the Diesel cycle engines where the compression and supercharging pressure increase was followed by a proportional increase of the NOx emissions.

As a result of the above, the engine manufacturers have to compromise between performance and emissions, so they produce engines that cannot operate at the maximum temperature – pressure conditions while in the same time they have to utilize exhaust catalytic oxidation devices in order to achieve fully oxidized emissions.

However both researchers and manufactures consider the present status as the threshold of the present engine design and they try to introduce less conventional methods in the design and manufacturing process in order to by-pass the emissions' barrier. This is the first step for this new era of engine design in the Hydrogen Enhanced Combustion, which promises multiple improvements in power production, efficiency and emissions.

"Investigation of The Effects of Hydrogen Addition on Performance and Exhaust Emissions of Diesel Engine"

- Authors: Milen Mihaylov & Kiril Barzev
- Society of Automotive Engineers in Bulgaria; University of Rousse, Bulgaria
- Presented at: FISITA World Automotive Congress (2004), Barcelona, Spain
- Link: www.academia.edu/1643203/INVESTIGATION_OF_THE_EFFECTS_OF_HYDROGEN_ADDITION_ON_PERFORMANCE_AND_EXHAUST_EMISSIONS_OF_DIESEL_ENGINE

Mihaylov and Barzev's report was based on their actual tests – adding freshly-made HHO to a single-cylinder Diesel engine connected to a host of dynamometer equipment – proved what HHO enthusiasts have known for years:

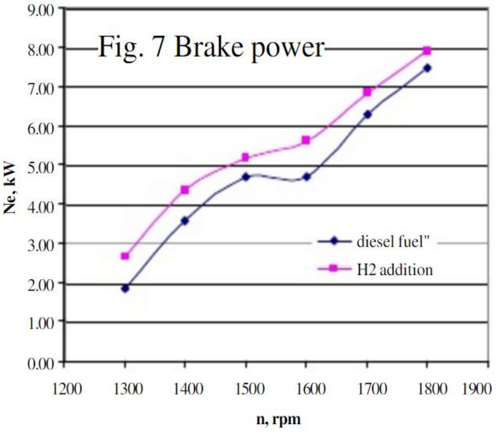
Fig. 7 Brake power

*"The **averaged power improvement** obtained as a result of the experimental investigation **is 15%** ←(Fig.7). --- These facts show that the power improvement comes not only from the energy added as a result of hydrogen addition. **The greater part of power increase** is due to combustion process improvement by the means of combustion duration reduction **because of superior combustion and flame propagation properties of hydrogen.** The proofs of this statement are the curves of net heat release and net heat release rate shown respectively on (Fig.4) and (Fig.3)."*

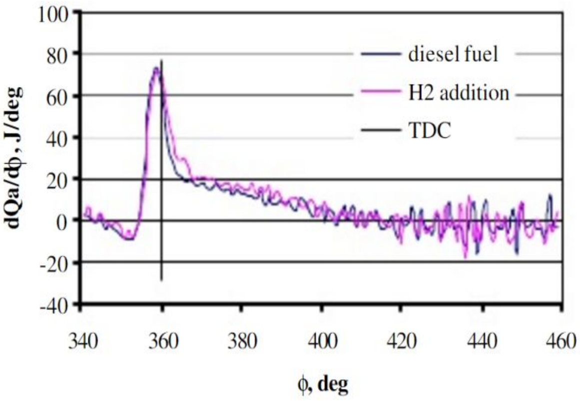

Fig. 3 Net heat release rate

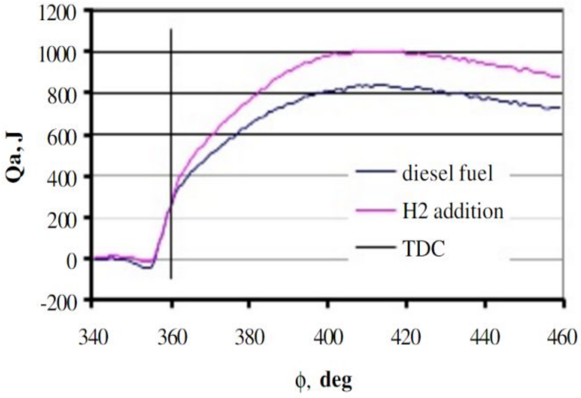

Fig. 4 Net heat release

Chapter 14.

PROOF: George Wiseman — Brown's Gas Works and Works Well

WORLD EXPERT #1

Who is George Wiseman?

George Wiseman is a world-renowned inventor, writer and consultant. He is a ***certified automotive technician***. He has been researching alternative, sustainable energy technologies and high mileage techniques since 1974 and on-board electrolysis since the late 1980's. Most of the current Water as Fuel grassroots movement can be traced back to his groundbreaking research and books.

He develops the technologies for his own use and then, **instead of patenting**, writes up complete instructions to help anyone apply the innovations in their own life. He's been doing this successfully since 1984 when he started Eagle-Research.

Quite a few people have made very profitable businesses after buying his books. Most don't give him credit… like the fellow building this version of his HyZor.

Copying (without acknowledgement) is supposed to be the sincerest form of flattery but it's not honest, says Wiseman. These do credit him: www.ebay.com/usr/klondikedarol and www.fuelsaver-mpg.com/tuning-for-mileage

The recognition is appreciated, except for the sale of a book or kit, it's all he gets from those businesses ☺.

All of Wiseman's fuel saving technologies **have stood the test of time**, **Vested Interest suppression** (*story told elsewhere*) **and customer satisfaction** (*less than 1% return rate and lots of sales from referrals*).

He was the first (by 10 years) to realize the need for ***C**ombustion **E**nhancement **I**nterface **T**echnology* (**CEIT**). He developed the first practical CEIT, like the Carburetor Enhancer, and the EFIE (now a standard in the fuel-saving industry).

He has developed the world's most efficient and practical commercial Brown's Gas electrolyzers (WaterTorches) and has sold hundreds of them worldwide.

ER1200 WaterTorch independent efficiency test results:
http://www.eagle-research.com/cms/node/620
(without measuring heat energy produced).
ER1200 WaterTorches operate at 175°F in 70°F ambient.

He has spoken on many talk shows and presented his technologies at Conferences around the world. *He is a leading force for the practical development and implementation of Eco-Sustainable Energy technologies*.

Proof that On-Board Brown's Gas (BG) Generation & Supplementation Works

by George Wiseman, **January 2012**
(for updates http://www.eagle-research.com/cms/node/443)

I've compiled this whitepaper to address the main issues that 'experts', critics and skeptics have about on-board electrolyzer technologies.

Please feel free to send it to anyone who thinks that on-board electrolyzer technology *can't work* AND there is no '*PROOF*'.

Also PLEASE feel free to send me comments and updates to the information presented below. *I would like this to* continue to *be the most accurate and authoritative* 'proof of concept' *document on the Internet*.

Main Issues include:

1. If it works, why aren't the automotive companies using it?

It doesn't matter, to the 'experts', that there are over 10,000 fuel saver patents; **none** of which are on the market. It doesn't matter that the current World Record for fuel economy is over **11,000 MPG**. It doesn't matter that the Government, Vehicle Manufacturers, Oil Companies, Wall Street and other Vested Interest would lose trillions of dollars if KNOWN and PROVEN energy saving technologies were universally applied. It doesn't matter that there is NO incentive for Vested Interest to apply energy saving technologies and **EVERY incentive to suppress them**. I can prove that Governments and Vehicle Manufacturers KNOW on-board BG technology works… *But **ONLY they** can answer the question of why they don't use it* or any of the other thousands of energy saving technologies that **are suppressed**.

2. How do you bypass the second law of thermodynamics?

The second law is stated in a lot of ways; in this case we'll use "***you can't get more energy out than you put in***"… It doesn't matter, to the 'experts', that combustion is a chemical process (initially) not a thermodynamic one; or that *internal combustion* characteristics are COMPLETELY different than *external combustion*. What matters is a reasonable theory explaining where the 'extra' energy comes from. **I present one below.**

3. If it works, then why aren't there any scientifically credible studies that prove it works?

It doesn't matter that there are thousands of user testimonials quoting gains greater than 25% (and up to 100%), on virtually every make and model of vehicle. Testimonials are not enough to influence the minds of 'experts', critics, skeptics or valid evidence for Government Agencies the Vested Interest use to suppress these technologies. It doesn't matter that the reported gains are so dramatic as to be unexplainable by 'tune-ups' or 'driving more carefully'. What matters is producing just ***ONE** credible, valid scientific study*. The 'experts', critics and skeptics say there are *NONE!* **Just ONE would be enough**; say the 'experts', critics and skeptics…

This document does NOT address using PURE hydrogen (H_2) as a stand-alone fuel. I discuss options like this in my Water as Fuel books.

Also; I do NOT address BG systems that use on-board batteries, to provide the electricity to make enough BG to run the engine **totally on BG** (*like Denny Klein did*). Yes, batteries would allow you to create enough BG to run the engine purely on BG and yes, internal combustion engines run GREAT on BG (see my BG video 2); BUT if you intend to carry batteries (so you have stored electricity available anyway), you'd go **at least three times the distance** if you took out your inefficient IC engine and replaced it with efficient electric motor technology. *Using batteries to make enough H_2 or BG* ***to fuel*** *an IC engine is usually a VERY inefficient use of BG technology*.

The EXCEPTION is to use batteries (charged at home) to create on-demand, on-board BG that is used **ONLY to SUPPLEMENT** the carbon-fuel. This eliminates the parasitic load on the engine and maximizes the efficiency of producing the BG (CBC[105] further increases efficiency).

IMPORTANT! I do NOT EVER recommend compressing BG in a tank; that is literally a BOMB waiting to explode. BG must be produced on-demand (aka HOD) so there is NO safety risk.

What this document does provide is ***<u>applicable</u> credible proof*** that adding *supplemental* Brown's Gas (BG), produced *on-demand* and *on-board* the vehicle, to engines running on ordinary carbon-based fuels **can** improve combustion efficiency enough to reduce net fuel consumption and pollution *while maintaining full power and performance*. (Proofs start with **APPLICABLE Credible Proof Documents on** page 409 below).

The technique of using **hydrogen** (H_2) as a combustion initiator, stabilizer and enhancer for carbon-based fuels has been well researched and proven for many decades.

The benefits of adding H_2 to carbon-based fuels (ex: methane, propane, gasoline, Diesel and crude) are factual and well documented. Benefits include easier start, lean-burn, faster more complete combustion, reducing idle speed and less pollution of all kinds.

Pure H_2 can be carried on-board a vehicle using high-pressure bottles, cryogenic liquid, metal hydrides and using various chemical techniques.

Pure H_2 can also be 'created' on-board by various 'fuel reforming' technologies, separating H_2 from fuel or alcohol or using sacrificial metals.

BUT almost all of the pure H_2 addition and supplementation that has been researched is **NOT BG**. **BG is** ***NOT*** **pure H_2.**

BG is unique gas, *a combination of constituents*, created from water using electricity though an electrolyzer that is **specifically** designed to NOT separate the gas constituents (more below).

Brown's Gas is also known under many trade names including but not limited to: Rhode's Gas, Hydroxyl, Spirig Gas, Hydroxy, Green Gas, BG, Klein Gas, Aquygen, HHO, HRG, SG Gas, Ohmasa Gas, 'Higher Energy Water' and (*misnamed by Wikipedia*) OxyHydrogen.

Unfortunately most BG advocates *quote non-applicable studies* when trying to provide credible proof that BG supplementation actually works.

---

[105] Capacitive Battery Charger

They want their audience **to 'infer' and assume** that since one of the main components of BG is H_2, *that the H_2 studies have some validity*. Unfortunately this assumption doesn't work because **1.** *BG isn't just H_2* and **2.** It doesn't address the **main reason** 'experts', critics and skeptics are 'certain' that on-board BG technology is a fraud.

The 'experts', critics and skeptics 'KNOW' it takes more energy to create the BG than you can possibly get from it during 're-combustion'.

Their reasoning has validity (explained below) **and would be true** *if BG were burned as the ONLY fuel*; but also shows ignorance of important combustion characteristics (explained below that) when small volumes of BG are used **to supplement** regular fuel.

Validity of 'Efficiency' Argument used by Skeptics:

Since BG is created using electricity, and the electricity comes from the alternator, and the alternator is driven by the engine, and the engine runs on fuel; then **the electricity needed to make BG comes from the fuel** *normally used by the engine*.

Any competent mechanic knows, *because of the inefficiencies involved in each of the 'energy conversion' steps above*, it takes about 11 watts of fuel (actually consumed by the engine) to make 1 watt of electricity from the alternator.

Here's the math: For every watt of fuel the engine burns, the system inefficiencies take away the energy as follows: the gasoline engine is about 25% efficient; the belt drive about 75% efficient; the alternator about 50% efficient; resulting in a watt of fuel needed to produce 0.094 watt of electricity (this can be considered to be a median, as above efficiencies vary widely).

Also consider the **efficiency of the electrolyzer** *that uses the electricity to make the BG*. Traditionally designed BG electrolyzers use up to 7 watt-hours to make one STP Liter of BG (28% efficient). **So you'd then need to burn *38 watts of fuel* to make 1 watt of BG.** We use modern BG electrolyzers that use less than 2 watt-hours to make a STP Liter of BG (100% efficient); so in this document, we consider the ratio of fuel watts to BG produced to be 11:1.

What this argument-explanation actually means is that in order *to achieve ANY gain, the BG catalytic effect must be able to release 11 times MORE energy* (from increased combustion efficiency) than the energy (in fuel) the engine consumed to produce the BG.

What it ALSO means is that once you've generated the optimal volume of BG (for the catalytic effect) any *additional* BG produced **LOSES your gains** at a ratio of **11:1**. *The optimal BG volume varies in every application;* so being able to *efficiently* vary BG production is also vital.

And finally it means that the more efficient your total system is, the higher gains you will get!

'Experts', Critics and Skeptics Ignorance

Unfortunately, most 'experts' are unaware of one of the most important benefits of BG supplementation, which is its function as a combustion catalyst. Ordinary H_2 has a relatively small combustion enhancement effect and 'experts' assume that BG is the same as H_2. Nothing could be farther from reality.

BG is a mixture of at least 6 constituents, H, O, H_2, O_2, H_2O (as water vapor) and ***Electrically Expanded Water (ExW).*** *his mixture doesn't just enhance combustion like H_2 (described previously)*. **Because of the ExW**, BG acts as an actual ***combustion catalyst.***

ExW is a hitherto unknown form of water. I discovered and named ExW in 1996, Yull Brown previously called it 'fluid crystal' and Ruggero Santilli subsequently calls it 'Magnacules'. Proof of existence and characteristics of ExW are not covered in this document; I'll detail that elsewhere. The important point here is to **prove ExW effect** as a **combustion catalyst**.

ExW is the reason WHY BG works

BG's catalytic effect works at the molecular level, helping the fuel's atomic bonds to break with less energy input. It's called ***'lowering the combustion self-propagating endothermic***[106] ***energy requirement'.***

In the chemical process of combustion, the fuel molecules *must actually break apart*, ideally breaking all the atomic bonds in the molecule, allowing all the individual atoms to become free. The energy *normally* required to break the fuel apart, *to break the atomic bonds*, **is well known** (detailed in my Brown's Gas Book 1) and is called endothermic* energy (the energy that's put INTO the process).

Once the atoms are free, they usually (ideally) recombine to form the 'exhaust' molecules of water (H_2O) and carbon dioxide (CO_2). The energy to 're-form' into exhaust constituents is much less than the energy it took to initially break apart the fuel molecules, so some energy is 'left over' and manifests itself as 'heat' (aka exothermic energy). This normal 'oxidation' of fuel provides the excess heat that powers your engine.

To continue combustion (called self-propagation) the chemical process 'takes' some of the exothermic heat to use as the input energy to break apart more fuel molecules. Thus ALL the endothermic heat (GROSS endothermic), which was inherently available in the fuel, does not show up as excess heat (NET exothermic) because the *traditional* combustion process 'took' some of it back.

As a catalyst, BG lowers the amount of heat energy the chemical reaction needs to break apart the fuel molecules and thus more of the, **already inherent**, energy shows up as excess heat. The 'extra' heat did not come from 'nothing', ***it was always there***, just ordinarily absorbed by the combustion process.

Internal combustion engines are *heat engines*. With BG you can use less fuel to *get the same heat* as before AND since the combustion happens faster, smoother and *during the optimum time* (combustion timing is **very** important for reciprocating internal combustion engines). Correct timing allows the 'extra' heat energy to be efficiently converted to mechanical energy (an additional bonus).

It is VITAL to understand that **EFFICIENCY** is the KEY to achieving optimal results with BG supplementation. The less parasitic fuel (used by the engine) to create the BG, the greater the beneficial effects of the BG... Because MORE heat will be available for the engine (at the right time) to convert into mechanical energy. Techniques and options to increase engine, alternator and electrolyzer efficiency are discussed in my HyZor Technology book.

---

[106] *Endothermic: Absorbs energy from its surroundings in the form of heat.*

The quantity of exothermic (net additional) heat energy released is far greater than the energy used to make the Brown's Gas. *It's not magic, it's simple chemistry*.

Catalytic reactions are well known in chemistry and used everywhere. The 'experts', critics and skeptics simply don't understand that, *in this application*, BG is a **CATALYST not a FUEL**!

Efficiency is the key to optimizing on-board electrolyzer gains. You do not want to **lose** all your 'additional' heat energy with inefficiency.

1. You need to produce (generate) your electricity as efficiently as possible

(*HyZor Technology options can help you get the parasitic ratio down from 11:1, see below*).

2. Then you need to produce (generate) the BG as efficiently as possible.

Traditional electrolyzers produced gas with efficiencies in the range of 7 watt-hours per liter of STP gas. *You shouldn't consider any on-board electrolyzer technology with an efficiency that requires more than 2 watt-hours to make a STP liter of BG*.

Eagle-Research HyZor Technology is based on BG electrolyzers that have been independently, scientifically proven to produce BG with less than 2 watt-hours/liter of STP gas.

Here are FAQ discussing why you may or may NOT want to use our HyZor Technology:

http://www.eagle-research.com/cms/faq/fuel-savers-general/er-hyzor-general

NOTE: Slightly off topic, but go to this link to learn that the 14.7:1 air:fuel ratio is a LIE.. that anyone can easily prove for yourself.

http://www.eagle-research.com/cms/blog/fuel-savers-general/1471-airfuel-mixture-lie

3. Finally, **you must use** appropriate **C**ombustion **E**nhancement **I**nterface **T**echnology (**CEIT**). Your vehicle's fuel system was designed to operate using *inefficient* combustion technology (not changed since the 1800's). When you make the combustion more efficient, *the modern fuel computer usually reacts by adding more fuel* to 'compensate' and bring the 'efficiency' back *down* to where it '*thinks*' it should be. Appropriate CEIT allows you to smoothly merge your combustion enhancement technology with your existing fuel system, so you can optimize your efficiency (and thus savings). *CEIT options are discussed in other documents,* (like the Carburetor Enhancer Manual and EFIE Manual); also appropriate MAP/MAF Enhancers…

We use Brown's Gas to increase the efficiency of internal combustion and then (for optimum results) **add water** to compensate for the fuel mass that we have reduced (*water replaces the volume of fuel normally used as the combustion 'cooling' fluid to keep the NOx low*). We describe appropriate water technologies in our 'Brown's Gas', 'HyZor Technology', 'Water Injection' and 'Super Gas Saver Secrets' books and their associated online Resources.

The ratios below are based on our own internal combustion research and on data acquired from various other sources that add BG to assist carbon-fuel combustion.

Our research so far indicates that the BG catalytic effect is much more effective on long chain hydrocarbons. So Methane (and Compressed Natural Gas) has the least gain (5%), Gasoline (Petrol) has a greater gain (around 25%), Diesel has a very good gain (around 50%) and heavy oils (like the crude used to fuel ocean going ships) get the greatest gain (can replace up to 90% of fuel with water). Coal is better yet. All this assumes, of course, proper installation and implementation of the Brown's Gas technology and water injection.

Our research shows that ratios as high as 5,000:1 air:BG can have a positive effect. It is true that more BG may (often does) result in higher fuel savings, and there is an *optimum ratio* for any given application (we are researching to find that ratio). ***After the volume of BG required for the catalytic effect is achieved, any additional BG produced results in mileage lost***. As you add more BG, first you start losing your gains and then, if you keep adding BG (that you are using fuel to produce) you end up with a net mileage loss.

It is vital to realize that the **QUALITY** of the BG is more important than the **QUANTITY** of gas. *It is the ExW portion of the BG that is the catalyst and is giving you your gains*. So what would be more effective… 10 liters of BG that contains 10% ExW or 2 liters of BG that contains 50% ExW?

Answer; they both contain 1 liter of ExW and would have *exactly the same effect*. **BUT** the 10 liter sample likely took more amperage to make (thus had more parasitic fuel consumption) and therefore wouldn't show as great a gain (maybe even a loss).

The ideal is to develop an on-board electrolyzer that maximizes ExW production *while using the least amount of electrical power* (to minimize parasitic fuel consumption). That is what we do with the HyZor Technology. So far, we have demonstrated that 2 amps of current through our HyZor can achieve the same gains others are getting using 20 amps.

Further, one must always consider the amperage capacity of the vehicle's alternator. Most light vehicles have around a 35 amp alternator; which needs to provide electricity to the headlights (14 amps), park lights (8 amps), ignition system (2 amps), Heater/air conditioning fan (6 amps) and a host of other items like the computer, radio, iPod charging, etc.

A 35 amp alternator means that it will produce a MAXIMUM of 35 amps under ideal conditions (usually with the engine at about 2000 RPM or above). Alternators do not produce their rated amperage at lower RPMs. When the load on the electrical system is requiring more amperage than the alternator can provide, *the excess is delivered by the battery,* until the battery is discharged. *Using too much amperage will drain the charge from your battery* and/or burn out your alternator. Be very careful choosing on-board electrolyzers that require a lot of amperage.

Applicable Credible Proof Documents

Because there is such a prevailing miss-understanding among 'experts', *that on-board electrolysis will not provide any measurable benefit*, there are currently few ***applicable*** scientifically credible studies for BG proponents to quote, *because 'experts' obviously wouldn't waste their time on something they* ***'know'*** *won't work*.

Fortunately there ARE a few…

and I suspect that there will soon be many more, because of the massive ground swell of people that are applying the technology to their vehicles in spite of the 'experts', critics and skeptics pontifications (*People believe their friends* and bypass the ignorant talking heads).

Experts will eventually have to 'prove' WHY the technique works, because the technology has already been accepted by the ('ignorant' but **practical thinking**) public **BECAUSE it WORKS**!

As I stated before, you'll find most people *who promote on-board electrolyzers (aka generators)* using the same 'proofs' because there are so few and they are hard to find. Also most of the 'proofs' they do use are 'invalid' because they are the WRONG technology (pure H_2 supplementation). NOW, everyone will finally have credible, **applicable** proof!

I've worked hard to find a reasonable quantity of unique, applicable, credible, scientific documents that prove, *beyond the shadow of doubt*, that when generated from an on-board electrolyzer, BG **can** improve the combustion of carbon-fuels to achieve lower fuel consumption and pollution while maintaining full power and performance. (I'm not saying WILL improve, because there are too many variables, I'm saying CAN improve; *and should if everything is done correctly*.)

Skeptics state that there **CAN'T BE** any proof *so there* ***IS NO*** **such proof**. It should only take ONE *credible document* to use as proof… if the 'experts, critics and skeptics are honest**.**

Here's the smoking gun…

GUIDELINES FOR USE OF HYDROGEN FUEL IN COMMERCIAL VEHICLES

~ Final Report, November 2007

http://www.fmcsa.dot.gov/facts-research/research-technology/report/Guidelines-H2-Fuel-in-CMVs-Nov2007.pdf - by FMCSA - Federal Motor Carrier Safety Administration

This document specifically mentions on-board electrolysis in Sections 1.2.3, 1.5 and 3.5.

They claim tests on an old Diesel got gains of 4% in economy and 7% less particulates.

This is an incredibly low gain for this technology (see below). ***However, it IS a GAIN AND <u>is included</u> in a Government certified document*** (***proof that the Government KNOWS that this technology is valid!***). This is an **OFFICIAL** USA Government ***GUIDELINES!***

This ONE document should be enough to convince 'experts' critics and skeptics that BG supplementation is *at least* worth a *REAL LOOK*.

It would be interesting to see the actual electrolyzer used and the way it was applied to the engine, to see if the net gains could have been improved (most of these early tests were done with very inefficient electrolyzers).

I tracked down the document it references in section 1.2.3 where it gives the numbers for fuel savings and emission reduction.

Hydrogen Fuel Injection System

Technology Fact Sheet for Canadian Hydrogen Energy Company Ltd.

http://web.archive.org/web/20070710051412/http://www.etvcanada.com/data/Canadian_Hydrogen_Energy_Company.pdf

The document is no longer available on the ETV Canada website, so the link above is an archived version from the internet archive's wayback machine.

Some interesting things about the document are it gives more precise information about the performance claims, and lists information about their verification.

What if the extra energy is not from Brown's Gas (HHO) but a variant of cold fusion? https://www.youtube.com/watch?v=foIWltOShO0

The 'Guidelines' also states (Section 1.2.2) that air:hydrogen fuel mixtures as low as **86:1** are possible (on a Ford V10) but "hydrogen engines can run on A/F ratios of anywhere from 34:1 (stoichiometric) to 180:1" according to **'Hydrogen Use in Internal Combustion Engines'**

http://www1.eere.energy.gov/hydrogenandfuelcells/tech_validation/pdfs/fcm03r0.pdf

The fact is that internal combustion is ENTIRELY different than open air combustion. ***Compression of any fuel mixture allows MUCH leaner mixtures to be efficiently burned*** *(compared to open air combustion)*. This is an example of vital information that is NOT taught to mechanics and is one of the points I make in my book 'Extreme Mileage, 101'.

If that 'smoking gun' wasn't enough; I'm thinking that most 'experts', critics and skeptics should accept documents, that are peer approved for **Society Of Automotive Engineers (SAE)** and **International Journal of Hydrogen Energy**, as scientifically credible independent verification… Most of these papers are copyrighted and need to be purchased.

http://papers.sae.org/971703

Combustion Characteristics of Electrolytically Produced Hydrogen-Oxygen Mixtures

"The paper reports and evaluates the combustion pressures of electrolytically produced stoichiometric hydrogen-oxygen mixtures…"

http://papers.sae.org/2003-32-0011

Investigating Combustion Enhancement and Emissions Reduction with the Addition of 2H2 + O2 to a SI Engine

I included this document as further proof that **BG is NOT the same as H2 and O2,** ***no catalytic action*** ***when using pure H2 & O2*** **(***which is why Wikipedia 'experts' are wrong***)**

"…The hydrogen and oxygen were added in a ratio of 2:1, ***mimicking*** the addition of water electrolysis products… Under the conditions tested, the power necessary to generate the hydrogen on board through electrolysis was greater than what was gained from the engine."

http://papers.sae.org/2006-01-3431

Effects of Gasoline-Air Enrichment with HRG Gas on Efficiency and Emissions of a SI[107] Engine

"The present contribution describes the results of an experimental research where gasoline-air mixture was enriched with a Hydrogen Rich Gas (HRG) produced by the electrical dissociation of water. The HRG analysis shows the presence of hydrogen and

---

[107] SI engine: Spark-ignition engine; your typical gasoline engine.

oxygen together with some additional species… The possibilities of improving engine performance and emissions in correlation with the amount of HRG, the equivalence ratio and the engine operating condition are thus outlined."

http://papers.sae.org/2010-01-2190

Hydrogen Enriched Diesel Combustion

"…using conventional Diesel fuel with mixtures of hydrogen and oxygen generated from water at the point of use…the experiments and the systematic approach followed to reduce the fuel consumption and CO_2 are presented in this paper."

International Journal of Hydrogen Energy

Volume 16, Issue 10, 1991, Pages 695-702 (http://tinyurl.com/5w4e9ny)

Driving cycle simulation of a vehicle motored by a SI engine fueled with H2-enriched gasoline

"…**(theoretical)** significant reduction in the total fuel consumption in the order of 15 to 20% and an associated reduction in HC, CO and NOx emission levels, is achieved…"

International Journal of Hydrogen Energy

Volume 25, Issue 9, 1 September 2000, Pages 895-897 (http://tinyurl.com/4z7yrq5)

Fuel economy improvement by on board electrolytic hydrogen production

"…(actually) tested on four cars… without altering any performance criteria, the system yields 35-40% fuel savings and reduces exhaust emissions."

International Journal of Hydrogen Energy

Volume 24, Issue 6, 1 June 1999, Pages 577-586 (http://tinyurl.com/4puzjny)

Hydrogen as an additive to methane for spark ignition engine applications

(Theoretical) "range of viable operation of such an engine is very narrow"

International Journal of Hydrogen Energy

Volume 35, Issue 20, October 2010, Pages 11366-11372 (http://tinyurl.com/4elndxd)

Hyceltec 2009 Conference

Effect of hydroxy (HHO) gas addition on performance and exhaust emissions in compression ignition engines

(Actual) "…HHO system addition to the engine without any modification resulted in increasing engine torque output by an average of 19.1%, reducing CO emissions by an average of 13.5%, HC emissions by an average of 5% and SFC by an average of 14%."

International Journal of Hydrogen Energy

Volume 35, Issue 23, December 2010, Pages 12930-12935 (http://tinyurl.com/4qlyrrq)

Asian Hydrogen Energy Conference 2009

Reduction of fuel consumption in gasoline engines by introducing HHO gas into intake manifold

(Actual) "Test experiments were conducted on a 197cc (Honda G 200) single-cylinder engine… goals of the integration are: a 20–30% reduction in fuel consumption, lower exhaust temperature, and consequently a reduction in pollution"

FUEL

Volume 89, Issue 2, February 2010, Pages 378-383 (http://tinyurl.com/4s9xswj)

Effect of H2/O2 addition in increasing the thermal efficiency of a Diesel engine

(Actual) "…resulted in 15.07%, 15.16% and 14.96% fuel savings. The emissions of HC, CO_2 and CO decreased, whereas the NO_x emission increased." *I note they didn't add water injection*.

http://www.youtube.com/watch?v=z5s8UCmHLcQ&feature=related

Here are some additional documents (*that don't qualify as 'scientific' proof*) to give you a further 'feel' for the potential of on-board electrolyzers.

This is the 'primary' document used as 'proof' in the past. It's way past time to be updated.

http://www.eagle-research.com/erpdf/fs/HyZor/HyZorProofs/HGS Hydrogen proofs.pdf

Here is a test that was done using Darol Mason's variation of the HyZor Technology.

http://www.eagle-research.com/erpdf/fs/HyZor/HyZorProofs/MightyMite.pdf

This is a study done by the University of Idaho comparing on-board electrolyzer 'theoretical' papers with 'actual' experiments.

http://www.eagle-research.com/erpdf/fs/HyZor/HyZorProofs/Hydrogen Enriched Hydrocarbon Combustion.pdf

Scientific test of Brown's Gas (HHO): http://revolution-green.com/new-research-hho/

BG twice as beneficial as hydrogen alone:
http://www.sciencedirect.com/science/article/pii/S0360319900000689

Daniel Dingle interviews: https://youtu.be/9a3t94I75xA

Daniel Dingle Suppression: https://youtu.be/vD14Q2NxB10 (alternative https://youtu.be/2nt-qK-wIYA)

Les Banki's Water as Fuel Project: www.tuks.nl/wiki/index.php/Main/LesBankiProject

H2G presents its Water as Fuel Technology (replace 95% of fuel with water):
https://youtu.be/DkDVYqdB9I0

Collection of Fuel Saving Articles (some Water-as-Fuel included): www.byronwine.com

Proof that BG enhances fuel combustion: https://youtu.be/A68kTeEpyT0

More videos: www.greenfuelh2o.com/PROOF_s/34.htm

More papers: www.climtechsolutions.com/hoh-industry-papers/

They took an electrolyzer that was getting 8.6 Wh/L[108] and made it produce the same volume of Brown's Gas at 0.28 Wh/L.

Economical hydrogen production by electrolysis using nano pulsed DC
INTERNATIONAL JOURNAL OF ENERGY AND ENVIRONMENT
Volume 3, Issue 1, 2012 pp.129-136
Journal homepage: www.IJEE.IEEFoundation.org

Stationary Diesel engine increases efficiency using Brown's Gas:
http://www.blulabresearch.org/wp-content/uploads/2013/07/2010_Effect-of-H2-O2-addition-in-increasing-the-thermal-efficiency-of-a-diesel-engine_S.Bari-et-al.pdf

Related videos:

- PART-1: https://www.youtube.com/watch?v=z5s8UCmHLcQ
- PART-2: https://www.youtube.com/watch?v=FqWJgXlgypw
- PART-3: https://www.youtube.com/watch?v=6Dl6iv8qQv4

Testimonials

Testimonials are a real grey area. They definitely don't qualify as scientifically credible documents; but they do add to the **body of empirical evidence**. The government's 'rules' of using testimonials as sales aids are fairly strict. You need to have written permission from the author to publish the testimonial, you need to make it clear that it is a testimonial and you **can NOT** make *'claims'* based on the wording of testimonials. So, at most, testimonials give an indication of customer satisfaction. *BEWARE* that there are a lot of promoters who use only the BEST testimonials.

I make NO judgment on the testimonial links below, which are a sampling of what's out there and provided as examples. ***Inclusion or exclusion from this list does NOT indicate my opinion on the technologies used…*** *they were just the first I found as I did a quick online search*. Anybody selling BG on-board electrolyzers will have some testimonials.

(When looking for testimonials, remember to search using other BG trade names too).

http://aquygen.blogspot.com/2008/08/water4gas-testimonial.html

http://www.hhoboostnow.com/testimonials

http://www.hydrogen-fuel.ca/testimonials.php

Videos 'indicating' BG supplementation works

There are many others; if you know of one you'd like to see here, send me the link.

http://www.youtube.com/watch?v=1sVJQfuZnmI

"…mileage tests on my Ram 1500… Stock: 16.4 mpg… O2's + HHO: 23.6 mpg"

http://www.youtube.com/watch?v=Dp8p0_1zBZU

Here's our HyZor "…25% improvement." Later, on long trip, improved over 50%

http://www.youtube.com/watch?v=MzK84JUDnho

---

[108] Watt-hour per liter, is a measure of how electrically efficient the water splitting process is.

"…1986 Diesel 4x4 monster van (international 6.9 liter non turbo Diesel)… goes from 12-16 mpg to 23-25 mpg in town!…"

http://www.youtube.com/watch?v=f9vTK5w7Ixc

Local Police using Water4Gas electrolyzers

http://www.youtube.com/watch?v=7ireXlV7m-k

"…Jeep… from at best 15 MPG to 36.82 Miles Per Gallon"

http://www.youtube.com/watch?v=oBBTpRQnWoA

Lots of different testimonials

http://www.youtube.com/watch?v=EDau1G9ul1I

61% improvement in mileage on dynometer

http://www.youtube.com/profile?user=ZeroFossilFuel#p/c/0/8LKq7wHzxzg

Increasing run time of a gasoline generator

http://www.youtube.com/watch?v=_6jNjPJoS1M

Skeptic rebuttal comments on Water as Fuel test procedure (warning, coarse language)

http://www.youtube.com/watch?v=fGLJ5J5i0Yk

High School student experimentation

http://www.youtube.com/watch?v=Y9y9pC9C2ro

Vancouver Gadgeteers ~ BG-assist scooter (have dynometer test data):

51 mpg in a 2005 Lincoln using a HyZor: https://youtu.be/-Pde3U4NUf4

60 mpg on Ford Escort Station Wagon: https://youtu.be/Yuu-kZ4jgIM

Big Rig Volvo goes from 8.5 MPG to 12 MPG: https://youtu.be/DOddMvbEv_k

News Articles that 'indicate' (not prove) Brown's Gas addition works

http://www.greencarcongress.com/2005/11/hydrogenenhance.html

Pepsi installing on-board electrolyzers:
http://www.greenfleetmagazine.com/article/story/2012/01/pepsi-beverages-company-fleet-adds-hydrogen-injected-trucks-grn.aspx

Japanese water cars on TV news:

1. Small car that runs on water: https://youtu.be/G3yGjve4mlU
   (company website www.genepax.co.jp inactive) and
2. Water van: https://youtu.be/2piZrvXh3-E

Philippine Police Car Powered with HHO:
http://www.rexresearch.com/hhopat/hhocdnpats.html and
http://arizonaenergy.org/News_14/News_Nov14/PhilippinePoliceCarPowered.html

British Car that runs on water (2005): http://www.thisismoney.co.uk/money/bills/article-1593514/The-car-that-runs-on-water.html

Israeli Car that runs on water http://jewtube.tv/innovation/say-goodbye-arab-oil-hello-israels-car-runs-air-water/ and video https://youtu.be/g_2tlnf6y_k

Kit for motorcycle to run on 80% water: https://youtu.be/FPYH1dIh4fM
Another experiment: https://youtu.be/AFKjGQFJzg8
Some mileage tests: https://youtu.be/uFtCuXOJqjQ

On-Board Electrolyzer Patents

Unfortunately, the Patent Office does not usually require a working device or any kind of proof of viability as a prerequisite for obtaining a patent… so patents do not constitute credible proof.

*However, patents do contribute to the **BODY of empirical EVIDENCE** that indicates proper scientific research **should be done**.*

Also remember that every patent is supposed to be unique; there are only just so many ways to do something (though people are always thinking up more, which is WHY there is more than ONE patent). So a 'few' patents can be replicated by millions of users. **ONE idea (patented or not) can revolutionize our entire way of life!**

Every person that has actually acquired a fuel-saving patent went through a process that I can only describe as expensive, time consuming, aggravating, suppressive and usually futile. That they completed the patent process is a good indication THEY believed their apparatus worked.

Patents have an important feature for this PROOF document. They have a **list of references**, which will lead you to MORE. The patent list shown here are only a few of the hundreds that can be found. Search http://www.freepatentsonline.com/ or http://www.google.com/patents

I've occasionally provided links to more details about the inventors and/or their innovations.

US1262034 April 9, 1918 Charles H. Frazer

http://waterpoweredcar.com/frazer.html

US1490975 April 15, 1924 William Howard

US1876879 Sept. 13, 1932 Walter Drabold

US2006676 July 2, 1935 Charles H. Garrett

http://keelynet.com/energy/garrett.htm

US2509498 May 30, 1950 George Heyl

US3311097 March 28, 1967 Georg Mittelstaedt

US3980053 Sept. 14,1976 Stephen Horvath

http://www.couriermail.com.au/news/features/horvaths-hydrogen-fairlane/story-e6freoro-1111119160884

US4023545 May 17, 1977 Edward G. Mosher

US4124463 Nov. 7, 1978 Archie H. Blue

http://waterpoweredcar.com/archieblue.html

US4368696 Jan. 18, 1983 Weldon E. Reinhardt

US4394230 July 19, 1983 Henry K. Puharich

http://www.rexresearch.com/puharich/1puhar.htm

http://www.disclose.tv/forum/water-as-fuel-andrija-puharich-suppression-by-rockefeller-t20291.html

US4936961 June 26, 1990 Stanley A. Meyer

http://waterpoweredcar.com/stanmeyer.html

US5394852 March 7, 1995 Roy E. McAlister

http://www.apfn.net/dcia/mcalister.html

US5399251 March 21, 1995 Yoshiro Nakamats

http://www.rexresearch.com/nakamats/nakamats.htm

US5852993 Dec. 29, 1998 Herman P. Anderson

http://www.waterpoweredcar.com/herman.html

US6126794 Oct. 3, 2000 Stephen Barrie Chambers

http://www.highbeam.com/doc/1P3-2198970631.html

US6314918 Nov. 13, 2001 Steve McFarland

US6209493 April 3, 2001 Bill Ross

US6659049 Dec. 9, 2003 John Zagaja

US6981367 Jan. 3 2006 John Childs (assigned to General Motors)

US7143722 Dec. 5, 2006 Bill Ross

US7475656 Jan. 13, 2009 Yurly Yatsenko

US7753010 July 13, 2010 Keith Rutledge

US7793621 Sept. 14, 2010 William Stehl

Here are a couple of charts from Dr. Scott H. Cramton's research (he has MUCH more)…

The CIA has already 'visited' him even though he isn't American and doesn't live in the USA.

http://www.eagle-research.com/erpdf/fs/HyZor/HyZorProofs/DieselTest.pdf

http://www.eagle-research.com/erpdf/fs/HyZor/HyZorProofs/HHO_40Kw.pdf

"Experts", Critics and Skeptics

It wouldn't be fair to present PROOFs without reviewing the opposite opinions as well. ***I value the opinions of 'experts' critics and skeptics,*** because they (from an outside perspective) point out the issues that they think need to be addressed to PROVE the innovation works as described. This allows me, as the innovator, to put together a much better presentation than I'd likely do by myself; because I get to see what miss-understandings and ignorance I need to address (overcome) to educate reasonably open-minded people.

From decades of experience as an inventor I've found that 'experts', critics and skeptics are **usually unaware** how Vested Interest uses them to help suppress energy saving technologies. People believe what 'experts' say because 'experts' have an 'education'. Unfortunately, most 'experts' do not ever learn that they have a **'Vested Interest education'**. I do value an education (*I learn more everyday*), but I place little relevance on the **opinion** of people who use their **assumptions** (regardless of academic achievements), ***instead of the facts,*** to evaluate a technology.

Any honest person MUST realize that NEW technology and information **may not** fit into the 'established theories' (assumptions) they were taught. After all, it was once KNOWN (as in common knowledge) that *the Earth was flat and that it was the center of the universe*. Technology is advancing at an increasing rate *and thus disposal of old assumptions*. Whatever one learns in 'school' is increasingly out of date the day after graduation.

In my research and experimentation (since 1974) I have gone 'beyond' the education that was impressed upon me (I'm competent in several trades). I've learned **facts** that are **NOT taught** and much about the 'miss-direction' and deception that IS taught. *For example: since the 1950's there are NO **technical** reason why ordinary passenger vehicles do not exceed 200 MPG; see my book **'Extreme Mileage, 101':***
http://www.eagle-research.com/cms/store/fuel-savers/extreme-mileage-101
Here's a partial list of suppression cases: www.eagle-research.com/erpdf/fe/Energy%20Invention%20Suppression%20Cases%20August%2028%202007.doc

I can't present ALL of the 'experts', critics and skeptics because Vested Interest suppression makes almost every 'educated' person fall into that category. So here are a couple that specifically put their reputation on the line addressing Brown's Gas:

Don Lancaster http://www.tinaja.com/

- I respect Don's expertise.
- I have now met all his requirements for proof; as listed in his documents.
- http://www.tinaja.com/glib/trashelc.pdf
- http://www.tinaja.com/glib/muse153.pdf
- http://www.tinaja.com/glib/resbn88.pdf

Eric Krieg http://www.csicop.org/author/erickrieg

- Eric has always impressed me as an honest skeptic, again here's the proof he asked for.
- http://discoverhydrogen.com/blog/2009/10/proof-that-hho-really-works-skeptic.html

MUST-WATCH: Paradigm Shifts by Moray King – Truth, Fraud and/or Kooks[109]: https://youtu.be/hIcuwOvZU5A

---

[109] Eccentric/strange/foolish/insane.

Examples of skepticism in the news and on the NET

FOX recants using mechanics talking bull$hit: https://youtu.be/j2Ioi7ppMcA

WYFF News 4's Tim Waller (Reporter)

http://www.wyff4.com/news/17036761/detail.html

"...1990 Buick Century... lost 2 mpg"

http://www.wyff4.com/video/16847646/detail.html

http://www.wyff4.com/video/17042743/detail.html

GW[110] Comments: First, they used a 'jar type' system, one of the **least efficient** on-board electrolyzers; *I'm glad Water4Gas has since evolved*. Second, they did not use any CEIT at all, so how could they possibly synchronize the electrolyzer to the fuel system and optimize the gain from the enhancements? *The "**richer mixture**' mentioned was a result of the combustion enhancement and needed to be compensated for*. Not using CEIT is like installing a radio and then **not** tuning it to a station.

The mechanics also showed a typical miss-understanding of the laws involved regarding aftermarket modifications; there are NO illegal changes to the emissions system (all emission components are untouched) and the pollution is always dramatically reduced.

http://www.consumeraffairs.com/news04/2008/07/water4gas.html

GW Comments: again, a few **'experts'**, *who have **no knowledge** of the actual operating principles of on-board electrolysis*, are quoted voicing their opinions. Unfortunately, even though the opinions are incorrect, this is the sort of PROOF that the Vested Interest uses to suppress the technologies that threaten their income (trillions of dollars per year).

Found this link on wikipedia.org (Wikipedia has a long history of suppressing BG, which they mistakenly call OxyHydrogen; they do not, yet, accept that BG is made of unique constituents).

http://green.autoblog.com/2008/08/04/why-on-board-hydrogen-generators-wont-boost-your-mileage/

http://green.autoblog.com/2006/11/27/on-board-electrolysis-unit-to-generate-hydrogen-for-injection-to/

GW Comments: Here are typical bloggers, who write based on **'expert'** (but ignorant) **opinion, not facts**. The blog's comments profile a lot of people who are even more ignorant than the 'experts' (I could write a book on the miss-understandings). *The most interesting thing about these blogs is the comments from people who are **ACTUALLY USING the technology**!* They **KNOW it works** and that the **'experts' are WRONG**!

---

[110] George Wiseman

Wikipedia seems to be under the control of the *Vested Interest*. They will NOT accept proofs for on-board electrolyzers http://en.wikipedia.org/wiki/Hydrogen_fuel_enhancement or Brown's Gas (which they miss-name Oxy-Hydrogen http://en.wikipedia.org/wiki/Brown%27s_Gas)

Further Vested Interest Suppression (in my opinion)

Sometimes, when the 'educated' skeptics aren't handling the public perception well enough, Vested Interest steps up with a 'public myth-information' campaign. **They do this by using their Media Resources to 'protect the consumer'**. The examples below are typical from my files. I do not know if Mike Allen or Myth Busters are willing and/or knowing accomplices to this suppression… or if they are ignorant patsies. Either way, the public *gets the message* that fuel saving technology in general and specifically on-board electrolyzers *don't work*.

Mike Allen (Popular Mechanics Magazine)

http://www.popularmechanics.com/cars/alternative-fuel/gas-mileage/4276846

Mike stated, "*My fuel economy is exactly the same, whether the HHO… is turned on or not".*

If the skeptic's theory is correct, *that it takes more energy to make the BG than you can get back from burning it*… then **fuel economy should have DROPPED**! His statement **proves** that the BG was doing SOMETHING! There had to be an 11 time GAIN just to bring it even!

Sorry Mike, your test is invalid for the same reasons you would use if anyone tried to put such a test past YOU! It wasn't a scientifically credible test because it can't be PROVEN to be.

1. You didn't provide the information to support your tests, no testing protocol, not enough information on your testing apparatus, not double-blind and no public access to the raw data.

2. You didn't have an expert pro-BG installer to observe and verify your tests.

3. You *used no CEIT*, and (in my opinion) used the usual (incorrect) mechanics interpretation of the laws involving vehicle anti-pollution equipment.

The FACT is, properly applied, CEIT does not remove, modify or deactivate existing anti-pollution equipment AND the pollution usually drops significantly when appropriate combustion enhancement technology is applied; *so the 'anti-tamper laws'* mechanics *refer to aren't applicable*. Further, the Magnusson-Moss Consumer Product Warranty Act of 1992 allows people to **add** any equipment they desire **without** voiding a vehicle's warranty.

4. You used an inefficient electrolyzer and you didn't provide any efficiency data for it either. You should use an electrolyzer that gets **at least** 2 Wh/L or 8 MMW of efficiency.

When I tried to help Mike with suggestions to make the test credible (thinking that he was simply ignorant)… the PM[111] website refused to allow my posts (obviously I'm on the NOT approved list). He does get lots of posts from people who **KNOW his opinion is incorrect!**

---

[111] Popular Mechanics

Then the next phase of the story…

http://www.popularmechanics.com/cars/alternative-fuel/gas-mileage/4310717

Mike Allen then teamed up with Dateline NBC and an EPA-certified emissions lab to ambush Dennis Lee by creating (in my opinion) another bogus test. It looks very good in the video but there is no way (in my opinion) that it is correct; it's like someone sabotaged it. *Again, there was NO expert pro-BG representative to observe and verify the tests.*

I met Dennis Lee personally when he got out of jail. He and I do not agree on proper business ethics or etiquette; but he is a world-class promoter. **I'm not his friend** yet have to say, this time he's in the right; THIS technology (on-board electrolyzers) actually works.

The report was then used by the Government as an excuse to issue a FTC lawsuit… Dennis Lee was able to prove the technology was valid (*or at least that the prosecution's case was a farce*) but the freezing of his assets and the negative publicity shut down his business anyway; *which was the purpose of the suppression*. Exactly as they did with **Tucker**[112] years ago.

Myth Busters

I love the show, it's entertaining and I thought it was a great concept (I liked MacGyver too). Unfortunately as an inventor who has experimented with some of the technologies they 'bust' I'm really disappointed that they seem to take pains to *build their 'tests' with the* ***least*** *possible efficiency* (you almost have to have some idea of the truth to do it so badly).

Further, their experts, (while undoubtedly educated), really don't show that they understand how the technologies **actually** work. *Like having a Math teacher fix a car in shop class.*

I'm speaking specifically about the Minto Wheel replication (**the tanks were mounted 90° wrong** *with no heat exchangers*) and the on-board electrolyzer (HHO) test (**trying to run a car on a BG electrolyzer without any gasoline** *and with one of the least efficient electrolyzers*).

Since they messed up both of these tests, I give the show about as much credibility as a politician's promise. I now think the show is sponsored by the Vested Interest (who own most of the Media) and is specifically intended to entertainingly miss-inform the public (which they do very well).

If you want to know how to do a Minto Wheel properly, sign up to the Yahoo eGroups:

http://groups.yahoo.com/neo/search?query=minto%20wheel

There are a lot of resources you can download to build a proper wheel. And there are a lot of guys there that can set you on the right track. No, I don't think it's the answer to our shortage of clean energy but I do think it can help some people and it is NOT as inefficient as Myth Busters made it out to be. It does have possibilities as a simple, no moving parts, prime mover that uses NO fuel and produces useful work. No one is building them and it would take a pretty resourceful person to build it for them self. Its cost can be reasonable if you know what you are doing.

---

[112] In 1948 Preston Tucker created 51 advanced automobiles that were too competitive for the big automakers. Watch the 1988 movie 'Tucker: The Man and His Dream' that was made by Francis Ford Coppola and George Lucas, both proud owners of original Tucker 48 cars.

As for the on-board electrolyzer (HHO) test… They first needed to understand that they were testing a catalyst, not a fuel; and trying to run the vehicle on the catalyst (instead of fuel) was an exercise in futility (which they entertainingly demonstrated). **They (deliberately?) confused using BG as a catalyst with using BG as a fuel**.

Further, they were using an inefficient design of electrolyzer, a design that's NEVER been proven to work, which was a 'compilation' of technologies put together and distributed by a man who 'hoped' someone would be able to make it work.

There have been quite a few Water as Fuel technologies invented and the Vested Interest has (so far) been very successful at suppressing them.

A recent example (2007) was Paul Zigouras[113]; he had a system that would split 5 gallons of water per minute using 160 amps at 13.6 VDC. It would produce 150 hp at 4100 RPM on an engine they dynoed. *He was told that it was against the law (in the USA) to mass produce any technology that could crash the economy* and was paid $6,000,000 to stop selling his prototypes on eBay. The USA Government then tracked down every unit that he'd sold and acquired them too.

*He then clammed up so tight **you'd think his life depended on it**.*

Quite a few people are using the clues the pioneers have left behind to try to duplicate the technologies. *To duplicate a technology you first have to assume it worked*.

Mike Allen and **Myth Busters** have reinforced the perception that on-board electrolyzers don't work**.**

Ignorance is easily cured. Stupidity… that's a lot harder. ~ Geneva Wiseman

Common sense isn't so common. ~ Geneva Wiseman

None are so blind as those who will not see. ~ Jonathan Swift

All truth passes through 3 stages: First, it is ridiculed; Second, it is violently opposed; Third, it is accepted as self-evident. ~ *Arthur Schopenhauer (1788-1860)*

How YOU can help spread the truth

This document PROVES on-board electrolyzers, producing on-demand Brown's Gas, **CAN save fuel.**

This PROOF document is an '**industry game changer**' and the first in a series of papers that will change how Brown's Gas is perceived by the scientific community. BG has amazing, *virtually unrealized*, potential in a *spectrum* of applications.

This is a tool that *you can use* to educate yourself, experts, skeptics and critics**.** Post a link to this document on every Facebook, Twitter, Skeptic Blog, YouTube and on-line News comments fields you can find. Here are some example posts...

*I've found a document that PROVES on-board electrolyzers, producing on-demand Brown's Gas (BG aka HHO), **CAN save fuel.*** tinyurl(dot)com/5tke4pj

Scientific PROOF that Water as Fuel technology WORKS! http://tinyurl.com/5tke4pj
[Use **tinyurl(dot)com/5tke4pj** when the website won't allow a URL in the post].

---

[113] More details on next page.

It's time for the truth to be known and accepted! It's time to bypass Vested Interest myth-education with a grassroots truth campaign. If you post links where ever you can (even put the PDF on your own website), first thousands and then tens of thousands of people will learn what the Vested Interest have tried so hard to suppress.

🙂 Have fun with it 😉

Conclusion

You now have documentation that ***PROVES on-board electrolyzers CAN work*** and a *working theory* ***WHY***. Of course, this PROOF also **raises more questions** like:

1. How can we stop Vested Interest from suppressing Free-Energy?
2. What are BG and ExW?
3. What is the optimal volume of BG to fuel ratio?
4. Which on-board electrolyzer do you choose for your vehicle?
5. Can vehicles really run on WATER as the ONLY fuel?
6. Do we have PROOF for all the OTHER uses of BG too?

More articles & books by George Wiseman for your R&D: www.eagle-research.com/cms/node/443

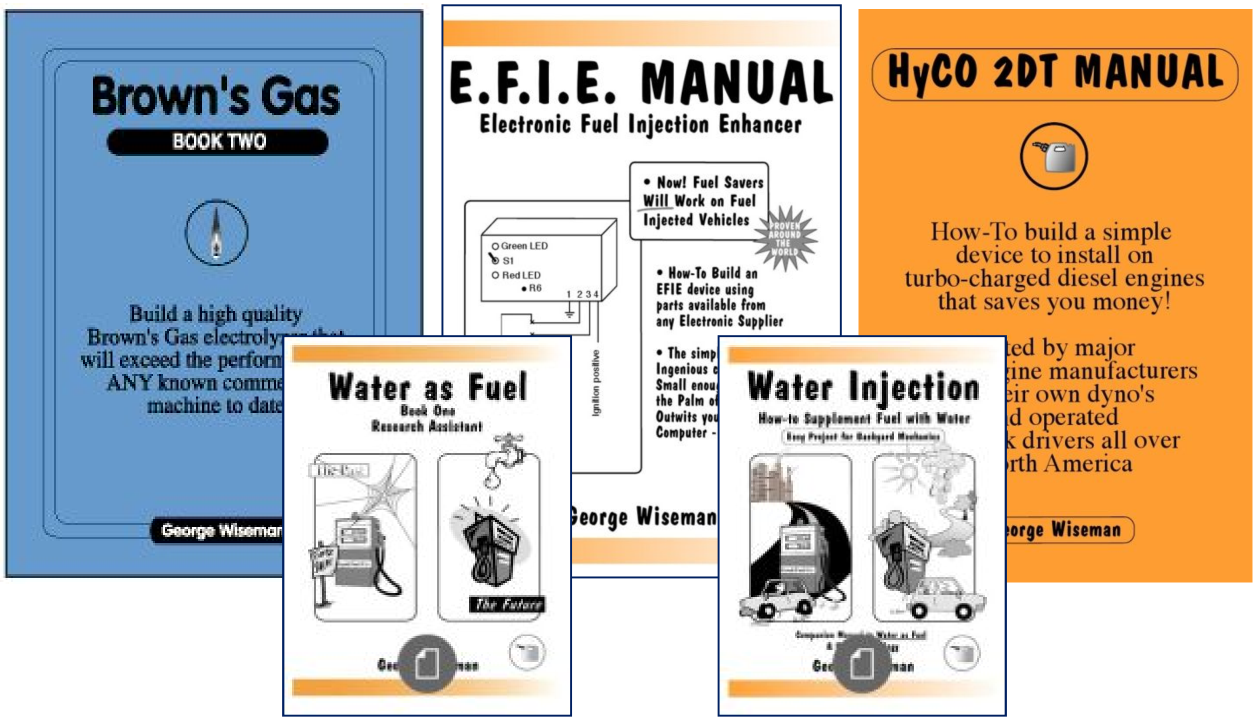

The Electrolyser System of Paul Zigouras

Written by Patrick J. Kelly, 2013

In his document, Moray King draws attention to the HHO cell design of the American, Paul Zigouras who became very well known in the year 2011 due to his cell design which is perfectly capable of running a 320 horsepower marine engine. Paul, at age thirty, had a history of rebuilding marine engines and then selling them. He then was involved in helping a friend who had entered a competition for the car with the highest mpg performance. Paul found that by adding HHO to the air entering the car engine, that they could get 70 mpg on the flat when driving carefully. Their target was 100 mpg, and so they were disappointed by being 30 mpg short of their target.

Paul decided to work on the HHO angle to see what could be achieved and enlisted the help of a friend and sometime freelance employee who was expert in electronics as Paul was not familiar with electronics. Probably without understanding the underlying causes, they managed to utilise several operating principles – cavitation, charged water gas clusters, resonance, mechanical vibration and a 'splitting the positive' style power supply. The overall result was spectacular, culminating in a small cell, into which water could literally be hosed and only gas came out of the other end.

Paul never revealed the exact circuit design and it is reported that he sold the rights to the design for US $6,000,000. The purchasers then contacted the eBay buyer of the latest version of Paul's circuit board and paid $20,000 to buy it back. The eBay buyer was happy with the deal as he had paid just $1,100 for it and so made a profit of $18,900 on the deal. At this time of writing (2013) some eighteen months have gone by and it seems quite clear that the present owners of Paul's circuit design have no intention whatsoever, of sharing or manufacturing the design and so it has been effectively shelved, never to be seen again. They were not interested in the cell, but just the electronics board.

However, a number of things are known about the design, probably sufficient to allow a similar design to be produced.

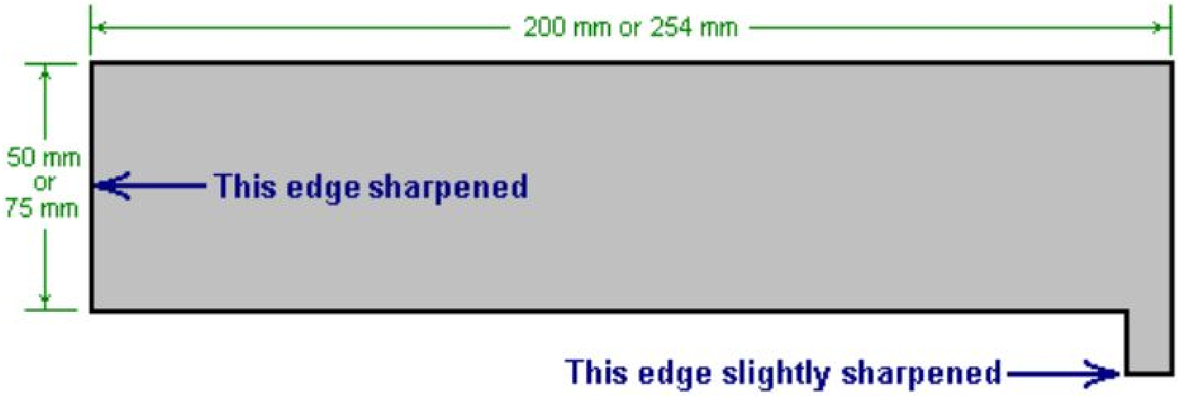

This is just a sample; the free plans can be downloaded from Kelly's website:
www.free-energy-info.tuks.nl/Chapter10.pdf

Independent Validation of George Wiseman's Technology

About the National Hydrogen Association

- Founded: 1989
- Headquartered in Washington, D.C.
- President: Jeffrey A. Serfass.

From 1989 to 2010, the National Hydrogen Association (NHA) was a nonprofit organization focused on advancing the development of hydrogen technologies and their utilization in industrial, commercial, and consumer applications and promote the role of hydrogen in the energy field.

The NHA was a member-based organization and hosted the annual Hydrogen Conference. NHA also provided advocacy on behalf of the stakeholders in the hydrogen economy and worked to support legislation enabling the entry of hydrogen technologies to the marketplace.

In October 2010, the NHA merged with the U.S. Fuel Cell Council[114] to form the Fuel Cell and Hydrogen Energy Association[115].

Image: California Governor Arnold Schwarzenegger speaking at the
National Hydrogen Association Conference and Expo, May 2010
(source: www.autoblog.com/2010/05/07/video-schwarzenegger-promises-hydrogen-highway-efforts-will-c/)

---

[114] https://energy.gov/eere/fuelcells/downloads/us-fuel-cell-council-voice-fuel-cell-industry

[115] http://www.fchea.org/aboutus/

Image: on the right, Jeffrey Serfass, President of the National Hydrogen Association, presents Senator (North Dakota) Byron Dorgan with the Spark Matsunaga Memorial Hydrogen Award, in June 2010 on Capitol Hill (source: www.openpr.com/news/136714/SENATOR-DORGAN-HONORED-FOR-LEADERSHIP-TO-ADVANCE-HYDROGEN-AND-FUEL-CELL-TECHNOLOGIES.html)

First Technology Validation Document

ER1200 is an industrial-strength Water Torch developed and manufactured by Eagle Research Ltd.

This document is an important third-party test of ER1200 performance conducted in 2009 by the NHA, in which the ER1200 was tested at an output production rate of 720 Liters Per Hour.

- Title: "Water Torch Test #1"
- Dated: May 2009
- Author: National Hydrogen Association (NHA)
- Download: www.eagle-research.com/erpdf/bg/WaterTorchTest1.pdf

DESCRIPTION (simplified; physics experts can tell you more about it): This was a test between an air conditioner and the ER1200 WaterTorch, with the ER1200's gas production throttled down so that the electrical load 'matched' the air conditioner's electrical load.

The purpose of this test seems to be a comparison of loads with the air conditioner being a known inductive load. ***This test showed that the ER1200 is essentially a capacitive load. This is an industrial advantage as it tends to correct the power factor issues caused by inductive loads.***

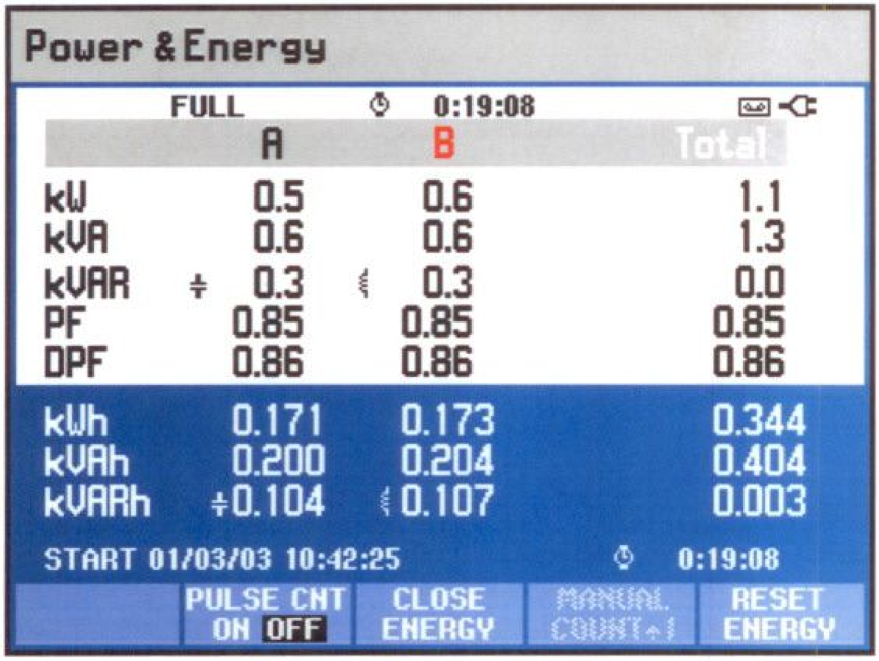

Power & Energy

FULL 0:19:08

	A	B	Total
kW	0.5	0.6	1.1
kVA	0.6	0.6	1.3
kVAR	0.3	0.3	0.0
PF	0.85	0.85	0.85
DPF	0.86	0.86	0.86
kWh	0.171	0.173	0.344
kVAh	0.200	0.204	0.404
kVARh	0.104	0.107	0.003

START 01/03/03 10:42:25 0:19:08

Test Control, 220VAC Air conditioner, run for 19 minutes 8 second

Note, even Kwh readings on A and B phase

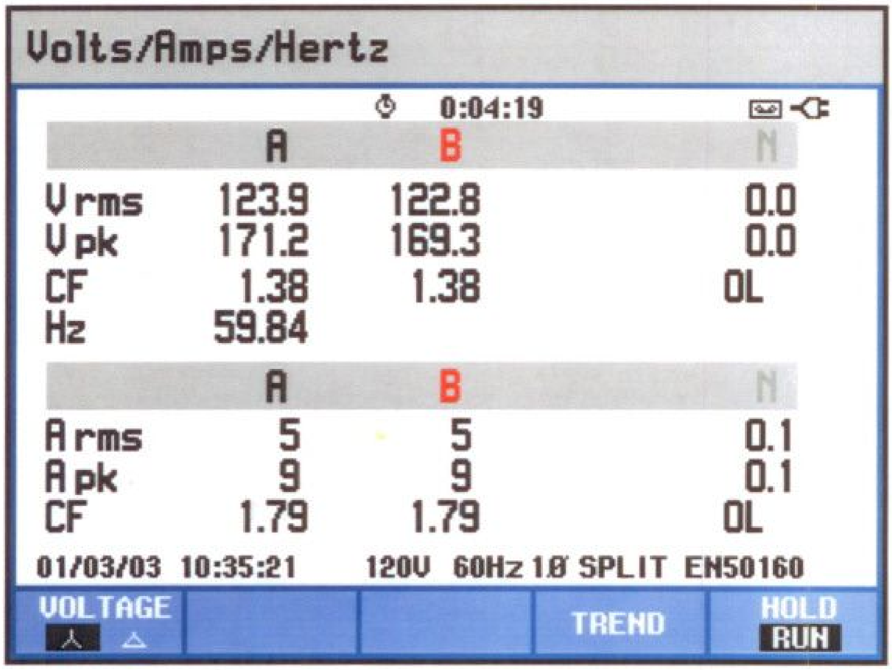

Volts/Amps/Hertz

0:04:19

	A	B	N
V rms	123.9	122.8	0.0
V pk	171.2	169.3	0.0
CF	1.38	1.38	OL
Hz	59.84		

	A	B	N
A rms	5	5	0.1
A pk	9	9	0.1
CF	1.79	1.79	OL

01/03/03 10:35:21 120V 60Hz 1Ø SPLIT EN50160

Test Control – Meter Readings

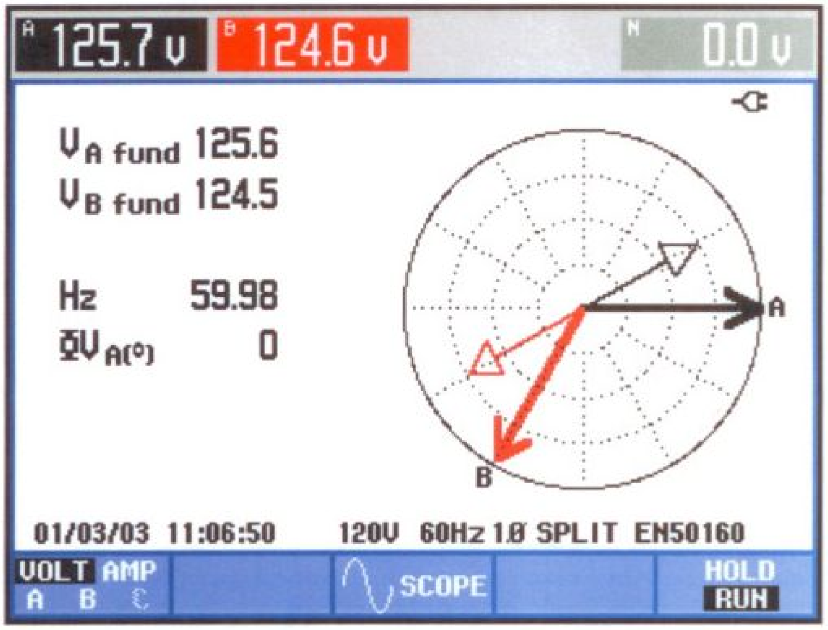

Test Control – Please note phase angle between current and voltage

Test Control- Graph indicating continuous current during test

The ER Water Torch was tested against the Control sample, the torch was operated at approx. 720 liters/hour of gas production. 1 liter every 5 seconds, with the following results.

Water displacement method was used to verify gas production rate

In addition a standard GE (2) phase watt-hour meter was put in parallel with the Fluke 463 Power Quality Analyzer as a control standard. Readings were within .2% of each other

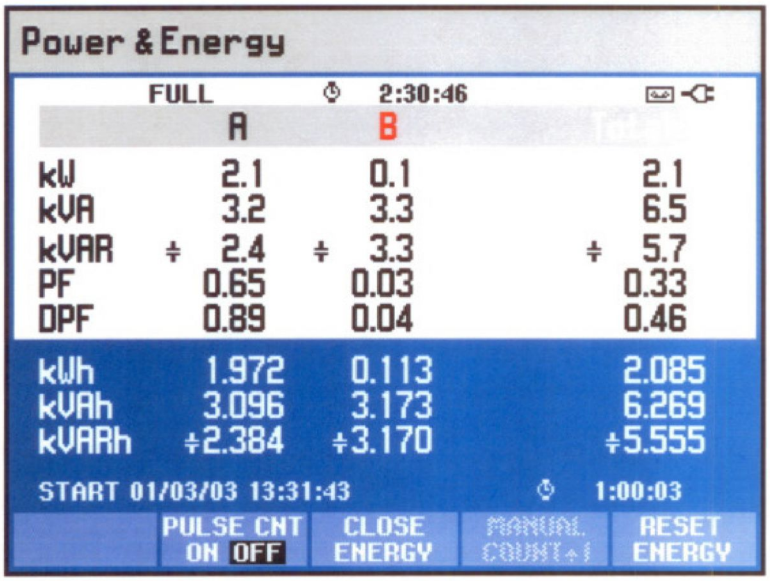
Power & Energy

FULL 2:30:46

	A	B	Total
kW	2.1	0.1	2.1
kVA	3.2	3.3	6.5
kVAR	÷ 2.4	÷ 3.3	÷ 5.7
PF	0.65	0.03	0.33
DPF	0.89	0.04	0.46
kWh	1.972	0.113	2.085
kVAh	3.096	3.173	6.269
kVARh	÷2.384	÷3.170	÷5.555

START 01/03/03 13:31:43 1:00:03

ER Water Torch after 1 hour, 3 seconds. Note Kwh reading A and B phase

Also, capacitive reading on both A and B phase, note larger KVAR reading on B phase

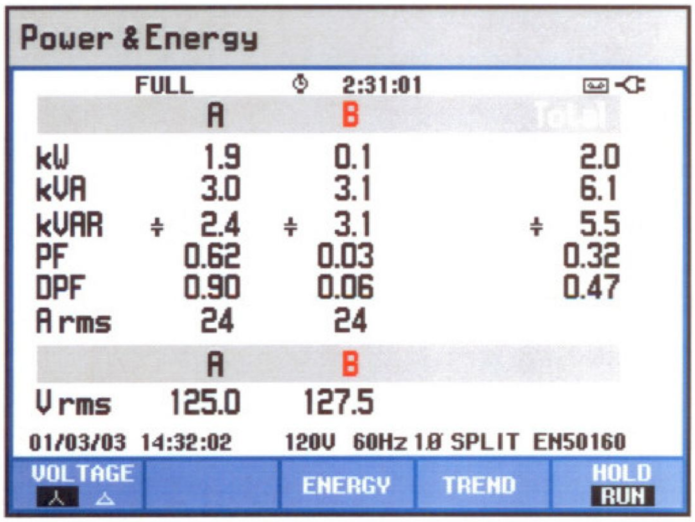
Power & Energy

FULL 2:31:01

	A	B	Total
kW	1.9	0.1	2.0
kVA	3.0	3.1	6.1
kVAR	÷ 2.4	÷ 3.1	÷ 5.5
PF	0.62	0.03	0.32
DPF	0.90	0.06	0.47
A rms	24	24	

	A	B
V rms	125.0	127.5

01/03/03 14:32:02 120V 60Hz 1Ø SPLIT EN50160

Meter readings taken on ER Water Torch during above KWH test

Again, note KW and PF reading between A and B phase

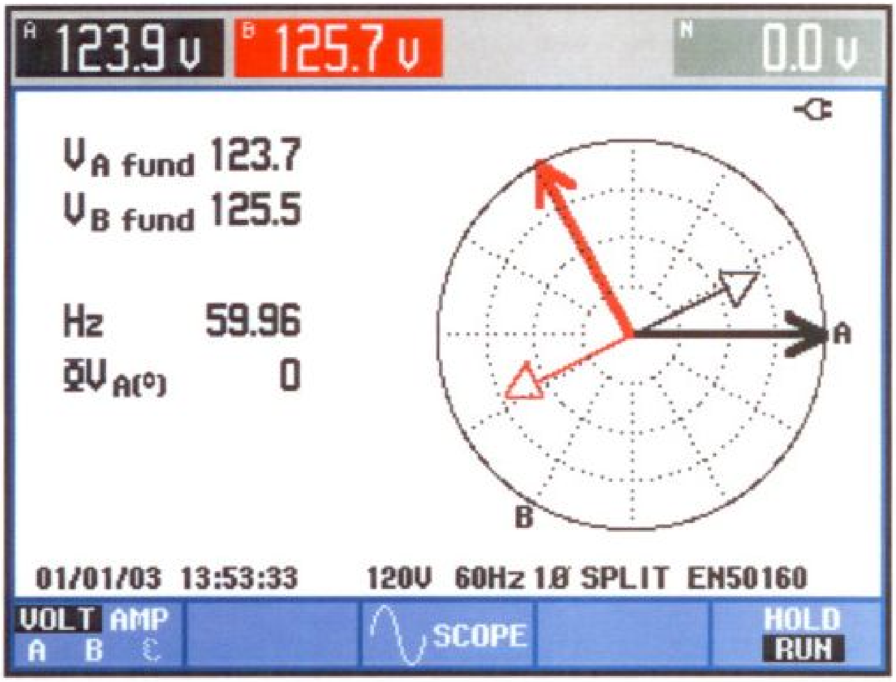

A 123.9 V B 125.7 V N 0.0 V

$V_{A\ fund}$ 123.7
$V_{B\ fund}$ 125.5

Hz 59.96
$\Phi V_{A(°)}$ 0

01/01/03 13:53:33 120V 60Hz 1Ø SPLIT EN50160

Phasor diagram (Voltage) of ER Water Torch in operation, note phase angle difference.

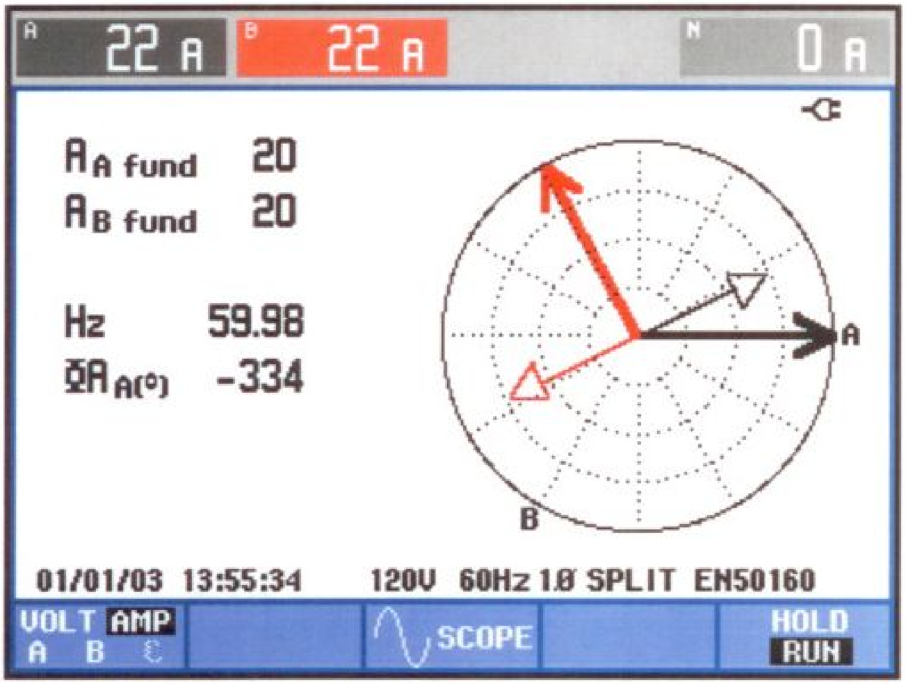

A 22 A B 22 A N 0 A

$A_{A\ fund}$ 20
$A_{B\ fund}$ 20

Hz 59.98
$\Phi A_{A(°)}$ -334

01/01/03 13:55:34 120V 60Hz 1Ø SPLIT EN50160

Phasor diagram (Amperage) of ER Water Torch in operation. Note as above the phase angle difference between current and voltage of each phase…

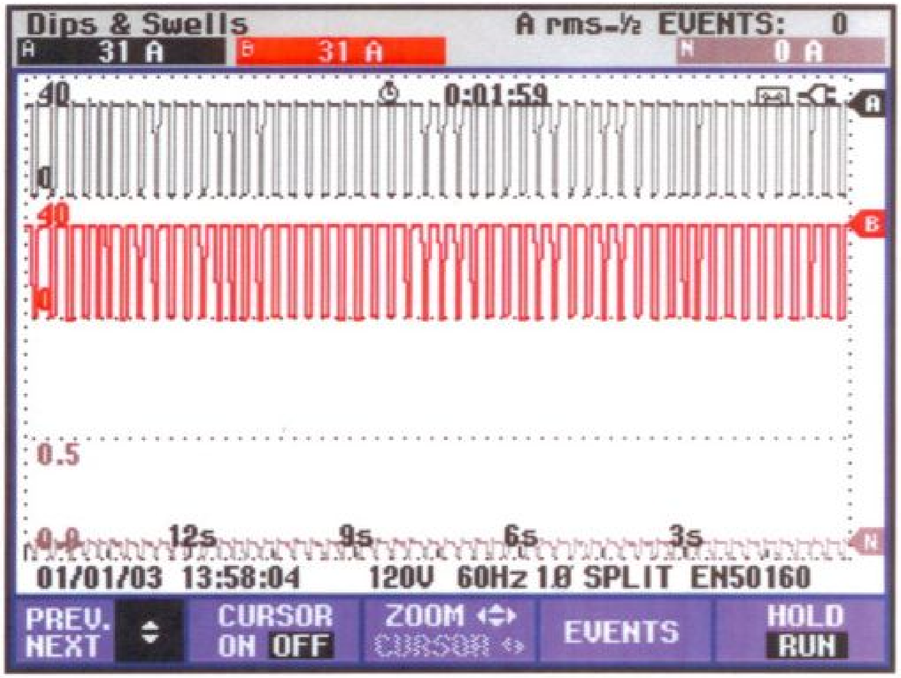

Pulses applied to ER Water Torch A and B phase

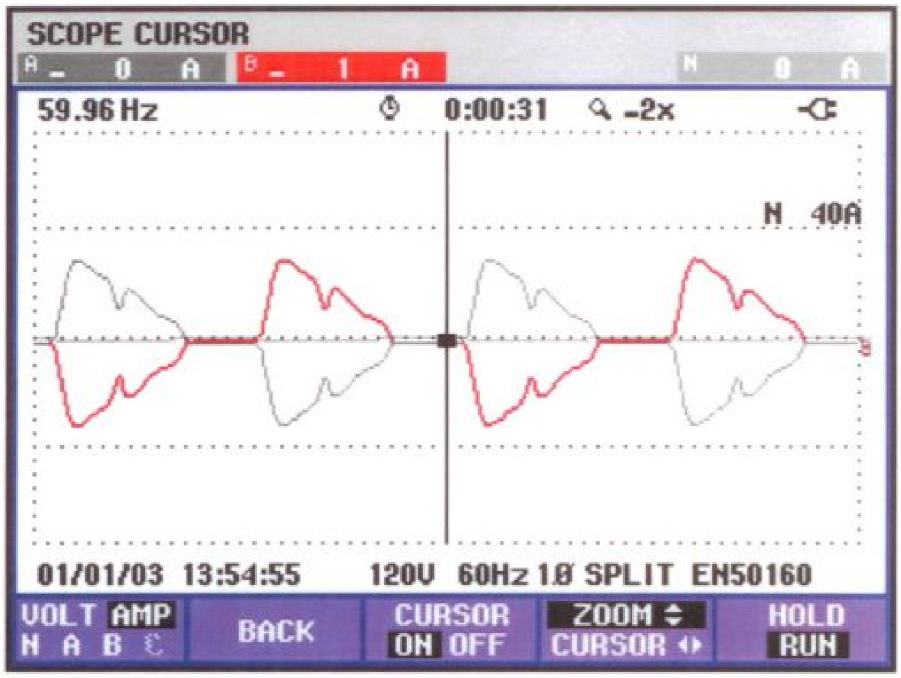

Scope wave form of ER water torch in operation (amperage

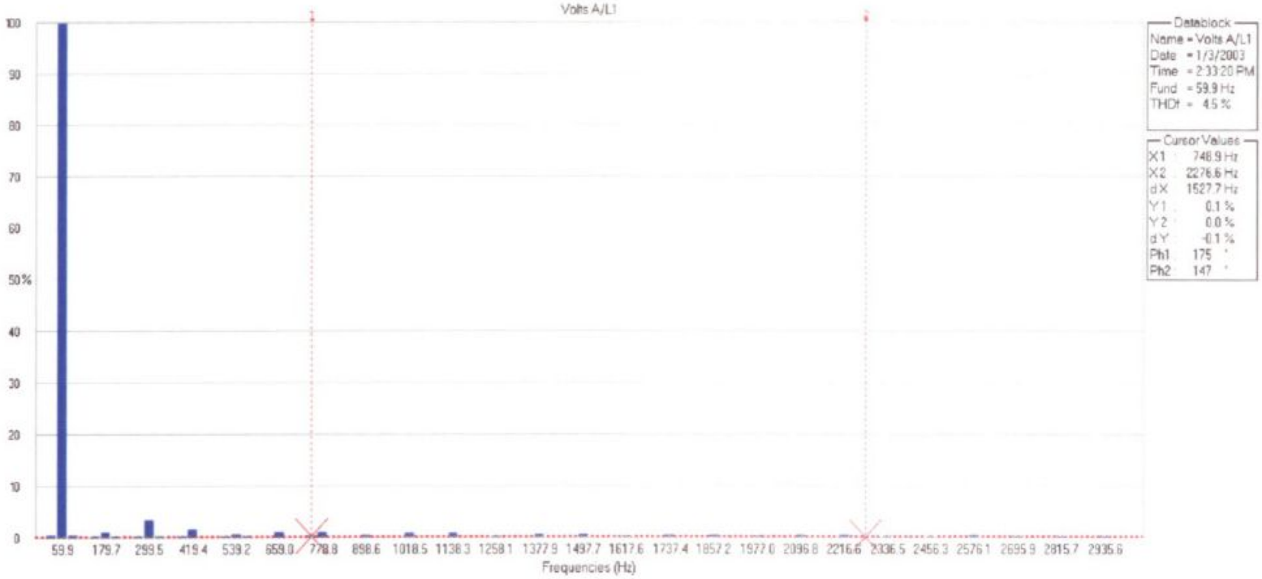

Volts A/L1 Harmonic Graphic

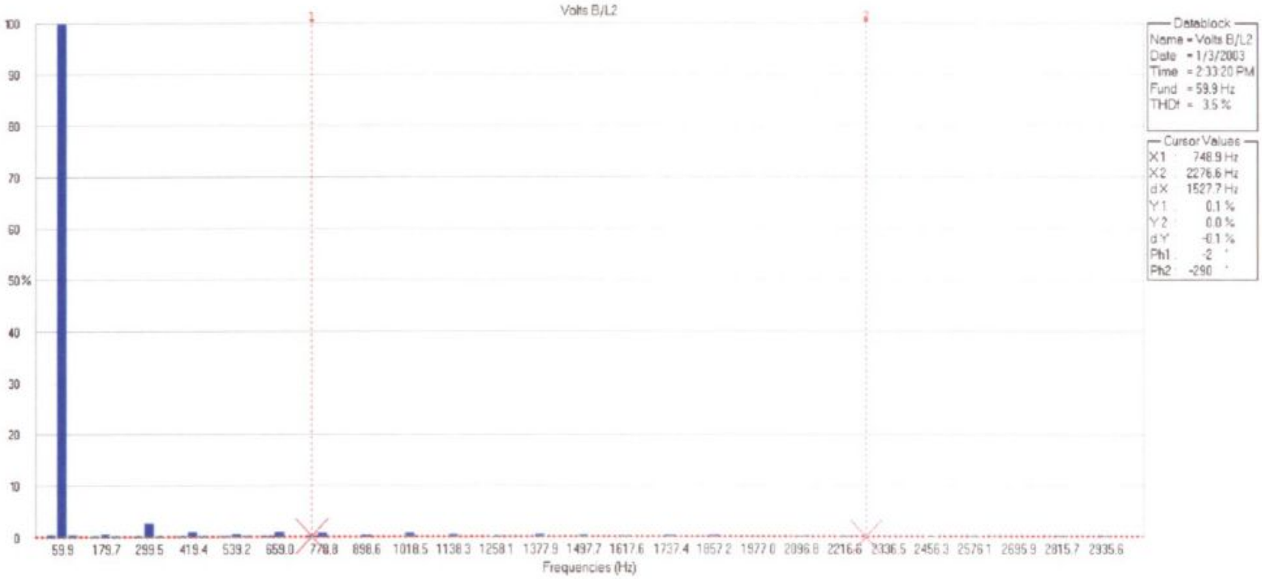

Volts B/L2 harmonic graphic

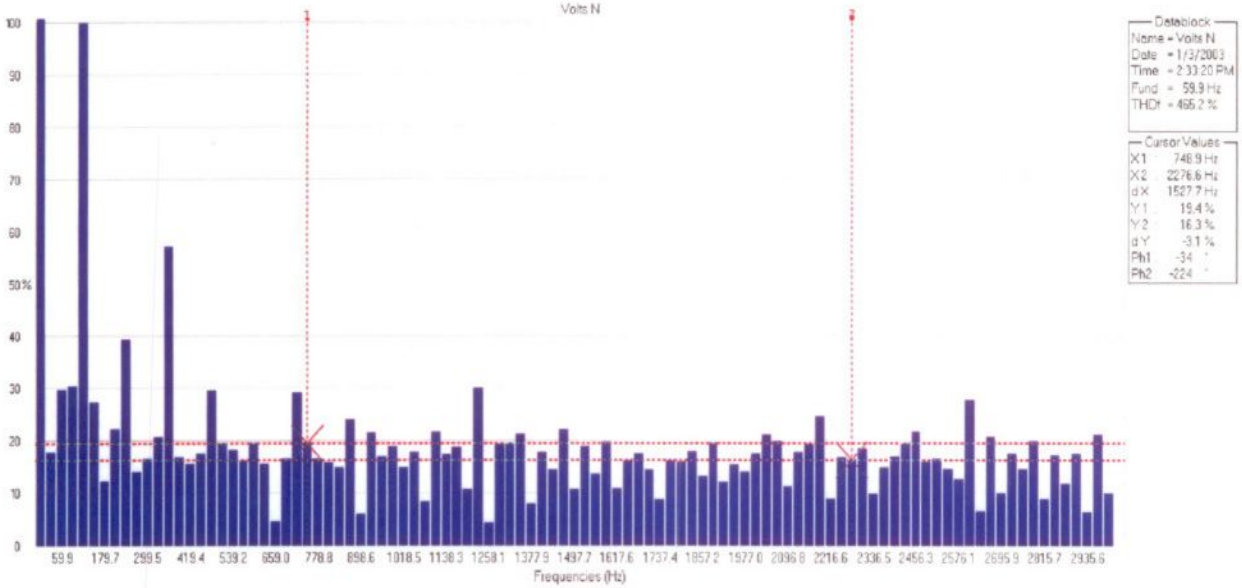

Volts Neutral Harmonic Graphic

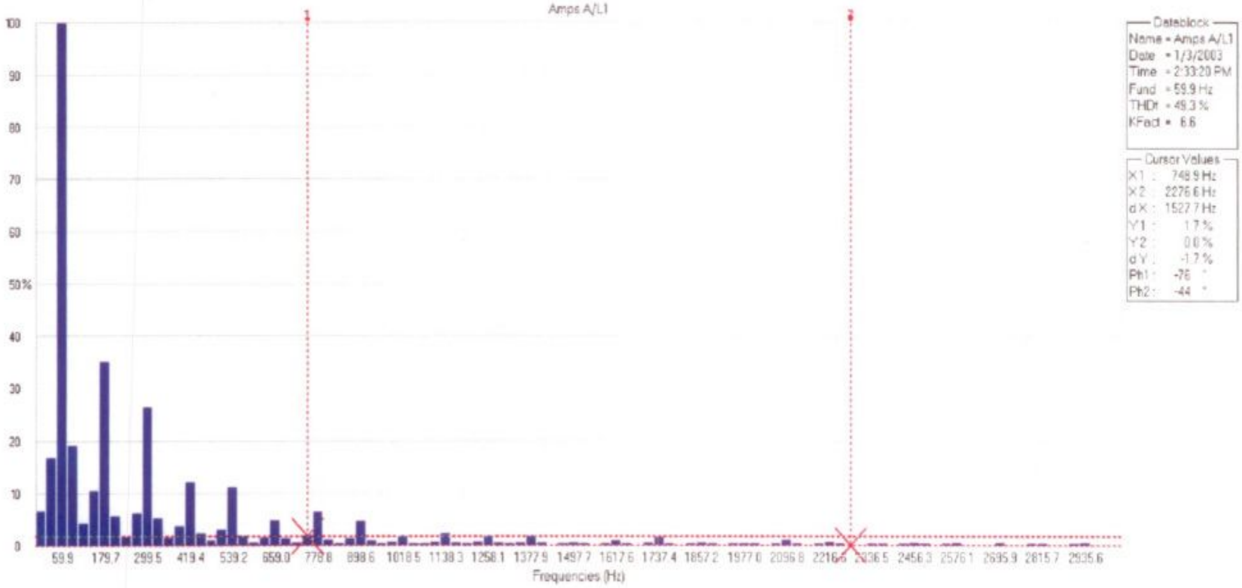

Amps A/L1 Harmonic graphic

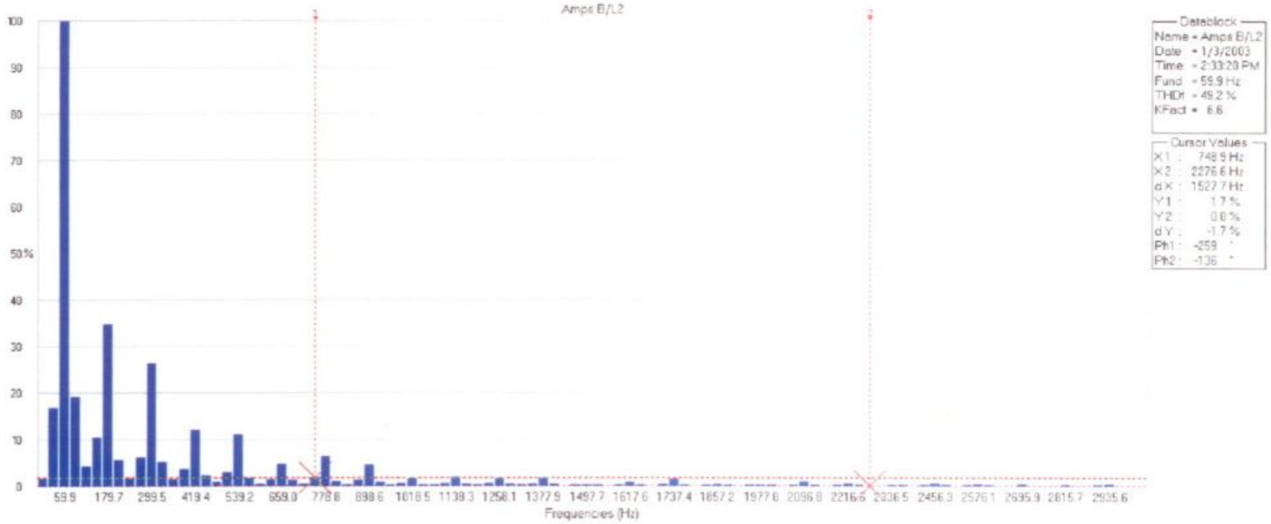

Amps B/L2 Harmonic Graphic

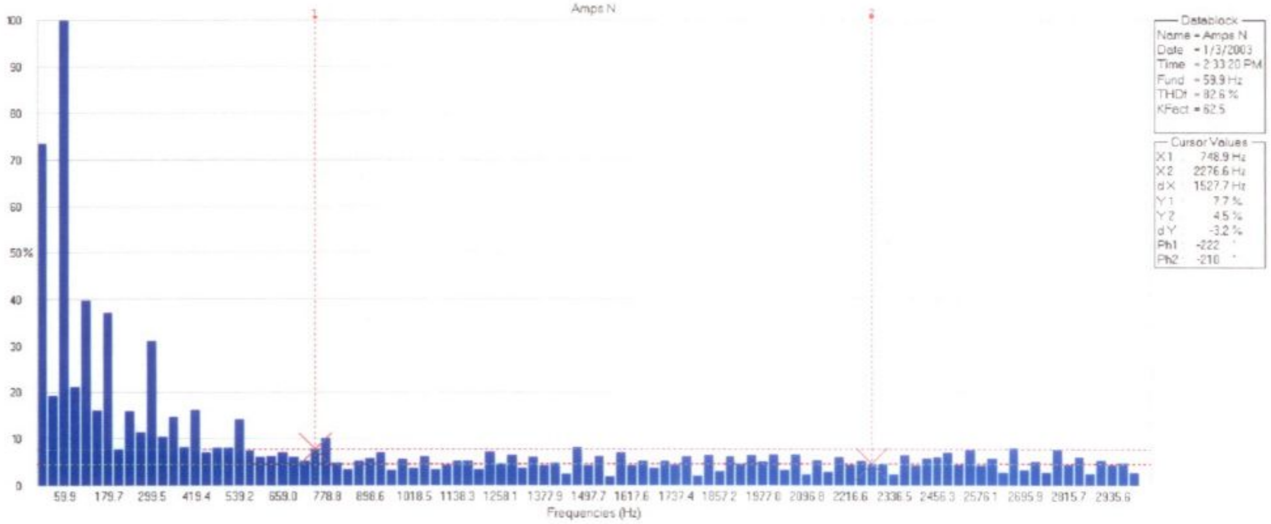

Amps Neutral Harmonic Graphic

Second Technology Validation Document

This is another third-party test of ER1200 conducted by the NHA, in which the ER1200 was tested at full output capacity – 1200 Liters Per Hour.

- Title: "Water Torch Test #3"
- Dated: May 19, 2009
- Author: National Hydrogen Association (NHA)
- Download: www.eagle-research.com/erpdf/bg/WaterTorchTest3.pdf

Test No. 3, May 19, 2009 of the ER Water Torch

During this test the ER Water Torch was tested at full output.

The measured volume was 1 liter in 2.2 seconds or 1,636.36 liters per hour

Phasor diagram of L1 and L2

Note phase angle between voltage

And current. Also note, zero volts on

Neutral leg.

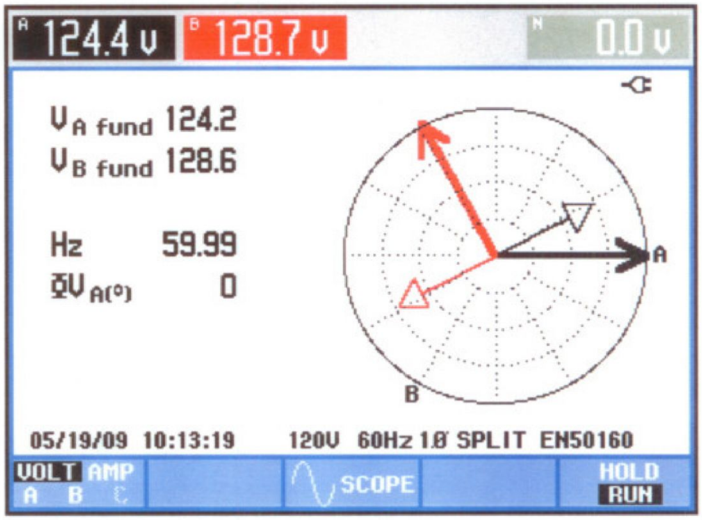

A 124.4 V B 128.7 V N 0.0 V

V_A fund 124.2
V_B fund 128.6

Hz 59.99
$\Phi V_{A(°)}$ 0

05/19/09 10:13:19 120V 60Hz 1.0 SPLIT EN50160

Phasor diagram A phase (L1)

Note phase angle's shown

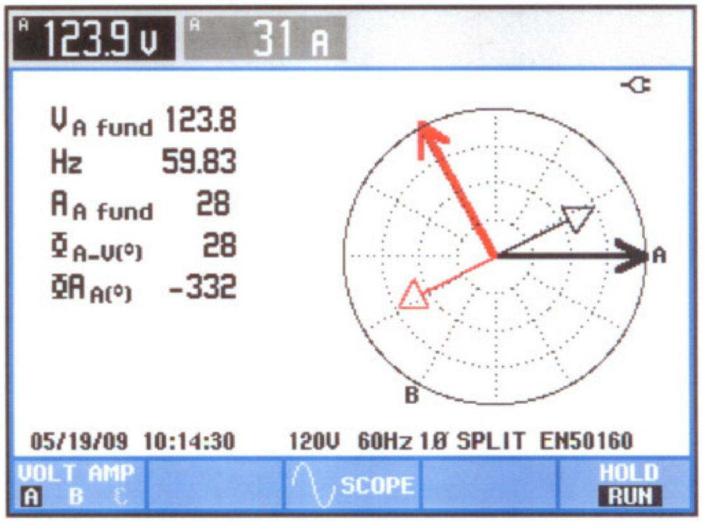

A 123.9 V A 31 A

V_A fund 123.8
Hz 59.83
A_A fund 28
$\Phi_{A-V(°)}$ 28
$\Phi A_{A(°)}$ -332

05/19/09 10:14:30 120V 60Hz 1.0 SPLIT EN50160

Phasor diagram L1 and L2 current

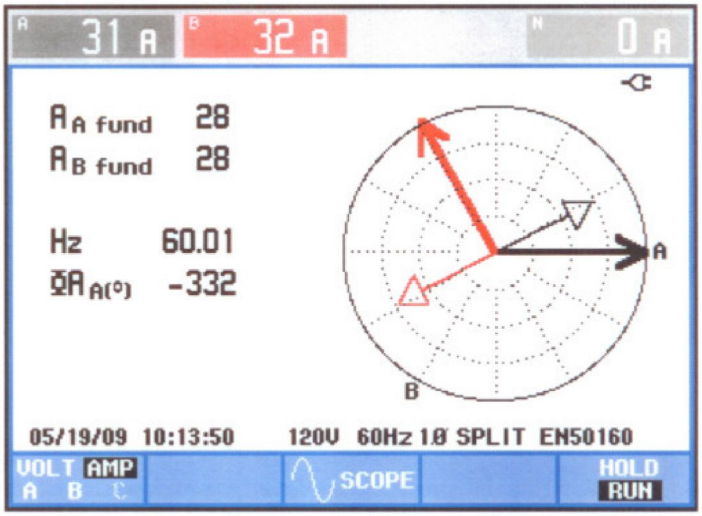

A 31 A B 32 A N 0 A

A_A fund 28
A_B fund 28

Hz 60.01
$\Phi A_{A(°)}$ -332

05/19/09 10:13:50 120V 60Hz 1.0 SPLIT EN50160

Phasor diagram B phase (L2)

Same as above, note phase angle

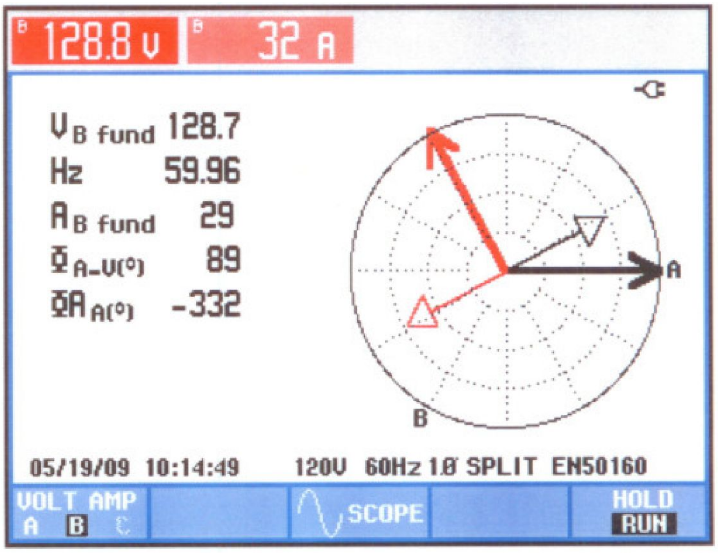

B 128.8 V B 32 A

$V_{B\ fund}$	128.7
Hz	59.96
$A_{B\ fund}$	29
$\Phi_{A-V(°)}$	89
$\Phi A_{A(°)}$	-332

05/19/09 10:14:49 120V 60Hz 1.0 SPLIT EN50160

Kilowatt hours at beginning of test

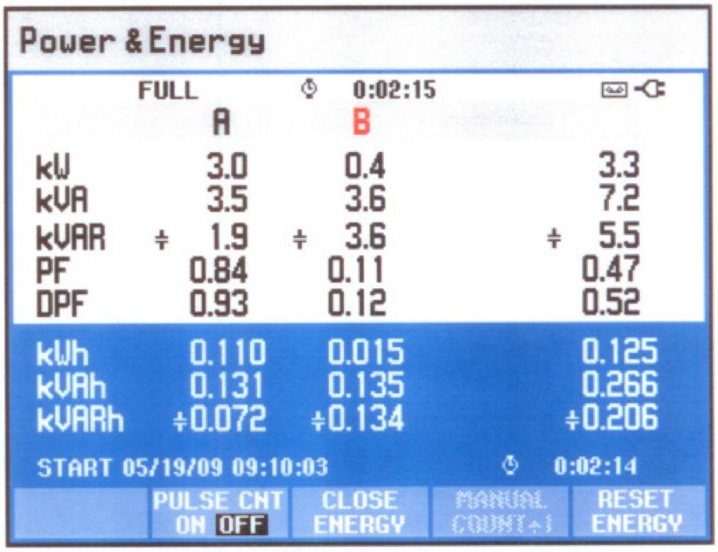

Power & Energy

FULL 0:02:15

	A	B	
kW	3.0	0.4	3.3
kVA	3.5	3.6	7.2
kVAR	÷ 1.9	÷ 3.6	÷ 5.5
PF	0.84	0.11	0.47
DPF	0.93	0.12	0.52
kWh	0.110	0.015	0.125
kVAh	0.131	0.135	0.266
kVARh	÷0.072	÷0.134	÷0.206

START 05/19/09 09:10:03 0:02:14

KWH Readings at end of test

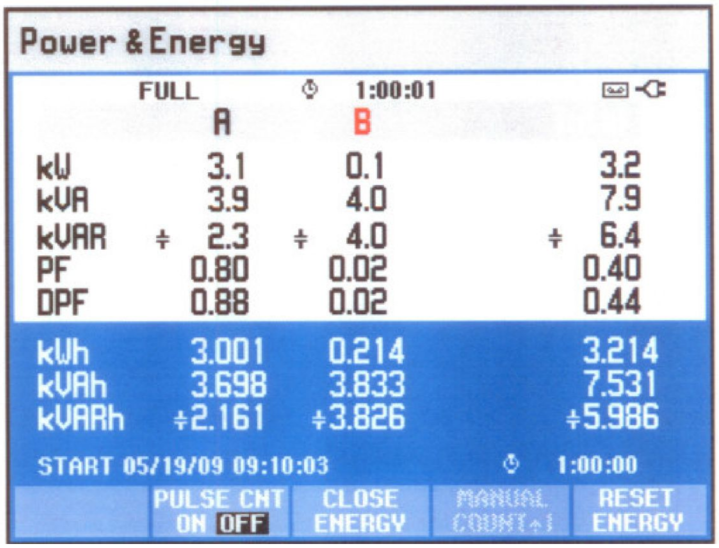

Power & Energy

FULL 1:00:01

	A	B	
kW	3.1	0.1	3.2
kVA	3.9	4.0	7.9
kVAR	÷ 2.3	÷ 4.0	÷ 6.4
PF	0.80	0.02	0.40
DPF	0.88	0.02	0.44
kWh	3.001	0.214	3.214
kVAh	3.698	3.833	7.531
kVARh	÷2.161	÷3.826	÷5.986

START 05/19/09 09:10:03 1:00:00

Meter Readings at end of test

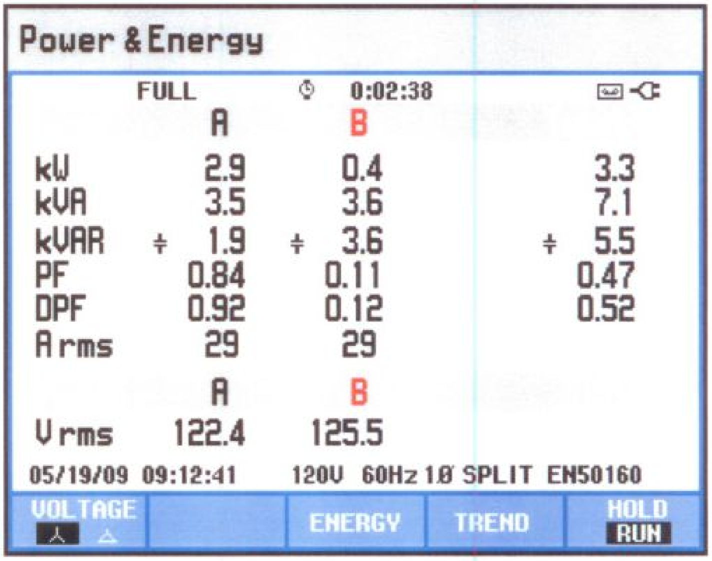

Power & Energy

FULL 0:02:38

	A	B	
kW	2.9	0.4	3.3
kVA	3.5	3.6	7.1
kVAR	÷ 1.9	÷ 3.6	÷ 5.5
PF	0.84	0.11	0.47
DPF	0.92	0.12	0.52
Arms	29	29	

	A	B
Vrms	122.4	125.5

05/19/09 09:12:41 120V 60Hz 1Ø SPLIT EN50160

Harmonic Table 32 minutes into test

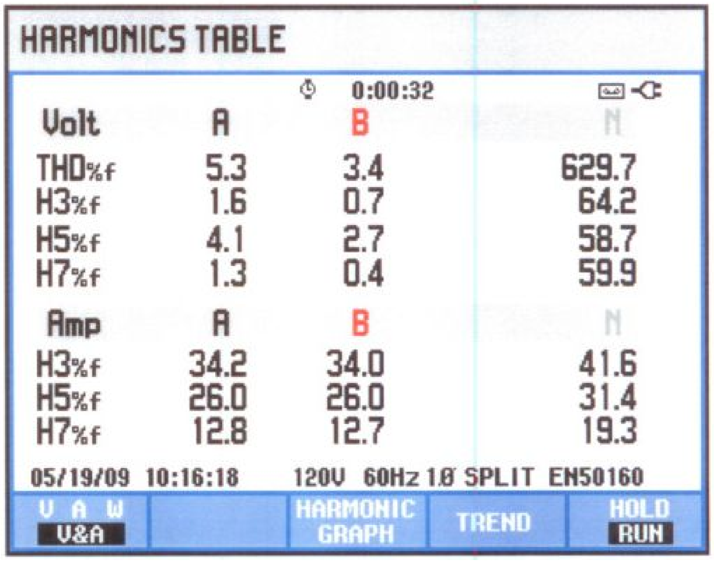

HARMONICS TABLE

0:00:32

Volt	A	B	N
THD%f	5.3	3.4	629.7
H3%f	1.6	0.7	64.2
H5%f	4.1	2.7	58.7
H7%f	1.3	0.4	59.9

Amp	A	B	N
H3%f	34.2	34.0	41.6
H5%f	26.0	26.0	31.4
H7%f	12.8	12.7	19.3

05/19/09 10:16:18 120V 60Hz 1Ø SPLIT EN50160

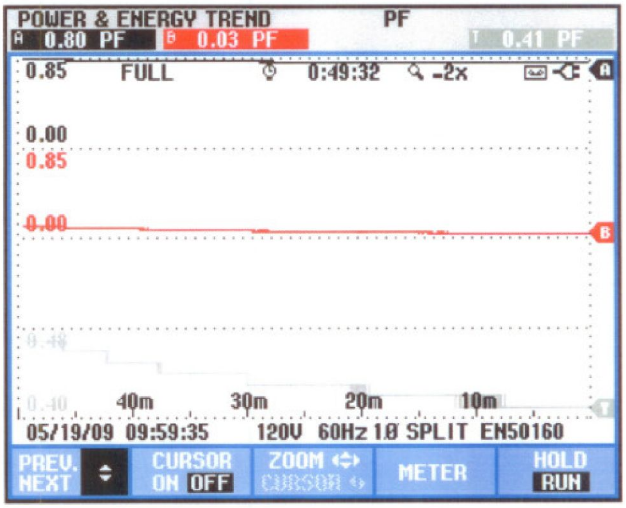

PF Trend over length of test. Note total PF change over time

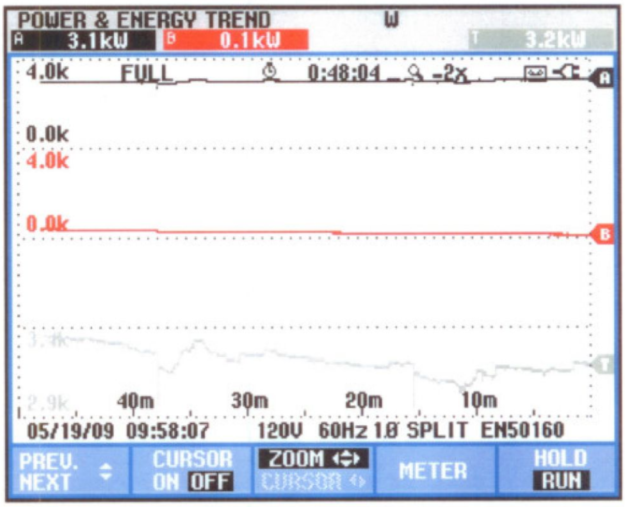

Watts trend over length of test, as expected Watts increased with time

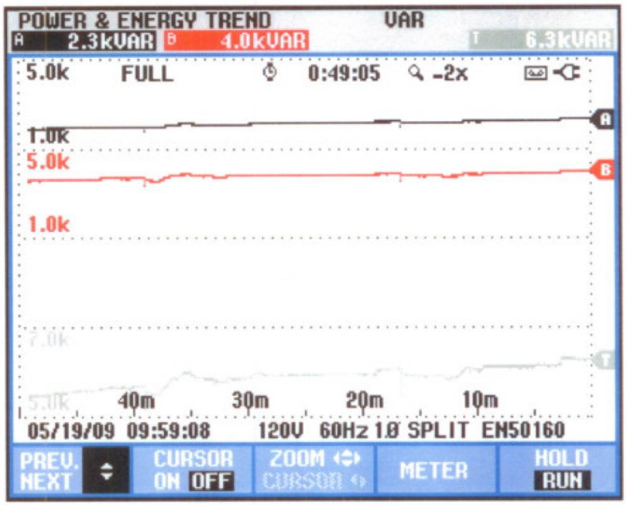

VAR trend over length of test, VAR levels decrease with time, which is a possible indication that capacitance of the cell changes with temperature.

Voltage trend over duration of test.

AC voltage will vary within +/- 15% at this location.

Variances seen are normal

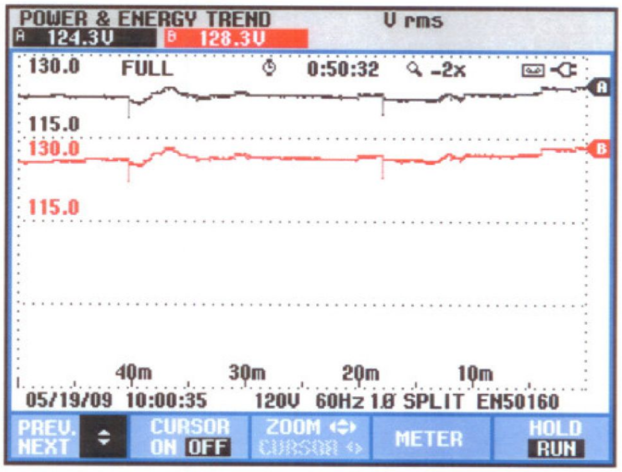

Amperage trend over duration of test.

Note that amperage reduces over time.

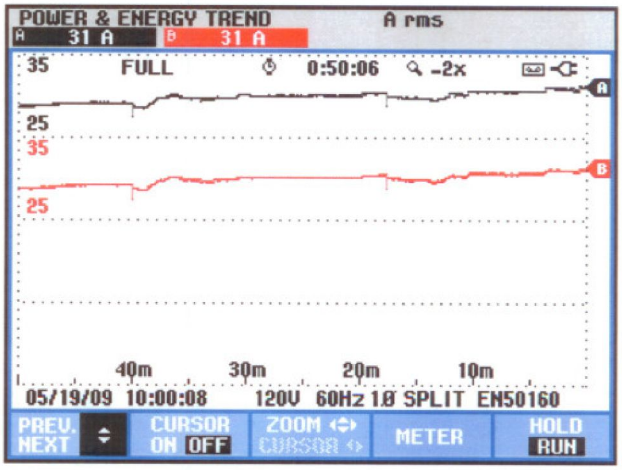

VA trend over duration of test.

As with VAR's, and PF, a decrease in value is indicated

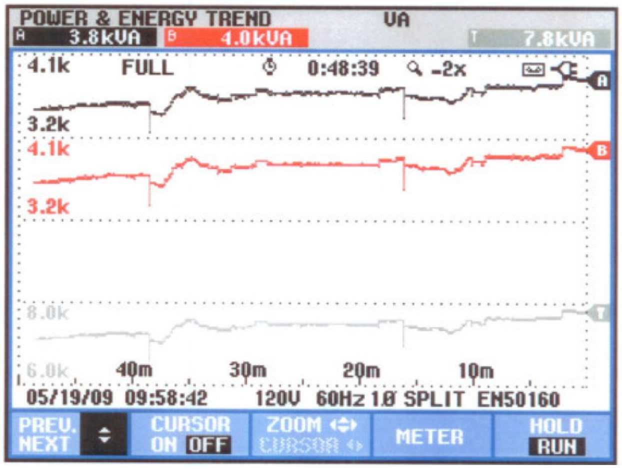

Verification of neutral voltage and current during duration of test.

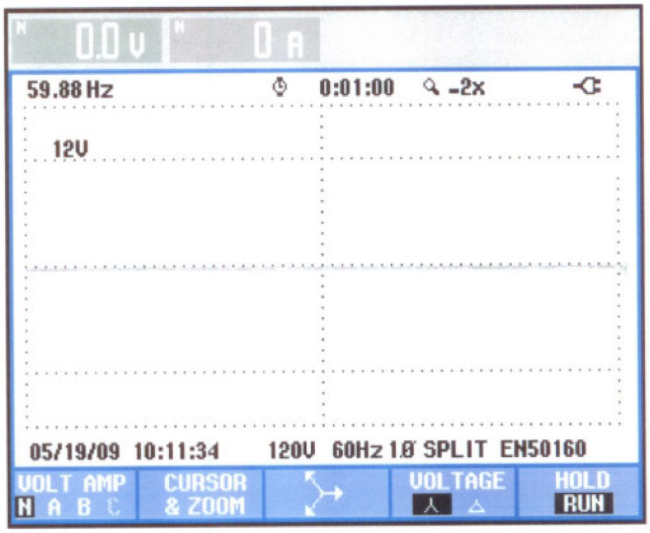

Waveform of L1 and L2 current

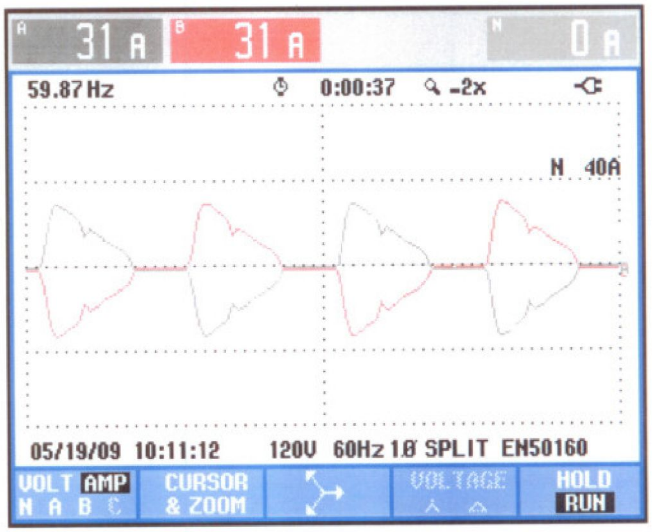

Waveform of L1 and L2 voltage

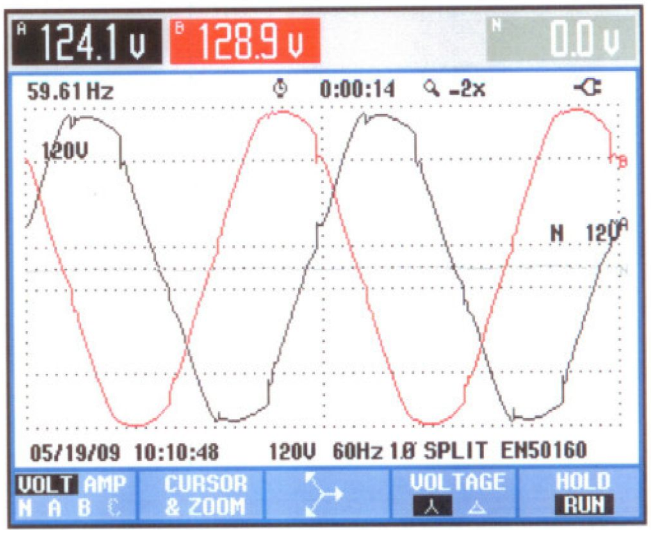

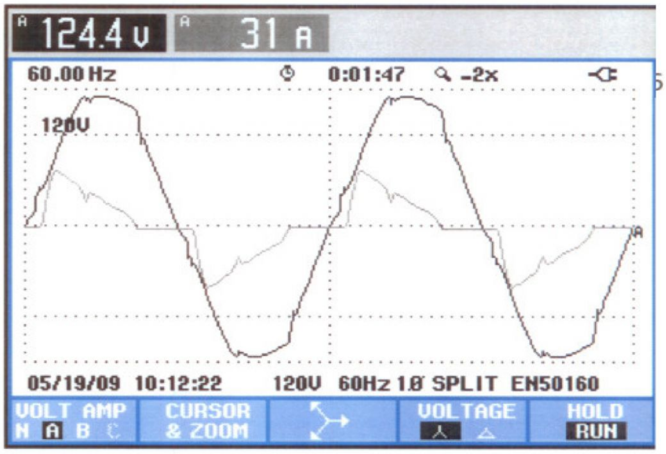

Waveform of L1 voltage and current

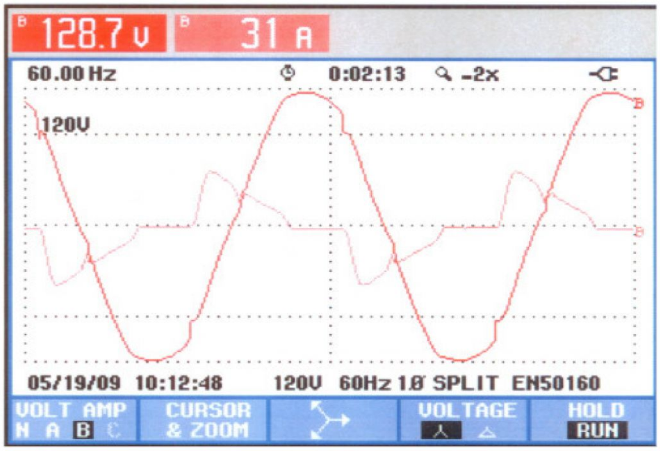

Waveform L2 voltage and current

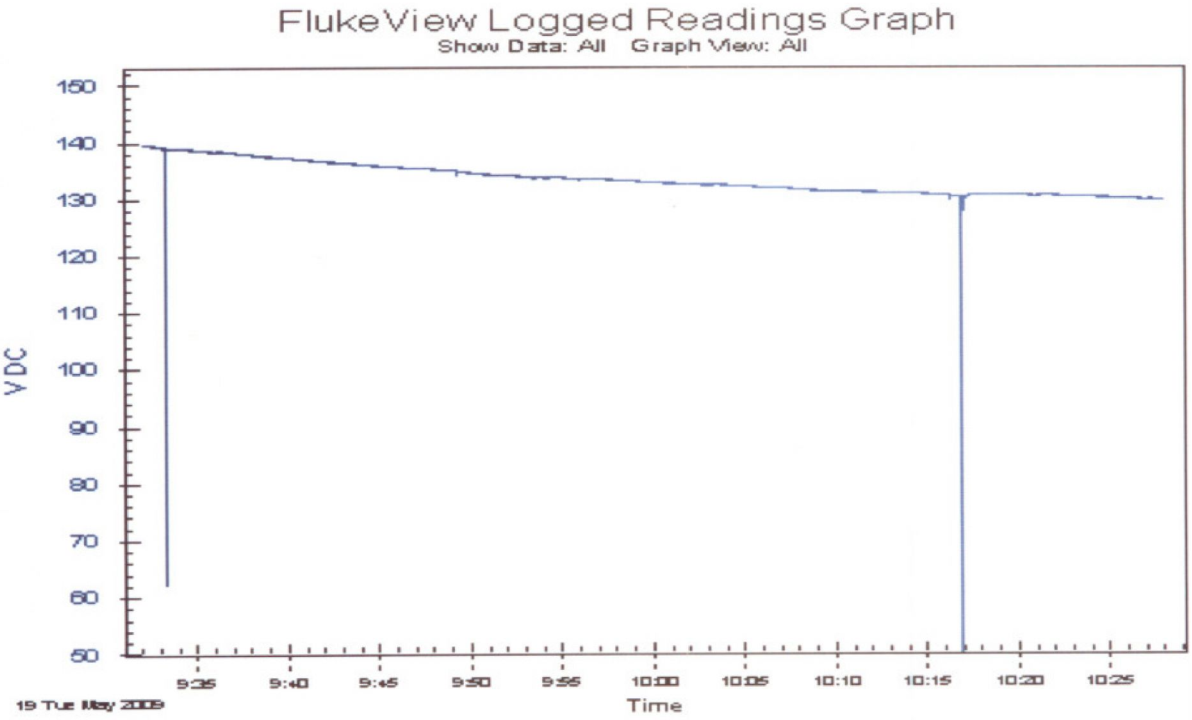

DC voltage graph during above test. Meter lead became dislodged at beginning and 10:17 and was reconnected. Voltage to cell decreased with time and temperature

Results of test:

Test 1: ER Water Torch @ 720 Liters per hour

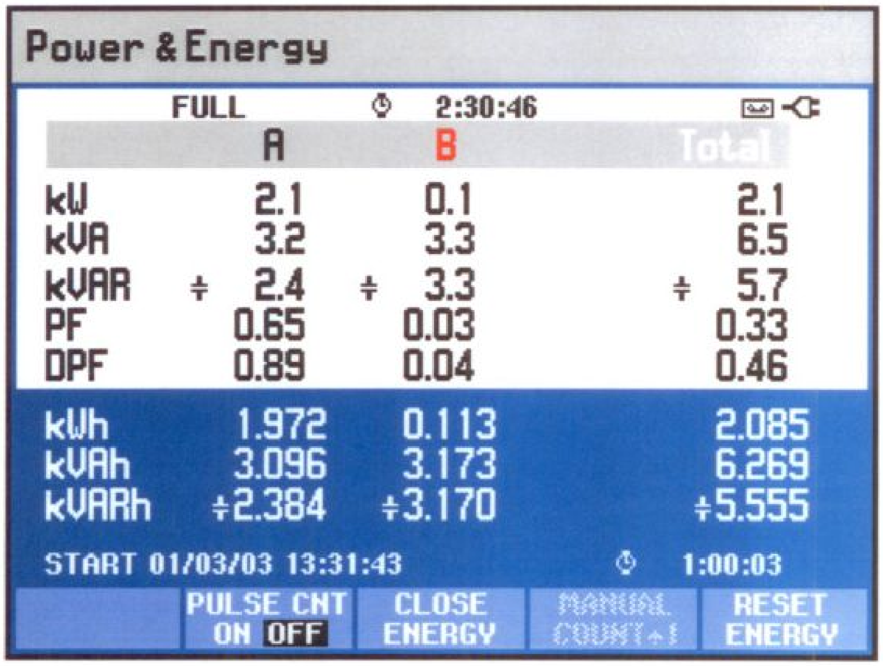

Power & Energy

FULL ⏱ 2:30:46

	A	B	Total
kW	2.1	0.1	2.1
kVA	3.2	3.3	6.5
kVAR	÷ 2.4	÷ 3.3	÷ 5.7
PF	0.65	0.03	0.33
DPF	0.89	0.04	0.46
kWh	1.972	0.113	2.085
kVAh	3.096	3.173	6.269
kVARh	÷2.384	÷3.170	÷5.555

START 01/03/03 13:31:43 ⏱ 1:00:03

Test 2: ER Water Torch @ 1600 Liters per hour

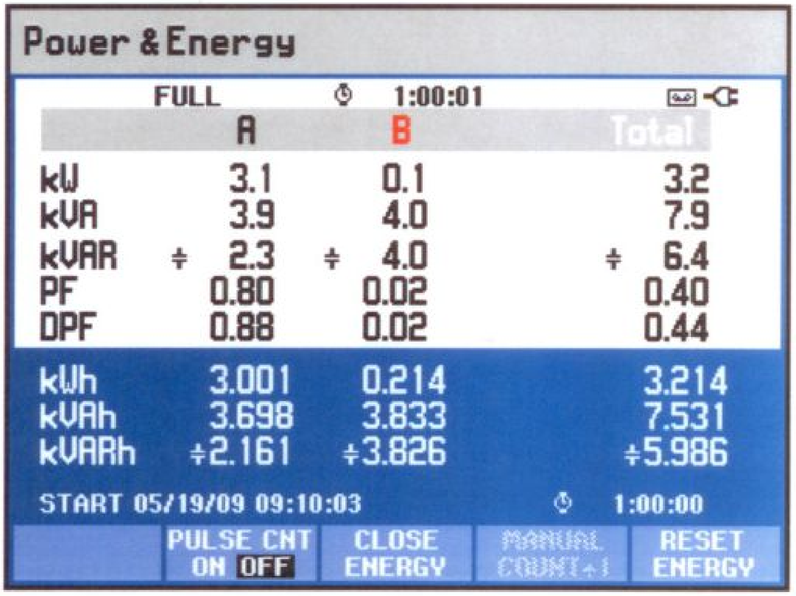

Power & Energy

FULL ⏱ 1:00:01

	A	B	Total
kW	3.1	0.1	3.2
kVA	3.9	4.0	7.9
kVAR	÷ 2.3	÷ 4.0	÷ 6.4
PF	0.80	0.02	0.40
DPF	0.88	0.02	0.44
kWh	3.001	0.214	3.214
kVAh	3.698	3.833	7.531
kVARh	÷2.161	÷3.826	÷5.986

START 05/19/09 09:10:03 ⏱ 1:00:00

Chapter 15.

PROOF: P.M. Kanarev — Free-Energy from Waterfuel

Kanarev's Lab-Tested Scientific Proof that his Invention Multiplies Energy Input 10-Fold or Even 1903-Fold[116]

Who is he?

Russian Professor Ph. M. Kanarev was quoted to say that *"Nature laws are uniform, and the person that has divided them into physical and chemical laws has lost touch between them."* I totally agree! (~Ozzie)

Free-Energy author and lecturer Jeane Manning (www.jeanemanning.ca) describes Kanarev's achievements:

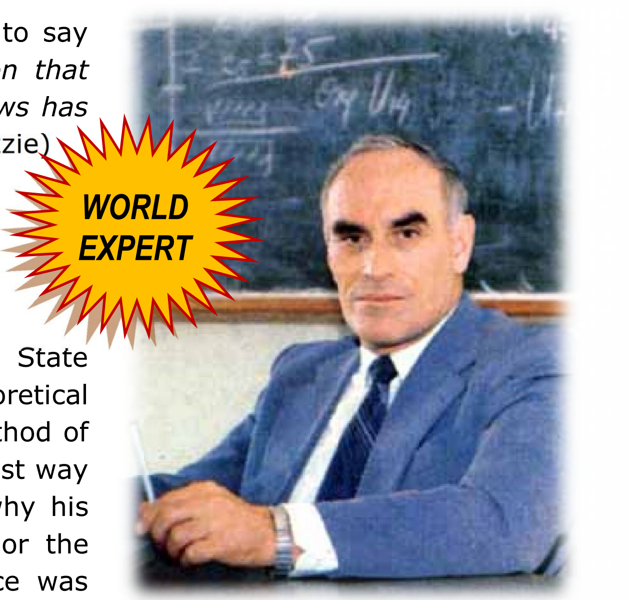

"Dr. Philipp Kanarev, chairman of Kuban State Agrarian University's department of theoretical mechanics, Krasnodar, Russia, developed a method of water plasma electrolysis that he sees as the best way to get cheap hydrogen from water. He tells why his 1987 report on it didn't reach news media nor the open literature about patents. Since his device was developed at the enterprise of the military industrial complex, his certificate of invention was stamped **FOR SERVICE USE ONLY** and its content was not published openly.

"At that time, the focus was on purifying and disinfecting water with the help of the plasma in his reactor. Two years later Drs. Stanley Pons and Martin Fleischmann announced they had excess energy output during a type of electrolysis. This renewed research efforts behind the former Iron Curtain as well as in the West. In 1996 one of Kanarev's co-authors on the 1987 certificate published results on the excess energy output from the plasma process. The next year they applied for a patent. Then a full group of Russian scientists tested the device and documented its output. Technical people can read more about Kanarev's theory in his books, such as 'Crisis of Theoretical Physics.' Results of the plasma-electrolytic experiments were predicted by the theory."

---

[116] This is not a typo! Kanarev proves, right here in this chapter, a potential energy gain as mind-boggling as 190322.6% as you will see. Yes, you're reading it right – it says one hundred and ninety **thousand** percent.

LOW CURRENT ELECTROLYSIS OF WATER

Originally Published: December 19, 2003.
Annotated by Ozzie Freedom

Interest in hydrogen energetics is increasing in recent years. It is explained by the fact that hydrogen is an inexhaustible and environmental-friendly energy carrier. But the implementation of these properties is slowed down by large energy consumption for its production from water. The most modern Electrolyzers consume 4.0 kWh per cubic meter of this gas. Electrolysis process takes place by voltage of 1.6–2.0 V and current strength of dozens and hundreds of amperes. When one cubic meter of hydrogen is burnt, 3.55 kWh of energy is released [reference 1].

Many laboratories in the world are busy solving the problem reducing energy consumption for hydrogen production from water, but there are no significant results. In the meantime, a money-saving process of decomposition of water molecules into hydrogen and oxygen exists in nature. This process takes place during ***photosynthesis***. Hydrogen atoms are separated from water molecules and are used as connecting links while forming organic molecules, and oxygen is released into the air.

A question emerges: is it possible to model an electrolytic process of water decomposition into hydrogen and oxygen, which takes place during photosynthesis? A search for an answer to this question has resulted in a simple structure of a cell (Fig. 1), in which the process takes place by a voltage of 1.5–2.0 V between the anode and the cathode and amperage of 0.02 amperes [references 1 & 2].

Fig. 1. Model of a low current cell of the electrolyzer (at the stage of patenting)

The electrodes of the cell are made of steel. It helps to avoid the phenomena that go together with the galvanic cell[117]. Nevertheless, at the cell electrodes a potential difference of nearly 0.1 V takes place in complete default[118] of electrolytic solution in it. When the solution is charged, the potential difference is increased. The positive sign of the charge always appears on the upper electrode, and the negative sign appears on the lower one. ***If the direct current source generates pulses, gas output is increased.***

Good
replication tip!
(~Ozzie)

---

[117] Galvanic cell is a chemical-to-electrical cell such as a battery that cannot be recharged.

[118] Absence.

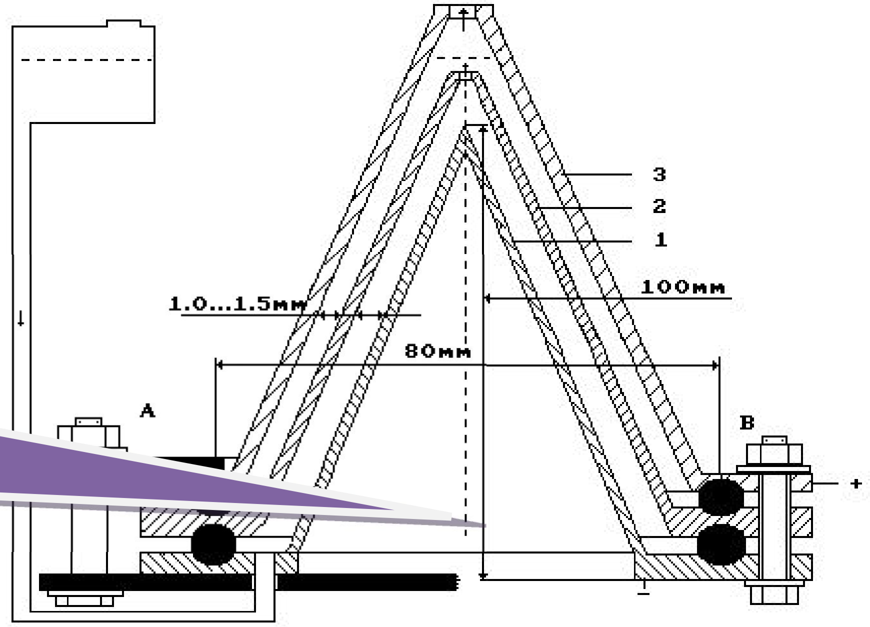

Fig. 1a. Low current electrolyzer (Patent № 2227817)

Hints to some of the missing measurements: see "Replication Tips" in Chapter 21.

(~Ozzie)

As a laboratory model of the low current electrolyzer cell generates small quantity of gases, a solution mass change definition method during the experiment and further calculation of released hydrogen and oxygen is the most reliable method of definition of their quantity.

It is known that a gram atom is equal to the atomic mass of the substance; a gram molecule is equal to the molecular mass of the substance. For example, the gram molecule of hydrogen in the water molecule is equal to two grams; the gram-atom of the oxygen atom is 16 grams. The gram molecule of water is equal to 18 grams. Hydrogen mass in a water molecule is 2x100/18=11.11%; oxygen mass is 16x100/18=88.89%; this ratio of hydrogen and oxygen is in one liter of water. It means that 111.11 grams of hydrogen and 888.89 grams of oxygen are in 1000 grams of water.

One liter of hydrogen weighs 0.09 gm; one liter of oxygen weighs 1.47 gm. It means that it is possible to produce 111.11/0.09=1234.44 liters of hydrogen and 888.89/1.47=604.69 liters of oxygen from one liter of water. It appears from this that one gram of water contains 1.23 liters of hydrogen. Energy consumption for production of 1000 liters of hydrogen is 4 kWh and for one liter 4 Wh. As it is possible to produce 1.234 liters of hydrogen from one gram of water, 1.234x4=4.94 Wh is spent for hydrogen production from one gram of water now.

Instruments and equipment used during the experiment

Special experimental low current electrolyzer (shown above); oscilloscope; voltmeter of the highest accuracy class (accuracy class of 0.2 GOST 9711-78); ammeter of the highest accuracy class (accuracy class of 0.2 GOST 9711-78); electronic scale with scale division value of 0.1 and 0.01 gm; stopwatch with scale division value of 0.1 sec.

Results of the experiment - Table 1

INDICES	AMOUNT
1 – period of service of the electrolyzer connected to the line, in six cycles t, minutes	6x10=60.0
2 – voltmeter readings V, volts	11.00
2′ – oscilloscope readings V′, volts	0.062
3 – ammeter readings I, ampere	0.020
3′ – oscilloscope readings, I′, ampere	0.01978
4 – energy consumption according to the voltmeter and ammeter (P=VxIxт/60), Wh	0.220
4′ – energy consumption according to oscilloscope readings (P′=V′xI′x т/60) Wh	0.00124
5 – period of service of the electrolyzer disconnected from the line, in six cycles, minutes	6x50=300.0
6 – solution mass change m, grams	0.60
7 – evaporating water mass m′, grams	0.06
8 – mass of water passed into gases, m″=m-m′, grams	0.54
9 – energy consumption per gram of water passed into gases according to the readings of the voltmeter and ammeter E=P/m″, Wh/gram of water	0.407
9′ – energy consumption per gram of water passed into gases according to oscilloscope readings E′=P′/m″, Wh/gram of water	0.0023
10 – existing energy consumption per gram of water passing into gases E″, Wh/gram of water	4.94
11 – *reduction of energy consumption* for hydrogen production from water according to the readings of voltmeter and ammeter K=E″/P, fold	***12.14***
11′ – reduction of energy consumption for hydrogen production from water according to the oscilloscope readings K′=E″/P′, fold	***2147.8***
12 – released hydrogen quantity ΔM=0.54x1.23x0.09=0.06, gram	0.06
13 – energy content of produced hydrogen (W=0.06x142/3.6) =2.36, Wh	2.36
14 – *energy effectiveness factor*[119] of water electrolysis process according to the readings of the voltmeter and the ammeter (Wx100/P), %	***1072.7***
14′ – *energy effectiveness factor* of water electrolysis process according to the oscilloscope readings (Wx100/P′), %	***190322.6***

Judging by the voltmeter, the process yields nearly ***11 times more energy than is put in.*** (~Ozzie)

Judging by the oscilloscope (he explains why this is the accurate one) the process yields ***1903 times more energy than is put in.*** (~Ozzie)

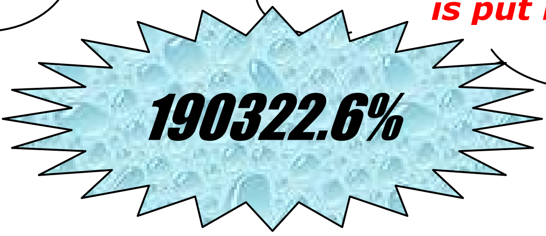

---

[119] The energy effectiveness factor (*Ee*) is defined as a dimensionless **ratio** that enables the effectiveness of the conversion of energy from the depletable resource potential form to the final use form to be expressed.

Oscillogram[120] samples

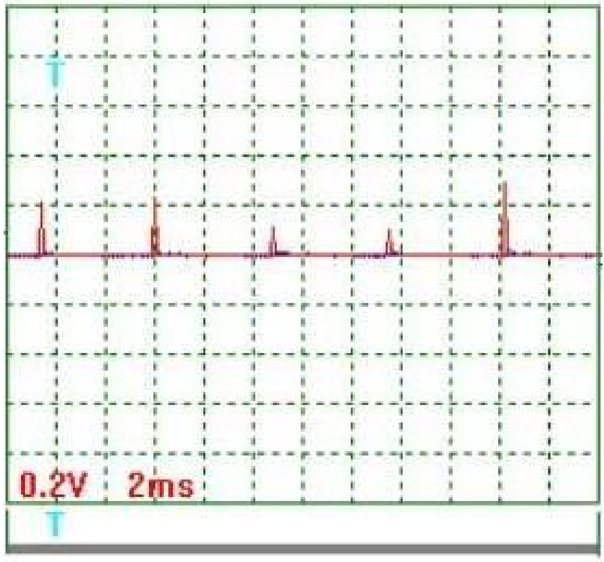

Fig. 2: Voltage

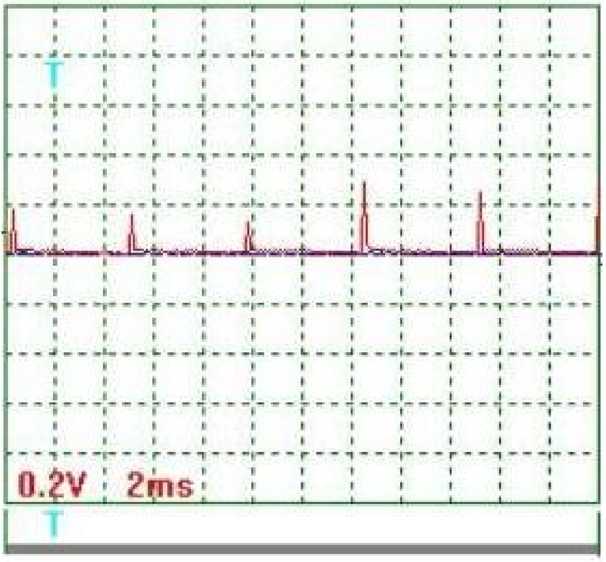

Fig. 3: Voltage

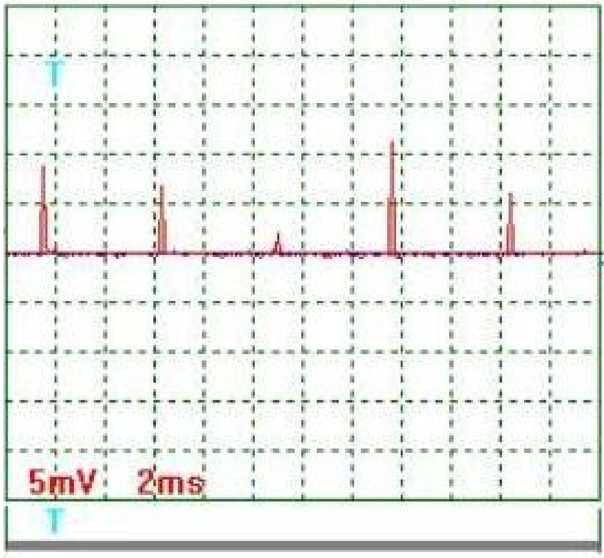

Fig. 4: Current

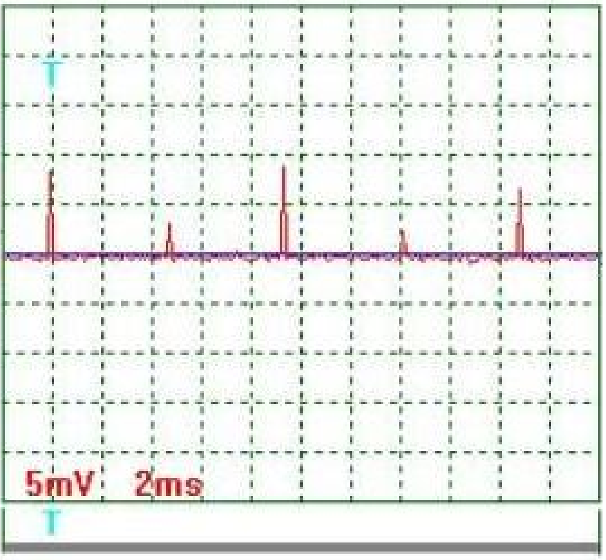

Fig. 5: Current

---

[120] Oscilloscope's screenshot.

Voltage oscillogram processing results (Figs 2 and 3)

Taking into consideration the scale factor, which is equal to 10, we'll find the mean value of voltage pulse amplitude:

U'_{cp}=[(0.20+0.24+0.12+0.10+0.30+0.18+0.16+0.12+0.30+0.24+0.30)/11] x10=2.05V

Pulse period T=(24x2)/10=4.8 ms.

Pulse duration t=(2x1.45)/10=0.29 ms.

Pulse frequency f =(1/0.001x4.8)=208.3 Hz.

Pulse period-to-pulse duration ratio S=48/0.29=16.55

Duty factor Z=0.5/16.55=0.0302

Equivalent mean component of voltage pulses calculated according to the oscilloscope readings U=2.05x0.0302=0.062 V. At that time, the voltmeter readings were 11.0 V.

Current oscillogram processing results (Figs 4 and 5). Taking into consideration the scale factor, which is equal to 10, and resistance of 0.1 Ohm resistor we'll find a mean value of current pulse amplitude:

I'_{cp}={[(9.0+7.0+2.0+11.5 +6.0+8.5+3.5+9.0+2.5+6.5)/10]x10}/0.1=655мА =0.655A

Mean current in the electrolyzer supply circuit is I_{cp} =0.655x0.0302=0.01978A =0.02A. The ammeter readings are 0.02 A.

A question emerges at once: why is it that current values according to the readings of the ammeter and oscilloscope are the same, but voltage value according to the oscilloscope reading is 177.4-fold less than according to the voltmeter reading? A series of additional experiments accompanying this question shows that a low current electrolyzer cell is a capacitor being discharged gradually under the influence of electrolytic processes, which take place in it. The value of this discharge is compensated by the pulses of voltage, which mean value is considerably less than the constant value of the charge voltage of this capacitor.

Thus, the voltmeter shows a capacitor charge voltage value, and ***the oscilloscope shows a value of its recharge***, which characterizes the energy consumed by the cell from the line. It appears from this that in order to calculate energy consumed by the low current electrolyzer cell from the line it is necessary to use voltage, which is registered not by the voltmeter, but by the oscilloscope. As a result, energy consumption for hydrogen production from water in case of low current electrolysis is reduced not 12-fold, but almost ***2000-fold.***

Thus, a small value of current 0.02 A and voltage 0.062 V allows us to suppose that in the low current electrolyzer the water electrolysis process is similar to the process, which takes place during photosynthesis. At photosynthesis, hydrogen separated from the water molecule is used as a connecting link during organic molecule formation, and oxygen is released into the air. At low current electrolysis, both hydrogen and oxygen are released into the air.

Fruitfulness of this attractive hypothesis should be checked not once, but now it is the only one that gives a satisfactory explanation of an unusual experimental result.

Note: Gas release is clearly seen during several hours after the cell is disconnected from the line.

Conclusion

Energy efficiency index of the low current electrolysis should be refined, but in any case it will be ***greater than 10***, that's why there is every reason to think that a way to production of inexpensive hydrogen from water and transition to hydrogen energetics is opened.

References and further study

1. Kanarev Ph.M. – The Foundation of Physchemistry of Microworld; 3rd edition. – Krasnodar: KSAU, 2003.
   www.guns.connect.fi/innoplaza/energy/story/Kanarev/book/index.html
   and
   www.guns.connect.fi/innoplaza/energy/story/Kanarev/
2. Order Kanarev's books:
   www.guns.connect.fi/innoplaza/energy/story/Kanarev/index.html#books

Contact

Ph. M. Kanarev

The Kuban State Agrarian University

13 Kalinin Street, 350044 Krasnodar, Russia

E-mail: kanphil@mail.ru
kanphil@mail.kuban.ru
kanarevfm@mail.ru

University website: https://kubsu.ru/en/

Chapter 16.

PROOF: LeClair & Griggs — Free-Energy from Water Cavitation

Note: **HEATING also with BROWN'S GAS perChapter 16 above Chapter 22 below.**

> ***"Cavitation could be to the 21st Century what Electricity was to the last century. The new prime mover."***
> ***~Mark L. LeClair, CEO of NanoSpire, Inc.***

Is it true that water doesn't even have to explode/combust to give out Free-Energy?

Sources: LeClair's https://nanospireinc.com and others

The newest, and I think the most exotic application of water-to-energy is the use of a phenomenon called Water Cavitation. The special aspects of this technology are:

(a) There is no fire, explosion or combustible gas involved,
(b) It is the newest kid on the block (as far as I know), and
(c) NOW THERE IS PROOF that it does indeed extract Free-Energy out of thin air.

What is Water Cavitation

Refer to the drawing. Cavitation is the formation of vapor cavities in a liquid. Cavities are small zones without liquid that can be only be defined as "bubbles" or "voids" (see item 1) Cavities are created by **natural forces** acting upon the liquid.

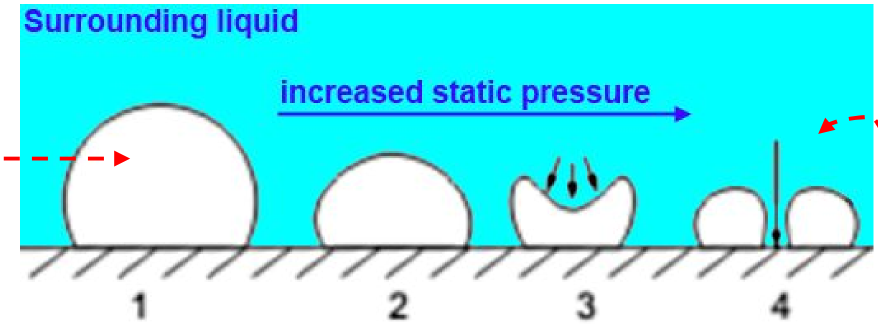

It usually occurs when a liquid is subjected to rapid changes of pressure (e.g. boat propeller) OR WHEN A LIQUID IS BROUGHT TO ITS BOILING POINT. This phenomenon causes the formation of cavities where the pressure is relatively low. When subjected to higher pressure, these voids **implode** (items 2-3 in the drawing) thus generating an intense shockwave ("reentrant jet" – item 4) that acts upon the adjacent surface.

This photo [from a NanoSpire presentation] shows a rare view of the moment of implosion. Some readers would recognize the toroidal shape that is said to be the basic structure of the universe and many phenomena in it. Cavitaion usually causes various wear and tear ***if left uncontrolled***. However, if properly channeled, the energy of the cavitation implosion can be harnessed to do useful work.

An Abridged History of Water Cavitation

In 1985 **James L. Griggs** began developing his "Hydrosonic Pump" in which the rotation of a metal rotor with holes creates hot water or steam nearly instantaneously, producing 30%-70% more energy than was put into the system. In 1993 he was granted a US Patent № 5,188,090 for his apparatus that heats water using Water Cavitation. His company, Hydro Dynamics now offers related products at www.HydroDynamics.com

The images seem to be from William Woollard's 1995 documentary "It Runs on Water"

I've seen East-European companies claiming similar systems ready to sell. But I haven't found credible tests to any of the above. An American company, however, have come up with well-built products and independent lab tests to prove their workability with exact numbers. Since 1989, Mark LeClair and NanoSpire (co-founded by LeClair and Serge Lebid) have been presenting their knowledge and technology in front of the scientific world, in print, on TV and in live presentations: https://nanospireinc.com/NanoSpire_Presentations.html

At www.guns.connect.fi/innoplaza/energy/story/Kanarev/water/index.html renowned physicist Prof. Kanarev reports about the Russian market and also explains the principle:

> ***"In the Russian market, three firms (Yusmar, Termovikhr and Noteka) sell cavitation water heating equipment with energy efficiency index of 150%. Soon, an air heating device with the same efficiency will be produced. The processes of mechanical destruction of covalent bonds of the air gas molecules, molecules and clusters of water and their further fusion serve as a source of additional energy generated by these devices."***

As reported on KeelyNet, in March 2007 Mark LeClair built and tested the first '***water cavitation reactor***' powered by the LeClair Effect. The 1.25" ID by 12" long reactor produced 2.9 kW of hot water using only 840 watts of input, a coefficient of performance (COP) of 3.4 times more energy out than was put in. Per the report, ***twelve experiments were performed with 100% repeatability*** in various configurations.

References:

- On February 10, 2012 the NanoSpire company published a Press release titled "NanoSpire, Inc. Successfully Harnesses Cavitation Zero Point Energy to Produce Dramatic Levels of Fusion & Transmutation In Water": www.1888pressrelease.com/nanospire-inc-successfully-harnesses-cavitation-zero-point-pr-372884.html

- ***The history of Water Cavitation:*** http://research.ncl.ac.uk/cavitation/cavitation_history.htm

- NanoSpire's competitive advantages explained and listed: https://nanospireinc.com/Competitive_Advantages.html

Water Cavitation Technology of Mark LeClair

LeClair holds multiple US Patents on this technology (also listed in Chapter 20 below):

- US Patent № 5,522,553 (granted 1996) "Method and Apparatus for Producing Liquid Suspensions of Finely Divided Matter"

- US Patent № 6,932,914 (granted 2005) "Method and Apparatus for the Controlled Formation of Cavitation Bubbles Using Target Bubbles"

- US Patent № 6,960,307 (granted 2005) "Method and Apparatus for the Controlled Formation of Cavitation Bubbles"

- US Patent № 7,297,288 (granted 2007) "Method and Apparatus for the Controlled Formation of Cavitation Bubbles Using Target Bubbles"

- US Patent № 7,517,430 (granted 2009) "Method and Apparatus for the Controlled Formation of Cavitation Bubbles".

Cavitation Collapse Sequence – from a NanoSpire presentation:

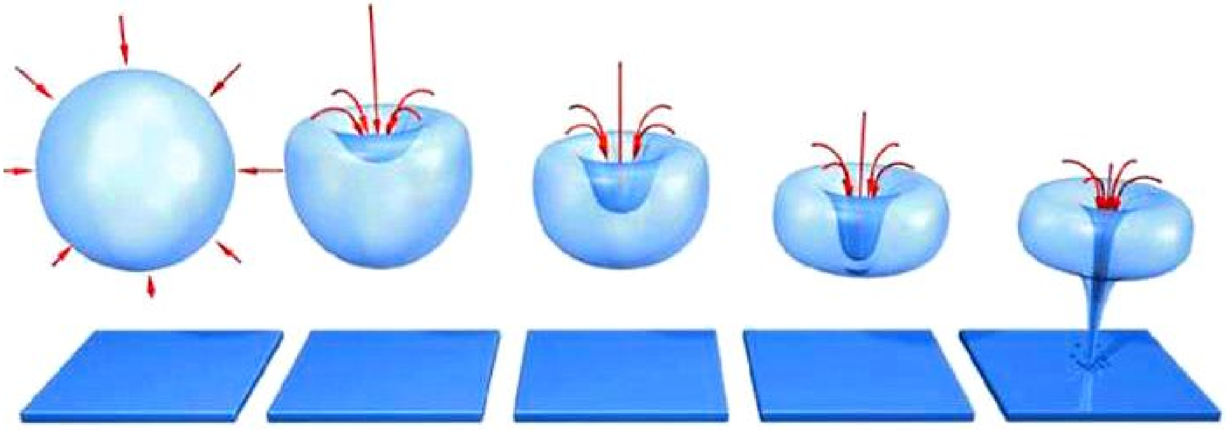

Cavitation Collapse Sequence - US Patents 7,517,430 & 6,960,307, Method and Apparatus for the Controlled Formation of Cavitation Bubbles, by M. L. LeClair

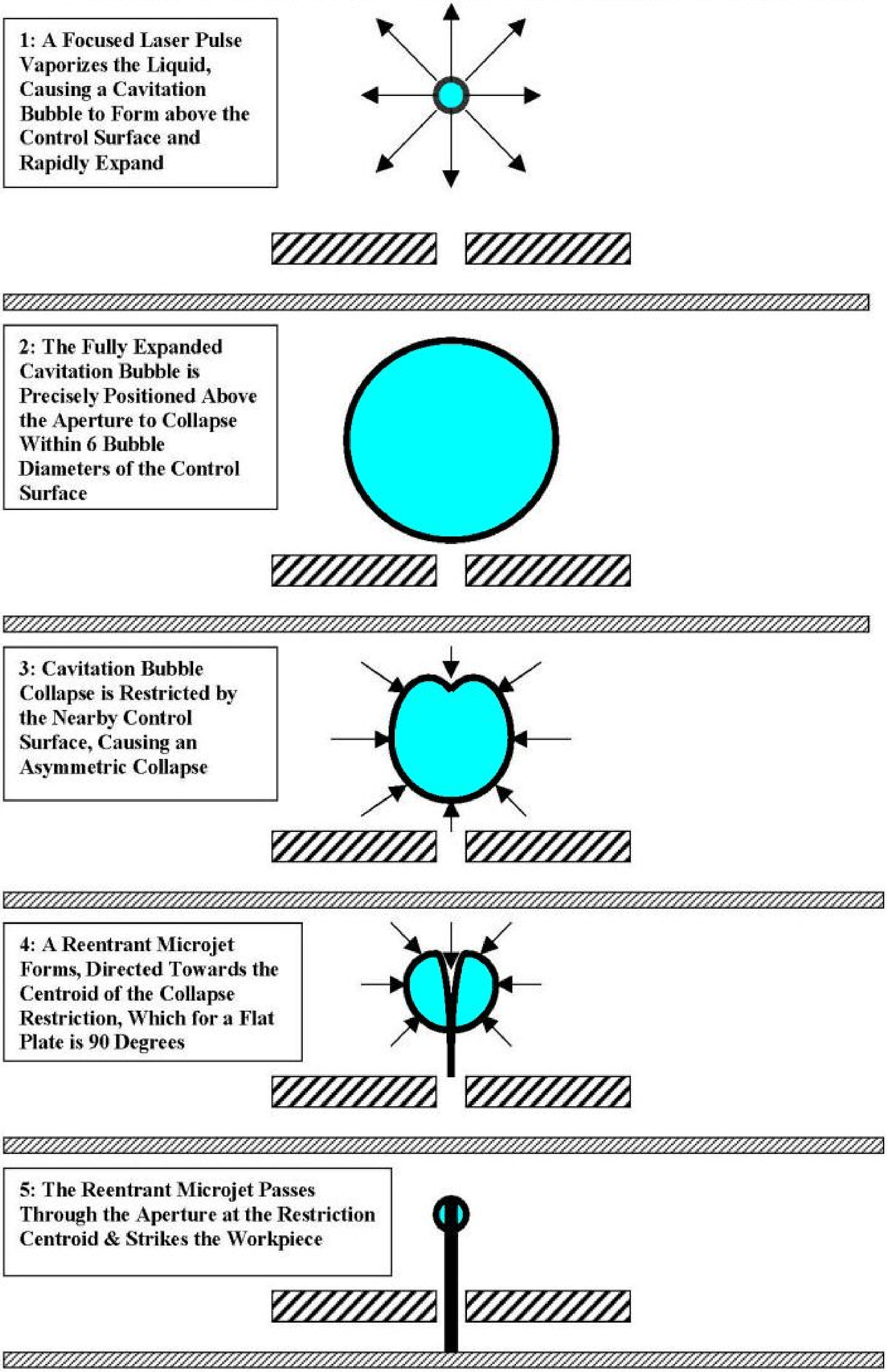

1: A Focused Laser Pulse Vaporizes the Liquid, Causing a Cavitation Bubble to Form above the Control Surface and Rapidly Expand

2: The Fully Expanded Cavitation Bubble is Precisely Positioned Above the Aperture to Collapse Within 6 Bubble Diameters of the Control Surface

3: Cavitation Bubble Collapse is Restricted by the Nearby Control Surface, Causing an Asymmetric Collapse

4: A Reentrant Microjet Forms, Directed Towards the Centroid of the Collapse Restriction, Which for a Flat Plate is 90 Degrees

5: The Reentrant Microjet Passes Through the Aperture at the Restriction Centroid & Strikes the Workpiece

Cavitation Collapse Sequence - US Patents 7,297,288 & 6,932,914 "Method and Apparatus for the Controlled Formation of Cavitation Bubbles Using Target Bubbles" by M.L. LeClair

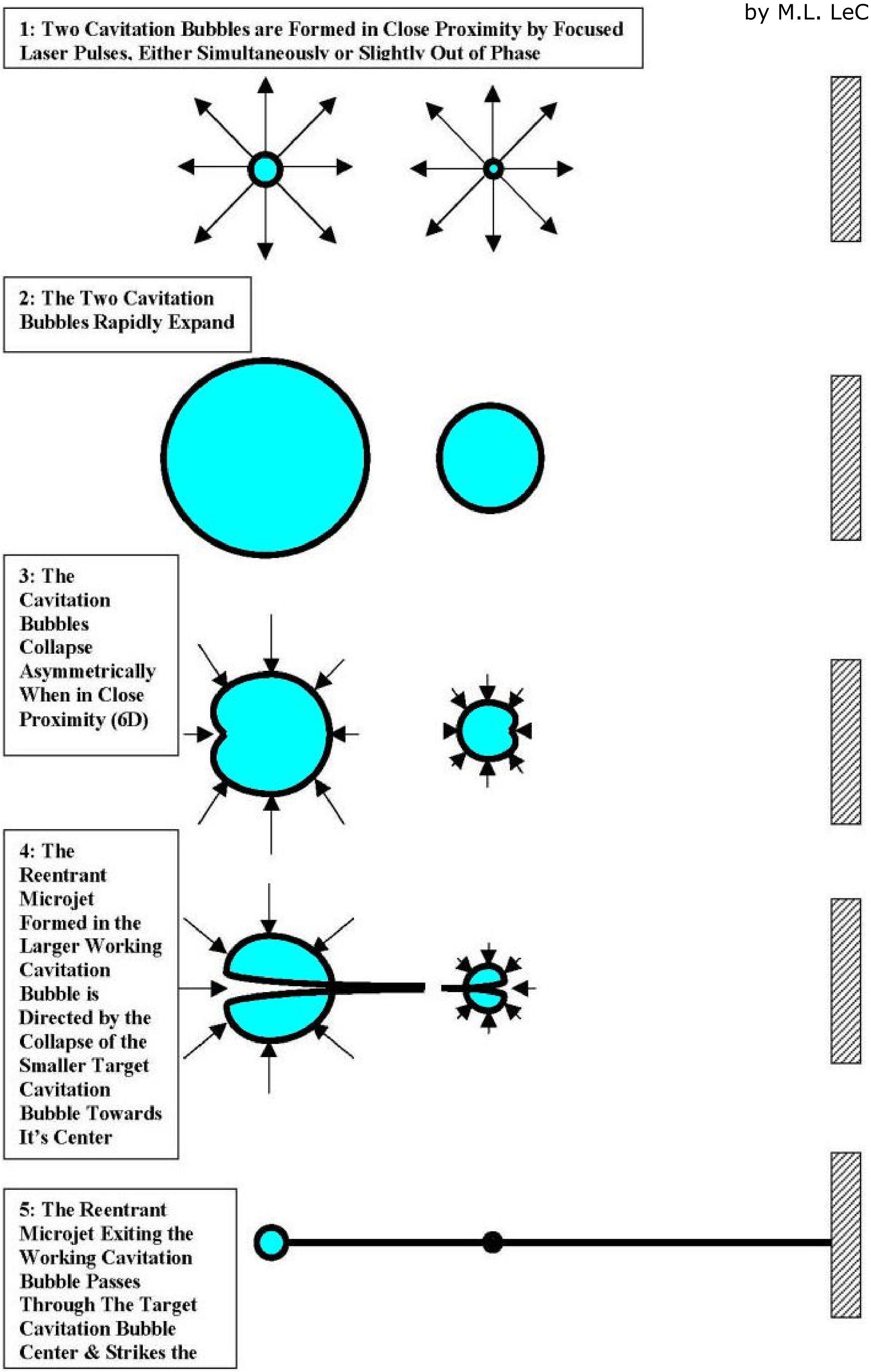

1: Two Cavitation Bubbles are Formed in Close Proximity by Focused Laser Pulses, Either Simultaneously or Slightly Out of Phase

2: The Two Cavitation Bubbles Rapidly Expand

3: The Cavitation Bubbles Collapse Asymmetrically When in Close Proximity (6D)

4: The Reentrant Microjet Formed in the Larger Working Cavitation Bubble is Directed by the Collapse of the Smaller Target Cavitation Bubble Towards It's Center

5: The Reentrant Microjet Exiting the Working Cavitation Bubble Passes Through The Target Cavitation Bubble Center & Strikes the

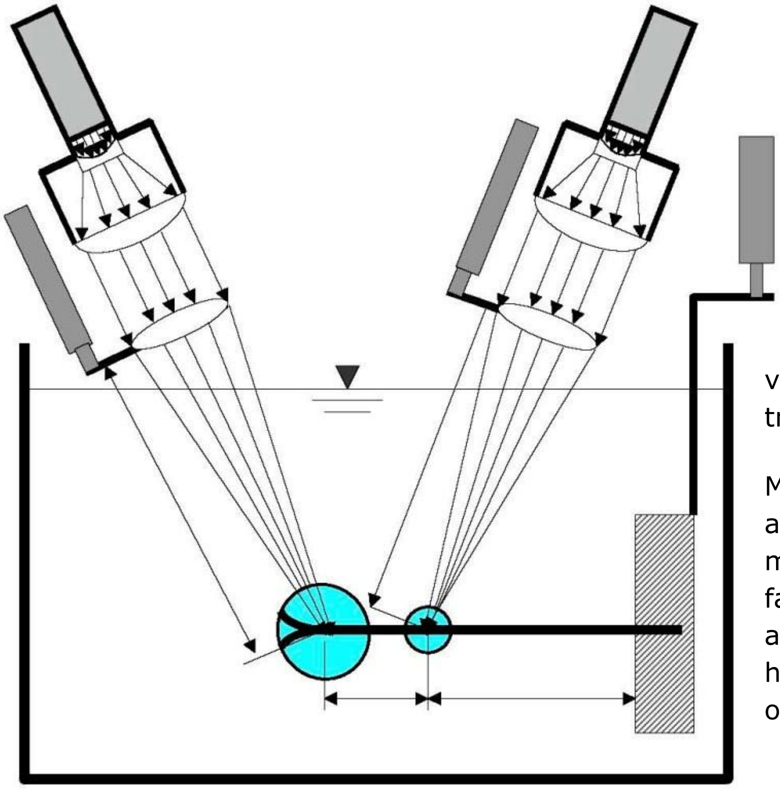

Image: from US Patent № 7,297,288

The cavitation "reentrant jet" exits the bubble at up to **Mach 4** and can drill a hole as small as a few nanometers through diamond! This behavior is very repeatable. In one embodiment of this invention, a laser, ultrasound or other energy source is used to create small high-energy vapor bubbles through phase transition.

Multiple controlled bubbles are also possible allowing lines to be machined as well as other form factors and machining applications. Cavitation allows a high aspect ratio machining to be obtained.

NanoSpire provides machine tools that use this principle of water cavitation microjets, which are capable of cutting, drilling, welding, hammering, and annealing (nano heat-treatment) of materials only a few nanometers in size.

The Proof

The company introduced properly measured and documented evidence of their ability to produce Free-Energy from Water Cavitation. The following temperature graph provides the science-lab proof for 341% energy gain (840 Watts invested for the 2,866 Watts output). ***That's 241% of Free-Energy!***

> ***Whether this process will ever power whole cities is hard to predict, but now there's irrefutable proof that WATER CAVITATION does have a promising economic potential.***
> ***(~Ozzie)***

For more scientific data contact:

Mark L. LeClair, CEO.
Phone (207) 929-6226
mleclair@nanospireinc.com

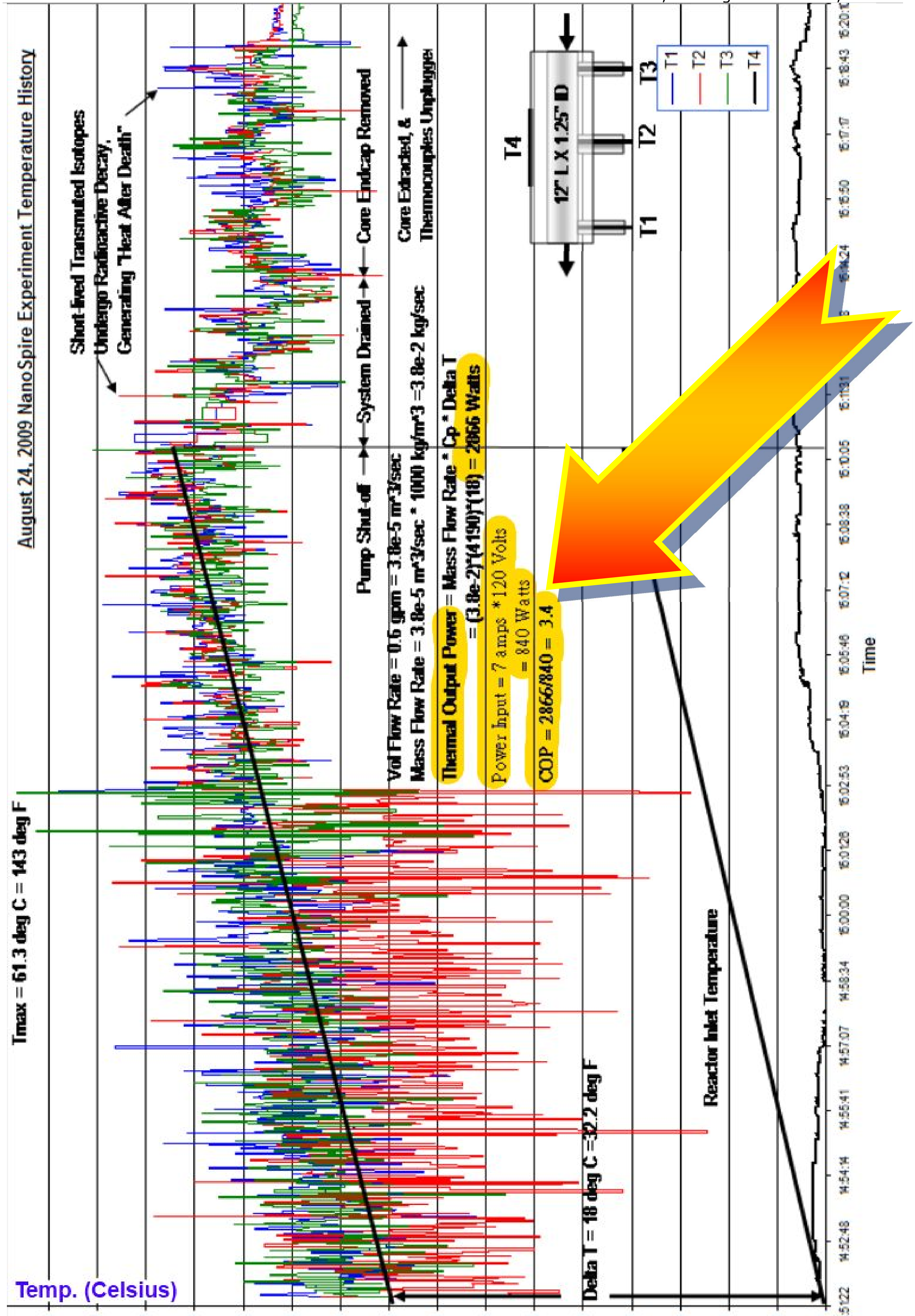
August 24, 2009 NanoSpire Experiment Temperature History
Tmax = 61.3 deg C = 143 deg F
Delta T = 18 deg C = 32.2 deg F
Reactor Inlet Temperature
Short-lived Transmuted Isotopes Undergo Radioactive Decay, Generating "Heat After Death"
Pump Shut-off → ← System Drained → ← Core Endcap Removed
Core Extracted, & Thermocouples Unplugged →
Vol Flow Rate = 0.6 gpm = 3.8e-5 m^3/sec
Mass Flow Rate = 3.8e-5 m^3/sec * 1000 kg/m^3 = 3.8e-2 kg/sec
Thermal Output Power = Mass Flow Rate * Cp * Delta T = (3.8e-2)*(4190)*(18) = 2866 Watts
Power Input = 7 amps * 120 Volts = 840 Watts
COP = 2866/840 = 3.4
T4
12" L X 1.25" ID
T1
T2
T3
T1
T2
T3
T4
Temp. (Celsius)
60
58
56
54
52
50
48
46
44
42
40
38
36
34
32
30
28
Time
14:51:22
14:52:48
14:54:14
14:55:41
14:57:07
14:58:34
15:00:00
15:01:26
15:02:53
15:04:19
15:05:46
15:07:12
15:08:38
15:10:05
15:11:31
15:14:24
15:15:50
15:17:17
15:18:43
15:20:10

Moray King presents detailed theory on: Water Cavitation + Water Electrolyzer = FREE ENERGY from the Vacuum

- Movie Title: "One Million Cavitating Water Electrolyzers"
- Speaker: Moray B. King
- Run time: 1:26 hr
- Watch at: https://vimeo.com/58005057

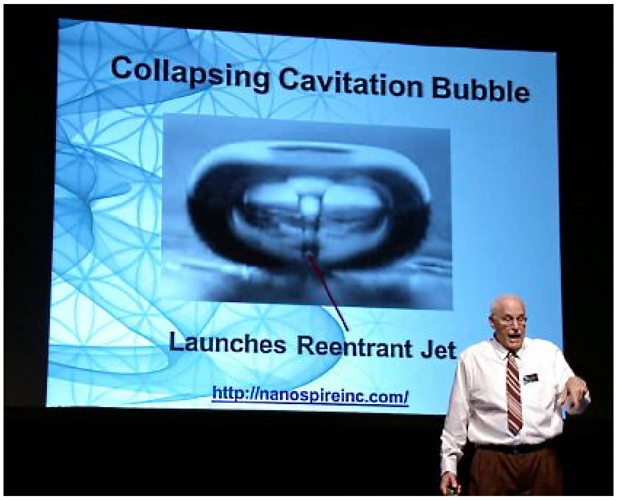

Moray B. King at the Breakthrough energy Movement conference, 2012, Holland [source: Vimeo.com]

Moray B. King is known internationally as a physicist, author and expert speaker on the subjects of Zero-Point Energy (ZPE), quantum physics and Tesla technology. He is the author of three books on these subjects, which are all available at www.Amazon.com:

- Tapping the Zero-Point Energy
- Quest for Zero-Point Energy
- The Energy Machine Of T. Henry Moray.

More details on how cavitation links to extracting energy from water, see Chapter 12.

'Sonofusion' by Flynn, Stringham, George et. al

Roger Stringham of *First Gate Energies* (Hawaii) as well as Russ George and others have demonstrated and measured satisfactory results of extracting excess energy from Sonofusion – the phenomena of fusion in water bubble cavitation. Or, as Purdue University scientists described it, an inexpensive "tabletop" device that uses sound waves to produce nuclear fusion reactions. Hugh Flynn seems to have preceded all of them, see US Patent # 4,333,796 in Chapter 20.

References for further study:

- Stringham's website http://sonofusionjets.com/ and his paper "Cavitation and Fusion" presented at the 10th International Conference on Cold Fusion, 2003 www.lenr-canr.org/acrobat/StringhamRcavitationb.pdf -- great info!
- Purdue University validation of sonofusion, from July 2005: www.purdue.edu/uns/html4ever/2005/050712.Xu.fusion.html
- Again, for hand-on experience and for today's actual water cavitation technology, I believe your best contact is Mark L. LeClair of NanoSpire, Inc. https://nanospireinc.com

James L. Griggs' Water Cavitation Heater Patents

- 1995 – US Patent № US5385298 "Apparatus for heating fluids"
- 2012 – US Patent App. № 20120291765-A1 "Apparatus for heating fluids" also published with same title as worldwide № WO2012159033A1
- 2015 – European Patent App. № EP2918945A1 "Method and apparatus for heating liquids"
- 2000 – Validation and tech boost from **NASA, Marshall Space Flight Center**: http://hdl.handle.net/hdl:2060/20020066442
- Products based on Griggs' know-how: http://HydroDynamics.com

Excerpts from Griggs' Patents (continued next page): ...rotor featuring channels disposed around its circumference and around the interior circumference of the rotor housing specifically to induce cavitation. The channels are shaped to control the size, oscillation, composition, duration, and implosion of the cavitation bubbles. The rotor is attached to a shaft which is driven by external power means. Fluid pumped into the device is subjected to the relative motion between the rotor and the device housing, and exits the device at increased temperature. The device is thermodynamically highly efficient, despite the structural and mechanical simplicity of the apparatus. Such devices accordingly provide efficient, simple, inexpensive, and reliable sources of distilled potable water for residential, commercial, and industrial use, as well as the separation and evaporation of other liquids.

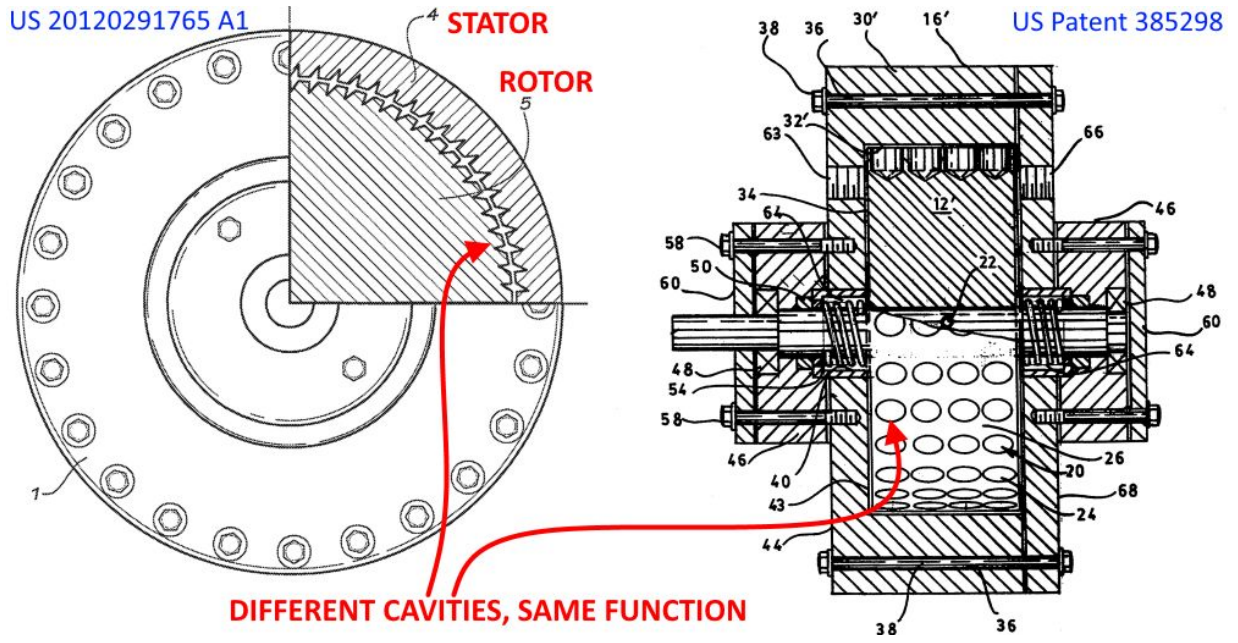

DIFFERENT CAVITIES, SAME FUNCTION

Cavitation-induced heating has a number of advantages in heating fluids. In the petroleum industry, cavitation-induced heating allows petroleum products to be heated directly in storage tanks in the field, on pipelines, or on barges to facilitate pumping and unloading in cold weather, and heavy oil products could be heated for processing without heat exchanger scaling. --- In dairy production, cavitation-induced heating results in reduced maintenance, since pasteurization would occur without direct contact between the milk and a heat exchanger surface. This is particularly beneficial in the pasteurization of high fat dairy products. Cavitation-induced heating has also shown promising ability in generating relatively high concentrations (up to 40%) of hydrogen peroxide (H_2O_2) from tap water. A potential medical application… destroys pathogens though cavitation-induced heating of blood or other bodily fluids.

One of the most popular current applications, however, is use of cavitation-induced heating to purify polluted water through distillation. Cavitation-induced heating systems have been used in purifying glycol-tainted water used in airport de-icing operations. --- A block diagram of a typical system is shown, in which a self-contained, easily movable 40-foot trailer houses the cavitation generators, motors, and other components.

Another potential application of cavitation-induced heating is purification of seawater. Current sea water distilling technology typically uses electricity to generate heat. However, energy is lost generating steam to produce the electricity, and additional energy is lost in transmitting electricity to the desalinization plant. However, using cavitation-induced heating would be extremely efficient in converting seawater into steam. As the steam is condensed back across a low pressure-condensing generator, both potable water and electricity could be produced.

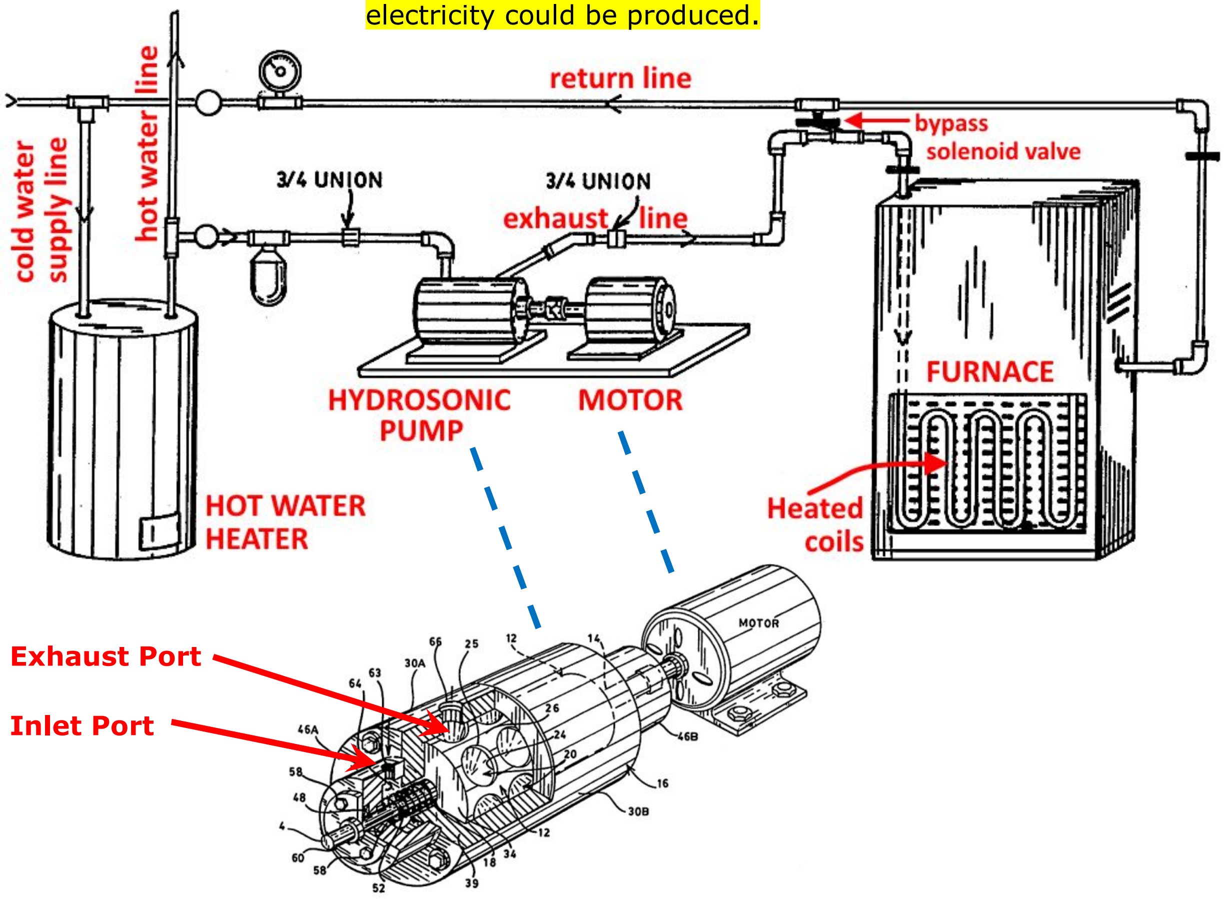

Chapter 17.

PROOF: Exploding Water Gives Out Free-Energy

Is it True that Water Can Be ***EXPLODED*** with Very Simple Devices and Simple Engines?

Many experimenters and investigators are fascinated by the idea of producing hydrogen from water, often using the extra oxygen as a helpful oxidant. Or using vapor, or mixing water and oil. You see the many methods described throughout this book. And I agree, these are good directions. However, water can explode DIRECTLY when ignited by high voltage – and this method is so simple that it can be done with low-cost circuits.

The circuit below was designed by *Ossie Callanan* and published by Panacea University: http://freenrg.info/Water_Power/Picts_And_Html/Water%20Spark%20Plug.pdf

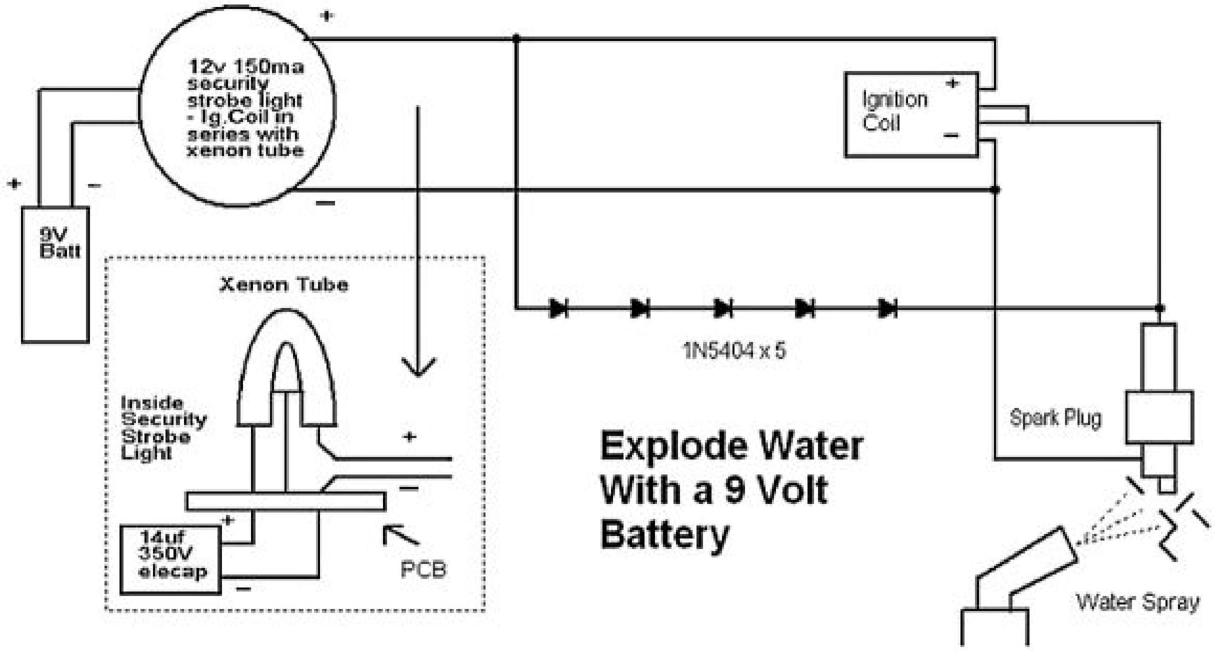

WARNING! High voltage! Experiment under expert supervision.

This simple device uses a small 9-volt battery to produce strong sparks at 1-second intervals in the automotive spark plug. When **salt water** is sprayed on the spark plug, it explodes. This is only a demonstration and proof-of-concept device, however the link given above shows how to run a small engine on this principle.

← WARNING! Looks very simple but there are high voltages involved – if you experiment do it under expert supervision!

A researcher that goes by the name *'Geo'* explain that the action between water vapor and a plasma arc (the high voltage spark effects) is NOT instantaneous disassociation of water into its components. It is not electrolysis or hydrolysis[121] of any kind.

It is very similar to Flash Steam[122], *Geo* further explains, or Lightening and Thunder – which is the discharge of high energy which pushes the air molecules between the water vapor molecules in the atmosphere at supersonic speeds. Thunder is essentially a sonic boom which we not only hear, but also FEEL its concussion. Water explosion is not a chemical combustion reaction, but the physical concussion[123] reaction with enough concussive force to push a piston down. In the above given document you will see how an engine is driven by this concussive force.

Where's the Scientific PROOF that it gives Free-Energy?

Four scientists verified that the explosion of water releases more energy than was put in. Read their scientific paper **"Arc-liberated chemical energy exceeds electrical input energy"** from 1998 by Peter Graneau (Northeastern University, Boston, USA), Neal Graneau (Oxford University, UK), George Hathaway and Richard Hull, published by ***Cambridge University Press:***
http://pondscienceinstitute.on-rev.com/pdffiles/Arc-liberated%20chemical%20energy.pdf

---

[121] Decomposition reaction where one reactant is water.

[122] Steam formed from hot condensate when the pressure is reduced.

[123] Violent shaking.

Abstract

> *This paper reports the first experimental results in which the kinetic energy of cold fog, generated in a water arc plasma, exceeds the electrical energy supplied to form and maintain the arc. The cold fog explosion is produced by breaking down a small quantity of liquid water and passing a kilo-ampere current pulse through the plasma.* ***The 90-year history*** *of unusually strong water arc explosions is reviewed. Experimental observations leave little doubt that internal water energy is being liberated by the sudden electrodynamic conversion of about one-third of the water to dense fog. High-speed photography reveals that the fog expels itself from the water at supersonic velocities. The loss of intermolecular bond energy in the conversion from liquid to fog must be the source of the explosion energy.*

More quotes from this paper

> *In 1994, we discovered that when a small quantity of water --- is converted to high-density fog within microseconds, the fog explodes violently. --- the fog explosion is unlikely to be caused by electrolytic dissociation of water molecules. Without this dissociation, the most likely source of the explosion energy is that stored by hydrogen bonds between the water molecules.*
>
> *--- The internal-energy difference between the cold fog expelled from the accelerator must be made up by atmospheric heat – that is, essentially by solar energy. No other energy source appears to be available for replacing the extracted kinetic energy.*

In 1907 Trowbridge, a Harvard University researcher produced the first photograph of a cold fog explosion →

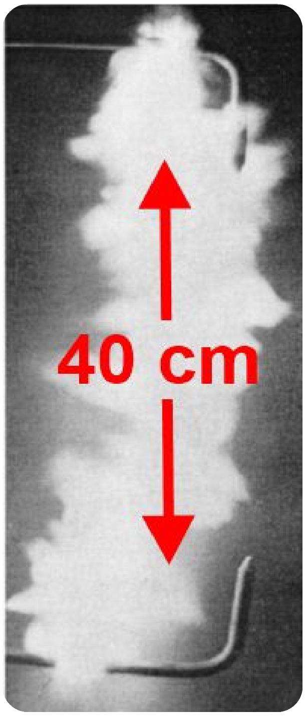

> *During the Second World War, Frungel (1948) measured the unusual strength of water arc explosions. He concluded that the explosions were not caused by heat and steam, and admitted freely that he was unable to explain the phenomenon.*

In 1986, MIT researcher Azevedo discovered the discharge of 3.6 kJ of stored capacitor energy would create ***pressures in excess of 20,000 atm in 7 ml of saltwater***.

> *In 1994, the present authors took the first high-speed photographs of water ejected from an arc accelerator, and discovered that the leading high-speed component was not a coherent liquid, but actually very dense fog, which finally expanded in the air under the laboratory ceiling. By trapping the fog in a balsawood absorber and measuring its temperature, it was found that the fog was still cold – at most a few degrees above ambient temperature.*
>
> *"**The discovery of cold fog explosions changed our scientific outlook** on the remarkable behaviour of water arcs."*

Further Study

- Watch "T. Boone Pickens Explains the Water Spark Plug": https://youtu.be/MJE8SXIiJcI
- "POSSIBILITY OF LIBERATING SOLAR ENERGY VIA WATER ARC EXPLOSIONS" http://files.myopera.com/H2earth/files/Liberating%20Solar%20Energy%20via%20Water%20Arc%20Explosions%20P2.pdf
- "Why Does Lightning Explode and Generate MHD[124] Power?" by Peter Graneau (published in Infinite Energy Magazine); presented at Infinite Energy's ***Cold Fusion and New Energy Symposium***, 1998, Manchester, New Hampshire (USA) www.rafoeg.de/20,Dokumentenarchiv/10,Personenbezogenes_Archiv/,Graneau_Peter_&_Neal/Graneau%20paper%20-%20Infinite%20Energy.pdf
- FUEL from thin AIR, presented by Daniel Green of **www.WaterSparkPlugs.com –** watch at https://youtu.be/pf8asPBoavQ
- "Electrically Induced Explosions in Water" – **Gary L. Johnson** from Kansas State University, presented to the 27th Intersociety Energy Conversion Engineering Conference held in San Diego, California, August 3-7, 1992. http://open-source-energy.org/rwg42985/russ/Patents/Electrically_Induced_Explosions_in_Water.pdf
- watersparkplugs.com/ - akin to Stanley Meyer's technologies, laser ignition etc.

← Photo: WaterSparkPlugs.com

In April 2015 a Major Qualifying Project titled "Electrodynamic Water-Arc Propulsion" was submitted to the Worcester Polytechnic Institute. They created a model boat propelled by water arc explosion (photo) and provide complete replication info: drawings, photos, part numbers. Credits: Chris Byrne, Chris Egan, Tyler Ewing, James Jackman and Rohan Jhunjhunwala - supervised by Professor William Michalson and Professor Cagdas Onal; sponsored by the New Energy Foundation. Once again, I'm reminded of Sir Anthony Griffin (Chapter 10) talking about ***boats floating on their own fuel…*** Download: https://www.wpi.edu/Pubs/E-project/Available/E-project-043015-152641/unrestricted/EWAPfinalPaperForSubmission2.pdf

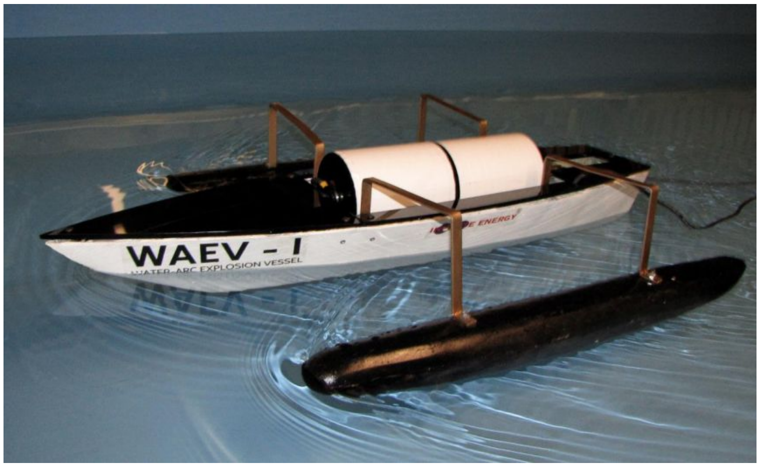

---

[124] Magneto Hydro Dynamic.

Water Explosion Engines

A century ago on May 15, 1917 (filed Aug 9, 1916), Gustav Fuehler from Verdon, South Dakota, was granted US Patent № 1,226,500 for his invention "***WATER EXPLOSION ENGINE***". SHORT DESCRIPTION: Water supplied via valve **30** is fed to the engine via valve **31** which is controlled mechanically by the engine. When the water spray from jet nozzle **29** strikes heated plate **26**, it immediately bursts and pushes on piston **14**. When piston **14** moves backwards under the inertia of flywheel **12**, valve **45** opens and allows the steam to exhaust through pipe **44**. Figures 2 through 4 describe plate **26** heating element, location in the engine and structure, respectively. www.google.com/patents/US1226500

1,226,500.

G. FUEHLER.
WATER EXPLOSION ENGINE.
APPLICATION FILED AUG. 9, 1916.

Patented May 15, 1917.

Fig. 1.

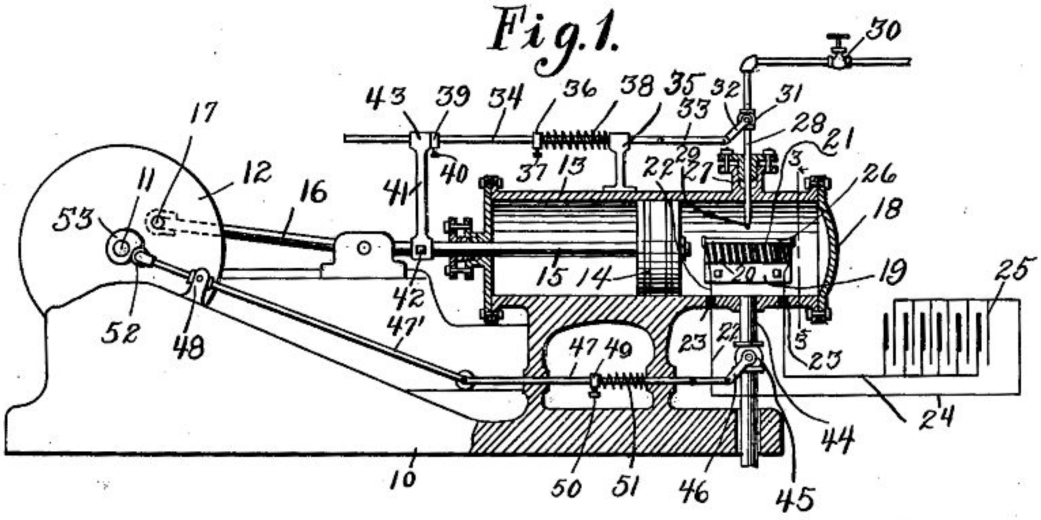

Fig. 2.

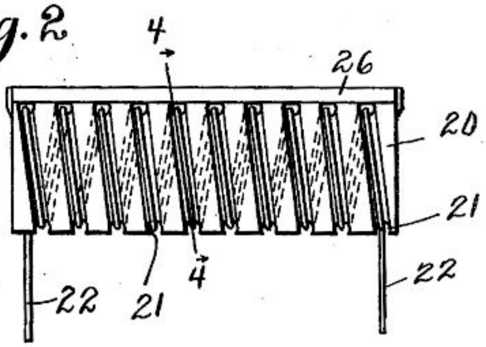

Fig. 3.

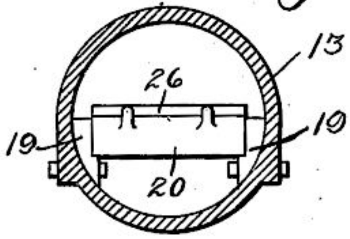

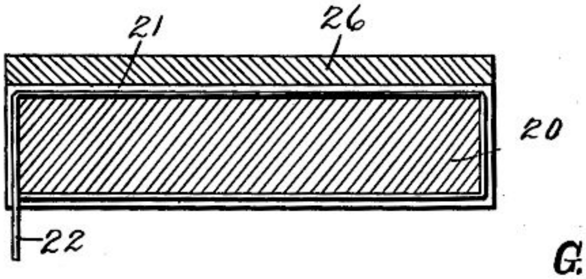

Fig. 4.

Inventor
G. Fuehler

Witnesses
Arthur K. Moore
L. N. Gillis

By Chandlee & Chandlee
Attorneys

Inventors: Johan Christiaan Fitter; Patricia Ann Crossley, Patent № 6220141 B1 "Liquid Projectile Launcher" – 2001

In an open end barrel, a dose of water mist is exploded by electromagnetic pulse from the circuitry. The explosion can be used as a water jet ("water gun") or a means to launch a payload over distance. In a number of applications it has been shown that water droplets projected at high velocity can retain their integrity until impacting on a desired target a selected distance away. Applications range from cutting machines, vaccination guns, or for ejecting a solid projectile from the barrel at high velocity. www.google.com/patents/US6220141

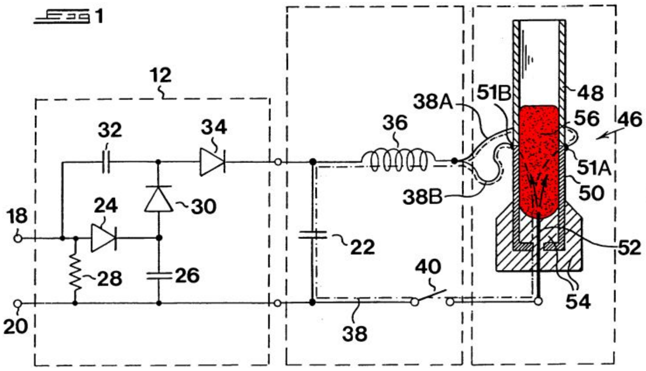

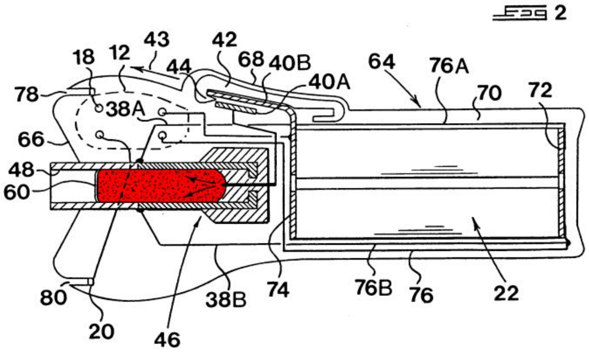

Inventor: Manfred Büsselmann (Cyprus), Patent App. № 2009/0173069 "Water Explosion Engine, Method, and Device" – 2009

The invention relates to a method for producing superheated steam in an engine in which highly compressed water is injected into a very hot medium located in the engine, resulting in explosion-like evaporation. Said process is to take place in a specially developed rotational-translational engine in order to utilize a maximum of the thrust of the steam. The engine is to comprise at least two cylinders which have a circular cross-sectional shape and inside which the drive shaft is disposed eccentrically. --- The rotor has an elongate, elliptical shape and separates the cylinder chamber into two expanding and contracting working chambers A and B.

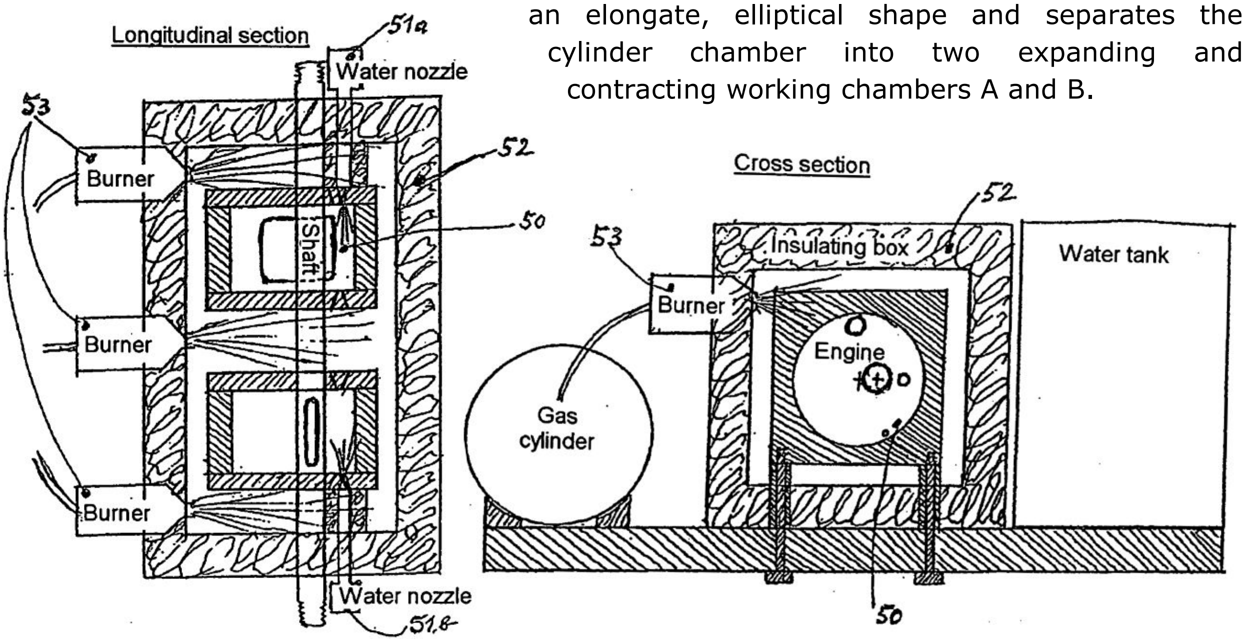

Chapter 18.
Is Waterfuel Legal???

Engine Carbon Clean Cambridgeshire 01763 257 317 added 4 new photos — at **LMS Vehicle Solutions Ltd.**
6 hrs

The Van is all ready to come to YOU at HOME or your place of WORK
CALL NOW FOR YOUR BOOKING

This chapter is about WATERFUEL ON USA ROADS, because that's where we encountered legal questions. But Waterfuel is so much bigger than one application in one country. Let me give you a live example that I found on Facebook; I don't know this individual (company?) and this is not an ad; this UK business created a mobile service for cleaning engines, that he operates out of his minivan. Looks like he purchased a Brown's Gas machine that he now uses for cleaning engines – as a mobile service. Great idea! You change NOTHING in the client's vehicle or boat or whatever they have, you just hook up to their engine for 30 minutes or so, start up the engine and the Brown's gas cleans up the inner carbon deposits. Good for performance, fuel economy and pollution reduction. Now this is just one example out of hundreds on how Waterfuel can be used 100% legally.

THIS CHAPTER IS NOT LEGAL ADVICE BUT INSPIRATION FOR FURTHER STUDY.

"ANTI-TAMPERING" RUMORS vs. FACTS
First, THE RUMORS

The rumors say that the EPA is against Waterfuel. Does this make sense??

Never mind the sense – let's LOOK at the FACTS. Street rumors I have been hearing for years quoted the EPA (U.S. Environmental Protection Agency) "anti-tampering" policy, but they only focused on the negative side – without looking at the broad picture. The rumors claimed that the EPA does not allow, and will heavily fine/prosecute **anybody** tampering with **any** fuel delivery or emissions control system on **any** vehicle. They sounded very intimidating. I've seen websites presenting the actual EPA policy, as "proof" of the rumors, but, yet again, they were overlooking some very significant details in the policy.

It seems that the EPA has invested a lot of consideration regarding the DETAILS and I thought this issue deserved another look. Here are the results of my observations.

"ANTI-TAMPERING" RUMORS vs. FACTS

And now, THE FACTS: EPA "tampering" policy (USA) DOES allow for Waterfuel experimentation

The first file is the EPA's "anti-tampering" policy document that negative forces have been using to claim that Waterfuel technology is illegal in the USA, both for merchants and for private experimenters. Examining the document closely, I have found this rumor to be completely false **in my opinion.** Mind you, I consulted with my attorney and this was also the opinion of my California Civil Law attorney since 2006.

The EPA policy document states that any unauthorized changes to the emission/fuel systems and combustion process are labeled illegal and you could be fined, etcetera. But then they ALSO mention "Memorandum 1A" and state its general intention:

> [QUOTE] ***"However, EPA has established an enforcement policy, Mobile Source Enforcement Memorandum № 1A (Memorandum 1A), to provide guidance to the public to reduce the uncertainty regarding potential liability under section 203(a)(3) of the Act for using or selling aftermarket parts or systems, or making adjustments or alterations to parts or system parameters."***
>
> Have you ever read Memorandum 1A? I have read it and it basically states that EPA will **not** consider any modification to a certified emissions control configuration to be a violation of the tampering prohibition if there is a reasonable basis for knowing that emissions are not adversely affected.

MY INTERPRETATION

Like my California Civil Law attorney was saying all along (we first examined this issue in 2006 and once again in 2008), since we are LOWERING emissions and since we are not trying to tamper with the vehicle in order to participate in hot-headed street races, we're working WITH the law and not against it.

In my humble opinion, Waterfuel enthusiasts should take this up and make sure that the EPA and whoever listens to the EPA would grant, on a regular basis, mandatory **rewards** for every vehicle equipped with emission-lowering technology. Waterfuel supporters should use the EPA policy to (1) morally **support** their fellow experimenters, (2) if need be, legally **protect** themselves and others. And don't relay ignorant rumors.

How to obtain your "reasonable basis"

When the EPA says "***reasonable basis for knowing that emissions are not adversely affected***" they mean it. Every experimenter, whether commercial or private, should perform smog tests before/after "tampering," to verify that their provisional Waterfuel installation has indeed resulted in lowered emissions. Example of a smog test done in Los Angeles before and after a **Water4Gas** installation (Ford 1989 F-250, 460 cubic inch):


Ford F250 similar to the one smog-tested (photo source: WikiMedia.org)

BEFORE Water4Gas

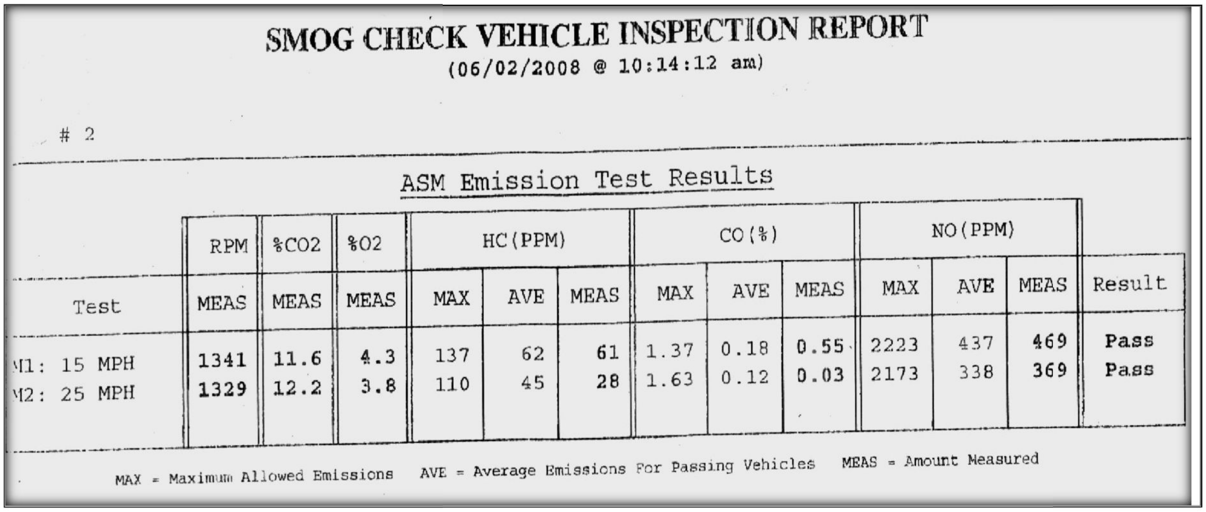
SMOG CHECK VEHICLE INSPECTION REPORT
(06/02/2008 @ 10:14:12 am)

2

ASM Emission Test Results

	RPM	%CO2	%O2	HC(PPM)			CO(%)			NO(PPM)			
Test	MEAS	MEAS	MEAS	MAX	AVE	MEAS	MAX	AVE	MEAS	MAX	AVE	MEAS	Result
M1: 15 MPH	1341	11.6	4.3	137	62	61	1.37	0.18	0.55	2223	437	469	Pass
M2: 25 MPH	1329	12.2	3.8	110	45	28	1.63	0.12	0.03	2173	338	369	Pass

MAX = Maximum Allowed Emissions AVE = Average Emissions For Passing Vehicles MEAS = Amount Measured

AFTER Water4Gas

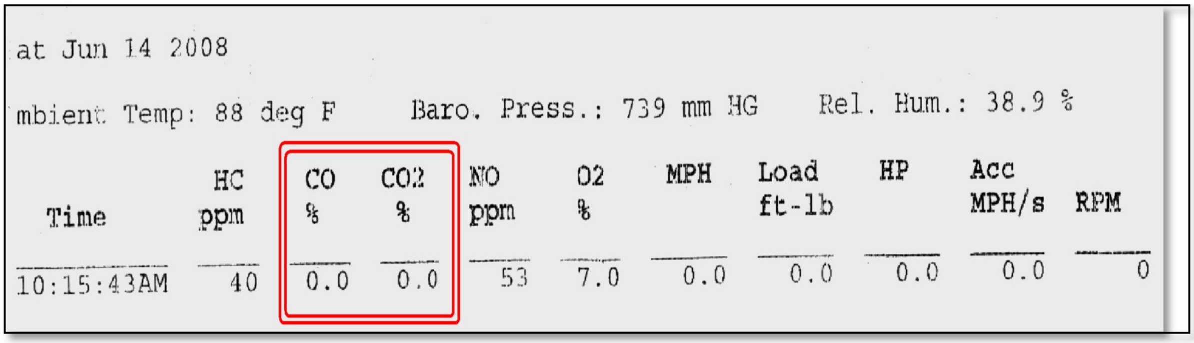
at Jun 14 2008

mbient Temp: 88 deg F Baro. Press.: 739 mm HG Rel. Hum.: 38.9 %

Time	HC ppm	CO %	CO2 %	NO ppm	O2 %	MPH	Load ft-lb	HP	Acc MPH/s	RPM
10:15:43AM	40	0.0	0.0	53	7.0	0.0	0.0	0.0	0.0	0

Let’s analyze the test results from previous page

CO_2, and CO went to practically ZERO!!! The NOx went down 85.6% and the output of oxygen to the atmosphere was almost doubled. HC (the least dangerous gas) went from 28 to 40 PPM but was still lower than average (45) and way lower than maximum (110).

Another test from Santa Monica, California: Ford Econoline 150, 8 cylinders →→ automatic *(similar to the one shown, photo from Wikimedia Commons)*

BEFORE Water4Gas

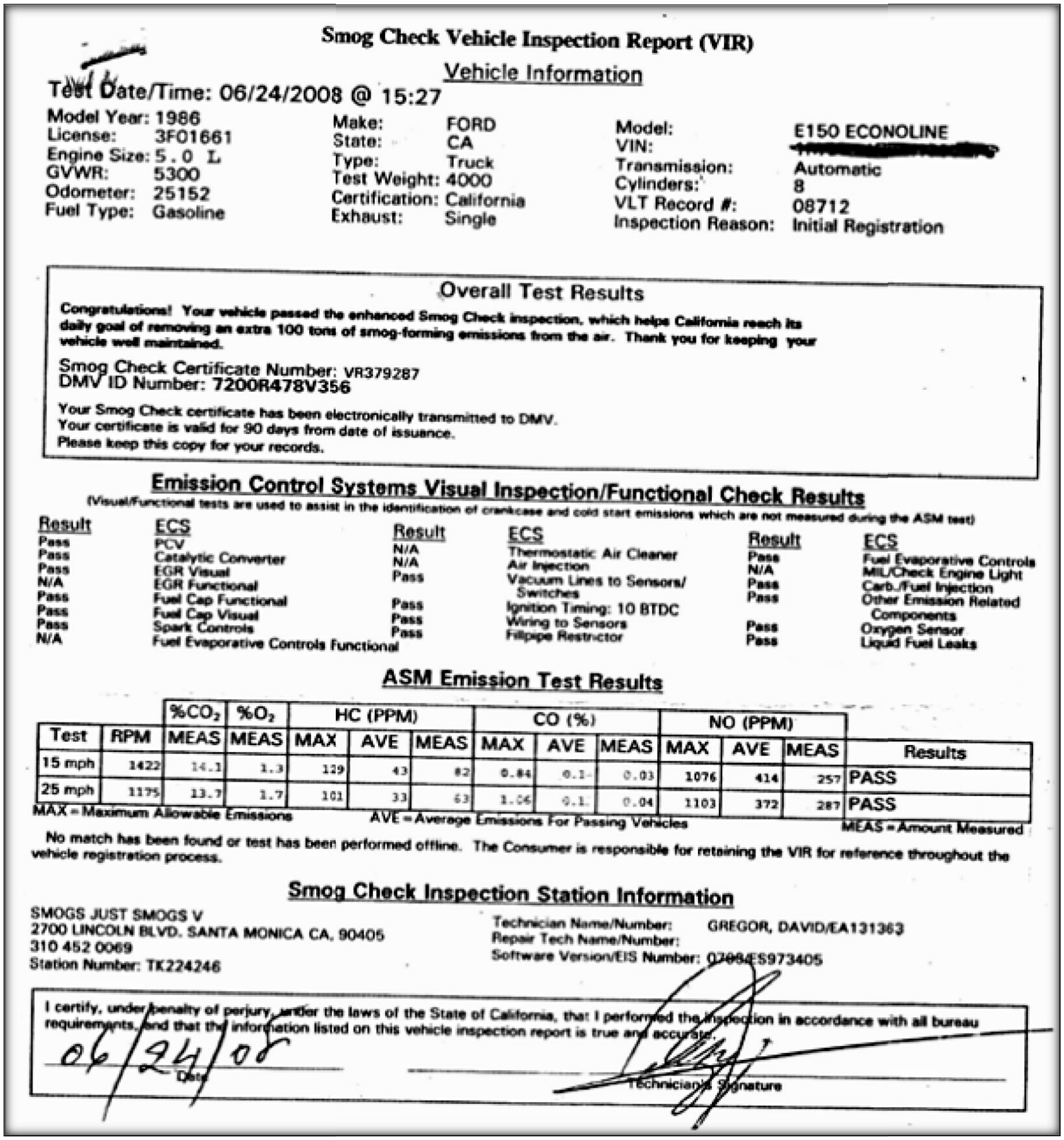

Smog Check Vehicle Inspection Report (VIR)

Vehicle Information

Test Date/Time: 06/24/2008 @ 15:27

Model Year:	1986	Make:	FORD	Model:	E150 ECONOLINE
License:	3F01661	State:	CA	VIN:	[redacted]
Engine Size:	5.0 L	Type:	Truck	Transmission:	Automatic
GVWR:	5300	Test Weight:	4000	Cylinders:	8
Odometer:	25152	Certification:	California	VLT Record #:	08712
Fuel Type:	Gasoline	Exhaust:	Single	Inspection Reason:	Initial Registration

Overall Test Results

Congratulations! Your vehicle passed the enhanced Smog Check inspection, which helps California reach its daily goal of removing an extra 100 tons of smog-forming emissions from the air. Thank you for keeping your vehicle well maintained.

Smog Check Certificate Number: VR379287
DMV ID Number: 7200R478V356

Your Smog Check certificate has been electronically transmitted to DMV.
Your certificate is valid for 90 days from date of issuance.
Please keep this copy for your records.

Emission Control Systems Visual Inspection/Functional Check Results

(Visual/Functional tests are used to assist in the identification of crankcase and cold start emissions which are not measured during the ASM test)

Result	ECS	Result	ECS	Result	ECS
Pass	PCV	N/A	Thermostatic Air Cleaner	Pass	Fuel Evaporative Controls
Pass	Catalytic Converter	N/A	Air Injection	N/A	MIL/Check Engine Light
Pass	EGR Visual	Pass	Vacuum Lines to Sensors/ Switches	Pass	Carb./Fuel Injection
N/A	EGR Functional	Pass	Ignition Timing: 10 BTDC	Pass	Other Emission Related Components
Pass	Fuel Cap Functional	Pass	Wiring to Sensors	Pass	Oxygen Sensor
Pass	Fuel Cap Visual	Pass	Fillpipe Restrictor	Pass	Liquid Fuel Leaks
Pass	Spark Controls				
N/A	Fuel Evaporative Controls Functional				

ASM Emission Test Results

		$\%CO_2$	$\%O_2$	HC (PPM)			CO (%)			NO (PPM)			
Test	RPM	MEAS	MEAS	MAX	AVE	MEAS	MAX	AVE	MEAS	MAX	AVE	MEAS	Results
15 mph	1422	14.1	1.3	129	43	82	0.84	0.1	0.03	1076	414	257	PASS
25 mph	1175	13.7	1.7	101	33	63	1.06	0.1	0.04	1103	372	287	PASS

MAX = Maximum Allowable Emissions AVE = Average Emissions For Passing Vehicles MEAS = Amount Measured

No match has been found or test has been performed offline. The Consumer is responsible for retaining the VIR for reference throughout the vehicle registration process.

Smog Check Inspection Station Information

SMOGS JUST SMOGS V
2700 LINCOLN BLVD. SANTA MONICA CA. 90405
310 452 0069
Station Number: TK224246

Technician Name/Number: GREGOR, DAVID/EA131363
Repair Tech Name/Number:
Software Version/EIS Number: 07084ES973405

I certify, under penalty of perjury, under the laws of the State of California, that I performed the inspection in accordance with all bureau requirements, and that the information listed on this vehicle inspection report is true and accurate.

06/24/08
Date

Technician's Signature

AFTER **Water4Gas**

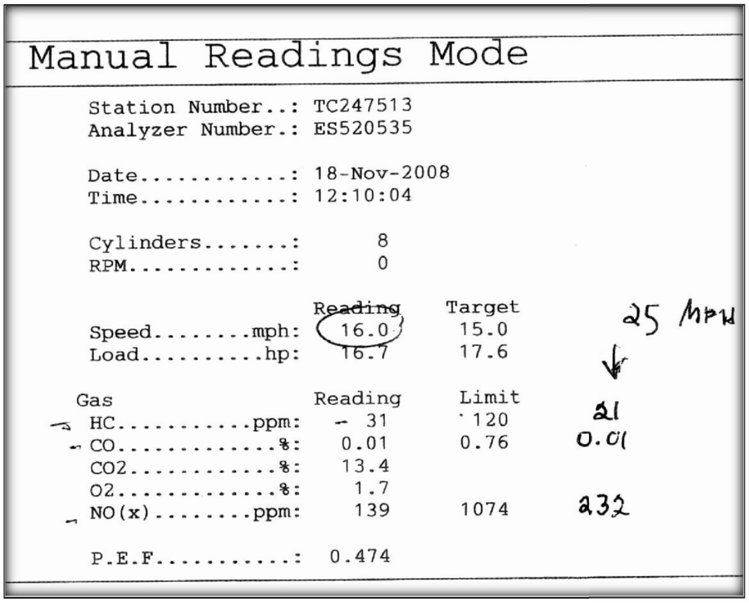

```
Manual Readings Mode

  Station Number..: TC247513
  Analyzer Number.: ES520535

  Date............: 18-Nov-2008
  Time............: 12:10:04

  Cylinders.......:      8
  RPM.............:      0

                    Reading     Target        25 MPH
  Speed........mph:   16.0       15.0
  Load..........hp:   16.7       17.6           ↓

 Gas                Reading     Limit
  HC...........ppm:    31        120           21
  CO.............%:   0.01       0.76          0.01
  CO2............%:   13.4
  O2.............%:    1.7
  NO(x)........ppm:    139       1074          232

  P.E.F...........: 0.474
```

Let's analyze these test results

The emission gases considered the most harmful are CO_2, NOx and CO. Hydrocarbons (HC) are basically unburned fuel and should be reduced as much as possible, too! Here's my calculation on these tests (last page and a half). I noted that 6 months passed between the tests and we have no documentation of what happened in between, however engines don't miraculously improve themselves in 6 months... they usually become worse.

Speed:	15 MPH	25 MPH
CO_2	14.1	13.7
CO_2 after **Water4Gas**	13.4	n/a
Reduced emissions:	**-5 %**	
NOx	257	287
NOx after **Water4Gas**	139	232
Reduced emissions:	**-46 %**	**-19 %**
CO	0.03	0.04
CO after **Water4Gas**	0.01	0.01
Reduced emissions:	**-67 %**	**-75 %**
HC	82	63
HC after **Water4Gas**	31	21
Reduced emissions:	**-62 %**	**-67 %**
O_2	1.3	1.7
O_2 after **Water4Gas**	1.7	n/a
ADDED OXYGEN:	**+30 %**	

As can be seen, a small amount of HHO reduced emissions significantly (5% to 75%) while ADDING 30% more oxygen to the atmosphere. ← This effect has been confirmed in other experiments.

EPA’s Policy Update — 1997

This is a later edition of the EPA’s “Memorandum 1A” dated September 4, 1997. At first glance it seems to limit what was being allowed by the older version of this same Memorandum, from June 25, 1974. I have read the entire document and found out that it **only and explosively** modifies the original EPA’s policy regarding compressed natural gas (CNG) or liquefied petroleum gas (LPG or propane), referred to as “alternative fuels.”

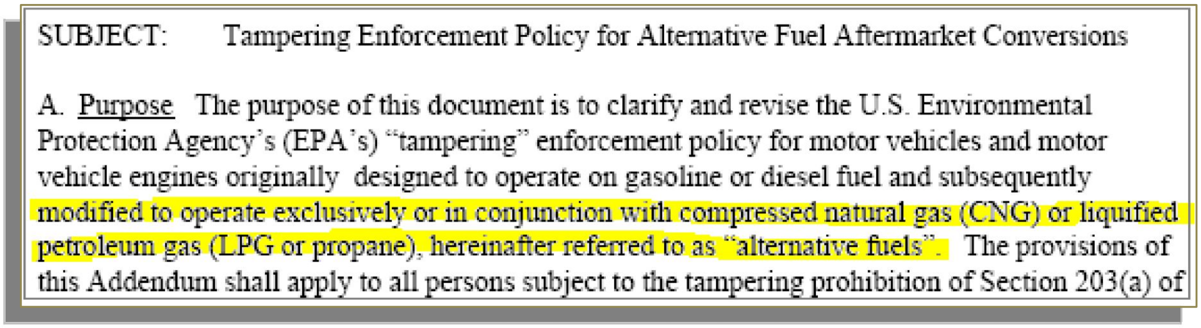

SUBJECT: Tampering Enforcement Policy for Alternative Fuel Aftermarket Conversions

A. Purpose The purpose of this document is to clarify and revise the U.S. Environmental Protection Agency’s (EPA’s) “tampering” enforcement policy for motor vehicles and motor vehicle engines originally designed to operate on gasoline or diesel fuel and subsequently modified to operate exclusively or in conjunction with compressed natural gas (CNG) or liquified petroleum gas (LPG or propane), hereinafter referred to as “alternative fuels”. The provisions of this Addendum shall apply to all persons subject to the tampering prohibition of Section 203(a) of

Read the entire document and see that there is nothing in it beyond the quote above, that modifies the spirit or the specifics of the original policy regarding Waterfuel. Therefore, the original policy still holds that (quoting the law again): “EPA will **not** consider any modification to a certified emissions control configuration to be a violation of the tampering prohibition if there is a **reasonable basis for knowing that emissions are not adversely affected.**”

EPA’s Policy Update — 2009 — *LATER MEMORANDUM FOLLOWS THE SAME SPIRIT*

If you read the EPA memorandum signed January 16, 2009, it seems like it mostly aims at catching criminals and punishing them with heavy financial penalties.

But is it really aiming at backyard tinkerers who constantly try to LOWER EMISSIONS? On the page marked 12 the paragraph “*Actual or Potential Harm*” shows you that these EPA guys are reasonable and take into consideration the actual amount of damage done in terms of excess emissions. In other words, if no harm was done, there is no actual violation.

Additionally, if you zoom out and get the spirit of the document as a whole, you can see that it aims at criminals who violate emissions control for financial benefits of avoiding costs (such as building engines without proper engineering, or bypassing a broken catalytic converter to avoid the cost of a new one). Waterfuel enthusiasts do not fall within this category!

Speaking of natural gas, propane, etc., it reminds me of the issue of **WHAT IS THE LEGAL CLASSIFICATION** of HHO, Brown's Gas etc., when ***used as "supplemental hydrogen" to an internal combustion engine.*** After all these years, I stopped calling it "hydrogen fuel" or even "fuel" – and from my broader understanding today I know it doesn't deserve a "fuel additive" label either. We don't add HHO to the fuel, do we? The engine does! We just throw a little bit of HHO into the air intake ONLY while air does actually get sucked into the engine. ***We're dealing with an AIR ADDITIVE, not a fuel additive!!!!!*** I'm not aware of an EPA classification or any other Gov't law for "engine air additives". Again this is not legal advice but I think it's a major point to consider – take it up with your attorney and Gov't officials if necessary. This may make them uncomfortable, having to sweat over a new classification and deal with all the science and technical documentation presented here, but that's their job – to properly classify it or leave it alone. Your job is to present the data (or whole book) and insist that HHO is an AIR ADDITIVE and nothing else.

Gas Saving and Aftermarket Retrofit Device Evaluation Program

The table below shows a list of gas savers performed by the EPA through their "Gas Saving and Aftermarket Retrofit Device Evaluation Program." It was taken from their website http://www.epa.gov/OMS/consumer/reports.htm and re-ordered by year (when tests were performed and published by EPA).

Look at item number 10 in the EPA list: the last evaluation by the EPA of any **Waterfuel** device was done 33 years ago!!! And the overall number of tests since then, nine devices in all, indicates that the EPA is not very busy evaluating new fuel savers… Why hasn't the EPA tested any newer technologies? You can see in this book the THOUSANDS of government-produced pages indicating the capability of hydrogen and water to achieve exactly what the EPA is aiming for, isn't it so?

№	***Product Name***	***Tested***
1.	Super FUELMAX (magnets)	2005
2.	Inset Aftermarket Retrofit Device (metal device in fuel line)	1999
3.	PetroMoly HP Motor Oil (oil, not device!)	1999
4.	Tail Pipe Cat (supplemental catalytic converter)	1999
5.	Vitalizer III (copper tube in fuel line)	1999
6.	Fuelon Power (fuel additive)	1991
7.	Platinum Gasaver (plastic bubbler with platinum solution)	1991
8.	AUTOTHERM (coolant circulation)	1985
9.	POLARION X (magnets)	1985
10.	Atomized Vapor Injector *(water+alcohol vaporizer)*	1983*

* *In actual fact the device* ***was never tested by the EPA!*** *In 1982 they threw the ball back to the inventor Lewis J. Schneller who couldn't afford the extortionate lab fees ($1/mile plus* ***$11,750*** *for a 10-minute installation, engine inspection and analyzing simple data). They ignored successful tests performed by Roy Wilhelm, the Vehicle Maintenance Supervisor*

for the city of Missoula, Montana that have been submitted by the inventor. Read all about it in the EPA report: http://www.epa.gov/OMS/consumer/devices/pb83214684.pdf I've built and installed quite a few of these vaporizer devices between 2006 and 2008, and they have outperformed my expectations; see inventor's replication diagram below the table, and free plans with much greater detail are available at www.Water4Gas.com

№	**Product Name**	**Tested**
11.	Cyclone-Z	1983
12.	"Gas Saving & Emission Control Improvement" device	1983
13.	Gyroscopic Wheel Cover	1983
14.	Hydro-Vac	1983
15.	Kamei Spoilers	1983
16.	Malpassi Filter King (fuel pressure)	1983
17.	Mesco Moisture Extraction System	1983
18.	Optimizer	1983
19.	P.S.C.U. 01 Device	1983
20.	POWERFUEL	1983
21.	Dresser Economizer	1982
22.	Dynamix	1982
23.	***VEECD*** (air bleed device)	1982
24.	Energy Gas Saver	1982
25.	Fuel Economizer	1982
26.	Hot Tip	1982
27.	Jacona Fuel System	1982
28.	Kat's Engine Heater	1982
29.	P.A.S.S. KIT	1982
30.	PETRO-MIZER	1982
31.	POLARION X	1982
32.	Russell Fuelmeiser	1982
33.	Super-Mag Fuel Extender	1982
34.	Turbo-Carb	1982
35.	ACDS Automotive Cylinder Deactivation System	1981
36.	Autosaver	1981
37.	Baur Condenser	1981
38.	Dresser Economizer	1981
39.	Fuel Max	1981
40.	Fuel Maximiser	1981
41.	Gas Meiser I	1981
42.	Glynn-50	1981
43.	Greer Fuel Pre-heater	1981
44.	IDALERT	1981
45.	Moleculetor (metallic)	1981
46.	Paser Magnum/Paser 500/Paser 500 HEI	1981
47.	PETROMIZER SYSTEM	1981
48.	SYNeRGy 1	1981
49.	Treis Emulsifier	1981
50.	ULX-15/ULX-15D	1981
51.	V-70 Vapor Injector	1981
52.	Wickliff Polarizer (fuel line and air intake)	1981
53.	Tephguard [oil additive from 1980]	1980?

№	**Product Name**	**Tested**
54.	Auto-Miser	1980
55.	Basko Enginecoat	1980
56.	Environmental Fuel Saver	1980
57.	Fuel Conservation Device	1980
58.	FuelXpander	1980
59.	Goodman Engine System, Model 1800	1980
60.	Pass Master Vehicle Air Conditioner	1980
61.	Ram-Jet	1980
62.	Waag-Injection System	1980
63.	XRG #1 Fuel Additive	1980
64.	NRG #1 Fuel Additive	1978
65.	Turbo-Dyne G.R. Valve	1978
66.	Ball-Matic Air Bleed	1976
67.	El-5 Fuel Additive	1976
68.	Electro-Dyne Superchoke	1976
69.	Landrum Mini-Carb	1976
70.	Morse Constant Speed Accessory Drive	1976
71.	Econo-Mist Vacuum Vapor Injection System	1975
72.	Rolfite Upgrade Fuel Additive	1975
73.	Analube Synthetic Lubricant	1974
74.	Lamkin Fuel Metering Device	1974
75.	Smith Power and Deceleration Governor	1974
76.	Vareb10 Fuel Additive	1974
77.	Hydro-Catalyst Pre-Combustion Catalyst System	1973
78.	SCATPAC Vacuum Vapor Induction System	1973
79.	Air-Jet Air Bleed	1972
80.	Berg Air Bleed	1972
81.	Econo Needle Air Bleed	1972
82.	Magna Flash Ignition Control System	1972
83.	Monocar HC Control Air Bleed	1972
84.	Sta-Power Fuel Additive	1972
85.	Stargas Fuel Additive	1972
86.	Technoi G Fuel Additive	1972
87.	Brisko PCV	1971
88.	Frantz Vapor Injection System	1971
89.	Pollution Master Air Bleed	1971
90.	BIAP Electronic Ignition Unit	1970

Atomized Vapor Injector

Examine the diagram and instructions for the Atomized Vapor Injector (item #10 in the above list). Basically this is the same simple bubbler I had in my Ford Bronco back in 2006. It made that 20-year old truck run much smoother and quieter, and drastically reduced the terrible emissions of its old fuel-injected engine. And I wasn't even using alcohol, just tap water. The inventor priced it at $29.95 and you can build one for 10% of that, per the open-source instructions www.Water4Gas.com

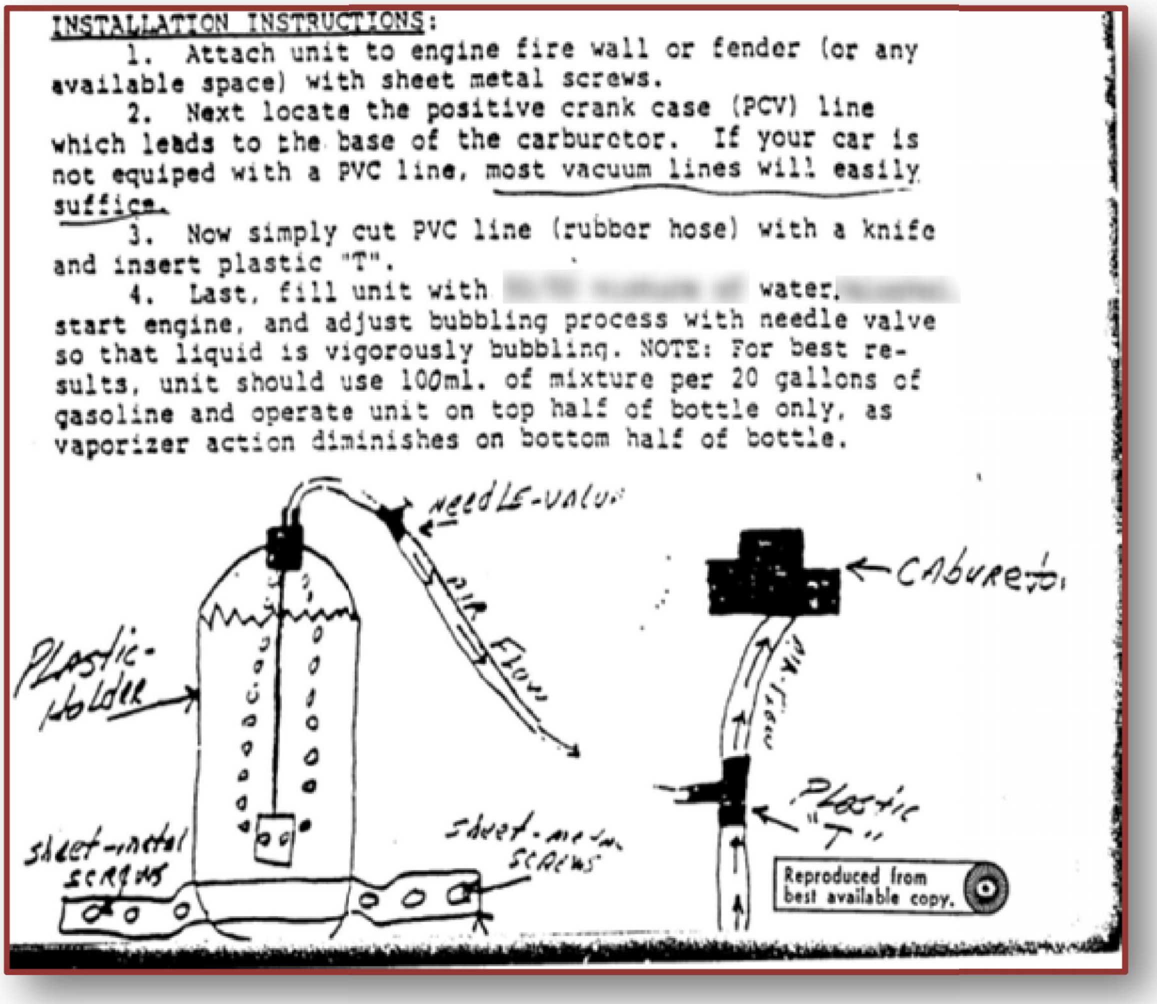

INSTALLATION INSTRUCTIONS:

1. Attach unit to engine fire wall or fender (or any available space) with sheet metal screws.

2. Next locate the positive crank case (PCV) line which leads to the base of the carburetor. If your car is not equiped with a PVC line, most vacuum lines will easily suffice.

3. Now simply cut PVC line (rubber hose) with a knife and insert plastic "T".

4. Last, fill unit with [redacted] water.[redacted] start engine, and adjust bubbling process with needle valve so that liquid is vigorously bubbling. NOTE: For best results, unit should use 100ml. of mixture per 20 gallons of gasoline and operate unit on top half of bottle only, as vaporizer action diminishes on bottom half of bottle.

Image: EPA report www.epa.gov/OMS/consumer/devices/pb83214684.pdf (page 27)

Points to consider

1 It is important to note that the EPA's "Gas Saving and Aftermarket Retrofit Device Evaluation Program" is **not** mandatory, and it starts – according to the program's rules – only when an invention is fully developed (and I don't think Waterfuel will ever be "fully developed"). The program is also restricted to four-wheeled highway vehicles weighing 6,000 pounds or less. Therefore, it is very limited in scope when compared with the myriad of uses for Waterfuel. So this program is **NOT** for big-rig trucks, boats, motorcycles, generators, furnaces, trains, planes…

ILLUSTRATIONAL

2 It seems to me that this voluntary program fits only fully developed products that you want to bring to the market. **Experimental** technologies, and technologies that require customizing a solution (device, system,

installation and/or tuning) car-by-car or engine-by-engine, cannot be evaluated. Examine the EPA documents closely and you'll see what I see.

I've met guys who struggle and sweat to get supplemental Brown's Gas approved as "fuel" or "fuel additive" when in essence it is none of the above. Adding a negligible amount of Brown's Gas to the AIR intake of an engine has nothing to do with fuel additives, and it is obviously ***not fuel*** as it would not suffice to propel a child's toy car.

3. George Wiseman says in his document "PROOF THAT ON-BOARD BROWN'S GAS (BG) GENERATION & SUPPLEMENTATION WORKS" in Chapter 10 above:

> **The FACT is, properly applied, CEIT[125] does not remove, modify or deactivate existing anti-pollution equipment AND the pollution usually drops significantly when appropriate combustion enhancement technology is applied; *so the 'anti-tamper laws'* mechanics *refer to* *aren't applicable*. Further, the Magnusson-Moss Consumer Product Warranty Act of 1992 allows people to add any equipment they desire without voiding a vehicle's warranty.**

4.

Waterfuel Used by Police

Small-town Mayor installs Water4Gas on his Police Force Fleet

Here's an unsolicited story that was published by a local newspaper in Anderson County of South Carolina, USA, as well as aired on a TV network from the neighboring Greenville County. This piece of TV news cover story focused on **Water4Gas** from an interesting angle – the police force – and it was coming from the Mayor and his Chief of Police.

---

[125] Combustion Enhancement Interface Technology (see Glossary for full definition).

According to that TV article, the Mayor of a small town named *Honea Path* (south of Greenville in Anderson County) was experimenting with all sorts of alternative fuel options.

Mayor Lollis Meyers decided to equip his police fleet with **Water4Gas** systems to save his taxpayers money. Chief of Police, David King, was interviewed on TV saying that some people around town didn't believe it, and naturally he was skeptical too in the beginning. But, as he reported, his SUV gained an 8 MPG increase in fuel economy. Watch it on YouTube: http://www.youtube.com/watch?v=f9vTK5w7Ixc

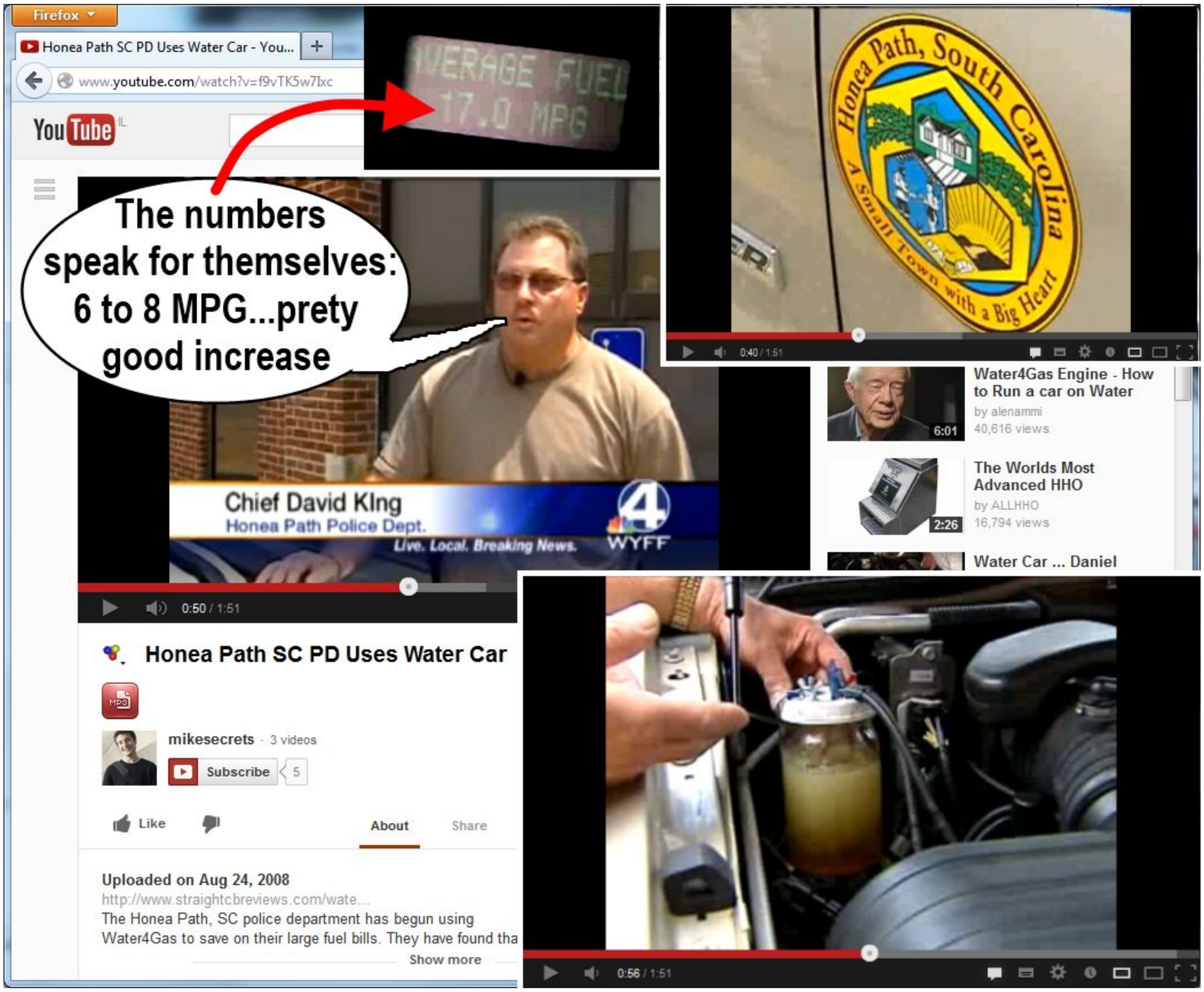

Honea Path SC PD Uses Water Car

Uploaded on Aug 24, 2008
http://www.straightcbreviews.com/wate...
The Honea Path, SC police department has begun using Water4Gas to save on their large fuel bills. They have found tha

The following quote is from a July 2008 article titled "Baking soda and used cooking oil could be the keys to lower gas costs in Honea Path" written by Samantha Harris and published in the Independent Mail of same Anderson County in South Carolina, USA.

> A hydrogen-generating device was installed on a patrol car Thursday, he [Mayor Lollis Meyers] said. Using water and baking soda, the hydrogen device gives the cars better gas mileage.
>
> "It's kind of a fruit jar with a probe inside," Meyers said. "You put in baking soda, and it generates (a compound) which when you compress it, it creates hydrogen and gives you better fuel mileage. It's so simple it's scary."
>
> So far, the mayor is impressed with the results.
>
> "I went to Augusta yesterday and got the (device) put on," he said. "Going down, I got 15 miles a gallon," he said. "But coming home I got 23 miles a gallon."
>
> If either of these measures saves the town gas money, it will be worth the try, said Rusty Burns, town spokesman.
>
> "We will continue to monitor these projects to see if they help our bottom line," Burns said. "But the town appreciates the mayor's innovation in trying to combat rising fuel costs."

Source: http://www.independentmail.com/news/2008/jul/10/baking-soda-and-used-cooking-oil-could-be-keys-low/?print=1

With **Water4Gas** he gained 53% better mileage according to the Mayor's own report in the newspaper. Looking at the TV newscast it looks like they're using Ford Explorers of 2007-2008. According to www.fueleconomy.gov this type of SUV was averaging 15 or 16 MPG at the time; This makes sense because the 8 MPG increase reported by the Chief of Police represents an improvement of fuel economy by at least 50%. Not bad for a heavy vehicle in public service! (~Ozzie)

LEGAL DISCLAIMER

Everything I say here is **MY OWN INTERPRETATION** of official documents as I have found them. You are strongly advised to read the cited documents and draw your own conclusions. I am not a lawyer and as already stated in the beginning of the book, none of the statements in this book should be taken as legal advice. ~Ozzie

Beloit City installed Waterfuel systems from Protium Fuel Systems on several vehicles: police patrol car, large pickup truck, garbage truck and recycling truck

The following quote is from an April 2009 article titled "Hydrogen boosts Beloit" written by Kayla Bunge and published in the GazetteXtra. Beloit is a city in Rock County, Wisconsin, USA.

t already has seen its small pickup truck go from 14 to 22 mpg---a 57 percent
gotten gas mileage as high as 31 mpg---a whopping 121 percent increase. A
from 12 to 20 mpg---a 67 percent increase.

Photo by Bill Olmsted

Source: http://gazettextra.com/news/2009/apr/06/hydrogen-boosts-beloit/

> ***BELOIT — What started as a science experiment in a man's garage could result in six-figure savings for the city of Beloit.***
>
> ***As part of its commitment to sustainability, the city has installed hydrogen-on-demand units on five vehicles—a police squad car, a small pickup truck, a large pickup truck, a garbage truck and a recycling truck, said Chris Walsh, operations director for the public works department.***
>
> ***"This is huge for the city of Beloit," she said.***
>
> ***The technology could help the city significantly boost its gas mileage, trim its fuel costs and minimize its carbon footprint, Walsh said.***

This is not one of my systems. A further quote from that article described their simple Waterfuel system and stated how much they were saving on fuel:

> ***The modest unit — fashioned from stainless steel electrical wall plates, PVC pipe and plastic tubing — produced impressive results: The pickup truck went from 11 miles per gallon to 22 miles per gallon during a 70-mile test drive.***

Now, if this is not DOUBLE MILEAGE then what is?

They calculated that if installed on their entire fleet, with a mere 25% economy gain the public works department ***could save $177,565 every year*** out of its $710,259 annual costs fuel costs at that time.

And why didn't these city/police departments see any legal problem with Waterfuel? Because as far as I can see there is no legal problem with PROPER installations. Obviously they didn't see any such problem either.

Philippine Police Car Powered with HHO – and they're proud of it!

Sources: http://www.rexresearch.com/hhopat/hhocdnpats.html and http://arizonaenergy.org/News_14/News_Nov14/PhilippinePoliceCarPowered.html

PEPSI

A company named DynaCert (CEO Jim Payne, www.dynacert.com) out of Toronto, Ontario, Canada, has managed to create bold headlines when it introduced its Waterfuel technology trademarked HydraGen™ to major clients, and maybe the most famous client involved hundreds of Pepsi Beverage trucks. Here's the short story from their website, and you can see more on YouTube:

> ***"The results show that the HydraGen™ has the ability to reduce emissions, increase torque, improve engine oil quality, as well, in the case of Fortune 500 giant, Pepsi Beverage Company, deliver a 15% reduction in Diesel fuel costs. This is significant."***

Pepsi Beverages Company Fleet Adds Hydrogen-Injected Trucks

With an expected goal of increasing fuel economy by 15 percent per year and reducing fuel usage by more than 4,200 gallons per vehicle, per year, PBC is looking toward alternative-fuels for its delivery fleet.

By Lauren Fletcher

Image: "Pepsi Truck Commercial" https://www.youtube.com/watch?v=w1poi6jy6jg

Reference: http://www.greenfleetmagazine.com/article/story/2012/01/pepsi-beverages-company-fleet-adds-hydrogen-injected-trucks-grn.aspx

DHL

San Diego's news channel KUSI (www.kusi.com) featured a company named Hydrogen Power Systems, Inc. (www.HpsTech.com) from Escondido, California. A commercial installation was shown where they installed their systems on DHL delivery trucks. The story from their website:

> ***"Hydrogen Power Systems installed and tested a Series 200 Hydrogen Enhanced Combustion System on a DHL delivery van owned and operated by Belt Transport Inc. of Ontario, California."***

Download the full story and test results from their website: http://hpstech.com/1/Hps-DHL_Duramax_Van_Install.pdf

Image: "DHL Trucks Saving Fuel Using Hydrogen"
www.dailymotion.com/video/x25o1iu_dhl-trucks-saving-fuel-using-hydrogen_auto

Their Boat & Yacht Installations

The company also has successful marine installations (quotes below from their website):

*"Hydrogen Power Systems confirmed a fuel economy improvement between **18% to 21% on a 25' gasoline powered motor fishing boat**..." (January 2013)*

Watch the full story and test results:
http://hpstech.com/1/SkipJackBoatTest.wmv

*"Tests on **50' Diesel powered yacht delivers a 7.1% improvement in fuel economy**..." (November 2012)*

Download the full story and test results:
www.hpstech.com/articles/11-11-12_Volvo_Boat_Test.pdf

Pakistan

In 2012 in Islamabad, one of my **Water4Gas** students, engineer Waqar Ahmad (without my knowledge or involvement) introduced his Waterfuel car to Pakistani Parliament, scientists, religious leaders and students – thus hitting major headlines and TV news in Pakistan – and getting Government promise to back up the project.

Pakistani Government Toyota limousine enhanced with HHO: https://youtu.be/sZaLe54QI7s

Other engineers generated similar headlines in India and Pakistan with cars and motorcycles. Many motorcycles have been converted to HHO hybrids, for example this one by Waterfuel enthusiast Qamar Zaman (http://qamar-zaman-hho.blogspot.com):

Comment: As far as I can tell, the language used in some of these reports make it sound like they are running on 100% water, which is most probably not the case. Yet I'm sure they are using HHO successfully just like I did, and actually MUST do so in the poverty-stricken parts of the world, where even a small motorcycle's gas budget is a heavy expense. (~Ozzie)

Chapter 19.
Waterfuel's Many Uses

Sources: George Wiseman (Eagle-Research.com), Andrew Michrowski, et al.

Water as LIQUID

Adding *LIQUID WATER* to save Fuel and reduce emissions

It has long been known that LIQUID WATER can be mixed with hydrocarbon fuel to save fuel (because water is cheaper…) and also to help the combustion process so as to reduce NO_x and other emissions. I met mechanics who have known this (in crude form) for many years. Opponents claim that water may destroy the inlaying lubrication oil film of the cylinder, rust the engine, etc. However, they do not realize that (if properly treated, mixed and injected) water does not pour down as liquid into the engine, but rather plays part of the evaporated liquid which is part hydrocarbon fuel and part evaporated water. This is backed up by research:

- *1998 – Holtbecker; Geist: "Exhaust emissions reduction technology for Sulzer marine Diesel engines: General aspects" (Wärtsilä NSD Switzerland Ltd., Winterthur, Switzerland)*
- *1995 – Vollenweider; Geist; Schaub: "Residual fuels in emission-controlled Diesel engines: Background, developments and operational results" (Proceedings of the 1995 CIMAC Congress, Interlaken, Switzerland)*
- *To add LIQUID WATER to fuel, various emulsion[126] formulas have been in use and have been presented **in official Patents** (see Chapter 20 and Chapter 21), videos and reports.*

In the DVD "Water – The Great Mystery" (details and ordering link in Chapter 38) created in 2008 by Saida Medvedeva and Sergey Shumakov, the researcher/inventor Zhang Guohua from Dalyan, China, demonstrates the mixing of his ***"structured water"*** with fuel; in the film he reports 5% increase in power with 20% better fuel economy. Guohua also said: "Our government sees this as very important."

According to Dr. Konstantin Korotkov (www.Korotkov.org) Guohua invented a method of ***structuring water*** with the help of arc magnetism. He created a device for receiving magnetized water (self-revolving energy riser) which can change structure of water."

---

[126] Mixing liquids that wouldn't normally blend (for example: water+fat=milk).

Water VAPOR

Water VAPOR to save fuel, cool the engine, reduce emissions

Water can be injected into the air intake of an internal combustion engine, where it will vaporize and eventually mix with the fuel, as water vapor. Water can also be injected directly into the cylinder where it will vaporize and serve a similar purpose – in both cases lower emissions and cooler engine are known effects. Depending on the engine there are various methods to then lean the mixture and lower fuel consumption to some degree. See Patents on *WATER INJECTION in several chapters.*

Learn more:
http://www.flightglobal.com/pdfarchive/view/1952/1952%20-%200092.html

Use as a torch fuel

HHO

Brown's Gas eliminates many of the disadvantages associated with conventional gas welding like dangerous oxy-acetylene bottles. It is inexpensive, doesn't pollute the atmosphere, and ***safely dissipates in the workshop rather than sinking and accumulating near the floor like Acetylene gas tends to do***. Since it welds notably better, cleaner and faster, it has become popular (especially in the East) between welders and jewelers alike.

George Wiseman has dedicated a whole website www.WaterTorch.com to this use of Brown's Gas, in which he demonstrates how the unique flame does not immediately burn the skin yet brings about extremely high temperatures when interacting with metals.

On its potential he states that *"Brown's Gas (BG) is an industry-transforming technology with an annual revenue potential of $300,000,000.00 . . . just in cutting applications."*

Atmospheric Enhancement

HHO, Water

George Wiseman (British Columbia, Canada) tells a personal story:

> ***"We now live in an area that has very dry air. We were using nearly a gallon (4 L) of water a night to keep our bedroom moist enough so that we could breathe easily. We are finding that the Brown's Gas gives us the same results using only a cup (250 mL) of water per night."***

Creating New Industrial/Building Materials

HHO

Brown's Gas can both make and weld rubies together. Brown's Gas can weld sapphires together. When Brown's Gas cooks rocks, it turns them into semiprecious material; for example feldspar (rock-forming minerals that make up as much as 60% of the Earth's crust) turns into a transparent form of moonstone, which can be used as a nearly indestructible building material (colors can be added).

HHO

Electrolyzer

There are several schools of thought regarding the best method of electrolysis, ranging from series to parallel plates, as well as stainless steel vs. titanium vs. platinum vs. nano-coating; and there are competing claims to technology rights. In general, a number of electrodes, effectively in series, are arranged adjacent each other in a common electrolytic chamber, the chamber being provided with a gas collection space. Commonly only the end electrodes are connected to the power supply. Additionally the need for a transformer for most applications can be eliminated by such an arrangement so that the apparatus can be designed to be directly connected to a main electrical supply or through a bridge rectifier if so desired. By eliminating the need for a transformer, the gas generating equipment as a whole can be made surprisingly compact, to be well suited for small domestic as well as heavy industrial requirements.

Pure 'New' Water Manufacture

HHO, Water

Water researcher and bestseller author ("Hidden Messages in Water") Dr. Masaru Emoto showed that water can be 'programmed' to pass on health. This is easy to do with the water formed by the 'exhaust' of the Brown's Gas flame. The production of Brown's Gas 'erases' previous programming and then we can impress new programming on the water as it is newly reformed. Therefore you can make water that gives a feeling of relaxation and well-being just by drinking it.*

Detoxifying Water*

HHO

In North America chlorine is used to purify water, intending to kill microorganisms that cause disease. But chlorine is in itself a deadly poison and attempts are made to put in just enough of it to kill the microorganisms and not the person drinking it. In Europe and other countries water is purified using Ozone, a form of oxygen. Oxygen kills the microorganisms without harm to people. Brown's Gas is an excellent way to oxygenate drinking water!

---

* DISCLAIMER: We are not medical doctors and this is not medical advice!

Hydrated Water for Health*

[Photo: http://www.ChargedForLife.com ← you can purchase it here]

When Brown's Gas is bubbled through clean water, the water absorbs oxygen and hydrogen. Wiseman thinks there is an additional energy (electrical in nature) added to the water as well. From personal experience I found that drinking the resulting enhanced, oxygenated and hydrated water made me alert (like drinking a cup of coffee, without the side effects) and strong enough to ditch the ALL the vitamins I was on.

Many people know that oxygenated water is healthful. There are many companies selling water that has had oxygen added to it. What is generally unknown is that water is even more healthful when hydrogen is added to it. The act of drinking water is called "hydrating the body." An astonishing fact is that chlorinated water, coffee, carbonated and sweetened fluids are generally **dehydrating**. Most of the diseases known to mankind (including aging) can be prevented or mitigated by hydrating the body.

Every test of Brown's Gas enhanced water shows it to be super hydrating, far superior to regular water (as much as 10 times). Enhanced water is an essential key to keeping an active youthful body as the years go by. We (Wiseman, Ozzie, the Langs and others) have reason to believe this water enhances every chemical process in the body, making a super immune system and mitigating the symptoms of aging, mostly caused by dehydration.

Dr. Zachary Bush, M.D., on the use of SG Gas (Brown's Gas) in a new health paradigm (2013): www.wateriontechnologies.com/newsletter/ShowNewsletter.aspx?ID=27

---

* DISCLAIMER: I am not a medical doctor and this is not medical advice!

Muscle Relaxation and Pain Relief

HHO

When Brown’s Gas is applied to the skin, hydrogen and oxygen are absorbed which then flows (via the blood) to muscles and joints that have problems due to dehydration, resulting in nearly instantaneous relief of pain caused from cramps and swelling. This relief continues for extended periods of time.

Speed Healing of Wounds

HHO

When Brown’s Gas is applied to a wound, hydrogen and oxygen are absorbed which kills anaerobic microorganisms and assists cell regeneration. Among others, this has been well tested and documented by Korean researcher-inventor Song Doug Kang as shown in official Patents (see International Patent WO2005049051 and other references given in Chapter 20 and Chapter 21).

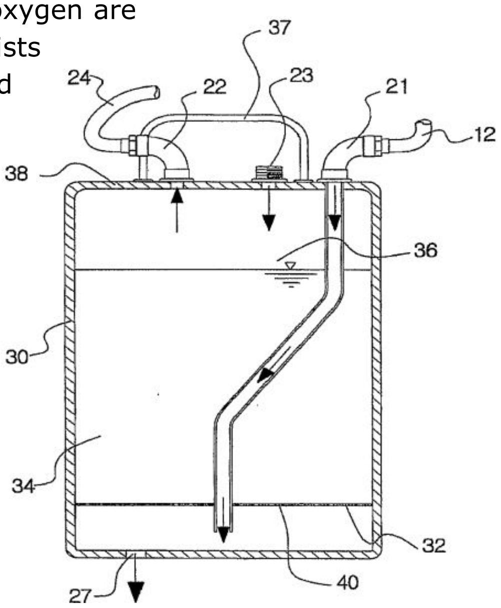

In this patent, published 2005, the inventor lists all the desirable therapeutic results that his experiments with Brown’s Gas have found and demonstrated on real, documented patients:

1. Elimination or alleviation of headache.
2. Elimination or Alleviation of Myalgia [muscle pain].
3. Alleviation of the symptoms of Intervertebral Disc.
4. Prevention of Inflammatory and Allergic Cutaneous [affecting the skin] Reaction.
5. Alleviation of symptoms & pain of Rheumatoid Arthritis, Degenerative Arthritis, etc.
6. Elimination of inflammation in wounded region and body region affected by bacterial inflammation, or rapid recovery of the affected regions.
7. Pain removal or alleviation.
8. Ocular Disease [type of eye disease].
9. Parkinson’s Disease.
10. Lightness and clearness of the head.
11. Lightness of the body and good condition.
12. Disappearance of the dimness and redness in the eyes.
13. Warm hands and feet and perspiration.
14. Good sleep.

FIG. 5A

FIG. 5B

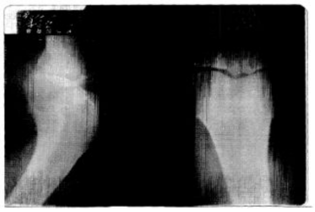

Updates, discoveries, testimonials, protocols and resources by George Wiseman:
-- www.eagle-research.com/cms/category/browns-gas/browns-gas-health-enhancement
-- www.eagle-research.com/cms/node/94 (protocols)
-- www.eagle-research.com/cms/node/566 (video series)

Help Plants Germinate and Grow

HHO, Water

Plants/fish growth can be enhanced by either hydrated water and/or ‘programmed’ (you can say ‘restructured’) water. The resulting plants and fruits are more healthful to eat, providing nutrition and energy that most current produce cannot. www.eagle-research.com/cms/blog/browns-gas/browns-gas-health-enhancement/plants-dont-lie

Transmutation

HHO

Wiseman says “Metals can be made from…water” and thinks this subject is too HOT to touch and I agree, because there’s so much money in such “alchemy” yet reportedly Brown’s Gas can produce materials that did not exist in the samples.

HHO

Inexpensive Toxic Waste Disposal

Brown’s Gas is an implosive flame, with the power to reduce nearly any material to its basic components (usually nontoxic). Chambers can be built to vaporize PCBs (Polychlorinated Biphenyls, toxins that sometimes cause cancer) and other toxic waste. We see such use described in US Patent № 6,630,113 (granted 2003), US Patent № 8,425,637 (granted 2013), etc. – see Chapter 20 and Chapter 21.

HHO

Vastly Increase Recoverable Ore

In tests conducted by several mines, Brown’s Gas treated ore allowed recovery of up to three times more mineral. Brown’s Gas can be used to treat waste dumps of obsolete mines, recovering more mineral than the mine originally produced. **This Waterfuel application alone is worth BILLIONS OF DOLLARS!**

Breathing Gas (Non-Therapeutic)

HHO

UNDERWATER BREATHING GAS: Brown’s Gas is nontoxic and breathable. When used as an underwater breathing gas it allows divers to stay underwater longer and come up faster because the hydrogen does not cause the bends as much as nitrogen or helium. Apart from recreational sports, this would allow much more use of ocean resources since professional divers are very needed even in this age of robots.

BREATHING IN SPACE: This NASA photo shows Astronaut Daniel W. Bursch working on the Russian-made ‘Elektron’ oxygen generator that supplies breathing oxygen on board the International Space Station. The machine is simply an electrolyzer that produces oxygen and hydrogen separately. The hydrogen is vented into space (I guess they have no use for it in outer space). The electricity is taken from the space station's solar panels.

Safe, Economical Room/Boiler Heating

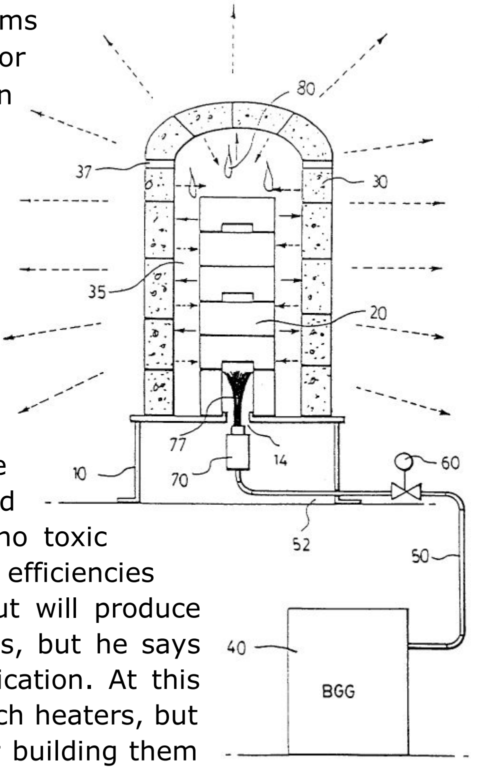

Korean inventor Sang Nam Kim claims in his 2002 Patent № 6443725 "Apparatus →→ for generating energy using cyclic combustion of Brown Gas" that:

> ***"An energy generating apparatus using the cyclic combustion of Brown gas wherein a heat generating unit is heated to a temperature of 1,000°C".***

Generally, Brown's Gas is a poor way to heat space, because the flame radiates very little infrared (heat) energy. However, there is evidence that, using catalytic materials, a Brown's Gas heater can be constructed that radiates huge amounts of heat and does not require any room venting since there are no toxic fumes – important for economy and health alike. The efficiencies stated are 400%. In other words, a 1000 watts input will produce 4000 watts of heat. Wiseman has not yet verified this, but he says he's seen enough evidence to list it as a viable application. At this time of writing I'm not aware of mass-production of such heaters, but several companies offer such heaters or even plans for building them in your garage.

The stove photo from HHOgastechnology.com (Peter Crunk) depicts a growing trend: COOKING WITH HHO for cleaner, safer and cheaper heating of food especially in industrial capacity, as well as for breweries and other food/beverage/vitamin industries.

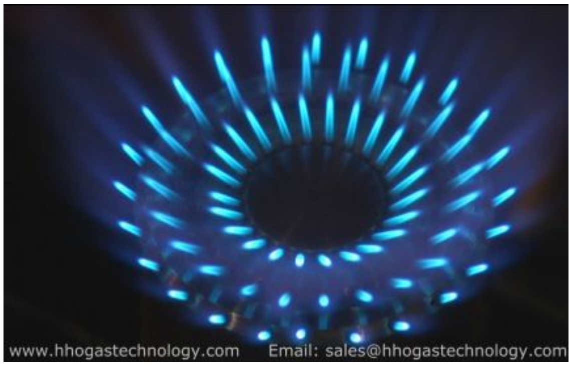

← DVD on how to build an HHO heater. At the time of writing available on eBay and download http://hhohhu.com from the inventors; companies in Eaurope offer DIY info (www.FreeFromFuel.com) and commercial systems (www.HHO-Heating-Systems.com)

Much more information in 0. I dedicated a whole chapter to this application because anyone can relate to it. Also because it involves neither roads/automakers nor the immediate connotation of fossil oils.

Coal-Fired Power Plants

Global Energy Observatory lists 1,442 coal-fired power plants around the world (probably counting only the large ones) while https://corporate.vattenfall.com states that "in 2008 there were over ***8,000*** small coal-fired power plants in China, many with low efficiency and high emission levels". The photo below was taken on February 4, 2017 (~1 pm) by photographer "Huangdan2060". It shows a large coal-fired thermal power plant in Lengshuijiang, Hunan district, China. The plant emits nitrogen oxides, sulfur dioxide, particulate matter, and hazardous pollutants into the air. I'm writing this from Hong Kong, where (in my estimation) at least half a million residents and visitors wear filter masks on a daily basis. My guess is that the residents of Lengshuijiang have no choice but to do the same.

My sisters in Israel are raising their children, between 1000's of other young families, under the fallout from the giant coal-fired power plant in Hadera, Israel. The residents have raised their voices to the point of threatening partial shutdown of the plant, or more correctly choking their growth.

There are many more stories like this around the world. But what would raise even louder voices is when the people would hear about a simple, 100-year old solution – enhance the combustion of those plants by using Waterfuel. And more specifically, Brown's Gas. In his lecture (https://youtu.be/_1iq8XnoMxU) before the 2007 NEXUS Conference in Australia, George Wiseman talks between other applications about EXTERNAL COMBUSTION (go to 30:45 minutes into the video). Brown's Gas, he explains, acts like a catalyst and assists immensely to break down the fuel molecules, reducing the energy that the flame needs to keep burning. Depending on the type of fuel, between 5% (with natural gas) and 50% (with Diesel type oils) of the fuel can be replaced with water. ***However, with coal you can gain even more due to the longer chains of carbons that need to be broken down before efficient combustion can occur.***

Application Level 1: Commercial

- Scientifically Proven
- Significant Commercial Value
- Multiple Manufacturers
- Application Apparatus Developed

NEXUS MAGAZINE in partnership with UAMN TV YouTube Channel

Wiseman states that this application has already been used in Japan and Korea for some period of time (he didn't specify times and names but you can find them in the Patents listed and showcased in this book).

Now, to get into technicalities, HOW MUCH gas is needed, and WHERE exactly would Brown's Gas be fed into a coal-fired power plant?

To answer the first question, it is calculated by BTU – how many thermal units are currently being generated by the core of the plant, the coal burner facility. I don't have the formulas yet but I can tell you the general play between variants, based on a graph handed over from the now inactive company 'Aquygen' founded by Dennis Klein. I could be wrong, but the way I read this graph is as follows:

1. The blue line indicates the maximal temperature that a certain furnace can achieve – IF the coal is well pulverized; this limits the amount of steam generated to create electricity (yes, it's that primitive),
2. Enter Brown's Gas; in this case we don't think in terms of % of coal saved, but how much more heat can be generated by boosting the capacity of the furnace to generate heat, hence pushing the electric power gained from each furnace
3. And all this is done while reducing the soot, ash, smoke, etc. because more of the carbons are converted into heat,
4. Let's jump right into the politics – you don't have to ask the authorities to build as many new plants/chimneys (or not at all in the short run), because at this stage you each one of your units can provide more electricity to more customers – without harming the environment, without paying heavy Carbon Tax, and at very low cost (because you have relatively cheap electricity from which to produce HHO and distillate some water for the process).

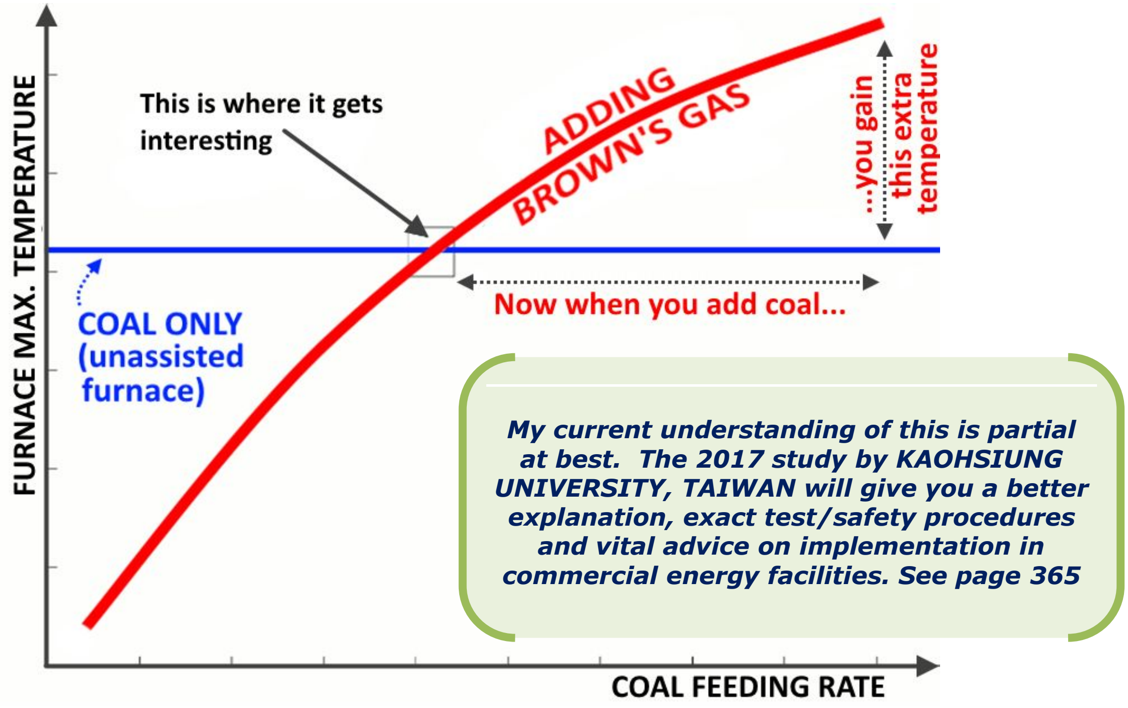

My current understanding of this is partial at best. The 2017 study by KAOHSIUNG UNIVERSITY, TAIWAN will give you a better explanation, exact test/safety procedures and vital advice on implementation in commercial energy facilities. See page 365

ACTION ITEM: Show THIS to your neighbors and then go together to visit whoever needs to change the power plants in your area. Show this to them. Push through their resistance, because coal-fired power plants will be with us for decades, so don't buy excuses like "Next year we will think about our ten-year planning" but tell them that this solution is here and now ***and cheaper than the health damages they will have to pay for inaction.***

Neutralization of Radioactive Waste

In Chapter 25 you will see that Brown's Gas can efficiently neutralize radioactive waste though transmutation[127] right at the reactor thus removing the need for transportation or storage of nuclear waste. ***Such application can revolutionize the nuclear industry.*** Former state assemblyman Dan Haley from New York *investigated the lack of response* after the U.S. Department of Energy observed such demonstration of transmutation. The Department invented numerous excuses after which addressed they finally decided they had seen nothing. The Dept. of Energy argued the following:

1) ***"The radioactivity was encapsulated in the sample"***, even though the sample was crushed and the Geiger counter reading was still the same;
2) ***"The radioactivity must be disparaged into the atmosphere"*** – even though the Dept. of Health preformed in-depth investigation of the environment.

This, much to the frustration of the nuclear physicist performing the research for it, suggested their incompetence. The laboratory was not closed, clearly indicating no radioactivity was found in or around the building. Instead (after 3 months) the government claimed that they had seen nothing.

In Canada, too, says George Wiseman, it has now been officially proven that Brown's Gas can neutralize radioactive waste in seconds, easily and extremely inexpensively. This neutralization treatment can take place right at the nuclear reactor so there is no need to transport or store nuclear waste.


Photo: S. Herman

"This issue is so politically HOT that we deliberately do not promote it," says Wiseman. Brown's Gas technology is not firmly enough in general use to prevent suppression by 'vested interest'. This single application is worth billions of dollars and can revolutionize the nuclear power generation industry. However, Wiseman's company sells an 80+ page report ***"Neutralize Radio-Active Waste"*** – order here: www.eagle-research.com/cms/node/253

Chernobyl and Fukushima disasters have become common knowledge, and everybody agrees that nuclear waste is so horrific and unsolvable, and that's why I stress this critical usefulness of Brown's Gas ***FOR THE NEUTRALIZATION OF RADIOACTIVE WASTE.***

The frame below is an abstract from an important 1996 publication by a large organization called **The Planetary Association for Clean Energy, Inc.**, founded in 1975 and headquartered in Ottawa, Ontario (Canada). Apart from branches throughout Canada, they have branches in Argentina, Australia, Austria, Belgium, Brazil, Bulgaria, Chile, Congo, Costa Rica, China, Denmark, France, Germany, Greece, Hungary, India, Italy,

---

[127] Transmutation: conversion of one chemical element or isotope into another.

Japan, Kenya, Malaysia, Mexico, Netherlands, New Zealand, Norway, Poland, the Philippines, Romania, Russia, Serbia, Singapore, South Africa, South Korea, Sweden, Switzerland, Ukraine, Turkey, UK and USA.

The Planetary Association for Clean Energy, Inc.

An international collaborative network of advanced scientific thinking

Advanced transmutation process and its application for the decontamination of radioactive nuclear wastes

By Andrew Michrowski (President, Planetary Association for Clean Energy, Inc.) and
Mark Porringa (former chief engineer of Chalk River Laboratories, Atomic Energy of
Canada Limited – one of the world's largest research reactors)

ABSTRACT:

There are deviations to the standard model of radioactive atomic nuclei decay reported in the literature. These include persistent effects of chemical states and physical environment and the natural, low-energy transmutation phenomena associated with the vegetation processes of plants. The theory of neutral currents is proposed by Nobelist ***O. Costa de Beauregard*** *to account for the observed natural transmutations, also known as the Kervran reaction. "Cold fusion" researchers have also reported anomalies in the formation of new elements in cathodes. This body of knowledge provides the rationale for the observed and successful and developed* ***advanced transmutation processes for the disposal of nuclear waste developed by Yull Brown involving a gas developed by him*** *with a stoichiometric mixture of ionic hydrogen and ionic oxygen compressed up to 100 psi. Another procedure, still in experimental stages, involves the environmental interaction of non-Hertzian electromagnetic fields and targeted radioactive samples.* ***In both methods, the radioactivity in samples decreases by up to 97% rapidly and at low cost.***

This is an abstract from an extensive publication backed up by 30 scientific papers. I highlighted it because I believe it indicates a revolutionary application of Waterfuel that must be looked at for the sake of Planet Earth. Read more:

- http://www.rexresearch.com/brown-haley/brown-haley.htm
- http://www.rexresearch.com/fukushimamour/fukushima.htm

Additionally, in Chapter 20 you can find a number of US Patents and World Patents on the subject of neutralizing or deactivating of radioactive material – using Brown's Gas. Have a look, inform others. More data in Chapter 25.

Surface Treatment of Materials

When a Brown's Gas flame is played over the surface of materials, there are effects that can be beneficial. Iron becomes rust resistant, and can be ***surface hardened*** to prevent wear. Brick and cement become corrosion and water proof. Acrylic surfaces roughed by sawing can be smoothened with Brown's Gas, its most visible advantage being the cleanliness of the flame.

Industrial

www.WaterTorch.com lists many industrial uses: adhesive drying; annealing, brazing; cable stripping; casting (die and investment); cutting; creating semiprecious stones (example: manufacture rubies); energy storage; epoxy curing; flame cutting – directly cutting metal, plastic sheets, hard rods and hard fibers (also: adding oxygen to flame cutting); flame drilling; flame polishing of glass, plastic, quartz and ceramics; gouging; heat shrinking; molding with heat; neutralizing radioactive waste (discussed above); ore/mineral refining, separation & manufacture; plasma spray; preheating; pressure/vacuum pump; freeze drying; distillation; sintering; soldering (all types); tempering; toxic waste neutralization; underwater cutting & heating; welding of precious metals, quartz, copper, aluminum, glass, wax, cast iron, plastics, etc.

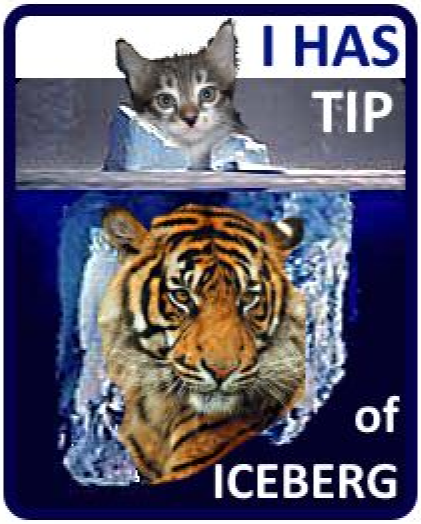

Advantages of Welding, Brazing, Cutting and other Metal/Glass/Plastic Works with Brown's Gas

Economy

Reducing Acetylene costs by as much as 90%. George Wiseman says that Brown's Gas costs only pennies per hour to operate. Time is saved, too. For example, iron cutting time is reduced by about 30% when compared with other industrial gases, due to enhanced oxidation. Welding is faster too.

Operational Safety

Since Brown's Gas is lighter and dissipates rapidly into the air in the working space, it is much safer than acetylene which is dense and seeks ground level – where it accumulates and may very easily ignite from a spark or even from the torch itself!

A Healthier Working Environment

No carbon emissions (as this is not carbohydrate fuel) and no toxic fumes emitted by the process.

Environmentally Friendly

Rather than polluting the environment like all hydrocarbon-based fuels and gases do, Brown's Gas produces zero pollution when made and when burned.

Industries that can Profitably use Brown's Gas

According to Eagle-Research Ltd. http://www.watertorch.com/industry/indus1.html

1. Artists
2. Automotive
3. Bridge building / repair
4. Ceramics
5. Construction
6. Dental
7. Electromechanical
8. Electronics
9. Fabrication (light and heavy)
10. Glass
11. Instruments
12. Investment Casting
13. Jewelry
14. Laboratories
15. Maintenance
16. Manufacturing
17. Marine
18. Military
19. Mining
20. Oil (rigs, pipelines, refining etc.)

21. Optics
22. Plastics
23. Petroleum
24. Power plants
25. Recycling
26. Refineries
27. Refrigeration
28. Repair
29. Salvage
30. Schools / Universities / Colleges
31. Semiconductor
32. Shipping
33. Shipyards / ship building
34. Solar Cells
35. Thermocouples
36. Tool and Die Makers
37. Waste disposal.

Andrew Michrowski lists the full scope of Brown's Gas ***industrial uses,*** many of which not mentioned above: *air conditioning and cooling, atmospheric motors, cleansing of smokestack, coal to oil conversion, curing,* deep-sea life support, destruction of toxic wastes, *drying of fruit and legumes*, fuel cell, glazing and *kiln operation, graphite production*, heating, hydrogen production, *mineral separation,* nuclear waste decontamination, ore separation, oxygen production, production of hard materials, production of electricity, pure water production, *silica conversion*, space life support, *underwater welding, vacuum systems, water pumps,* welding and brazing.

[source: www.svpvril.com/svpweb9.html]

Water as LIQUID

Water Cavitation

For nano-level precision of cutting, welding, etc., a different energy-from-water can be used. Water Cavitation takes the natural phenomenon of air bubble cavitation (violent collapse, to say it simply) and extracts energy out of it. The technology and its products are presented in Chapter 16 and Chapter 12.

PHARMACEUTICAL – Medical/Cosmetics Ampoule Processing is Clean, Economical, Eco-Friendly

HHO

When I discovered this new combination of HHO and a well known manufacturing process, I learned twice: (1) that a new application exists that we should be aware of, and (2) that there will probably be more new and surprising uses for HHO and all Waterfuel. In this case, the design was quite simple. Medical ampoule sealing with clean (and expensive) medical-grade gas is nothing new, and various machines have been developed for the pharmaceutical and cosmetics industries to use. Attaching an HHO generator to these machines was only a matter of time. Well, merely a matter of one bright idea, really.

Google "ampoule filling machine", you'll find them all. The image is from a 2016 press release by ReAgent, a well-known chemical manufacturing company based in Cheshire, UK (www.ReAgent.co.uk)

I didn't ask ReAgent if they use HHO because it's not for them – this method is for the actual ampoule maker, the cosmetics or pharmaceutical company. Such a machine takes an input of (very) clean flammable gas and basically all you do is supply that input with HHO. The ampoule maker will appreciate the complete absence of smoke and other pollutants that nobody wants in their medical ampoules and high-profile cosmetic products. This idea came from several Waterfuel machine makers from Asia who are now offering this innovation to the pharmaceutical industry.

Can HHO really clean an engine in low liter-per-minute applications?

In 2006 Tom Lang installed a simple vaporizer in my 20-year old Ford Bronco-II, and my engine started NOTICEABLY cleaning itself while driving back home! A couple years later I received this unsolicited letter from the Hungarian **Water4Gas** experimenter Zoltan Kémeri-Greguss. He attached the photos as proof of his experiment (HHO, not vapor):

> *"That is true! **Water4Gas** technology is advertised as a technology, which helps to clean your engine. Is it a foolish advertisement? No, it is not. **Water4Gas** really helps your engine to be cleaned. These photos has been sent as an evident of this fact. These spark plugs has been used for 30,000 km in an Opel. You may see that the spark plugs are clean, there are no contaminations either outside and inside."*
>
> *"Imagine, the other structures inside cylinders may also be cleaned by **Water4Gas** device!"*
>
> *Zoltan Kémeri-Greguss (Hungary), water4gas-eu.com*

Today there are modern, industrial-strength machines for this Waterfuel application, that can clean an entire engine in 20-40 minutes without any installation.

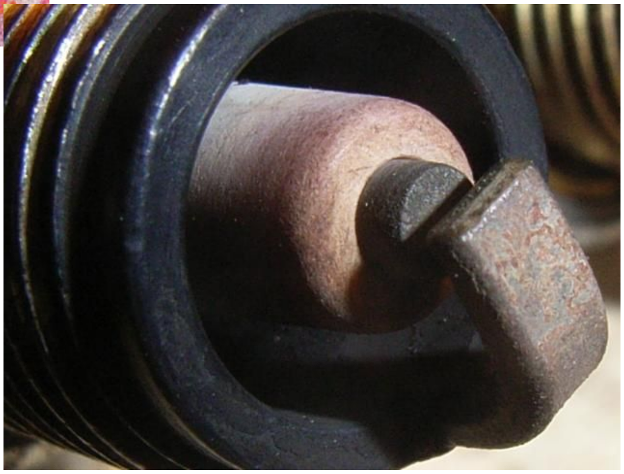

ENHANCE COMBUSTION!

Fuel Enhancement with Supplemental Hydrogen*

* *Hydrogen FROM WATER as a preferred source, but that's not the point in this particular use. The focal point is the effect of hydrogen (not necessarily HHO) on combustion.*

HYDROGEN

Hydrogen affects the burn rate of fuels and lean combustion capabilities of internal combustion engines. Australian inventor and researcher, Prof. Yull Brown (1967-1970) converted cars to run on Brown's Gas and/or a mixture of gasoline and Brown's Gas. In his last known interview (available on DVD www.NotTaughtInSchools.com) he said:

> ***"I show results. Many people make claims, but don't produce. Drawings and blueprints look nice in books on the shelf but not in the real world."***

HHO

Enhancement of *Any* Combustion (Boiler, Turbine, etc.) with Brown's Gas

Brown's Gas has been proven to help burn water/fossil-fuel mixtures in a ratio of up to 90% water (see Chapter 21). This works in internal AND external combustion (space heating, boiler rooms, factories, electrical power plants, more).

Brown's Gas can also be used to enhance the combustion of other mixtures, e.g., air/coal mixtures. I've encountered a U.S. company offering Brown's Gas for enhancing the combustion of coal. The application, according to their spec sheets, does not reduce the amount of coal needed, but rather causes an interesting phenomenon where the temperature of the furnace rises above it normal limit. This in turn enables the extraction of more heat (usually used to make steam) out of the same tonnage of coal.

HHO/ Hydrogen

Extend the Lean Limit* of Internal Combustion Engines

* *How "lean" (see Glossary) you can go and still have good combustion.*

In 1974 NASA stated (see Chapter 13 above) that supplementing combustion with small quantities of hydrogen (mixed with the air) can extend the lean limit due to "the extremely low lean flammability limit of hydrogen." It can be done with Brown's Gas, too. *The actual lean limit depends on the application – and differs greatly between INTERNAL combustion (engine, pressurized furnace, etc.) and OPEN AIR combustion.*

HOW LEAN CAN YOU GO?

By Ozzie Freedom, ca. 2012

$$\frac{25}{2}O_2 + C_8H_{18} \rightarrow 8CO_2 + 9H_2$$

$$FAR = \frac{1}{AFR}$$

$$AFR = \frac{m_{air}}{m_{fuel}}$$

$$\lambda = \frac{AFR}{AFR_{stoich}}$$

$$C_2H_6 + \frac{7}{2}O_2 \rightarrow 2CO_2 + 3H_2O$$

$$\phi = \frac{\text{fuel-to-oxidizer ratio}}{(\text{fuel-to-oxidizer ratio})_{st}} = \frac{m_{fuel}/m_{ox}}{(m_{fuel}/m_{ox})_{st}} = \frac{n_{fuel}/n_{ox}}{(n_{fuel}/n_{ox})_{st}}$$

$$\frac{n_{C_2H_6}}{n_{O_2}} = \frac{1}{1} = 1$$

$$\frac{m_{C_2H_6}}{m_{O_2}} = \frac{1\cdot(2\cdot 12 + 6\cdot 1)}{1\cdot(2\cdot 16)} = \frac{30}{32} = 0.938$$

$$Z_{st} = \frac{\lambda}{1+\lambda} = \frac{1}{1+AFR}$$

$$\phi = \frac{1}{\lambda}$$

$$(\text{fuel-to-oxidizer ratio based on mass})_{st} = \left(\frac{m_{C_2H_6}}{m_{O_2}}\right)_{st} = \frac{1\cdot(2\cdot 12 + 6\cdot 1)}{3.5\cdot(2\cdot 16)} = \frac{30}{112} = 0.268$$

$$(\text{fuel-to-oxidizer ratio based on number of moles})_{st} = \left(\frac{n_{C_2H_6}}{n_{O_2}}\right)_{st} = \frac{1}{3.5} = 0.286$$

$$\phi = \frac{n_{C_2H_6}/n_{O_2}}{(n_{C_2H_6}/n_{O_2})_{st}} = \frac{1}{0.286} = 3.5$$

$$Z = \left[\frac{Y_{O,0}\cdot W_F\cdot v_F}{1 + Y_{F,0}\cdot W_O\cdot v_O}\right]$$

$$\phi = \frac{m_{C_2H_6}/m_{O_2}}{(m_{C_2H_6}/m_{O_2})_{st}} = \frac{0.938}{0.268} = 3.5$$

$$\text{Volume\% } O_2 \text{ in propane combustion gas} = -0.1208(\%\text{ excess } O_2)^2 + 0.186(\%\text{ excess } O_2)$$

$$\text{Mass\% } O_2 \text{ in propane combustion gas} = -0.1433(\%\text{ excess } O_2)^2 + 0.214(\%\text{ excess } O_2)$$

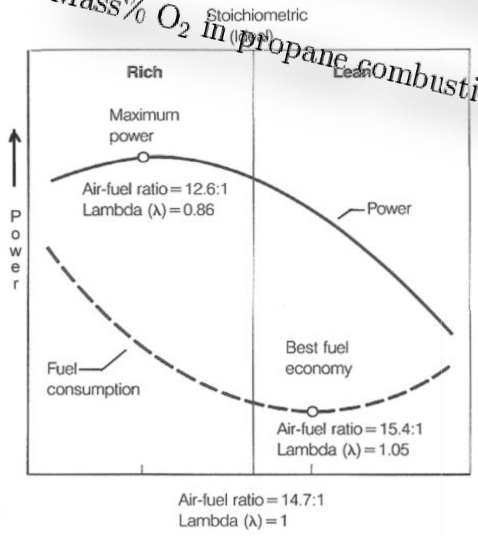

An impressive array of formulas to try and calculate the "perfect" air/fuel ratio. How useful are they once Waterfuel enters the scene?

Simple definition: The engine works on AIR+FUEL. "Lean" means less fuel (the costly stuff) and more air (the cheap stuff). The "leaner" we can go, the happier the budget.

What does "Stoichiometric" mean?

This is one of those "big words" that fly over your head. You may have seen it said about air-fuel ratio, and automotive experts always say the **Stoichiometric** value is 14.7-to-1 for air-gasoline mixture or 14.6-to-1 for air-Diesel fuel mixture. These numbers sound very finite, don't they? I mean, not a wink in any direction, no range, nothing. A finite number.

The English dictionary says **Stoichiometric** means "having its component elements present in the exact proportions indicated by its formula." I think it's a pompous make-believe term that was made to impress upon you that air-fuel ratios are very calculated, very scientific and absolutely finite. They're not. NASA, General Motors and others discovered in 1974 (and repeatedly ever since) that this ratio can be extended (more air, less fuel) by adding small amounts of hydrogen to the air.

I forced my Toyota engine to go much leaner than 14.7 (roughly 25-30:1) and many others have done this and even much, much leaner. Official numbers are arbitrary, to say it gently. In more harsh words, I strongly believe the term **"Stoichiometric"** is a hoax when referred to the air-fuel mixtures of internal combustion engines.

Despite the compelling evidence and 1000's of Patents/science pages, some skeptics still believe that everything Waterfuel is a hoax. If you came here looking for THE hoax, the champion of all energy hoaxes, then you just found it! The essence of the hoax is the statement, supported by the pile of impressive-looking formulas shown above, that basically says: "We've got it down to a finite science and there's nothing you can do about it. Surrender!"

The only true stoichiometric ratio is nature's creation of water: $H_2 \div O_1$

Engineers state that (depending on engine type) ***the mixture can be as lean as 65:1***

> ***"The results show that it is possible to achieve 100% ignitability with overall air-fuel ratios*** *in excess of 50* ***and much faster burn rates..."***

Quoted from "An Approach to Charge Stratification in Lean-Burn, Spark-Ignition Engines." Published in October 1994 by SAE (Society of Automotive Engineers), SAE Paper number 941878. Read more: http://papers.sae.org/941878/

> ***"Lean combustion basically means that the engine has excess air introduced into it along with the fuel. By reducing combustion temperature, the extra air cuts down significantly on the amount of NOx produced. Further,*** *additional power is produced due to the presence of more oxygen."*

This isn't about petty engines. This quote is from the highly professional magazine **'Cogeneration and On-site Power Production'** that talks about very large heavy-duty engines, the likes of Caterpillar 3500 Series and Rolls-Royce KV-G4.

Read more at: http://www.cospp.com/articles/print/volume-8/issue-1/features/engines-for-power-development-focuses-on-lean-burn-and-biofuels.html

"Lean-mixture-ratio combustion in internal-combustion engines has the potential of producing low emissions and higher thermal efficiency for several reasons. First, excess oxygen in the charge further oxidizes unburned hydrocarbons and carbon monoxide. Second, excess oxygen lowers the peak combustion temperatures, which inhibits the formation of oxides of nitrogen. Third, the lower combustion temperatures increase the mixture specific heat ratio by decreasing the net dissociation losses. Fourth, as the specific heat ratio increases, the cycle thermal efficiency also increases, which gives the potential for better fuel economy."

"The results were used to explain the advantages of adding hydrogen to gasoline as a method of extending the lean operating range. The minimum-energy-consumption equivalence ratio was extended to leaner conditions by adding hydrogen, although the minimum energy consumption did not change. All emission levels decreased at the leaner conditions. Also, adding hydrogen significantly increased flame speed over all equivalence ratios."

From: NASA Technical Note D-8487, published March 1977
Lewis Research Center, National Aeronautics & Space Administration,
Cleveland, Ohio (USA)

"Hydrogen-supplemented fuel was investigated as a means of extending lean operating limits of gasoline engines for control of NOx. Single-cylinder engine tests with small additions of hydrogen to the fuel resulted in very low NO$_x$ and CO emissions for hydrogen-isooctane[128] mixtures leaner than 0.55* equivalence ratio."

* Since the fuel octane here is 100, this does not compare directly to your gas-station gasoline. But it's a big difference because immediately in the next sentence they state that ***"Significant thermal efficiency improvements resulted from the extension beyond isooctane lean limit operation."*** The NASA research from 1974 (John Houseman & D.J. Cerini) calculated that the air-fuel ratio can be extended all the way up to ***340*** because that's the upper lean limit of mixing gasoline/hydrogen with air. If Brown's Gas is 3 times more potent than gasoline, can its mixture be leaned to 1000? I wouldn't even try to calculate it – I'd let the engine speak; in other words, I see the REAL **"stoichiometric"** in what the ENGINE "says" in real life rather than numbers on paper; you'll find experienced mechanics agreeing.

Source: "Emission Control With Lean Operation Using Hydrogen-Supplemented Fuel"
Authors: R.F. Stebar & F.B. Parks – ***General Motors Corporation***
Document Number: 740187, published February 1974
Download: http://www.sae.org/technical/papers/740187

This book has similar references that you can find woven between the many Patents and research papers. If you have the electronic version search the book for 'lean' and 'ultra-lean' or 'upper lean limit'.

---

[128] Trimethylpentane (isooctane): a standardized hydrocarbon fuel with the octane rating of 100.

THE 14.7:1 AIR:FUEL MIXTURE LIE

By George Wiseman, May 18, 2011

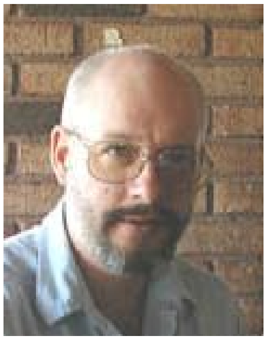

One LIE exposed

I often get asked **"How far it is possible to travel on a gallon of gasoline?"**

The short answer is ***"A lot farther than most people think!"***

I have written several books (and am writing several more) to answer that question. Here's a free preview of my upcoming eBook "Double Mileage, Guaranteed": http://www.eagle-research.com/cms/node/3921?a=5

There are a lot of facts that are not generally known and **in this blog I'll give one example**... and a few of my pet peeves for spice ;)

Remember as you read this, and begin to understand that **double or triple mileage is possible** (for anyone) **and practical** (if implemented at the OEM level), ***that around 60% of the oil that the USA currently 'consumes' comes from outside its borders***.

Not only are you paying for twice as much fuel as you need to, but the USA could be 100% energy independent (within its own borders) in less than two years if very simple technologies ***that have been known for over 100 years*** were implemented now.

The cost of implementation of EXISTING practical high mileage technology (even if 100% financed by the government) would be **LESS than the cost of the wars** the USA fights to preserve its 'right' to cheap oil.

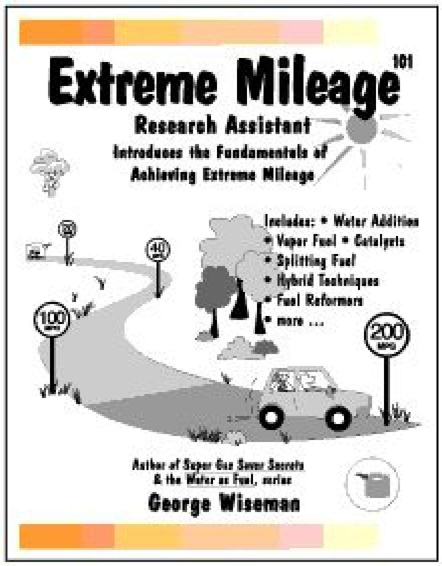

From my book 'Extreme Mileage, 101' (http://www.eagle-research.com/cms/node/223):

"The 14.7:1 air:fuel ratio is **one example** of the many facts that have been 'skewed' and/or 'mis-used' by the Vested Interests as part of their methods to ***prevent competent people*** from developing the means to go over 200 miles on a gallon of fuel. The last 200+ MPG inventor that was able to go public before being suppressed was *Charles Nelson Pogue,* a Canadian" (Google him for more details).

The sad fact is that we have been taught several lies for over a century; the **particular lie I'm addressing here** is that gasoline ***internal combustion engines*** require a 14.7:1 air:fuel (by weight) ratio.

This is true for EXTERNAL combustion
but it is NOT true for INTERNAL combustion

And this is *easily proven false* if a person does ***one simple calculation,*** which I'll show you below.

This simple calculation is NOT REVEALED to mechanics. It is **cleverly avoided** during all instruction. ***It helps that most mechanics don't really like math***, so don't go looking for inconsistencies in what they are taught.

I call the 14.7:1 air:fuel ratio a LIE because there is NO reason for this knowledge to be withheld from mechanics (or the public) ***EXCEPT to keep them from understanding that high mileage is possible***.

This is lying by miss-applying facts and lying by not telling the whole truth.

I was shown this math by a brilliant high mileage researcher named Allen Wallace back in the 70's. **This proof is so simple, so easily proven and once known, so obvious *that the ONLY explanation for it NOT to be taught is that it is deliberately avoided*.**

I'll walk you step by step through the simple calculation, so you can prove, **using any vehicle of your choice,** that you have been (***and are being***) lied to.

Forgive your mechanic and/or teachers for not knowing this, **they were taught the lie** and quite literally do not know the truth. Once a mechanic starts working 'in the trade', they have a vested interest in continuing the lie:
http://fuel-efficient-vehicles.org/energy-news/?p=959

See if you can persuade them to do this simple calculation using any vehicle of their choosing; you'll see how **they'll do just about anything to NOT do this calculation!** They are afraid to do anything that might prove their training (indoctrination) wrong!

You can use high school math to calculate your actual Air:Fuel Ratio (AFR)

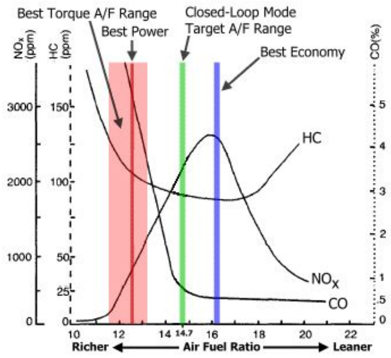

Gasoline internal combustion is normally considered stoichiometric at 14.7:1 air:fuel ratio by weight: http://en.wikipedia.org/wiki/Air-fuel_ratio

The 14.7:1 AFR is true for external combustion (which is why the 'chart' is generally used to 'prove' the lie). This is lying by miss-applying a fact, because this ratio (chart) is NOT true for internal combustion, as you will soon see...

To calculate your ACTUAL AFR you need to know:

1. The engine's displacement, in cubic inches (convert from liters: http://www.metric-conversions.org/volume/liters-to-cubic-inches.htm).
2. The engine's RPM at 60 MPH (use a tachometer)
3. The GPH at highway speeds (60 MPH ideally, it just makes the math easier). If you know your MPG at 60 MPH, you can calculate GPH (people using metric will need to convert, I haven't done a metric example yet).
4. Your engine's Volumetric Efficiency (VEA) at RPM of 60 MPH (most can assume 70%). If you want to know your VE exactly, calculate it using the method below.

All vehicles have a speedometer, quite a few have a tachometer but few have an MPG (or GPH) gauge, or MAP (or vacuum) gauge or intake air temperature gauge or humidity gauge… so until recently it has been a challenge for the average mechanic (even if he was so inclined) to calculate the actual AFR of any particular vehicle. Thus the LIE has remained hidden…

Modern technology has made it easy to calculate ACTUAL AFR for most vehicles that have an OBD-II port.

You can buy a 'reader' like the Scan Gauge (https://www.scangauge.com/) that will tell you simultaneously the:

1. MPH,
2. RPM,
3. GPH,
4. MAP
5. IAT

Make sure your Scan Gauge's MPH matches your vehicle speedometer at 60 MPH (if it doesn't, you can calibrate the Scan Gauge (I also check my speed with my GPS).

Also it's a good idea to set your engine displacement and run a few tanks of fuel through your vehicle, so you can calibrate your Scan Gauge, so that its estimated fuel usage and your actual fuel usage match.

Then set the Scan Gauge for IAT, RPM, GPH, MAP and go for a drive on a flat road with no wind.

Once you hold a steady 60 MPH (using the vehicle's speedometer) for a few minutes, simultaneously record the IAT, RPM, GPH, MAP.

See the 3 minute video of me using the scan gauge (www.youtube.com/watch?v=uFrLPKBi-0A) to find real world RAW data using my wife's 2008 Aveo 5, which has electronic fuel injection. Engine E-TEC II[129], 1.6 L (97.638 cu in) DOHC[130] I4[131] – with 5 speed manual trans. Also watch https://www.youtube.com/watch?v=qcpm5k_OSJk

Finally, go to your local weather station (I could access mine online) and get your local weather report (you need this to calculate Volumetric Efficiency).

You'll need local temperature, pressure (hPa or mb) and air humidity %. My current local weather is here: www.pentictonwx.com

Calculating Volumetric Efficiency

Before calculating your ACTUAL AFR, you will need to know your engine's Volumetric Efficiency. The below calculation will get you pretty close.

I've included some conversion calculator links to assist you.

Convert the Scan Gauge readings to the same scales as the local weather measurements, so you can calculate the efficiency ratio.

Convert psi to hPa with pressure conversion calculator
http://www.sensorsone.co.uk/pressure-units-conversion.html

Convert °F to °C
http://www.unitconverters.net/temperature/fahrenheit-to-celsius.htm

Calculate ambient air density using temperature (°C), barometric pressure (hPa or mb) and humidity %:
www.brisbanehotairballooning.com.au/faqs/education/116-calculate-air-density.html

---

[129] http://en.wikipedia.org/wiki/E-TEC_II

[130] http://en.wikipedia.org/wiki/DOHC

[131] http://en.wikipedia.org/wiki/Straight-4

My wife's Aveo 5 Scan Gauge recorded:

- @ 60 MPH
- 8.9 MAP (intake manifold absolute pressure in psi) = 613.63 hPa
- 39°F IAT (intake air temperature) = 3.89°C
- 1.76 GPH
- 2630 RPM.

The weather station tells me:

- There's no wind,
- 1.9°C
- 1009 mb (barometric pressure), and
- 66 % humidity.

Intake manifold = 3.89°C, 613.63 hPa, 66% humidity = 0.7691 kg/m3
Local ambient = 1.9°C, 1009 hPa, 66% humidity = 1.2758 kg/m3
0.7691 / 1.2758 = 0.60% VE

Convert kg/m^3 to lb/ft^3
http://www.engineeringtoolbox.com/density-converter-d_1038.html

1.2758 kg = 0.0796 lb/ft3 weight / density of local ambient air.

Now Let's Do The AFR Calculation

I traveled on a flat road in near calm wind on the morning of February 18, 2014. I used a scan gauge (previously calibrated).

1. We multiply 97.638 cubic inches * 0.60 (volumetric efficiency) to get the actual air sucked in per engine displacement = 58.58 (cubic inches).
2. We divide 2630 RPM by 2 to get the amount of air the engine's cylinders (displacement) sucked in air/minute = 1315.
3. We multiply 58.58 (actual air per displacement) * 1315 (intake displacements per minute) = 77032.7 (cubic inches of air per minute).
4. We multiply 77032.7 * 60 (minutes) = 4621962 cubic inches of air per hour.
5. We divide 4621962 by 12 by 12 by 12 to get 2674.75 cubic feet of air per hour.
6. We multiply 2674.75 * 0.0796 (ambient density of ft3 of air) = 212.91 lbs of air per hour.
7. We multiply 1.76 * 6.073 (weight of US gallon of gasoline) = 10.69 lbs of fuel per hour.
8. Finally, we divide 212.91 by 10.69 to get 19.92:1 actual AFR.

19.92:1 actual AFR!

This is with the engine under load, driving normally at 60 MPH!

Yes, I know that the fuel mixture varies all the time from ‘rich’ to ‘lean’ and lean is leaner than 14.7:1, but check the AFR charts... They’ll tell you that gasoline will NOT combust properly at 20:1 unless ‘lean burn’ technology is used.

(I’ve heard of 60:1 with ‘extreme lean burn’ technology but doesn’t that just further make my point that 14.7:1 is a lie?).

I assure you the Aveo doesn’t have any kind of ‘lean burn’ technology installed; it is 100% stock at the time of this test.

What do you think is going to happen to the AFR when I cut the fuel consumption by at least 50% while maintaining full power / performance and decreasing both exhaust temperature and all pollutants?

INTERNAL combustion engines COMPRESS the mixture which, among other factors, move all the molecules closer together, allowing leaner mixtures to be burned.

True it’s NOT a stoichiometric mixture but it doesn’t NEED to be. It’s OK if there is excess oxygen as long as the fuel is completely burned at the correct time to convert the heat energy to mechanical energy.

~ This is one of the facts not taught to mechanics and a KEY piece of knowledge for achieving high mileage.

Even the government (EPA) posts that only 39% to 45% of the fuel is burned in the engine, the rest being burned in the catalytic converter… So aren’t they saying my wife’s Aveo 5 is actually burning a 39.83:1 AFR? I’m thinking these people need to get their lies straight… But wait… Lies can never be straight 😮.

General Example:

Let’s make a general example of a 350 ci[132] engine, running 2000 rpm at 60 MPH and 70% volumetric efficiency (volumetric efficiency is how much air actually makes it into the cylinders); the vehicle is getting 15 MPG at 60 MPH.

Remember, with a four stroke engine, that air is sucked into the cylinders only once every two revolutions; so 2000 rpm is only 1000 intake strokes per minute.

The engine would pump (((((350*0.70)*1000)*60)/12)/12)/12) = ?? cubic feet of air per hour. (A mechanics instructor once told me an internal combustion engine is mainly an air pump).

At STP[133] a cubic foot of air is approximately 0.0807 lbs; so this engine would pump 784 pounds of air an hour: http://www.physlink.com/education/askexperts/ae650.cfm

---

[132] Cubic Inch

[133] Standard Temperature and Pressure

In average conditions a US gallon weighs about 6.073 lbs:
http://en.wikipedia.org/wiki/Gasoline

This 350 ci engine, running at 2000 rpm @ 60 MPH and getting 15 MPG would use 4 gallons of gasoline in an hour. 4*6.3 = 25.2 pounds of fuel per hour. Using the above givens, the engine is using (784/25.2) = 31:1 air:fuel ratio by weight. This is under load, not just idling!

So, you can see that 'normal' combustion (which actually wastes 90% of the fuel) in a ubiquitous 350 ci engine IS ALREADY and ACTUALLY over 31:1, even before applying 'lean burn' or combustion enhancement technology.

This is why I tell people that the 14.7:1 ratio is a LIE when applied to internal combustion.

NOTE: The 350 ci engine example above was with a carburetor (I consider carburetors to be equivalent to a toilet bowl, flushing fuel into an engine). Electronic Fuel Injection has the potential to be MUCH more efficient than a carburetor, but the potential ISN'T being used.

BTW, it's pretty easy to get a 350 ci engine to be doing 25 MPG (without hybrid technology) by just gearing it up (that makes a 51.85:1 air:fuel ratio) and it's definitely possible to get 200 MPG with no loss of power or performance using vapor fuel technology that was proven by FORD in the 1940's)...

Imagine what 200 MPG does to the mythical 14.7:1 air:fuel ratio.

See my book 'Extreme Mileage, 101' for more details on how my brother and I achieved over 200 MPG in that 1/2 ton pickup truck.

So... how does this knowledge help YOU?

The high mileage and fuel efficiency concepts concealed by this LIE are vital to know ***if you are to REALLY go farther on a gallon of gasoline***... or help your customers save fuel.

1. Because ***once you know*** that you have been taught a LIE, (I hope) you will be more willing to examine the rest of the truth. There are lots more FACTS that you were NOT taught. Also you should be more willing to ***ignore ignorant*** skeptics that are vested in the LIE.

2. Because once you see that internal combustion air:fuel ratios are ALREADY much leaner than 'officially' admitted (read all about 'High Mileage Carburetors' by Charles Pogue and others http://fuel-efficient-vehicles.org/energy-news/?page_id=785), you raise the next questions like... ***"What really happens in a combustion chamber?"*** and ***"Are there ways to further increase combustion efficiency?"***

The answer to the first question has been well researched. The bottom line is that ***only the portion of gasoline that is vapor,*** when the spark plug fires, ***is the fuel that is actually converted into mechanical power*. This is another of the KEY points NOT generally taught to mechanics**. It's the same with diesel fuel, it must be converted to vapor and mixed with oxygen before it can combust.

> *NOTE: Timings below were calculated for a 292 ci straight-6 GMC engine at 2000 rpm, but are generally applicable for all reciprocating piston internal combustion engines.*

Conventionally, only about ***10% of the gasoline is vapor*** when the spark plug fires... Because of the way the piston, connecting rod and crankshaft all interact, the combustion **must be completed** within 5 to 7 milliseconds (from ignition BTDC[134]) for the resulting pressure from the heat energy to be efficiently converted to mechanical energy. ***Only gasoline in its vapor state, already mixed with air, can combust that fast.***

The liquid portion of the fuel is wasted. ***In fact, worse than wasted***... During the 'initial' combustion, the liquid fuel does vaporize and mix with air (takes about 25 milliseconds) and then combusts too late to be converted into mechanical power.

In fact, because the exhaust valves open about 30 milliseconds after ignition, this 'secondary' burning fuel would then be burning out past the exhaust valves. ***This is why mechanics are taught that if you 'lean out' the fuel mixture you will burn out the exhaust valves.***

The 'conventional' way 'they' solve this 'late' combustion overheating is to pump EXTRA liquid fuel into the engine to QUENCH the combustion (when the 'extra' liquid turns to vapor it makes the fuel mixture too rich to continue burning).

Then 'they' **burn all the excess fuel in the exhaust** (using catalytic converters) ***where the fuel's heat can't possibly be converted to mechanical power.***

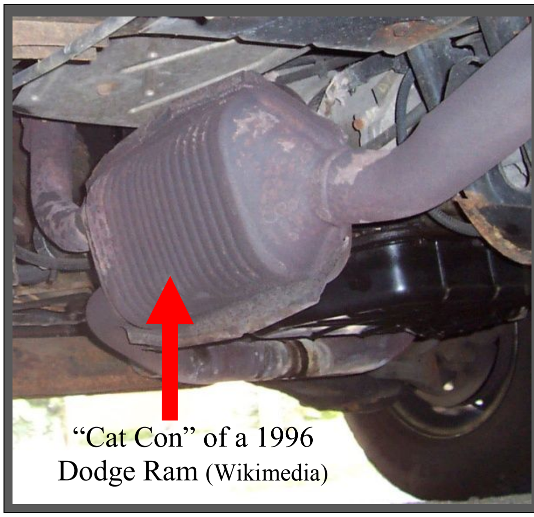

"Cat Con" of a 1996 Dodge Ram (Wikimedia)

Catalytic Converter (Cat Con)?????

Look – the name itself is a CON job! Do you see it? Its name is TECHNICALLY correct, but its truthful name should be 'Destroyer of Unburned Fuel' (DUF) – and then even non-techies would start questioning its very existence, they'll be asking their mechanic: ***"What did you just say? Destroyer of unburned fuel??? What unburned fuel???!!! And why the heck would you want to destroy my fuel?!"***

And we don't like people asking hard questions.

Or do we?

~Ozzie, June 2017

---

[134] Before Top Dead Center, the point where the combustion chamber reaches its minimum size.

There is so much fuel in the exhaust of 'normal' engines that I have successfully run engines using the exhaust of other engines as the fuel.

Catalytic converters are a pet peeve of mine... they use up hundreds of tons of precious metals (like platinum) for NO REASON other than to burn excess fuel outside of the engine. These precious metals could be better used to make highly efficient fuel cells, allowing vehicles to be converted to true hybrid electric and achieve (if done properly) 400+ MPG.

Note: Late combustion heat, ***if one chooses to use 'liquid fuel' technology,*** **can be quenched with WATER.** No need to waste 'extra' fuel to quench the combustion. And it has been well proven that efficient combustion of carbon fuels ***requires*** some water to be present. ***So if you 'lean' the liquid fuel, be sure to replace it with water and you will not burn your valves.***

But in my ***not so humble*** opinion, the best combustion 'cooling' option is to simply use fuel that is already in the vapor state (adding NO liquid fuel to the engine). Then there IS NO late combustion and fuel (heat energy) is efficiently converted into mechanical energy. There is minimal pollution and the exhaust is cool. There is little or no exhaust pollution and no carbon buildup in the engine.

Pre-vaporization technology can double or triple the fuel economy of any particular engine. There are hundreds of patents to do this... ***Every one suppressed!*** *Too Bad this option doesn't make money for the Vested Interest***.**

Vaporizing the gasoline is how the Pogue Carburetor http://fuel-efficient-vehicles.org/energy-news/?page_id=986 achieved over 200 mpg (as publicly tested and proven by FORD). Another similar inventor was Tom Ogle http://fuel-efficient-vehicles.org/energy-news/?page_id=788

It is an easily provable FACT that the ability to achieve high mileage, even extreme mileage, has been known by the automotive industry since the early 1900s.

The technology isn't rocket science (people have been doing it in their garages for decades – watch how Tyson Capel got 211.7 MPG www.youtube.com/watch?v=orolvWBAzlI and www.youtube.com/watch?v=4l508fGfUj4 in his 2006 Buick) and it's not expensive if applied at an OEM level.

If engines were generally retrofitted with simple, practical, already proven vapor fuel technology (which can be done in any garage) the vehicle fuel consumption of the world would drop by 50%.

NEW MYSTERY CARBURETOR IS BEING TESTED

Toronto Man Has Invention He Claims Will Run Auto 200 Miles on One Gallon of Gasoline

TORONTO, Ontario, Nov. 30—(UP)—A "mystery" carburetor which, its inventor claims, will enable an automobile to travel more than 200 miles on a gallon of gasoline, is being secretly tested here, it became known today.

The inventor is Charles Nelson Pogue, 38, of Winnipeg, Manitoba, and his backers include John E. Hammell, millionaire Canadian mine promoter.

A car equipped with Pogue's carburetor, it was said, is being driven continuously, day and night, over Ontario roads.

W. D. Herridge, former Canadian minister to the United States and a brother-in-law of former Canadian Premier Richard Bedford Bennett, is interested in the invention. He has arranged handling of world-wide patents.

Please keep in mind that internal combustion engines ALREADY run on vapor, the liquid portion of the fuel is wasted; so why put liquid into the engine at all?

If you know some basic facts (instead of the lies), ***it becomes very easy to increase combustion efficiency***.

As presented above, one way to high mileage is to simply ***turn the fuel into vapor*** before introducing it into the engine. Thousands of people have already done it, in MANY different ways (research the many thousands of patents for proof of that).

One example, from the 1800s, Karl Benz[135] patented a cold vaporizing technology, an evaporative carburetor (like my HyCO 2A http://www.eagle-research.com/cms/node/213 technology) and became one of the first high-mileage innovators to be suppressed by the Vested Interest. He was allowed to build his excellent engines and vehicles, but only using liquid – ***not vapor*** – fuel technology.

BTW another concept to understand is that ***if it wasn't for compression*** the engine wouldn't even run. Since only 10% (on average) of the fuel is vapor, ***the actual combustion mixture (the air:vapor fuel) would be too lean to burn if it wasn't compressed***.

I hope you think this Blog was worth the time you spent reading it. If you do think so, **please forward the permalink (below) to anyone else whom you think might be interested:**
http://www.eagle-research.com/cms/node/462

Also, I'm compiling all this into an eBook, 'Double Mileage, Guaranteed', which (for a limited time) you can pre-view for free (click)

A slice of George Wiseman's fuel saving history:
http://www.eagle-research.com/cms/node/3921

Fuel Mileage Suppression by Vested Interest:

- http://www.eagle-research.com/cms/node/643
- http://www.eagle-research.com/cms/node/687

You can also add comments to the bottom of this blog if you log into your account (I love to see comments).

Till next time

May the blessings be

George Wiseman

---

[135] The original Benz from Mercedes-Benz http://en.wikipedia.org/wiki/Karl_Benz

Comments (from Wiseman's Blog)

THROTTLE PLATE RESTRICTS AIRFLOW?

> **Comment: *It appears you forgot the affect of the throttle plate on your calculation of how much air is going through the engine.***
>
> *With 15 inches of vacuum, the amount of air should be approximately half. There will probably be more vacuum than that, since the throttle plate will be mostly closed cruising at 60 MPH.*
>
> *This isn't to say I'm doubting 200 MPG is possible. There is enough energy in a gallon of gasoline to lift a typical car 6 miles straight up in the air...*

George Wiseman responds:

It appears you do not understand **volumetric efficiency (VE)**. The throttle plate has a lot less effect on the amount of air entering the engine than a person intuitively thinks. It was a surprising thing I learned in my mechanic's training.

I've been talking to several skeptics who know something about engines and **I now see a consistent paradigm.**

Some people think that the throttle plate/valve restricts the engine's air intake, significantly lowering the VE when it is closed or nearly closed and that a VE of 0.8 MUST be at or near at WOT. **This isn't true...**

Even a lot of mechanics make this mistake. **Thank you all for pointing out this stumbling block.**

It is true that if the throttle plate totally blocked off the air intake, the piston would create a high vacuum and no air would get into the cylinder.

This is so obvious that the next natural conclusion is that if the throttle is 10% open, then the cylinder would get only 10% air, 20% open 20% air and so on; but that ***logical assumption is wrong!***

The truth is that pretty much as soon as the throttle plate cracks open just a little bit, just enough so the engine can idle, the VE goes up to about 0.8

As the throttle opens up more, the VE goes up more, but only a little more.

***And now the REALLY counter-intuitive part*, as engine RPM increases, the VE decreases,** even though the throttle is open MORE.

Now I'm talking about 'normal' engine design here, not custom tuned intake manifolds that can actually exceed 100% VE (yep, just PACK that air in even without a turbocharger).

Air pressure and air temperature are important considerations but as far as VE is concerned, they are only 'fine tuning' considerations.

Here are some links to places that can explain volumetric efficiency:

- Basic VE explanation: http://www.auto-ware.com/combust_bytes/eng_sci.htm
- Find your VE with a scan tool: http://www.installuniversity.com/install_university/installu_articles/volumetric_efficiency/ve_computation_9.012000.htm
- Volumetric Efficiency calculator: http://www.ajdesigner.com/phpengine/engine_equations_volumetric_efficiency.php
  Note that this calculator shows the Aveo's VE to be 79.999%
  Givens: CFM=62.37, CID=97.64, RPM=2760
- Here is a forum discussion about calculating VE: http://www.physicsforums.com/showthread.php?t=65238

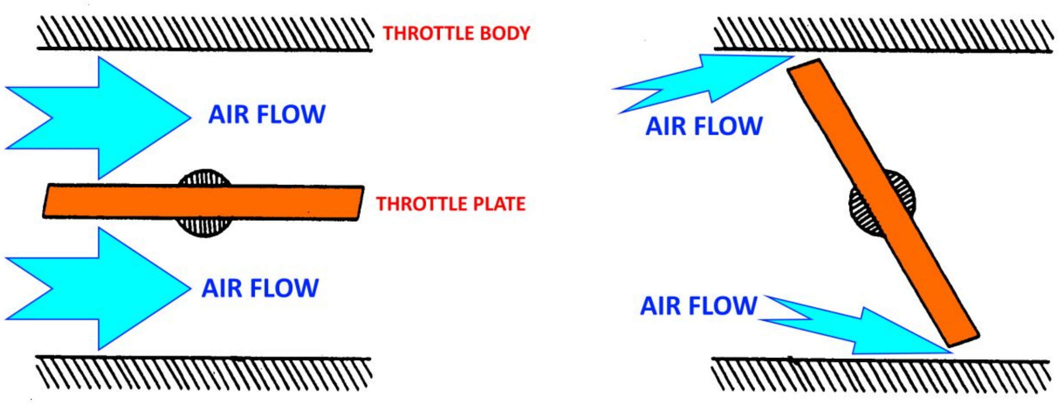

A good experiment to do, to better understand how the throttle restriction and VE interact, would be to take a large syringe (sans needle) and hold it in your left hand with your index finger ready to 'cap' the luer fitting hole (the tiny hole where the needle would go).

If you 'cap' the hole and then try to pull the plunger back (with your right hand), you will feel the pull against vacuum…

> ***(OK you science guys, I know vacuum is only a relative lack of pressure and that it is the atmospheric pressure that is pushing on the back of the plunger, but work with me here, we're talking to mechanics).***

…and when you release the plunger it will 'snap' back to the bottom because no air came into the cylinder.

That would be throttle plate 100% covering the engine's air intake, it's not going to run because it isn't getting any air.

So now we take our finger off the orifice and pull the plunger back slowly. As soon as we are done pulling, we instantly cap the orifice…

We now find the plunger doesn't move at all (or maybe only a little bit), the air pressure inside and outside are equal so the cylinder is 100% full of air, even though the air had to come in through a tiny orifice.

This is a principle of fluid dynamics whereby the air will move 'faster' through the orifice, to try to fill the area in the cylinder that becomes available as you pull the plunger out (and the absolute pressure will drop, making a vacuum in the orifice and the cylinder as air moves).

So, when the engine is near idle, the VE is fairly high, even though the throttle plate is near closed.

Next we reset the syringe, plunger to bottom and pull harder/faster and again cap the orifice just as we get done pulling. Ah HA!, the plunger now goes back down the cylinder if we release it!

So the faster we pull the plunger, the LOWER the VE!

Now in real life, we're opening up the throttle as we increase RPM, and valve timing usually allows air to enter the cylinder for a bit after BDC[136] and other factors (like air velocity and intake tuning) help keep VE up, but the point is that VE usually decreases when RPM increases.

I hope I've now convinced you that I do know what VE is and how it works so you will believe that my 'lie' calculation is reasonably accurate and that anyone can duplicate it on their own vehicle.

The next question is... If the throttle plate isn't really restricting air flow, if it doesn't have a significant effect on VE... Why is the throttle plate even there?

It's there because the engine needs the vacuum to lower the 'boiling point' of the gasoline, so vapors will be produced from the volume of liquid being dumped into the engine.

While the throttle plate doesn't significantly affect VE, **it DOES put a significant load on the engine.** It takes energy to maintain that vacuum. Remember how much more power you needed to use to pull that syringe plunger back faster?

With my Aveo, I'm 'consuming' about 0.3 GPH of fuel just to idle. This is a crazy amount of energy that is wasted, just to help the fuel partially vaporize. If we feed the engine with vapor, we can eliminate the intake manifold vacuum and dramatically lower that parasitic power loss. We still need a 'fuel regulating valve' of some kind, but it wouldn't have to cause a vacuum. That is how my RV generator is currently set up and, come spring, I'll make a video of it.

---

[136] Bottom Dead Center, the lowest position of the piston.

Chapter 20.

154 Years of International and US Patents

Brown's Gas in Official US Patents

Note that the US Patent Office is aware of Brown's Gas and its various uses, as described in US Patent № 7067097, granted in ***2006*** to Gregory J. Wojak of Scottsdale, Arizona, in which he describes a unique application whereby Brown's Gas is used for producing diamonds: *"This gas is well known and is described, e.g., in US Patent № 6,021,915*(137)*, the entire disclosure of which is hereby incorporated by reference into this specification. As is disclosed in such patent,* ***"The Brown's Gas that is used in the present invention is itself a non-explosive mixed gas that consists of hydrogen and oxygen mixed in a molar***[138] ***volume ratio of 2:1, and it is obtained by electrolysis of water."***

And then, Brown's Gas is also described as KNOWN TECH in Patent № 8,101,051 (granted 2012), and also appears in other patents such as EP1474547 and 2005/0006228. HHO is mentioned in Patent № 8127750 B2 (granted 2012) and Patent № 7932619 (from 2011) as well as US Patents numbered 8303798, 8425637, 8449733, 8449734, 8449735, 8449736, 8449754, 8454808 and 8499722. Patent № 8303798 (granted 2009) ties them all together: ***"The invention is a unit that produces Hydrogen Gas (Brown's Gas (HHO)) that can be used as an assist to Diesel and gas engines."*** This grew bigger and at the time this book is being printed, Brown's Gas and HHO are regularly mentioned in dozens of new Patents, i.e., the examiners do not consider it "pseudo-science".

Patent History: 1863→Present Day

The list of Patents below is never complete because Waterfuel Patents keep coming up all the time. But it is definitely long enough to make a point, and since I've never seen a list half as long on the subject, I hope you find it useful for your research and development.

---

[137] This patent number could be wrong, because the quoted text could not be located in that or any other US Patent. However, the above quote DOES appear in the approved US Patent 7067097 of June 27, 2006.

[138] "Molar" is a chemical factor describing the concentration or ratio of one ingredient to the mix.

Where to find more Patents and more data about them

- Patents – most US Patents and related internationals starting from the 1800's — can be downloaded, free of charge, from http://www.FreePatentsOnline.com which is an excellent service and a true goldmine of data for every researcher no matter the industry. Googling a patent number usually brings you right into the one you need, with links to all relevant data: inventor (all his/her Patents), drawings, links to official gov't data, etc. https://patents.google.com
- Another great tool is *"US Patent & Trademark Office, Patent Full Text and Image Database Search"*: http://patft.uspto.gov/netahtml/PTO/search-bool.html (to view the images you need the free TIFF reader from www.alternaTIFF.com)
- Find European patents (1978–today): https://data.epo.org/publication-server/search
- For UK Patents search here: https://www.ipo.gov.uk/p-ipsum.htm
- For World Patents search: http://www.wipo.int/ipdl/en/ – or via Google.

Notes on Patents listed here

Patents marked "Therapeutic"

A small number of US and International Patents listed above describe the use of Brown's Gas to treat our body directly. It's true that this type of application is not purely "Waterfuel" but in the public's mind I've seen strong linkage between the use of Brown's Gas to fuel engines, to enhance engine performance – and its use for bodily therapeutic purposes as well. Maybe it's like "combustion enhancement for the body"…

It is my personal conviction that Waterfuel enthusiasts, researchers and experimenters will continue to seek and develop new applications and uses for Brown's Gas, and will continue to tie them together in more than one way.

Patent Applications

While Patent Applications are official government publications, they have not been approved yet. However, they are fascinating study material; and besides, applications provides us with an excellent window into the future of the technology.

What's the real significance of a Patent?

Before you dive into the list of Patents below, you should understand that a Patent is not granted lightly! I've submitted several inventions of my own in the past 30 years and I know firsthand how hard they check your invention before approval. Therefore, by approving the Patents listed below, government experts ('Patent Examiners' is their official title) have officially admitted that – apart from being (1) ***NEW for their time*** – the claimed apparatuses and methods are indeed:

(2) ***USEFUL*** = beneficial, and (3) ***PRACTICAL*** = can be produced by industry.

So you see, the Government officials who have signed on these documents have clearly and repeatedly positively answered the question: ***"Is there real SCIENCE behind Waterfuel?"***

Furthermore, between the lines and papers, the Patent Offices are sending us another important message: ***"We admit: THERE ARE MANY WAYS to make and use Waterfuel!"***

Hydrogen, Brown's Gas and Waterfuel Patents from Around the World – Partial List:

In the list below, Patent numbers without a prefix are US Patents; European Patents have an EP prefix, WO denotes a worldwide registration of a Patent, GB denotes a UK Patent, HU is for Hungary and so on. In the electronic version of this book, download links lead to full information, drawings, background info, lists of related/cited inventions and sometimes related publications (books, science papers and more). Therefore this list alone, in actuality, refers to many thousands of pages you can research and use.

The list is ordered by date of publication. Actual filing usually dates years earlier.

I highlighted several inventors' names simply because, for one reason or another, they have become very famous. Yet regardless of the fame, other inventors are just as important because they all contribute to this whole, multi-faceted science.

Leonardo da Vinci (1452-1519) was a master of inventive imagination; his way of tackling a problem was first of all to understand it by learning how to restructure it in many different ways. He would look at a problem from many perspectives AND EXPERIMENT WITH IT as much as he could – with the technology at hand – complementing the rest with imagination and theoretical research.

The 153-year track record of Waterfuel Patents is an ever-expanding proof that we, Mankind as a whole, have been applying da Vinci's principle to the problem at hand:

"How can we extract Free-Energy[139] from water?"

---

[139] Free-Energy: see Glossary.

Year	Patent №	Inventor(s)	Download	Pages
1863	40805	Arbos (Spain)	US0040805	3
1884	308276	***Henry Paine***	US0308276	2
1898	603058	Eldridge; Clark; Blum	US0603058	6
1901	685274	Haas (Germany)	US0685274	3
1912	1037979	Perkins	US1037979	8
1917	1226500	Fuehler {Water explosion engine!}	US1226500	3
1917	1217788	Liedtke {Water Injection}	US1217788	11
1918	1262034	***Charles Frazer***	US1262034	3
1920	1339176	Dyer {Water Injection}	US1339176	4
1921	1380183	Boisen	US1380183	3
1924	1490975	Howard	US1490975	4
1926	1600478	Lawaczeck (Germany)	US1600478	6
1928	1660147	Allan	US1660147	11
1932	1876879	Drabold	US1876879	4
1932	GB364180	***Rudolf Erren*** (Germany)	GB364180	4
1933	1905627	Holland	US1905627	3
1935	2006676	***Charles Garrett***	US2006676	4
1935	2016442	Kilgus (Germany)	US2016442	3
1939	2183674	***Rudolf Erren*** (Germany)	US2183674	4
1944	2365330	Carmichael	US2365330	6
1950	2496623	Fragale	US2496623	3
1950	2509498	Heyl (England)	US2509498	3

Year	Patent №	Inventor(s)	Download	Pages
1957	2791881	Denker {Diesel+steam}	US2791881	3
1965	3207684	Dotts	US3207684	6
1966	3291714	Hall; Van Gemert (Australia)	US3291714	13
1966	3262872	***William Rhodes***; Raymond Henes	US3262872	13
1966	3252455	Marshall	US3252455	2
1967	3330755	Mahany	US3330755	6
1967	3311097	Mittelstaedt	US3311097	8
1967	3310483	***William Rhodes***	US3310483	3
1969	3433729	Prokuryakov; Zizin (Ufa, U.S.S.R.)	US3433729	4
1970	3518180	Grotheer	US3518180	8
1972	3648668	***Francisco Pacheco*** (Bolivia)	US3648668	4
1972	3652431	Reynolds	US3652431	11
1972	3648714	Laveau {Water & Fuel Mix}	US3648714	7
1973	3755128	Herwig	US3755128	9
1973	3749318	Cotell {Water & Fuel Mix}	US3749318	6
1973	3741712	Delatronchette	US3741712	4
1973	3766942	Delatronchette {Water & Fuel Mix}	US3766942	6
1974	3844262	Dieges	US3844262	7
1975	3862819	Wentworth	US3862819	6
1975	3862624	Underwood	US3862624	9
1975	3906913	Rupe – ***California Institute of Technology***	US3906913	12

Year	Patent №	Inventor(s)	Download	Pages
1975	3876363	Lahaye	US3876363	10
1975	3901644	Armas	US3901644	6
1976	3933614	Bunn	US3933614	4
1976	3999089	Barros	US3999089	7
1976	DE19742447822	Horst Manfred Kerber (Germany – registred by DPMA[140])	DE2447822	6
1976	3990962	Gotz (Germany – reg. by USPTO[141])	US3990962	7
1976	3969481	Murray; Hynek	US3969481	7
1976	3954592	***Stephen Horvath*** (Australia)	US3954592	16
1976	3967589	Papineau	US3967589	5
1976	3980053	***Stephen Horvath*** (Australia)	US3980053	26
1976	3998205	Scragg {Seawater+Solar}	US3998205	6
1977	4031865	Dufour	US4031865	4
1977	4053683	Rounds	US4053683	8
1977	4009006	Hreha	US4009006	4
1977	4023545	Mosher; Webster	US4023545	7
1977	4014777	***Yull Brown (Australia)***	US4014777	11
1977	4030455	Van Eeck {Anti-pollution}	US4030455	6
1977	4024715	Scragg {Seawater+Solar}	US4024715	7
1977	4026112	Scragg {Seawater+Solar}	US4026112	8
1978	4124463	***Archie Blue*** (New Zealand)	US4124463	4

---

[140] Deutsches Patent- und Markenamt (German Patent & Trademark Office)

[141] US Patent & Trademark Office

Year	**Patent №**	**Inventor(s)**	**Download**	**Pages**
1978	4113601	***Ernst Spirig*** (Switzerland)	US4113601	7
1978	4080271	Howard Brown	US4080271	5
1978	4105528	Shigeta Hasebe (Japan)	US4105528	5
1978	4107008	***Stephen Horvath*** (Australia)	US4107008	30
1978	4081656	***Yull Brown*** (Australia)	US4081656	11
1978	4333796	***Flynn*** {Water Cavitation, Sonofusion, early "Cold Fusion"}	US4333796	18
1978	4085709	Tangri	US4085709	5
1978	4070861	Scragg {Seawater+Solar}	US4070861	10
1979	4161657	Shaffer	US4161657	7
1979	4144015	Berthiaume {Water & Fuel Mix}	US4144015	10
1979	4175381	Scragg {Seawater+Solar}	US4175382	7
1980	4226213	Bernauer	US4226213	7
1980	4206029	***Ernst Spirig*** (Switzerland)	US4206029	6
1980	4184931	Inoue (Japan)	US4184931	4
1980	4185593	McClure	US4185593	4
1980	4233127	Monahan	US4233127	16
1981	4256060	Donald Kelly	US4256060	10
1981	4265721	Hackmyer	US4265721	2
1981	4271793	Valdespino	US4271793	7
1982	4355969	Nelson; FitzGerald {Water & Fuel Mix, electrically charged}	US4355969	4
1982	4332219	Gonzalez	US4332219	11

Year	Patent №	Inventor(s)	Download	Pages
1982	4339324	Haas	US4339324	13
1982	4312736	Menth; Muller; Stucki (Switzerland)	US4312736	5
1982	4352722	Ohkawa	US4352722	7
1982	4361474	Shoaf; Pearson	US4361474	6
1982	4319552	Sauer; Barry	US4319552	8
1983	4379043	Chappelle	US4379043	8
1983	4394230	***Henry (Andrija) Puharich***	US4394230	20
1983	4371500	Papineau	US4371500	33
1983	4369737	Sanders	US4369737	6
1983	4389981	***Stanley Meyer***	US4389981	14
1983	4421474	***Stanley Meyer***	US4421474	6
1983	CA1227094A1	***Stanley Meyer*** (Canadian Patent)	CA1227094	23
1983	CA1228833A1	***Stanley Meyer*** (Canadian Patent)	CA1228833	23
1983	CA1233379A1	***Stanley Meyer*** (Canadian Patent)	CA1233379	29
1983	CA1234773A1	***Stanley Meyer*** (Canadian Patent)	CA1234773	27
1983	CA1234774A1	***Stanley Meyer*** (Canadian Patent)	CA1234774	34
1983	CA1235669A1	***Stanley Meyer*** (Canadian Patent)	CA1235669	13
1983	4368696	Reinhardt	US4368696	8
1983	4416610	Gallagher, jr. {Water & Fuel Mix}	US4416610	22
1983	4426354	Scragg {Seawater+Solar}	US4426354	6
1984	4442801	Glynn John+Daniel; Andrews	US4442801	10
1984	4425215	Henes	US4425215	11

Year	Patent №	Inventor(s)	Download	Pages
1984	4465964	John Cover	US4465964	15
1984	4486701	John Cover	US4486701	10
1984	4488951	Nolan; LaConti	US4488951	7
1984	4465455	***Stanley Meyer***	US4465455	5
1984	CA1231872A1	***Stanley Meyer*** (Canadian Patent)	CA1231872	38
1984	4430054	Furuya {Water & Fuel Mix}	US4430054	6
1984	4443180	Lefrois {Water & Fuel Mix}	US4443180	7
1984	4374288	Scragg {Seawater+Solar}	US4374288	7
1985	4519769	Tanaka {Water & Fuel Mix}	US4519769	6
1985	4492338	Marelli {Water & Fuel Mix}	US4492338	6
1986	4628010	Iwanciow	US4628010	5
1986	4599158	Ofenloch	US4599158	6
1986	4613304	***Stanley Meyer***	US4613304	6
1987	4688550	Lopes {Water & Fuel Mix}	US4688550	4
1988	CA1234774	***Stanley Meyer*** (Canadian Patent)	CA1234774	34
1988	4773981	Bidwell	US4773981	11
1988	4774810	Bidwell	US4774810	8
1988	4720331	Billings	US4720331	11
1988	4747925	Hasebe; Miyazawa; Daidoji (Japan)	US4747925	8
1988	4726888	McCambridge	US4726888	5
1988	4763610	Thomas	US4763610	4
1989	4798661	***Stanley Meyer***	US4798661	19

Year	Patent №	Inventor(s)	Download	Pages
1989	4826581	***Stanley Meyer***	US4826581	13
1989	4801304	Polanco; Layrisse; Rivas; Jimenez; De Paz; Salazar; Rivero; Guevara; Chirinos (Venezuela) {Water & Fuel Mix}	US4801304	11
1990	4936961	***Stanley Meyer***	US4936961	8
1990	4952340	Wentworth	4952340	8
1991	EP0405919A1	***Juan Carlos Aguero*** (Argentina)	EP0405919A1	8
1991	CA2067735A1	***Stanley Meyer*** (Canadian Patent)	CA2067735	33
1991	5037518	Young; Zweifel; Cladwell	US5037518	19
1991	5000757	Puttock; Somerville (UK) {Water/Fuel Mix}	US5000757	9
1992	5159900	Dammann	US5159900	6
1992	5089107	***Francisco Pacheco*** (USA, but *he invented it in 1939 in Bolivia*)	US5089107	5
1992	5105773	Cunningham	US5105773	8
1992	7043918	Lee (Taiwan)	US7043918	5
1992	5143025	Munday (Canada)	US5143025	13
1992	5110436	Schubert; Grigger	US5110436	5
1992	5149407	***Stanley Meyer***	US5149407	24
1992	5087344	Wenske; Gallien; Hanke; Lampe; Illgen (Germany)	US5087344	13
1992	5082544	Willey; Radford	US5082544	16
1992	5143047	Woodrow Lee	US5143047	8
1993	5244558	Chiang (Taiwan)	US5244558	7

Year	Patent №	Inventor(s)	Download	Pages
1993	5231954	Stowe	US5231954	9
1993	5188090	***Griggs*** {Water Cavitation}	US5188090	8
1993	5196104	Munday {HHO-driven turbine}	US5196104	8
1993	5249957	Hirata (Japan) {Water & Fuel Mix}	US5249957	11
1993	5272871	Oshima; Abe; Kawahara; Yokota; Muraki; Fukui (Japan)	US5272871	23
1994	5343699	***Roy McAlister***	US5343699	25
1994	5279260	Munday (Canada)	US5279260	7
1994	5293857	***Stanley Meyer***	US5293857	17
1995	5450822	Cunningham	US5450822	9
1995	5417817	Dammann; Wallman	US5417817	6
1995	5399251	***Yoshiro Nakamatsu*** (Japan)	US5399251	27
1995	5385657	Dungan	US5385657	7
1995	5552675	Dungan	US5552675	17
1995	5435274	Richardson	US5435274	8
1995	5452688	Rose	US5452688	6
1995	5394852	***Roy McAlister***	US5394852	14
1995	WO1995020816	***Francesco Piantelli*** {"Cold Fusion"}	WO1995020816	31
1996	5540831	Martin Klein	US5540831	13
1996	HU212560	Miklós (Hungary)	HU212560	4
1996	5513600	Teves	US5513600	11

Year	Patent №	Inventor(s)	Download	Pages
1997	5672259 5494559 5494559 WO1996041903	***James Patterson*** {"Cold Fusion"}	US5494559	8
1997	5632870	Kucherov	US5632870	20
1997	5628881	Lemelson	US5628881	16
1997	5692459	Richardson	US5692459	9
1997	5628885	Yang-Chen Lin (Taiwan)	US5628885	15
1998	5711865	Caesar (Australia)	US5711865	22
1998	5852993	***Herman P. Anderson***	US5852993	11
1998	RU2157861	***P.M. Kanarev*** (Russia)	n/a	n/a
1998	RU2157862	***P.M. Kanarev*** (Russia)	n/a	n/a
1998	5794601	***Paul Pantone***	US5794601	7
1998	5733421	Pettigrew; Monette; Hirsch	US5733421	12
1998	5792325	Richardson	US5792325	7
1998	5826548	Richardson	US5826548	8
1998	5843292	Spiros (Australia)	US5843292	36
1999	5924287	Best	US5924287	6
1999	5863413	Caren; Ekchian	US5863413	14
1999	5858185	Christian (New Zealand)	US5858185	7
1999	5888361	Hirai; Yasui; Kobayashi; Morioka; Miyake; Harada (Japan)	US5888361	20
1999	RU2157427	***P.M. Kanarev*** (Russia)	n/a	n/a
1999	RU2167958	***P.M. Kanarev*** (Russia)	n/a	n/a

Year	Patent №	Inventor(s)	Download	Pages
1999	RU2175027	***P.M. Kanarev*** (Russia)	n/a	n/a
1999	5997283	Spiros (Australia)	US5997283	33
1999	6000214	Scragg {Seawater+Solar}	US6000214	14
2000	6012915	Masahiro; Toshiyasu (Japan) {Water & Fuel Mix}	US6012915	11
2000 1977 1993	US-6096177 JP-54006898 JP-6-262172	Kamitani; Yamaguchi; Hori (Japan) ←also published as 2 Japanese Patents	US6096177	9
2000	6011192	Baker; Lokhandwala	US6011192	24
2000	6048500	Caren; Ekchian	US6048500	14
2000	6119651	***Herman P. Anderson***	US6119651	20
2000	6024935	Mills; Good; Phillips; Popov	US6024935	60
2000	6126794	***Stephen Chambers*** (Xogen, Canada)	US6126794	17
2000	6113748	William Richardson	US6113748	10
2000	6033549	Peinecke; Mohr (Germany) {Solar-powered Waterfuel}	US6033549	8
2001	6332434	De Souza; Balan	US6332434	14
2001	6220141	Fitter; Crossley {Water explosion launcher}	6220141	7
2001	6314918	McFarland; Jones	US6314918	6
2001	6257175	Mosher; Webster	US6257175	22
2001	RU2186153	***P.M. Kanarev*** (Russia)	n/a	n/a
2001	RU2213162	***P.M. Kanarev*** (Russia)	n/a	n/a

Year	Patent №	Inventor(s)	Download	Pages
2001	6170441	Haldeman {Water & Fuel Mix}	US6170441	8
2001	6209493	Ross	US6209493	17
2001	6183604	***Rugerro Maria Santilli***	US6183604	11
2001	6311648	Larocque (Canada)	US6311648	11
2002	6461408	Buxbaum	US6461408	26
2002	6419815	***Stephen Chambers*** (Xogen, Canada)	US6419815	17
2002	6336430	De Souza; Balan	US6336430	19
2002	6397834	Kim (S. Korea)	US6397834	8
2002	2002/0166546	Andrews; Murphy	US20020166546	20
2002	6761558	Kim (S. Korea) {Furnaces, heating!}	US6761558	10
2002	6375812	Leonida	US6375812	8
2002	RU2210630	***P.M. Kanarev*** (Russia) {"Cold Fusion"}	n/a	n/a
2002	6372100	Yang-Chen Lin (Taiwan)	US6372100	13
2003	6544316	Baker; Pinnau; Zhenjie He; Amo; Costa; Daniels	US6544316	27
2003	6512201	Blankenship	US6512201	22
2003	6579638	Brassard	US6579638	7
2003	6554975	Dammann; Wallman	US6554975	6
2003	EP1474547	Hyun (S. Korea)	EP1474547A1	35
2003	6508210	Knowlton; Workman	US6508210	15
2003	6592749	Lokhandwala; Baker	US6592749	21
2003	RU2003137263	***P.M. Kanarev*** (Russia)	n/a	n/a

Year	Patent №	Inventor(s)	Download	Pages
2003	RU20313344	***P.M. Kanarev*** (Russia)	n/a	n/a
2003	6572740	Rosenblum; Lavi; Yigal (Israel)	US6572740	24
2003	6540966	***Rugerro Maria Santilli***	US6540966	26
2003	6663752	***Rugerro Maria Santilli***	US6663752	13
2003	6610193	Schmitman	US6610193	17
2003	6630113	Surma {Waste treatment!}	US6630113	99
2003	6659049	Zagaja; Molter; Moulthrop; Smith	US6659049	7
2004	JP2004059977	Tadahiko Mizuno (Japan) {"Cold Fusion"}	http://RexResearch.com/mizuno/JP200405997.pdf	9
2004	6817320	Balan; Johnston; Balan; De Souza	US6817320	14
2004	6712944	Byron; Brown	US6712944	13
2004	6790324	***Stephen Chambers*** (Xogen, Canada)	US6790324	16
2004	2004/0202905	***Daniel Dingle*** (Philippines)	US20040202905	2
2004 2005 2007	6689259 6866756 7191737	***Dennis Klein***	US6689259	8
2004	6719817	Marin	US6719817	14
2004	6821663	McElroy; Gottmann; Finn; Mitlitsky	US6821663	29
2004	RU2227817	***P.M. Kanarev*** (Russia)	n/a	n/a
2004	RU2228390	***P.M. Kanarev*** (Russia)	n/a	n/a
2004	RU2232829	***P.M. Kanarev*** (Russia)	n/a	n/a
2004	6673322	***Rugerro Maria Santilli***	US6673322	41

Year	Patent №	Inventor(s)	Download	Pages
2004	6705425	West	US6705425	12
2005	6977120	Chou; Sum; Te-Hung; Lin {Welding!}	US6977120	12
2005	6939449	Holger Streckert; Linden Blue	US6939449	16
2005	2005/0006228	Hyun (S. Korea)	US20050006228	11
2005	WO2005/049051	Kang (S. Korea) {Therapeutic!}	WO2005049051	69
2005	6864596	Maiwald; Muller (Siemens – Germany/USA)	US6864596	12
2005	6918350	Morse {Sea-based!}	US6918350	18
2005	RU2256006	***P.M. Kanarev*** (Russia)	n/a	n/a
2005	RU2256007	***P.M. Kanarev*** (Russia)	n/a	n/a
2005	RU2258097	***P.M. Kanarev*** (Russia)	n/a	n/a
2005	RU2258098	***P.M. Kanarev*** (Russia)	n/a	n/a
2005	RU2260075	***P.M. Kanarev*** (Russia)	n/a	n/a
2005	6841046	Puthawala; Schonfeld (Siemens, Germany)	US6841046	7
2005	AU-2005100722-A4	Nam; Roberts (Australia)	AU2005100722	7
2005	6896789	Ross	US6896789	24
2005	6926872	***Ruggero Maria Santilli***	US6926872	30
2005	6972118	***Ruggero Maria Santilli***	US6972118	25
2005	6911126	Slavchev	US6911126	11
2005	6939449	Streckert; Blue	US6939449	16
2005	2005/0246059	***Stephen Meyer***	US20050246059	10

Year	Patent №	Inventor(s)	Download	Pages
2005	6852205	Toyoshima; Yonezawa; Hirari; Miyake; Ishii; Oi; Toriu (Japan)	US6852205	51
2005	6857397	Zagaja; Molter; Moulthrop; Smith	US6857397	6
2005	6932914	***Mark L. LeClair*** {Water Cavitation}	US6932914	22
2005	6960307	***Mark L. LeClair*** {Water Cavitation}	US6960307	17
2006	7125480	Austin	US7125480	10
2006	7021249	Christison	US7021249	16
2006	7067097	Gregory Wojak	US7067097	24
2006	7005075	Herrington; Mich; Schwarz	US7005075	12
2006	7036616	Kejha	US7036616	22
2006	7014740	Kim (S. Korea)	US7014740	13
2006	7045042	O'Brien (Canada)	US7045042	10
2006	RU2006100216	***P.M. Kanarev*** (Russia)	n/a	n/a
2006	RU2006103430	***P.M. Kanarev*** (Russia)	n/a	n/a
2006	RU2277138	***P.M. Kanarev*** (Russia)	n/a	n/a
2006	7143722	Ross	US7143722	24
2006	7144826	Roters; Mader; Sommer; Erlikh; Pashut	US7144826	9
2006	7097676	Wootan; Hawkins	US7097676	10
2006	CN1653865A CA2483753A1 WO2003096767 2006/0060464	Chang (Australia) {Plasma-assisted water electrolysis}	US20060060464	54
2006	2006/0029893	Kuai-Teng Hsu	US20060029893	12

Year	Patent №	Inventor(s)	Download	Pages
2007	2007/0284244	Nehemia Davidson	US20070284244	24
2007	7160434	Becker; Moroney {Therapeutic!}	US7160434	19
2007	7261062	Holt; Baker; Speight; Anderson; Salmon; Stevens	US7261062	10
2007	2007/0104797	**Kang** (S. Korea) {Therapeutic!}	US20070104797	21
2007	7160472	Van Vliet; (Canada); Campbell; Chambers (USA) {Xogen}	US7160472	18
2007	7297288	**Mark L. LeClair** {Water Cavitation}	US7297288	23
2007	WO2007/031078	Büsselmann {Water explosion engine!}	WO2007031078	22
2008	2008/0216793	Bow (Australia) {Water Engine!}	US20080216793	15
2008	2008/0216906	Curello; Fairbanks; Stepan; Sgroi; Curello	US20080216906	24
2008	2008/0216774	Fulton; Marmaro; Egan	US20080216774	22
2008	2008/0190383	Lin (Taiwan)	US20080190383	6
2008	2008/0105218	Lin (Taiwan)	US20080105218	5
2008	GB2446488	Loggers; Versteeg (Netherlands)	GB2446488	7
2008	2008/0172928	Loggers; Versteeg (Netherlands) {Water as Fuel!}	US20080172928	2
2008	2008/0234527	Matsumoto; Enomoto; Kude; Kobori (Japan)	US20080234527	18
2008	7318885	Omasa (Japan)	US7318885	65
2008	2008/0209808	Seaba; Brooks	US20080209808	14
2008	7412947	Shinagawa; Okumura (Japan)	US7412947	9
2008	8168047	Smith	US8168047	8

Year	Patent №	Inventor(s)	Download	Pages
2008	7458368	Huffman	US7458368	7
2008	CA2445717A1 CA2445717C CN1237208C CN1505698A EP1398395A1 EP1398395A4 US7459071 2004/0094408 2009/0045049 WO2002090621	***Ryushin Omasa*** (Japan)	US7459071	31
2009	7552702	Stone {Water Engine!}	US7552702	5
2009	2009/0148734	Wang	2009/0148734	8
2009	8303798	Dees; Colclesser; Saldivar; April	US8303798	18
2009	7517430	Mark L. LeClair {Water Cavitation}	US7517430	17
2009	7475656	Yatsenko	US7475656	10
2009	2009/0173069	Büsselmann (Larnaka, Cyprus) {Water explosion engine!}	20090173069	8
2009	WO/2009/073406	Scragg {Seawater+Solar}	WO2009073406	12
2009	MX2009005080 EP2109500 CA2669709 JP2010509565 WO2008064002	***John Kanzius; Rustum Roy*** {Salt Water as Fuel!}	Chapter 31	>23
2010	7793621	Stehl; Larson	US7793621	32
2010	2010/0300381	Harper	US20100300381	10
2010	2010/0288212	Williams	US20100288212	15

Year	Patent №	Inventor(s)	Download	Pages
2010 2014	8100092 8702916	McBride; Ciacelli	US8100092	12 13
2010	7837882	Van Vliet; Campbell; Chambers	US7837882	18
2010	7753010	Rutledge	US7753010	21
2010	2010/0187321	Bunn; Akkerman	US20100187321	25
2010	2010/0275858	Jeffs; Barlow	www.uspto.gov	20
2010	2010/0049417	Bailey; Bethurem {Aftermarket ECU}	US20100049417	16
2010	2010/0183931	Hedman	www.uspto.gov	15
2010	2010/0043730	O'bireck; Basra; Doughty	US20100043730	6
2011	WO2010151157	Leonardo & Glenneil Mendoza	WO2010151157	21
2011	7932619	Newcomer {HHO from tidal waves}	US7932619	8
2011	2011/0255645	Zawodny – ***NASA*** {"Cold Fusion"}	US20110255645	8
2011	2011/0006544	Geurts	US20110006544	10
2011	CN101652546-A	Scragg {Seawater+Solar}	CN101652546A	11
2011	7981556	Shiroma; Lillis; Halter	US7981556	12
2011	US20110008736 JP2008/069573 CN101842635A EP2208928A1 EP2208928A4	Yusho Arai (Japan)	US20110008736	42
2012	EP2137098A4 WO2008131126 US11/738476	***Ted Suratt; Robinson B. Gourley***	EP2137098	15
2012	8127750	Klein; Dica; Georgescu; Pamfilie; Chiriac	US8127750	10

Year	Patent №	Inventor(s)	Download	Pages
2012	201210160883 (China)	Godes {Brillouin Energy = "Cold Fusion"} Also published as Chinese Patent Applications CN101395677A and CN101395677B, European Patent Applications EP1971985A2 and EP1971985A4, US Patent Appications US20070206715, US20110122984 and US20150187444, World Patent Applications WO2007130156A2 and WO2007130156A3	201210160883	n/a
2012	8186315	Jeffs; Barlow	US8186315	19
2012	WO2012128984 2012/0244485	Mikuski, Vajda, Gaynes	US20120244485	33
2012	8291872	Szybist; Conklin {Water Injection}	US8291872	8
2012	8101051	Yang (Japan)	US8101051	20
2012	8303798	Dees; Colclesser; April	US8303798	18
2012	(Italy) MI 2012E000093	Leonardo Corporation (Florida) {"Cold Fusion"}	www.uibm.gov.it	n/a
2011	8082890 8459214 WO2010068498	***Vernon Roth;*** Gregory Sherman	US8082890	12
2013	2013/0243143	Mastromatteo; Ziglioli (Stmicroelectronics) {"Cold Fusion"}	US20130243143	14
2013	US8409422 B2	***Robert Vancina*** (Australia) {"Cold Fusion"}	US8409422	11
2013	8425637	Lersch; Braught {Waste treatment!}	US8425637	10
2013	8454808	Owens	US8454808	12
2013	8499722	Owens	US8499722	8
2013	8449733	Owens	US8449733	11
2013	8449734	Owens	US8449734	12

Year	Patent №	Inventor(s)	Download	Pages
2013	DE102012006827 A1	Reinhard Gentsch (Germany)	DE102012006827	7
2013	8449735	Owens	US8449735	12
2013	8449736	Owens	US8449736	12
2013	(US)20150152346 (EU) 2847303A1 (WO)2013169669	Gurin; Macijauskas; Pikul; Permiakov {Water & Fuel Mix}	US20150152346	8
2013	8449754	Owens	US8449754	11
2013	8375712	Büsselmann {Water explosion engine!}	US8375712	9
2013	8419919	Boss; Gordon; Szpak; Forsley (***U.S Navy***) {"Cold Fusion"}	US8419919	18
2013	8544452	Galvin; Kerstiens	US8544452	6
2013	EP2368252B1	***Francesco Piantelli*** {"Cold Fusion"}	EP2368252B1	27
2013	2013/0263597 A1	Nicolas Chauvin {"Cold Fusion" for cars}	US20130263597	15
2014	8864964	Aggelopoulos (Hawaii)	US8864964	15
2014	8901757	Kouns {Citing George Wiseman}	US8901757	14
2014	8702916	McBride; Ciacelli	US8702916	13
2014	8661816	Mathews; ***Crower*** (Crower Engine); Kiss {Water Injection}	US8544452	6
2014	8714115	McConahay; Dupree; Ortenheim	US8714115	22
2014	CA2854390A1 CN103800979A DE202014004509U1 EP2815780A2 EP2815780A3 AU2014203256	Hsin-Yung Lin (China) {Therapeutic!}	US20140374243 US20140378745	7

Year	Patent №	Inventor(s)	Download	Pages
2014	8869755	Yehuda+Eitan+Doron Shmueli (Florida) {Water as Fuel!}	US8869755	11
2015	9051872	Monros	US9051872	11
2015	8955469	McConahay; Dupree; Ortenheim	US8955469	21
2015	9157159	Hansen	US9157159	26
2015	9267468	Owens	US9267468	11
2015	9212634	Adair	US9212634	11
2015	9267428	Jonson; Riesselman; Morrow; Hess; Robel	US9267428	29
2015	9027342	Foy Nicholas+Ursula	US9027342	12
2015	9034167	Finfrock; Hill; Bateman	US9034167	8
2015	9074555	Shmueli Yehuda+Eitan+Doron (Florida) {Water as Fuel!}	US9074555	10
2015	9127548	Ishii (Hawaii) {HHO-fueled rocket}	US9127548	36
2015	9140181	Turgeon; Turgeon	US9140181	21
2015	9150972	Vargas Alfredo+Jose	US9150972	28
2015	9194583	De La Sovera	US9194583	14
2015	US9005421 DE102008051670 EP2337878 WO2010043208 US20110303548	Demuth; Kerpen; Kuklya (H2 Solar GmbH, Germany) {Split water by sunlight & Titanium Disilicide as catalyst}	US9005421	6
2016	9291129	Robinson	US9291129	5
2016	9267428	Jonson; Riesselman; Bingel; Morrow; Hess; Robel	US9267428	29
2016	9410254	Samrgandi	US9410254	7

Year	Patent №	Inventor(s)	Download	Pages
2016	9341112	Kerstiens; Galvin	US9341112	6
2016	9353451	Haywood	US9388749	12
2016	9388749	MacDonald	US9388749	21
2016	9399946	Owens	US9399946	18
2016	9453457	Owens	US9453457	23
2016	9464553	Wold	US9464553	42
2016	9527569	Fournier; Godsall (Canada) {Waterfuel aircraft}	US9527569	7
2016	9518330	Grimm	US9518330	18
2016	9499452	Courtright	US9499452	8
2017	9553489	Stornes; Matveev; Hoyland; Jorg; Ovrebo (Norway) {Wave energy}	US9553489	18
2017	9553322	Takahashi; Katou (Japan)	US9553322	20
2017	9574492	Owens	US9574492	19
2017	9562295	McDugle	US9562295	8
2017	9605222	Lien Chiow Tan (Singapore)	US9605222	12

154 Years ← Total time.................... Total pages → 5,381*

... in 408 Patents. With Schauberger's 22 and Meyer's 31 extras below, it's 461 Patents!

*This sum includes an assumed average for the foreign Patents for which I couldn't detect the exact number of pages. With the extras, it's about 6,000 pages of known Waterfuel Patents. Additionally, despite all efforts to include every Patent on Waterfuel technology, the list is far from complete. If you pulled all the referenced Patents listed inside the above Patents from the Patent Bureaus of Japan, France, Korea, Australia, The Netherlands, Germany, USA, UK, Italy, European Patent Office and so on, I can assure you that you'd end up with many more OFFICIAL PATENTS that have been known to hundreds of government officials for over a century and a half. Viktor Schauberger's Patents are listed separately below.

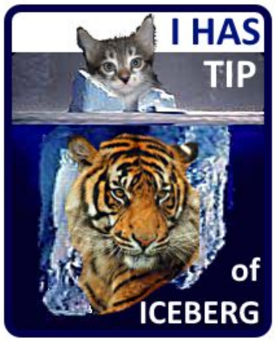

One way that you can use this information is when somebody tries to tell you that Waterfuel is limited to a few backyard mechanics on YouTube, or limited in time or scope or country or any other factor, just tell him he’s got a surprise coming – and show him this chapter! Also show him the Patents showcased in the next chapter.

All of Stan Meyer’s Waterfuel Patents

CANADA

- Electrical Particle Generator, **CA1213671A1**
- Hydrogen Air & Non-Combustible Gas Mixing Combustion System, **CA1227094A1**
- Gas Electrical Hydrogen Generator, **CA1228833A1**
- Hydrogen Injection System, **CA1231872A1**
- Hydrogen Gas Injection for Internal Combustion Engine, **CA1233379A1**
- Resonant Cavity Hydrogen Generator That Operates with a Pulsed Voltage Electrical Potential, **CA1234773A1**
- Hydrogen Generator System, **CA1234774A1**
- Controlled Hydrogen Gas Flame, **CA1235669A1**
- Water Fuel Injection System, **CA2067735A1**

EUROPE

- Hydrogen Gas Injection System for Internal Combustion Engine, **EP0086439A1, EP0086439B1**
- Electrical Generator Utilizing Magnetized Particles, **EP0098897A2, EP0098897A3**
- Controlled Hydrogen Gas Flame, **EP0101761A2, EP0101761A3, EP0101761B1**
- Resonant Cavity for a Hydrogen Generator, **EP0103656A2, EP0103656A3**
- Gas Electrical Hydrogen Generator, **EP0106917A1**
- Hydrogen Generator System, **EP0111573A1, EP0111574A1, EP0111574B1, EP0122472A2, EP0122472A3, EP0333854A4, EP0381722A4**

JAPAN

JP58202352A, JP58207610A, JP59038525A

JP59059889A, JP59129791A, JP59132784A

JP59148584A, JP59153922A

USA

- Hydrogen Gas Injector System For Internal Combustion Engine, **US4389981**
- Hydrogen Gas Burner, **US4421474**
- StartUp ShutDown For A Hydrogen Gas Burner, **US4465455**
- Gas Electrical Hydrogen Generator, **US4613304**
- Electrical Pulse Generator, **US4613779**
- Gas Generator Voltage Control Circuit, **US4798661**
- Controlled Process For The Production Of Thermal Energy From Gases And Apparatus Useful Therefore, **US4826581**
- Method For The Production Of A Fuel Gas, **US4936961**
- Process & Apparatus For The Production Of Fuel Gas & The Enhanced Release Of Thermal Energy From Such Gas, **US5149407**
- Hydrogen Gas Fuel And Management System For An Internal Combustion Engine Utilizing Hydrogen Gas Fuel, **US5293857A**

INTERNATIONAL

- Controlled Process for the Production of Thermal Energy from Gases and Apparatus Useful Therefor, **WO8901464A3**
- Process & Apparatus for The Production of Fuel Gas & Enhanced Release of Thermal Energy, **WO8912704A1**
- International Patent, **WO9207861A1**
- Hydrogen Gas Fuel & Management System For An Internal Combustion Engine, **WO9208046A1**
- Water Fuel Injection System, **WO9222679A1**

Schauberger's Patents

And we haven't even counted Schauberger's Patents granted in Austria, Germany, France, USA and UK. **Viktor Schauberger's Patents** on water energy are listed here separately, because like Leonardo da Vinci before him, he actually **observed** water motion and extracted energy from water in terms of 'biomimicry'. This means that rather than trying to change nature by standard engineering, Schauberger thinks in reverse and imitates how nature does it. I attached sample images just to you a general impression on how he extracts engineering ideas from observing natural phenomena such as whirlpools and water waves – to harness nature's energy.

To the best of my knowledge, this list is everything that Schauberger and his son have patented regarding water-to-energy and water/gas-related-motion (download links provided below):

- Austrian Patent № 113,487 (granted: 1929) "Einbau zur Wildbachverbauung und Flussregulierung" (Construction for Creating Wild Brooks & Flow Regulation)

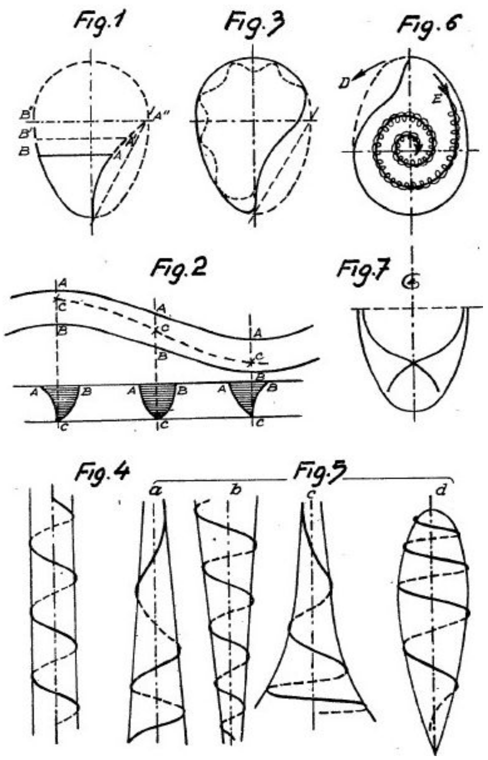

- Austrian Patent № 113,848 (granted: 1929) "Verfahren und Vorrichtung, um beim Schwemmen verschiedene Holzsortimente voneinander zu trennen" (Method and apparatus for separating various types of floating logs from each other)
- Austrian Patent № 113,526 (granted: 1929) "Vorrichtung zum Heranziehen und Überführen von Holzsortimenten aus Fangstauen in die Schwemmstrasse" (Device for Pulling and Transferring of Log Assortments from Jamming in Water Duct)
- Austrian Patent № 113,772 (granted: 1929) "Verfahren und Vorrichtung zum Ausländen und Weiterbefördern von Langhölzern aus Schwemmanlagen" (Method and Apparatus For Extracting and Dispatch of Long Timbers from Water Duct)
- Austrian Patent № 114,660 (granted: 1929) "Auslände- und Sortieranlage für verschiedene auf Schwemmstrassen gebrachte Hölzer" (Extracting and Sorting for Different Logs, Brought to Water Duct)
- Austrian Patent № 117,749 (granted: 1930) "Strahlturbine" (Jet Turbine)

- Austrian Patent № 118,713 (granted: 1930) “Auswurfvorrichtungen für Langholz u. dgl. aus Transportvorrichtungen, Riesen, Transportbändern u. dgl.” (Ejectors for Long Timber and the like from Transport Devices, Upper Ducts, Conveyor Belts and the like)
- US Patent № 1,775,871 (granted: 1930) “Method and Apparatus for Assorting Timber”
- Austrian Patent № 122,144 (granted: 1931) “Künstliches Gerinne zum Schwemmen von Holz u. dgl.” (Artificial Channel for Transporting Logs)
- Austrian Patent № 125,819 (granted: 1931) “Einrichtung zum Transport von Langhölzern” (Means for transport of long timbers)

FIG.4

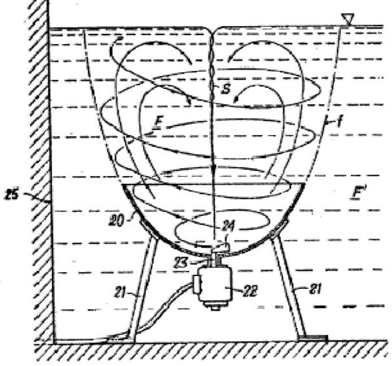

FIG.5

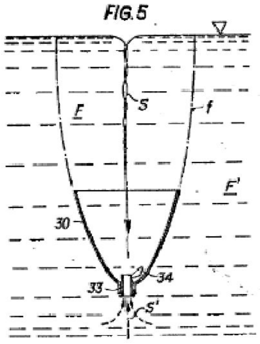

- Austrian Patent № 134,543 (granted: 1933) “Wasserführung in Rohren und Gerinnen” (Conduction of Water in Tubes & Channels)
- Austrian Patent № 136,214 (granted: 1934) “Anlage und Einrichtungen zur Regelung des Abflussgerinnes von Staubecken und Festigkeitserhöhung deren Abschlussdammes” (Installation & Correction of Flow in Draining Channels by a Contention & Stabilization of Dammed Water)
- Austrian Patent № 138,296 (granted: 1934) “Wasserführung” (Water Conduction)
- French Patent № 763,215 (granted: 1934) “Conduite d’Eau” (Water Duct)
- Austrian Patent № 142,032 (granted: 1935) “Verfahren zur Herstellung von Quellwasserähnlichem Trinkwasser” (Construction for Fabricating Tap Water like that of Natural Springs)
- Austrian Patent № 143,069 (granted: 1935) “Verfahren zum Heben von Flüssigkeiten oder Gasen” (A method for Lifting Liquids or Gases)
- French Patent № 785,965 (granted: 1935) “Procédé d’Obtention d’une Eau Potable Analogue à l’Eau Minérale” (similar to Austrian Patent № 142,032)
- Austrian Patent № 145,141 (granted: 1936) “Luftturbine” (Air Turbine)
- French Patent № 1,057,576 (granted: 1954) “Procédé et Dispositif pour la Commande de Processus de Décomposition ou de Composition Moléculaires dans des Milieux en

Mouvement" (Method and Apparatus for Controlling Process Decomposition or Composition in Molecular Environments in Motion)

- Austrian Patent № 196,680 (granted: 1958) "Rohrleitung für Flüssige und Gasförmige Medien" (Tubing for Flowing & Gaseous Media)

- German Patent № 1,442,734 (granted: 1968 to ***Walter*** Schauberger – Victor's son) "Engine Exhaust System"

- British Patent № 1,187,632 (1970) "Apparatus for Agitating Body of Fluid"

- Download the Patents of ***Viktor*** *Schauberger:* www.pks.or.at/viktor_patente.html
  and Patents of his son ***Walter*** *Schauberger:* www.pks.or.at/walter_patente.html

- General search of Austrian Patents: https://www.tmdn.org/network/opa (multilingual) and http://www.patentamt.at/ (German only)

More data in English about these inventions and Patents

- http://evgars.com/shauberg1.htm (has animations that clearly visualize Schauberger's principles and inventions)
- http://www.tuks.nl/Mirror/frankgermano_net/implosion_technology.htm
- http://www.tuks.nl/Mirror/frankgermano_net/viktorschauberger.htm
- http://www.tuks.nl/Mirror/frankgermano_net/viktorschauberger_b.htm
- https://borderlandsciences.org/journal/vol/35/n03/Zock_on_Victor_Schauberger.html
- http://www.freeenergyplanet.biz/free-energy-from-nature/
- https://borderlandsciences.org/cart/water-research/ (order publications here)
- https://frankgermano.wordpress.com/viktor-schauberger-the-repulsine/

Extra (not energy related)

These two Schauberger Patents are not related to Waterfuel but certainly go along his line of observing nature: *Austrian Patent № 166,644 (granted 1950) "Bodenbearbeitungsgerät" (Plow). German Patent № 809,725 (granted 1951) "Bodenbearbeitungsgeräte" (Tillage Equipment).* A website dedicated to superb-quality gardening tools inspired by Viktor Schauberger (www.kupferspuren.at) provides a clue to the considerations behind these patents (quote): ***"Viktor Schauberger came to the assessment that cultivating the soil with copper implements*** [tools, utensils] ***would be more beneficial to the Earth and lead to healthier plants. In his writings, he listed several reasons for this."***

Canadian Waterfuel Patents

Listed by Rex Research: www.rexresearch.com/hhopat/hhocdnpats.html

The Patents can be retrieved from the European Patent Office
http://worldwide.espacenet.com/advancedSearch?locale=en_EP

General

Canadian Patent № Ca2229694
Electrolysis Apparatus For Internal Combustion Engine Enhanced Fuel Efficiency

Canadian Patent № Ca2513539
Electrolyzer Apparatus And Method For Hydrogen Production

Canadian Patent № Ca2143448
Electrolysis Apparatus For Producing Hydrogen

Canadian Patent № Ca1215672
Electrolytic Production Of Hydrogen

Canadian Patent № Ca1153333
Method For Electrolytic Production Of Hydrogen

Canadian Patent № Ca1247038
Process For Obtaining Hydrogen And Oxygen From Water

Canadian Patent № Ca2570922
Hydrogen Gas Electrolysis And Supply Apparatus

Canadian Patent № Ca1137921
Catalysing Gaseous Hydrogen Evolution In Aqueous Alkaline Electrolysis

Canadian Patent № Ca2479427
Hydrogen-Assisted Electrolysis Processes

Water Injection

Canadian Patent № Ca1213738
Fuel Injector Assembly With Water

Canadian Patent № Ca2154452
Dual Fuel Injection Nozzle With Water Injection

Water+Fuel Mix

Canadian Patent № Ca2054493
Motor Fuel Composition Having Enhanced Water Tolerance

Canadian Patent № Ca2509286
Water Blended Fuel Composition

Canadian Patent № Ca2204695
Self Evacuating Water-Separating Fuel Filter

Canadian Patent № Ca2344044
Water Fuel Emulsified Compositions

Canadian Patent № Ca1096621
Vaporization Of Electrically Conductive Water-Hydrocarbon Emulsion

Canadian Patent № Ca2315094
Supercritical Water Fuel Composition And Combustion System

Canadian Patent № Ca2397623
Fuel-Water Emulsions Containing Emulsifiers

Canadian Patent № Ca2341437
Vaporization Device For Converting Fuel And Water Into Hydrogen

Canadian Patent № Ca1303192
Eliminating Air And Water From Fuel

Canadian Patent № Ca2380091
Sub-Critical Water-Fuel Composition And Combustion System

Canadian Patent № Ca2210256
Platinum Metal Fuel Additive For Water-Containing Fuels

Canadian Patent № Ca2499064
Converting Mixture Of Water And Ethanol Into Fuel

Chapter 21.

PATENT SHOWCASE

In the previous chapter you've seen a list of 5,300 pages of known Waterfuel Patents and there are many more around the world. Now that you've seen how many Patents from how many countries and from how many years, take a few minutes and examine samples from this "ocean" of Waterfuel patents. Not necessarily the best inventions – these are plainly SAMPLES to showcase the breadth and width of Waterfuel patenting – ***and the diverse ways that inventors took to approach the goal of extracting energy from water.*** Although many of these Patents can serve in multiple applications, I chose to organize this showcase into the following categories:

Hydrogen Fuel Generator Patents

*Inventor: **William Rhodes**. Patent № 3310483 "Multicell Oxyhydrogen Generator" – 1967. (UK Patent № GB189313723A)*

1This invention relates to a multicell oxyhydrogen generator and more particularly to a multicell oxyhydrogen generator employing a plurality of spaced plates operating electrically in series with each other and an electrolyte therebetween.

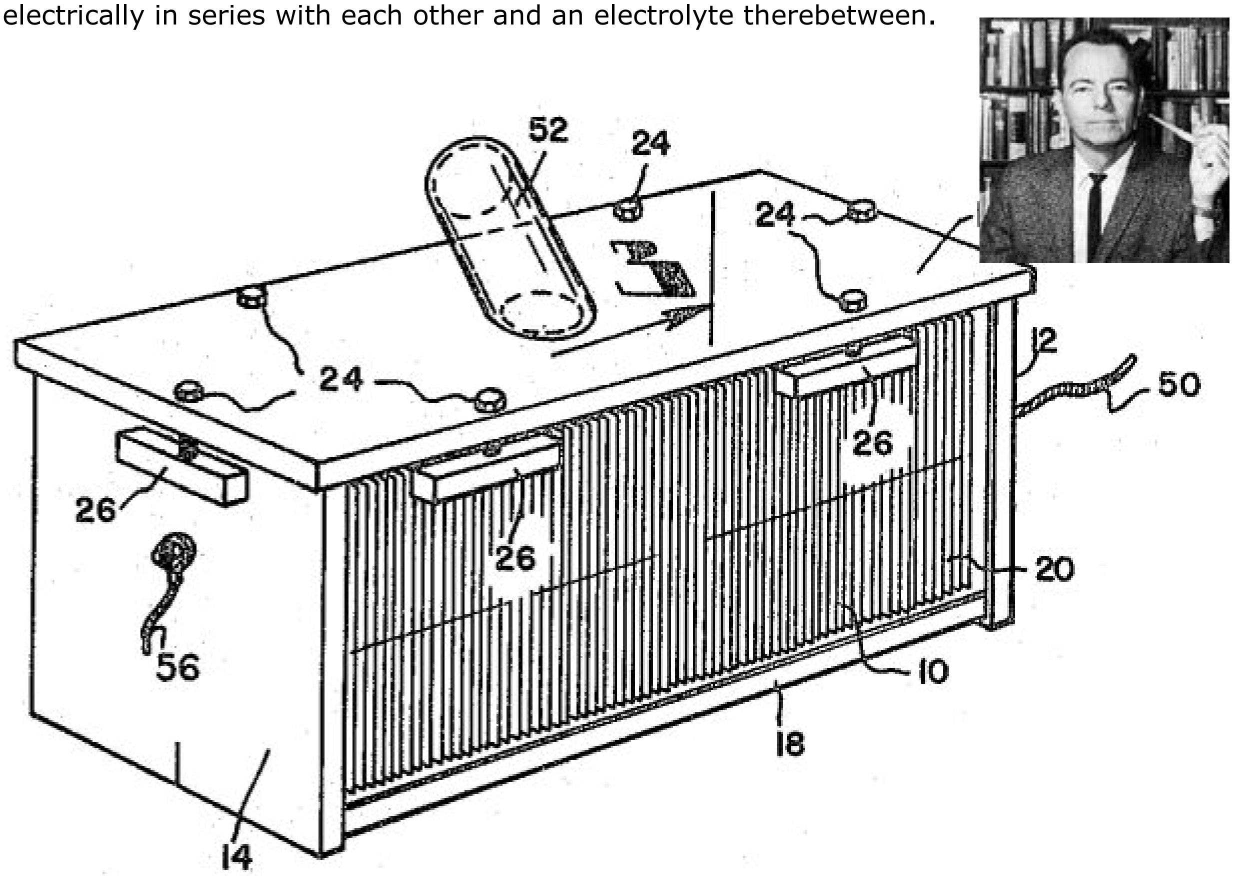

I find it very odd that when searching the USPTO (US Patent Office) Database at *http://patft.uspto.gov/netahtml/PTO/search-bool.html* for this Patent number, nothing comes up, and what's more, **they DO recognize it as Waterfuel-related and welding-related** because a list of similar US Patents comes up, including two from Yull Brown. You can download it here: *http://www.freepatentsonline.com/3310483.pdf* and even at the USPTO directly here: *http://pdfpiw.uspto.gov/.piw?Docid=3310483* – yet it's still odd about the search. And it got weirder when I searched every UK Patent database I know – including the gov't site and the intellectual property office – and Rhodes' UK patent is nowhere to be found **even though the UK Patent is cited in at least two US Patents**. Are they trying to hide Rhodes under the carpet? Seriously?? In this open information age?! ~Ozzie

Inventor: **Ernst Spirig**[142]. Patent № 4206029
“Detonating gas generator” – 1980

A generator for oxyhydrogen gas comprises a plurality of flat metal electrodes mounted parallel with ring-like spacers between each pair of adjacent electrodes and bolts clamping the spacers and electrodes together to provide a sealed cell between each pair of electrodes within the periphery of the respective spacer.

An inlet for electrolyte is connected to one outer cell and an outlet for the gas is connected to the outer cell. The electrodes are imperforate except for apertures adjacent to the tops of the cells and in use a DC power source is connected across outer electrodes.

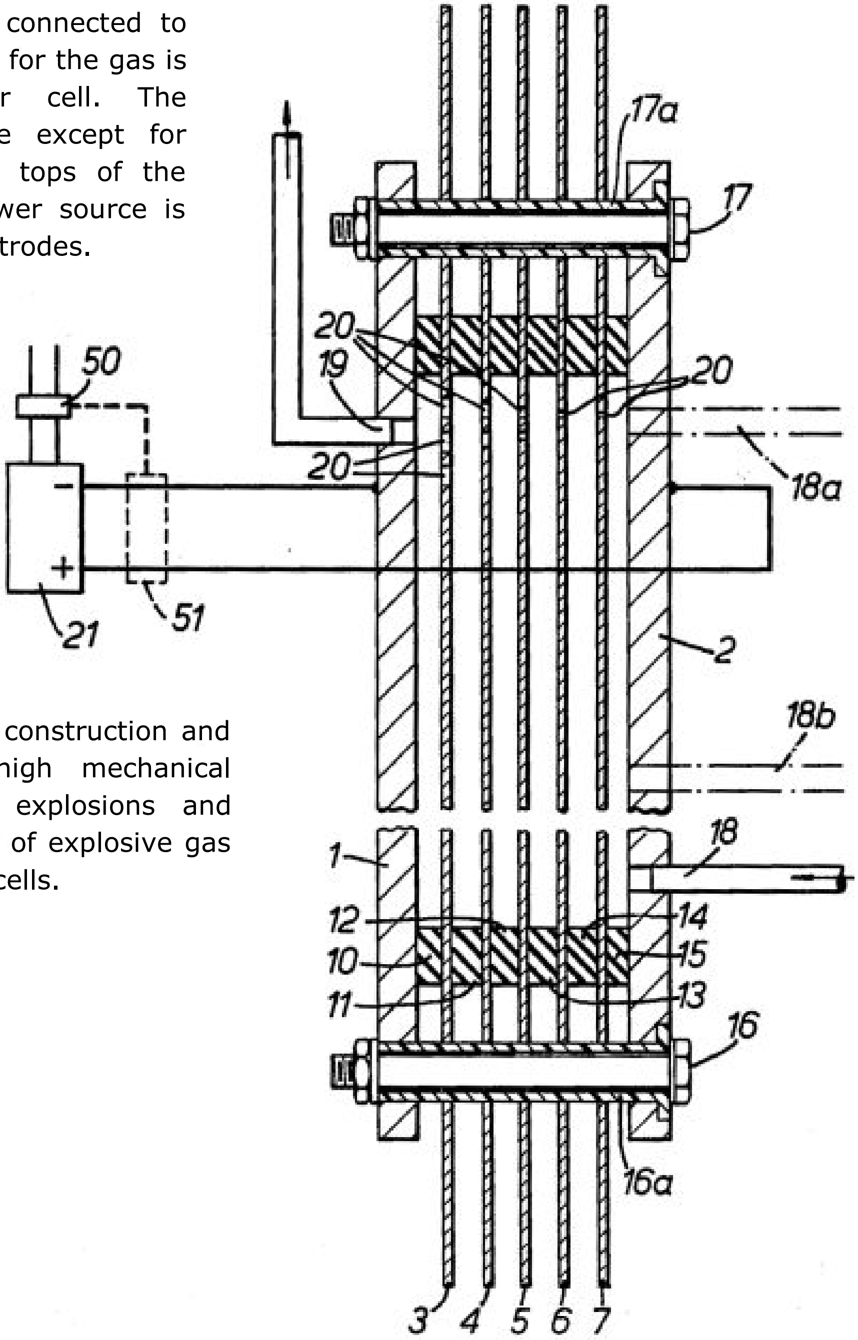

The generator is of simple construction and achieves good cooling, high mechanical strength against internal explosions and ensures a minimal quantity of explosive gas in the upper regions of the cells.

---

[142] His comany in Rapperswil, Switzerland, designs and manuactures precision flame source (micro- and mini-torches) for delicate glass work inclusive quartz materials. Contact info: http://www.glassonweb.com/directory/details.php?id=1683

Inventor: Richard Haas. Patent № 4339324
"Polycell gas generator" – 1982

An improved gas generator comprising a multiplicity of electrolytic cells arranged to accommodate a series current path, parallel electrolytic flow and minimized leakage current paths, in a stacked plate configuration that affords a high degree of portability at low cost.

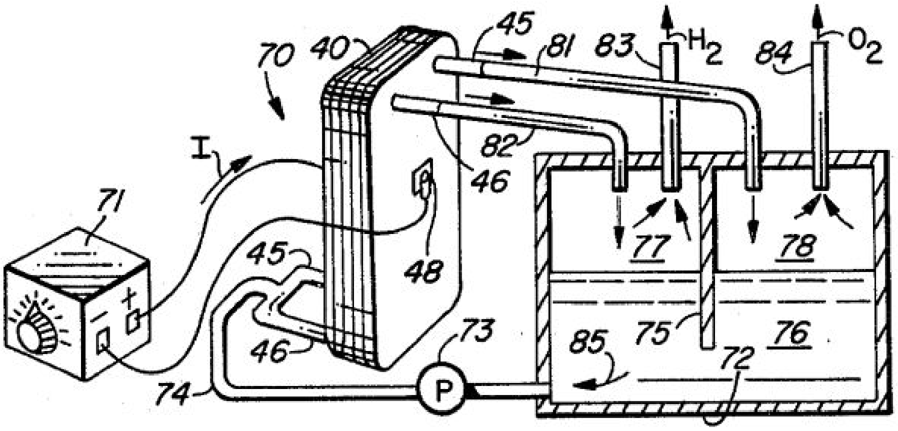

Inventor: Ronald Papineau. Patent № 4371500
"Apparatus for generating hydrogen" – 1983

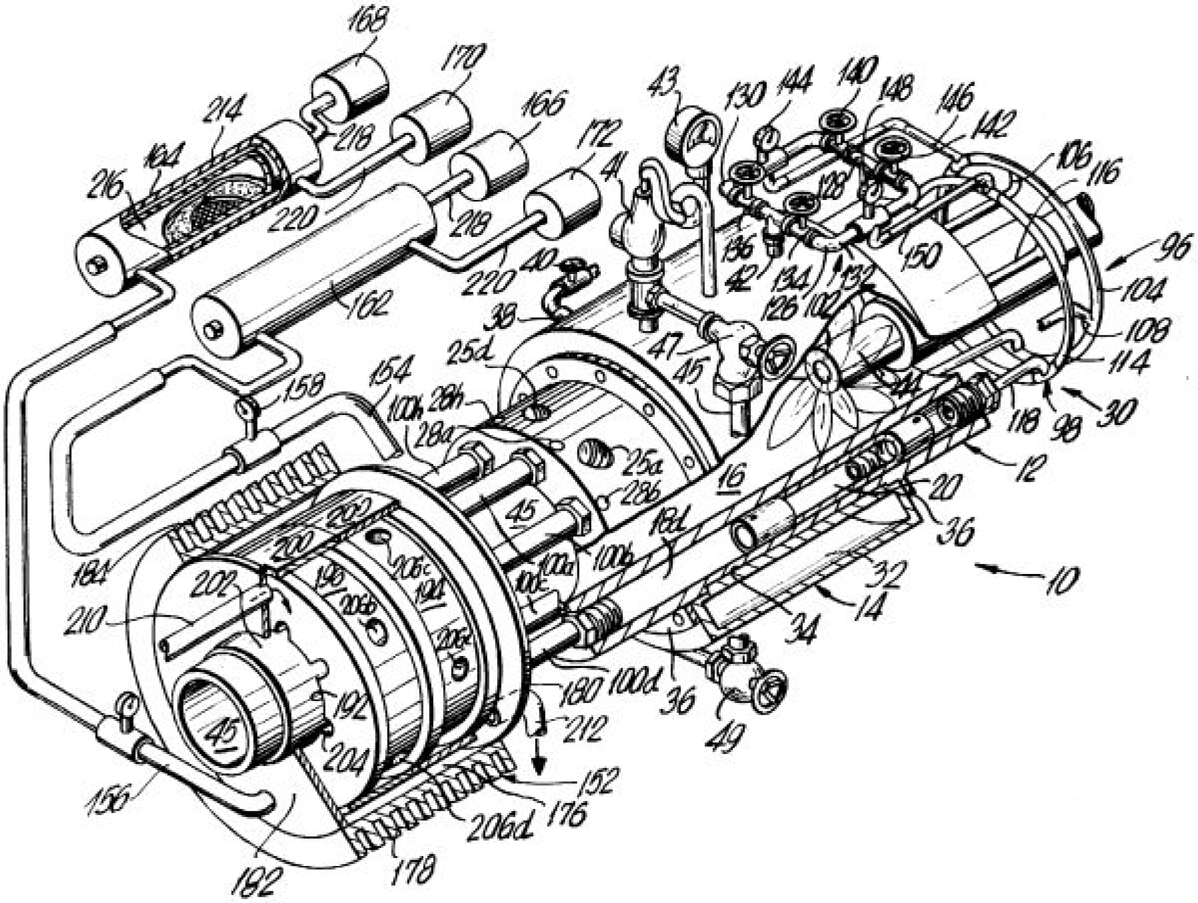

A hydrogen generating system, which produces hydrogen instantaneously from water ready for use upon demand. The system includes a reactor that has reaction zones wherein catalyst and elevated temperatures generate hydrogen from steam. The zones in the reactor can be in the form of tubes about a heat generating chamber, and the zones are adapted to be interconnected to each other, to atmosphere, and to the source of steam, all to maximize the generation of hydrogen by providing a reactor of optimum flexibility. The present invention also is directed to systems, which include the hydrogen generating system and which utilize the generated hydrogen as a fuel or as a chemical.

Inventor: Richard Henes. Patent № 4425215

“Gas generator” – 1984

A gas generator assembly comprising a three plate cell employable in a series of cells to form a generator having a minimum number of parts.

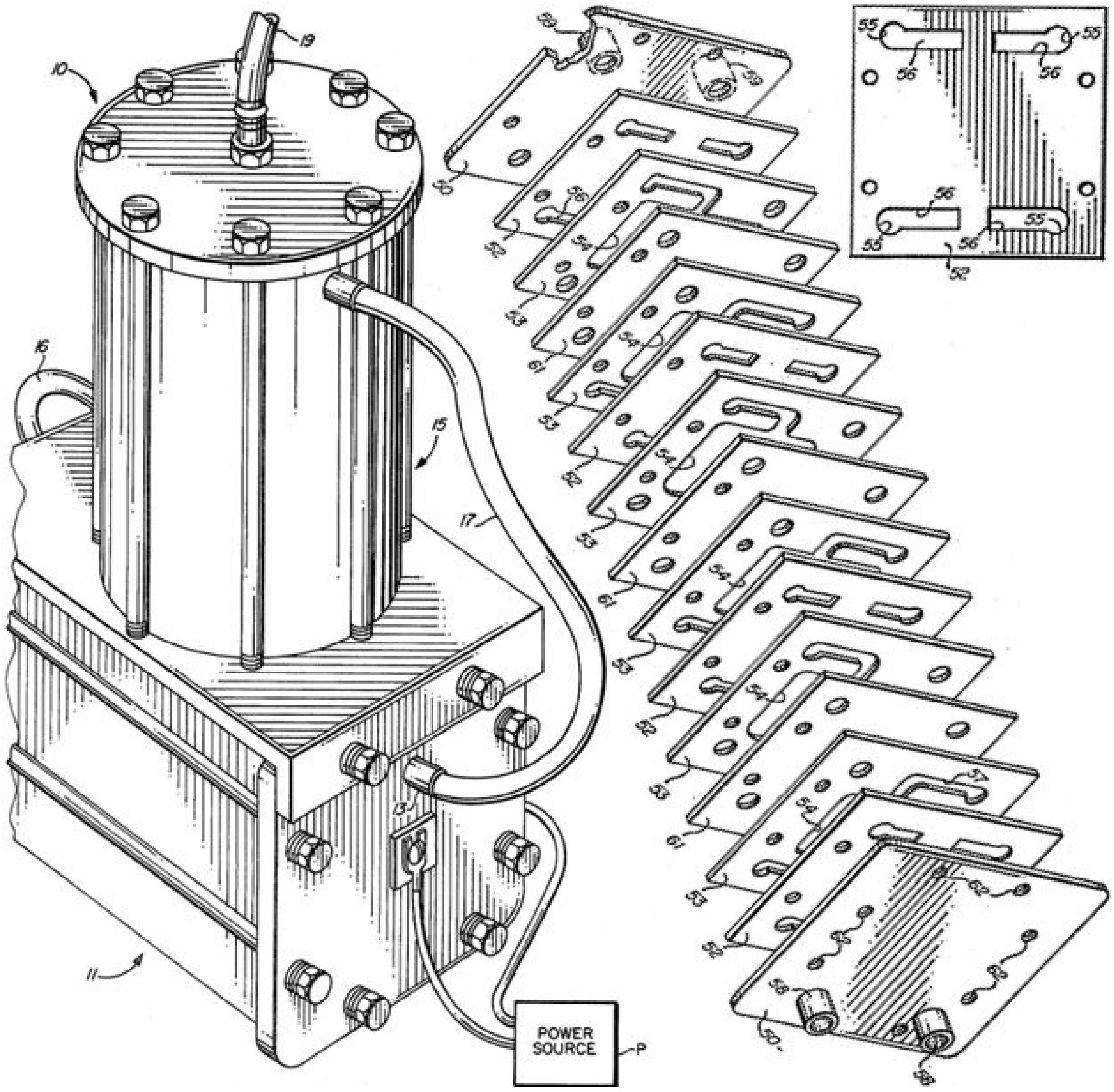

Inventors: Mary Nolan and Anthony B. LaConti. Patent № 4488951 "Integrated electrochemical/chemical oxygen generating system" – 1984

The integrated electrochemical/chemical oxygen generating system of the invention includes a water electrolyzer combined with a chemical oxygen generating subsystem which converts hydrogen from the electrolyzer to a decomposable oxygen source such as hydrogen peroxide. The total oxygen output of such a system is greater than that possible from the electrolyzer alone while safely disposing of the electrochemically generated hydrogen.

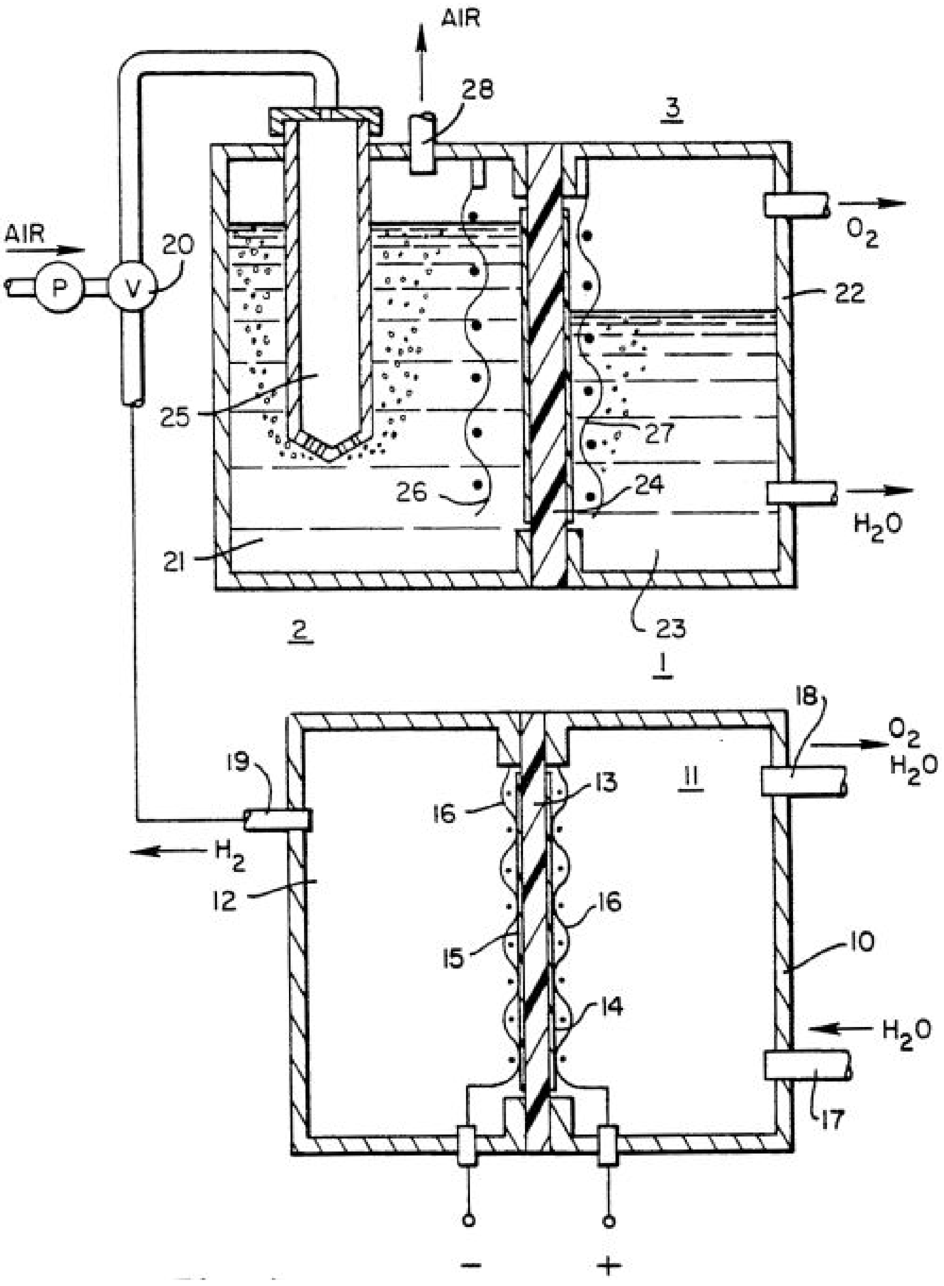

Inventor: Charles Neefe. Patent № 4511450 "Passive hydrogel[143] fuel generator" – 1985

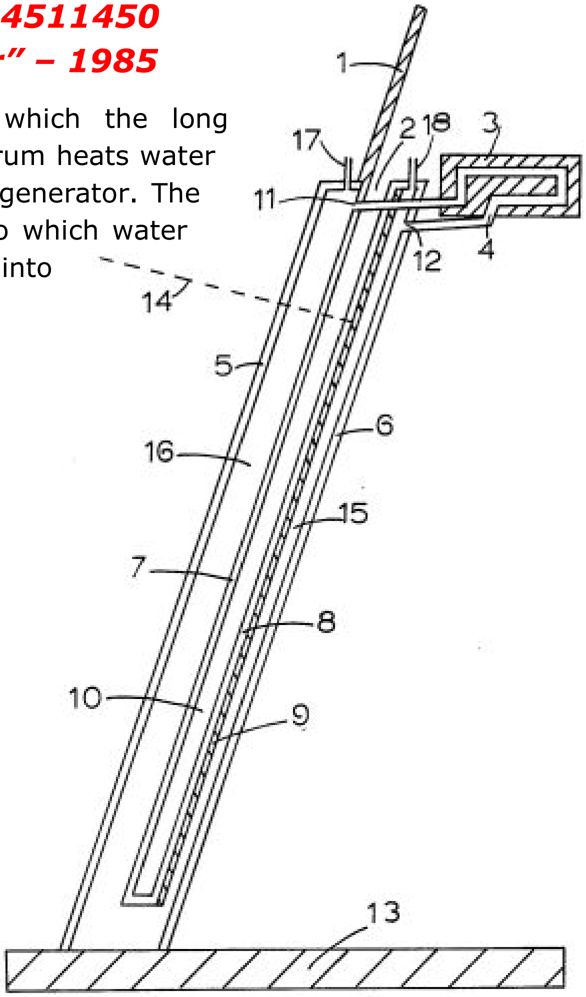

A passive hydrogen oxygen generator in which the long wavelength infrared portion of the sun's spectrum heats water to provide circulation of the water within the generator. The shorter wavelength portion of the spectrum to which water is transparent is used in splitting water into hydrogen and oxygen by photoelectrolysis.

Inventor: **Stanley Meyer**. Patent № 4613304 "Gas electrical hydrogen generator" – 1986

A hydrogen gas generator system for converting water into hydrogen and oxygen gasses, in combination with a magnetic particle accelerator for voltage/current electrical potential generation. The hydrogen gas generator encompasses an array of plates immersed in a housing and having natural water pass therethrough.

Direct current, voltage dependant/current limited, potential applied to the plates causes the hydrogen/oxygen gasses to disassociate from the water molecule. The upper portion of the container is a hydrogen/oxygen mixture collection chamber for maintaining a predetermined gas pressure. There is introduced into the hydrogen/oxygen collection chamber, from a source, a substantial quantity of permanently magnetically polarized particles. Attached to the gas collection chamber outlet is a non-magnetic, non-conductive closed loop of tubing.

---

[143] This is not a typo. A 'hydrogel' is a thick gel that holds many times its weight in trapped water. It has a number of medical and industrial applications.

The polarized magnetic particles are caused to circulate in the closed loop tubing by an electrical and/or mechanical pump. A pick-up coil wound around the tubing will have a voltage induced therein as the magnetic field of the polarized magnetized gas particles pass therethrough. The induced voltage has utilization as an electrical power source. In that the hydrogen/oxygen gasses are not polarized the gasses will seek a pressure release via an outlet. The hydrogen and oxygen gasses may be utilized such as in a burner system.

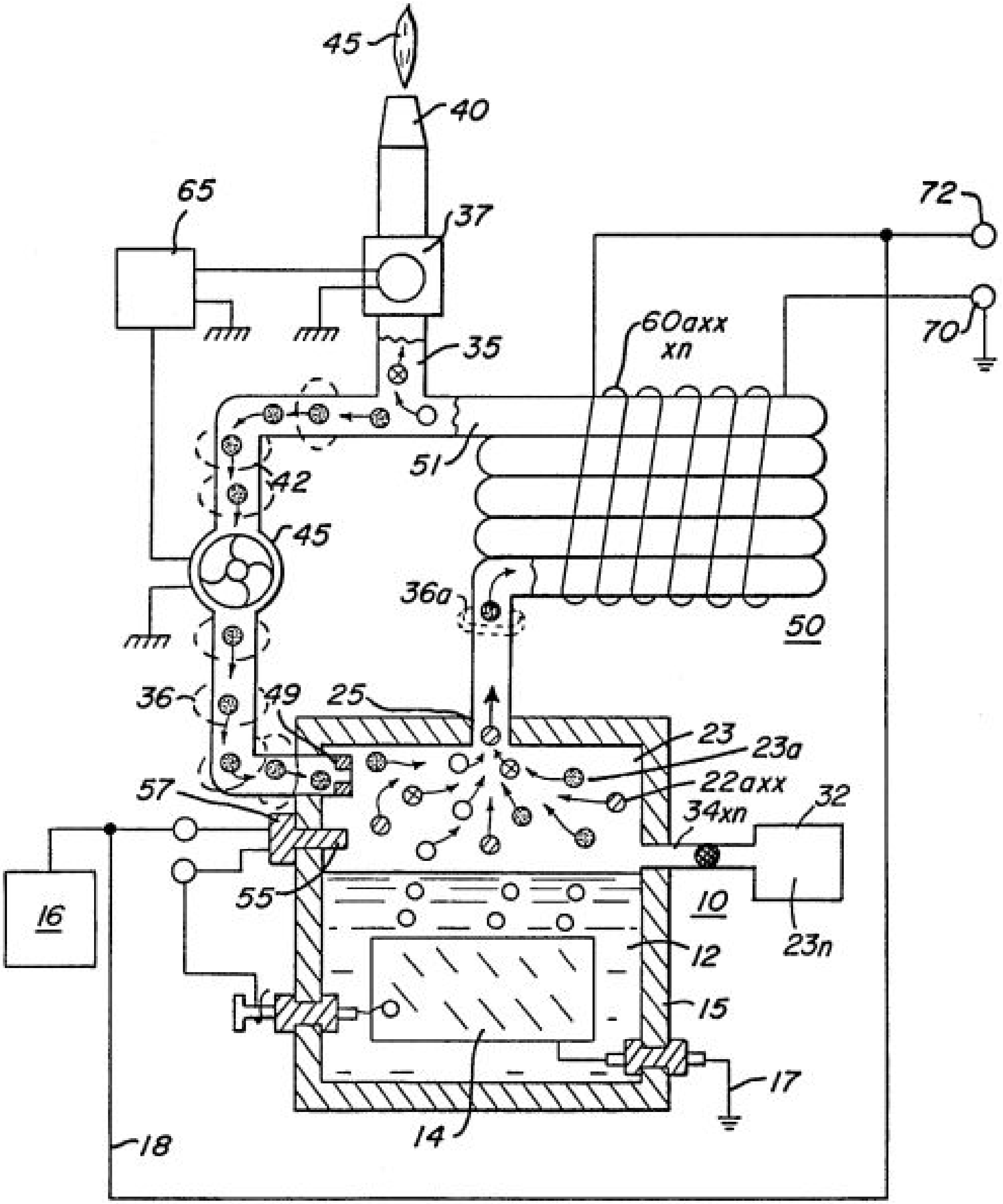

Inventor: Robert Buxbaum. Patent № 6461408
"Hydrogen generator" – 2002

An apparatus for extracting a gas, in particular hydrogen, from a fluid stream utilizing a plate membrane flattened with a wave spring on the low pressure side of the membrane and a turbulence generator on the high pressure side. Alternately, the membrane is folded and wrapped against a central conduit within the membrane fold. Extraction membranes have a substrate layer of Ta—W, V—Co, V—Pd, V—Au, V—Cu, V—Al, Nb—Ag, Nb—Au, Nb—Pt, Nb—Pd, V—Ni—Co, V—Ni—Pd, V—Nb—Pt or V—Pd—Au alloy or combination thereof and a first layer affixed to the outer surface of the substrate towards a mixed gas flow which is composed of palladium, platinum, rhodium, or palladium alloys.

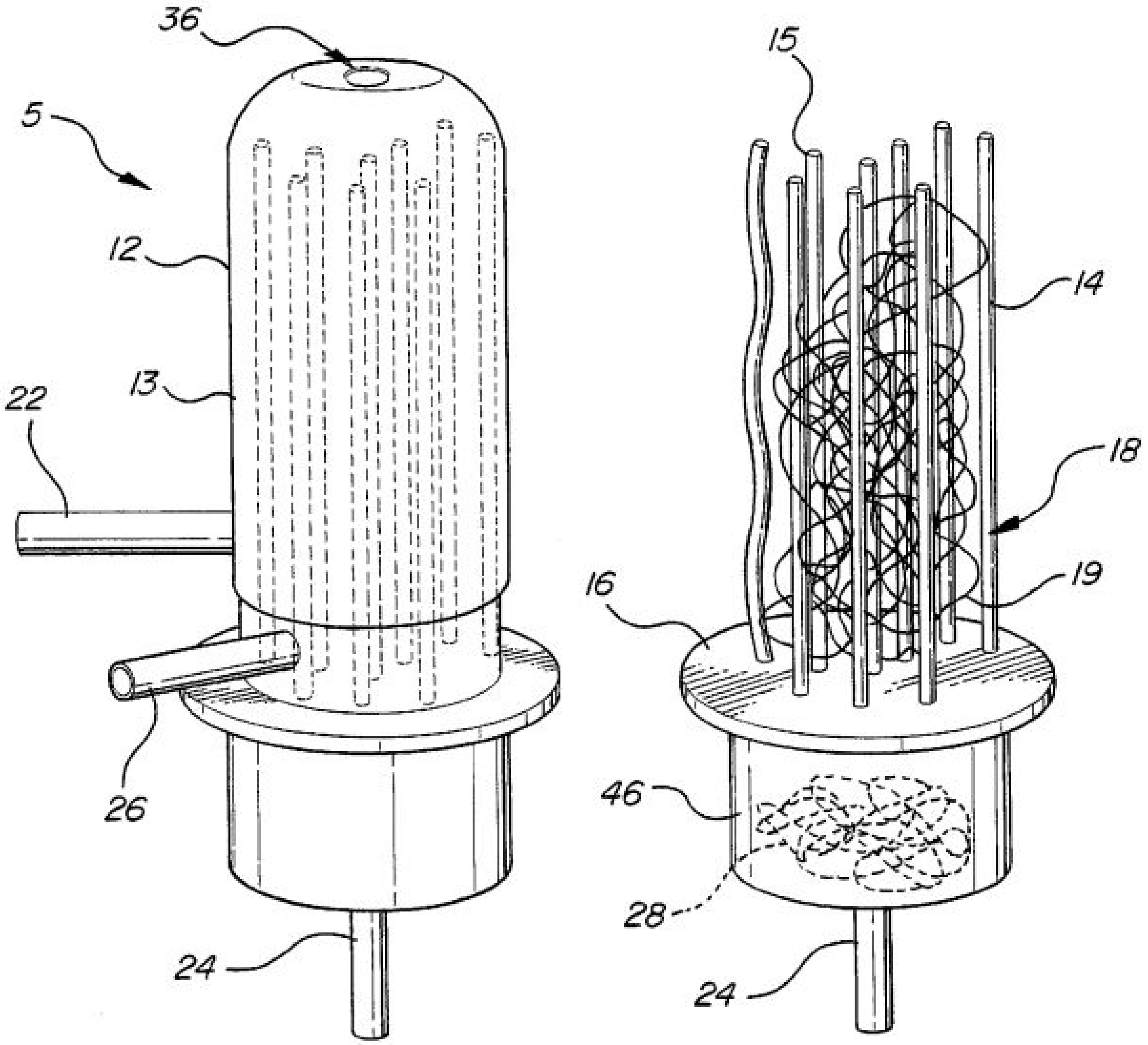

Inventors: Ted Suartt; Robinson Gourley (WaterIonTechnologies.com, see Chapter 12). ***Patent № WO 2008/131126 A1* "Method for Making a Gas from an Aqueous Fluid, Product of the Method, and Apparatus Therefore" – 2008***

* Also published as Chinese Patent CN101663232A, European Patents EP2137098A1 and EP2137098A4, and US Patent US20080257719.

An electrolyzer includes a first electrode in the form of an inner tank formed of a material capable of being magnetized and a second electrode in the form of an outer tank formed of a material capable of being magnetized. The inner tank is nested within the outer tank. A spacer basket formed of a plastic material is disposed between the inner tank and the outer tank.

The inner tank includes a positive terminal in electrical communication with a DC power source and the outer tank includes a negative terminal in electrical communication with the DC power source. A magnet for magnetizing the outer tank has a field sufficient to affect the inner tank. Electrolysis within the tank produces a flammable gas** having a first hydrogen atom bonded to an oxygen atom and a second hydrogen atom bonded to the first hydrogen atom.

** "Applicants refer to this gas as "SG Gas."

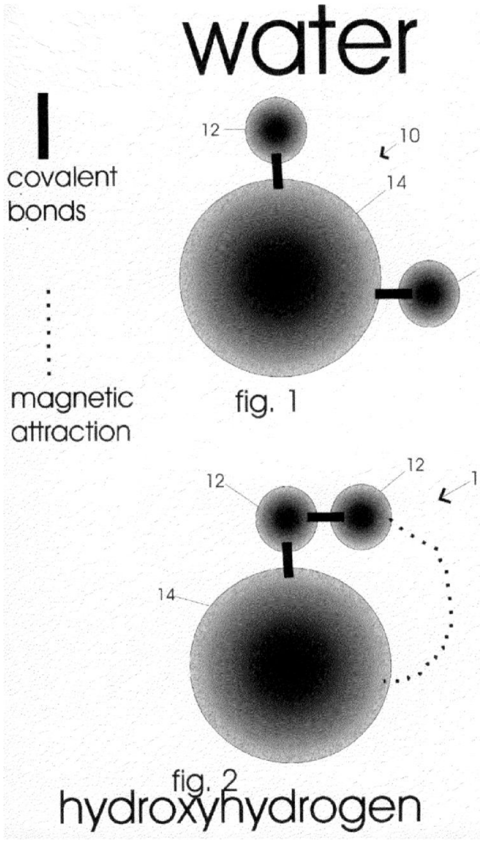

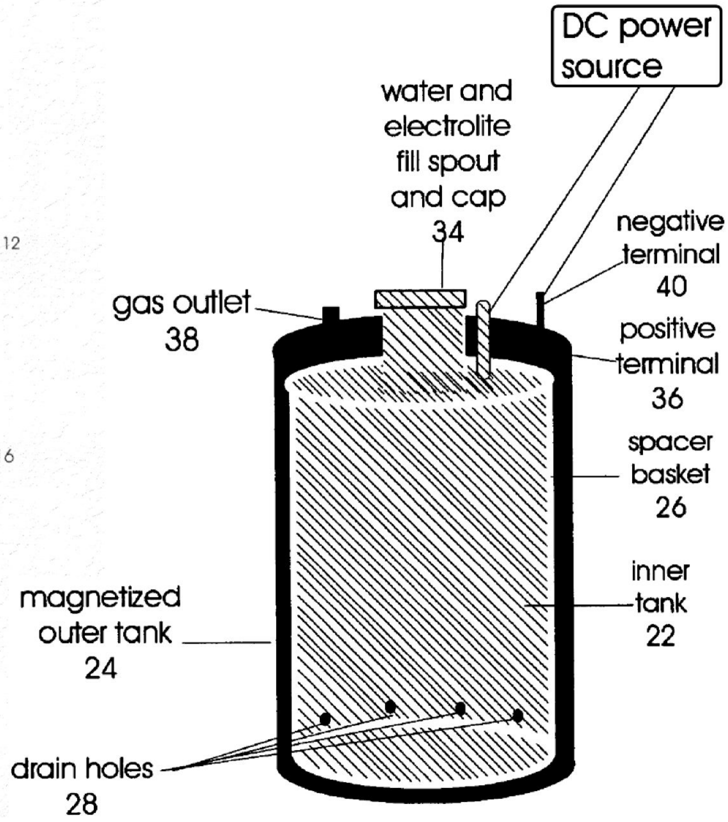

Inventor: Yang-Chen Lin. Patent № 6372100 “Rich oxygen gas generator” – 2002

A rich oxygen gas generator includes an electrolytic tank for electrolyzing water to hydrogen and oxygen gases, a mixing tank containing a carbon hydrogen compound solvent and hydrogen and oxygen gases from the electrolytic tank, a pump for pumping air to the mixing tank to speed up evaporation of the carbon hydrogen compound solvent and a burner to receive mixing hydrogen and oxygen gas from the electrolytic tank and compound solvent gas from the mixing tank to produce flame. Flame temperature and heat may be changed and adjusted through controlling flow rate and volume of the pumping air.

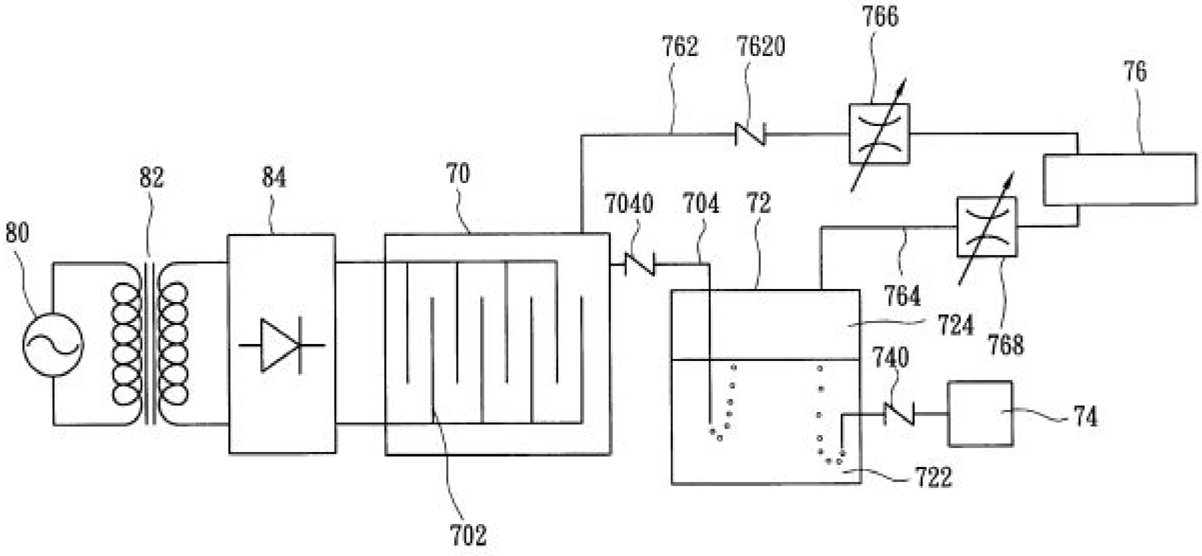

Inventor: Dennis Klein. Patent № 6689259 “Mixed gas generator” – 2004

The present invention is a device, which generates a hydrogen and oxygen gas, preferably used for welding. The hydrogen and oxygen gas is generated by an electrolyzing process. Electrolyte is pumped into the hydrogen-oxygen generator where the gas is separated from the electrolyte by applying a direct current voltage across the generator. Oxygen is formed in one part, hydrogen in the other and then combined to form the gas. As the gas is generated, pressure is built up. When the pressure reaches an operating pressure, the gas is pumped via the plumbing system into the electrolyte reservoir, through a filtering process, and stored in a gas reservoir that is connected to a supply line. In operation the supply line is attached to a torch.

Watch “What happened to this invention” on YouTube:
https://www.youtube.com/watch?v=m2wG90QIZSU

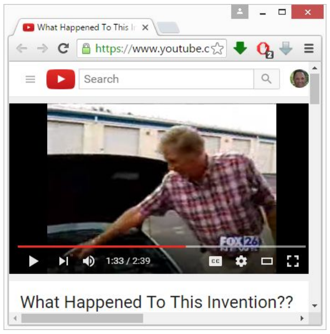

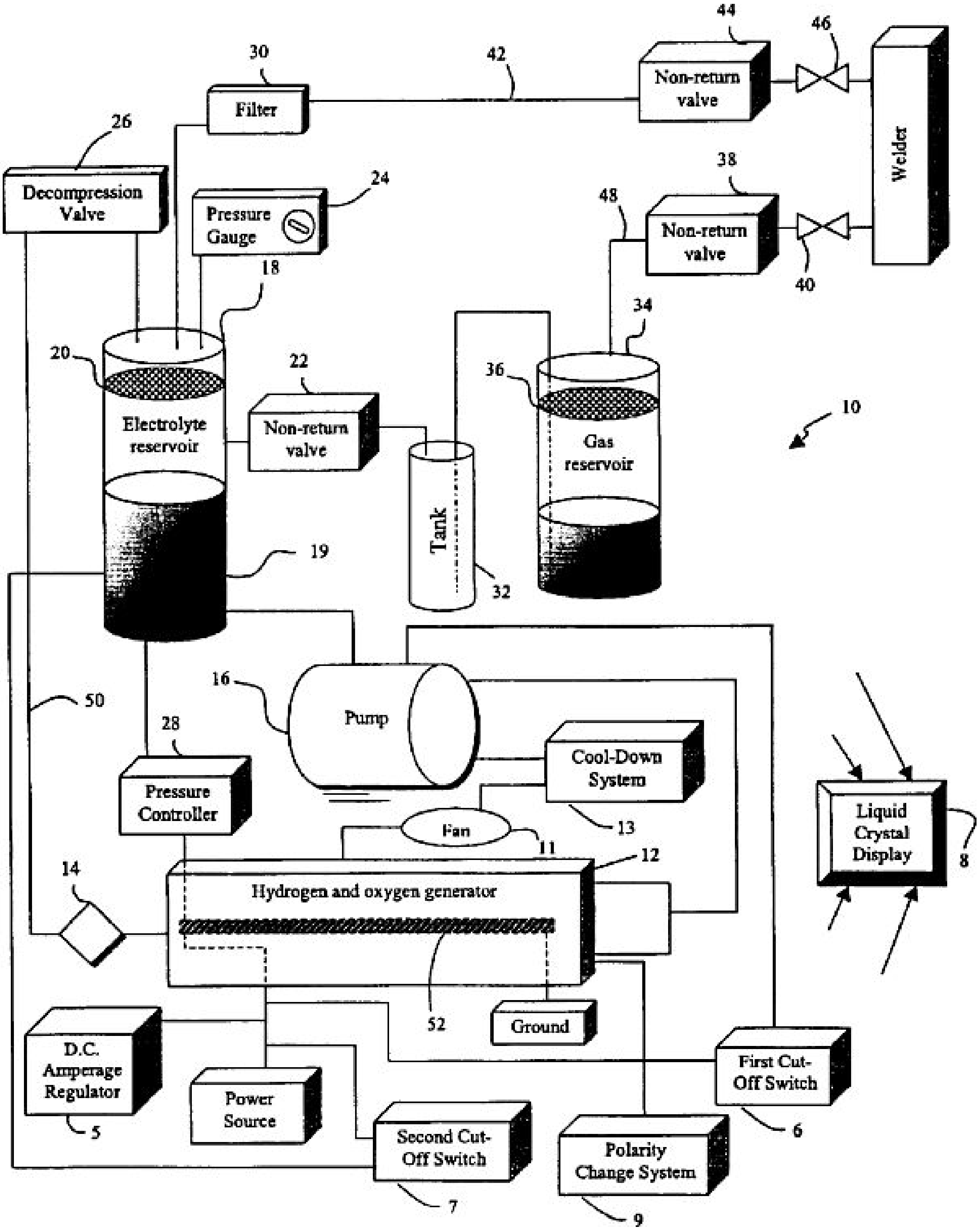

44
46
30
42
Filter
Non-return valve
Welder
26
Decompression Valve
Pressure Gauge
24
38
48
Non-return valve
40
18
34
20
36
22
Electrolyte reservoir
Non-return valve
Gas reservoir
10
Tank
19
32
16
Pump
50
28
Cool-Down System
Pressure Controller
13
Liquid Crystal Display
8
Fan
11
12
14
Hydrogen and oxygen generator
52
Ground
D.C. Amperage Regulator
First Cut-Off Switch
5
Power Source
6
Second Cut-Off Switch
Polarity Change System
7
9

Inventor: Ryushin Omasa (Japan). Patent № 7459071; also published as CA2445717C, WO2002090621, CN1237208C, CN1505698A, EP1398395A1, EP1398395A4, CA2445717A1, US20040094408 and US20090045049.

"Hydrogen-oxygen gas generator and method of generating hydrogen-oxygen gas using the generator" – 2008

A hydrogen-oxygen gas generator comprising an electrolytic cell, an electrode group formed from an anode and a cathode mutually installed in that electrolytic cell, a power supply for applying a voltage across the anode and cathode, a gas trapping means for collecting the hydrogen-oxygen gas generated by electrolyzing the electrolyte fluid and a vibration-stirring means. The gas trapping means is comprised of a lid member installed on the electrolytic cell, a hydrogen-gas extraction tube connecting to the hydrogen-oxygen gas extraction outlet of that lid member.

A vibration-stirring means for stirring and agitating the electrolytic fluid is supported by support tables. The distance between the adjacent positive electrode and negative electrode within the electrode group is set within a range of 1 to 20 millimeters. The vibration-stirring means is comprised of vibrating motors vibrating at 10 to 200 Hertz, and vibrating blades vibrating within the electrolytic cell and unable to rotate are attached to a vibrating rod linked to the vibrating motors.

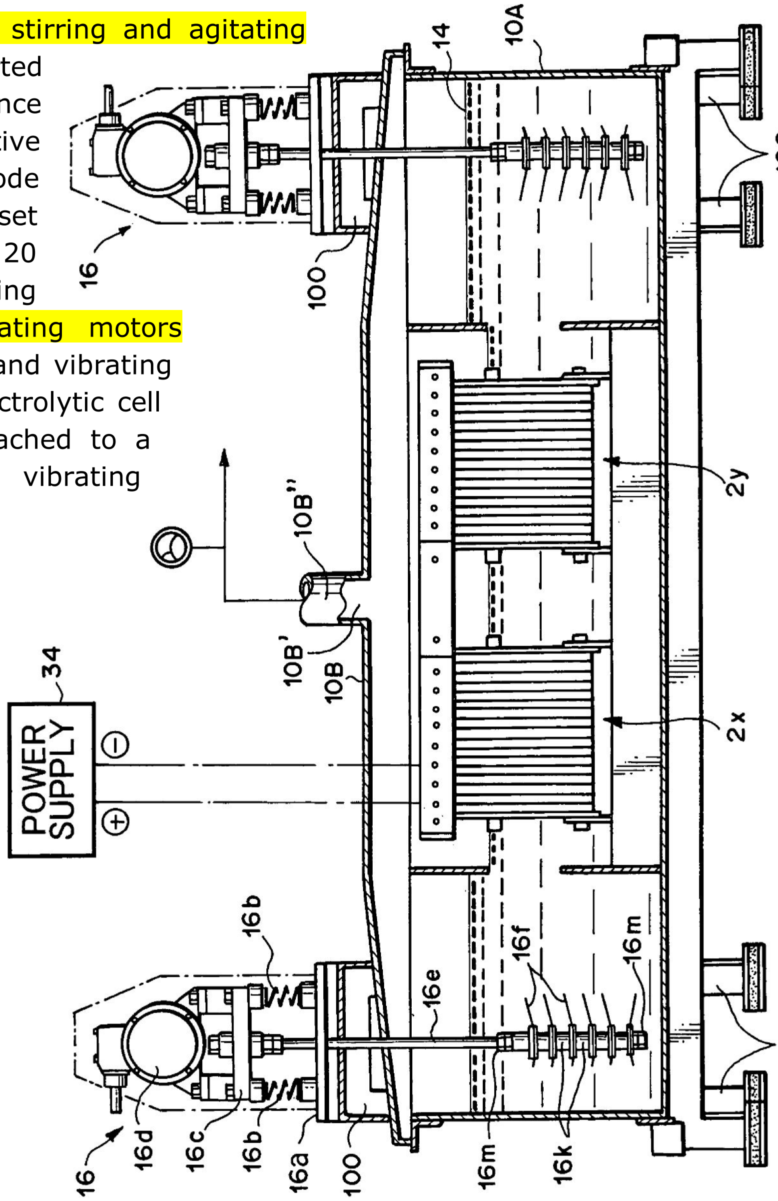

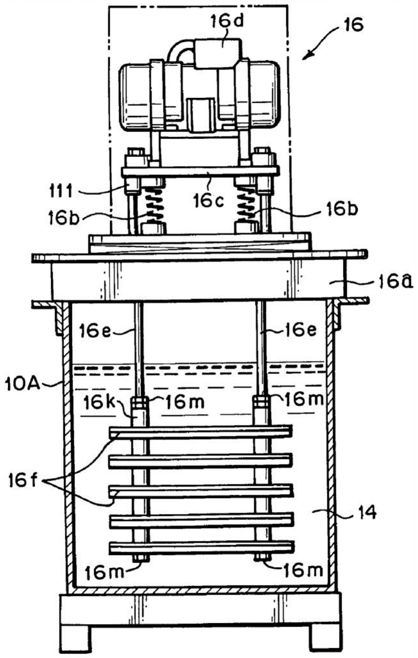

Inventor: Slavcho Slavchev. Patent № 6911126
"Electrolytic regenerator" – 2005

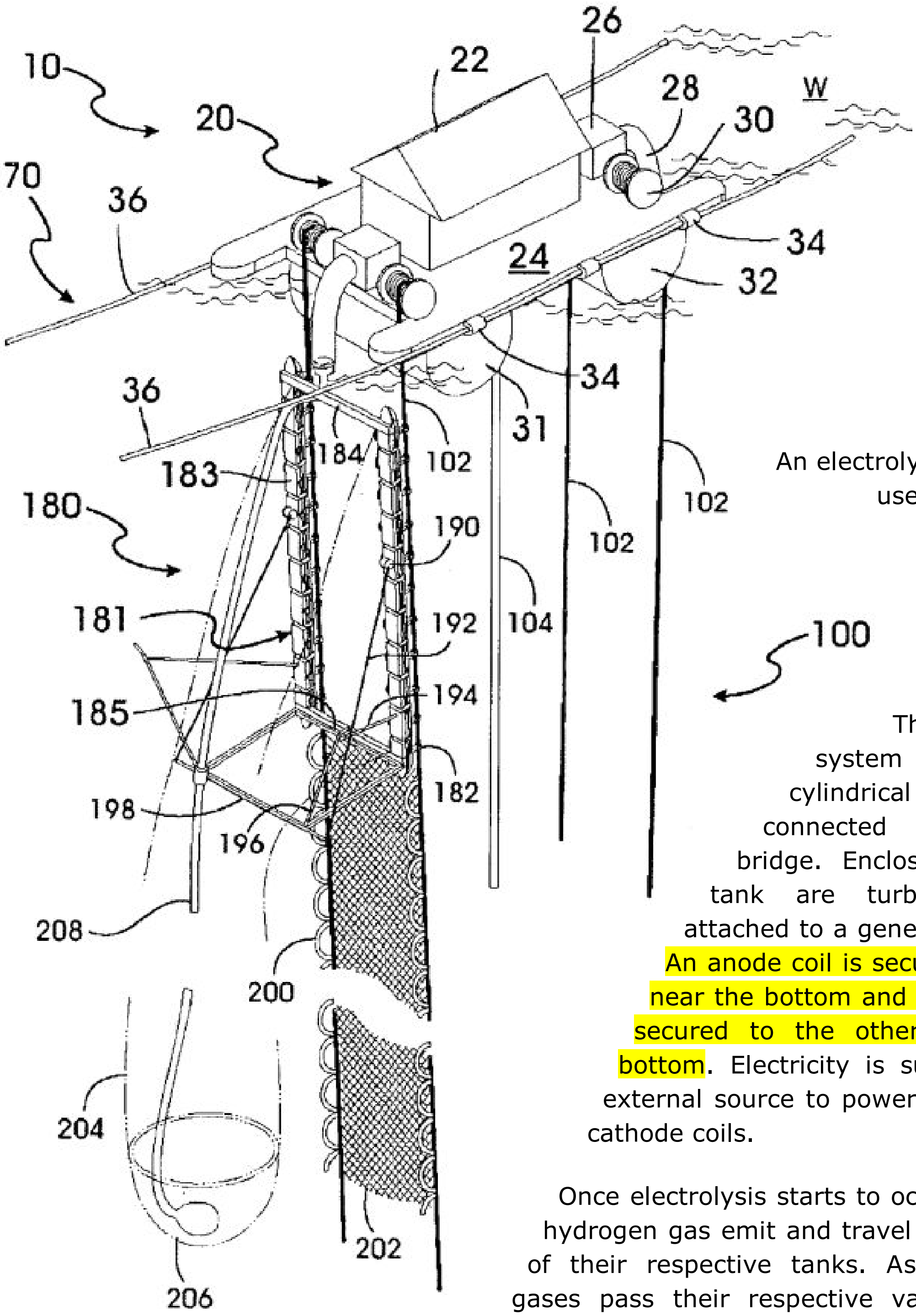

An electrolysis system to be used in a salt-water application at a predetermined depth.

The electrolysis system comprises two cylindrical tanks that are connected by an ionic bridge. Enclosed within each tank are turbine assemblies attached to a generator by a shaft. An anode coil is secured to one tank near the bottom and a cathode coil is secured to the other tank near its bottom. Electricity is supplied from an external source to power said anode and cathode coils.

Once electrolysis starts to occur, oxygen and hydrogen gas emit and travel towards the top of their respective tanks. As the respective gases pass their respective valves, they turn their respective turbines, which enable their respective generators. Once the generators are providing sufficient power for the anode and cathode coils to perform electrolysis, the external power supply is disconnected.

Oxygen and hydrogen is then stored.

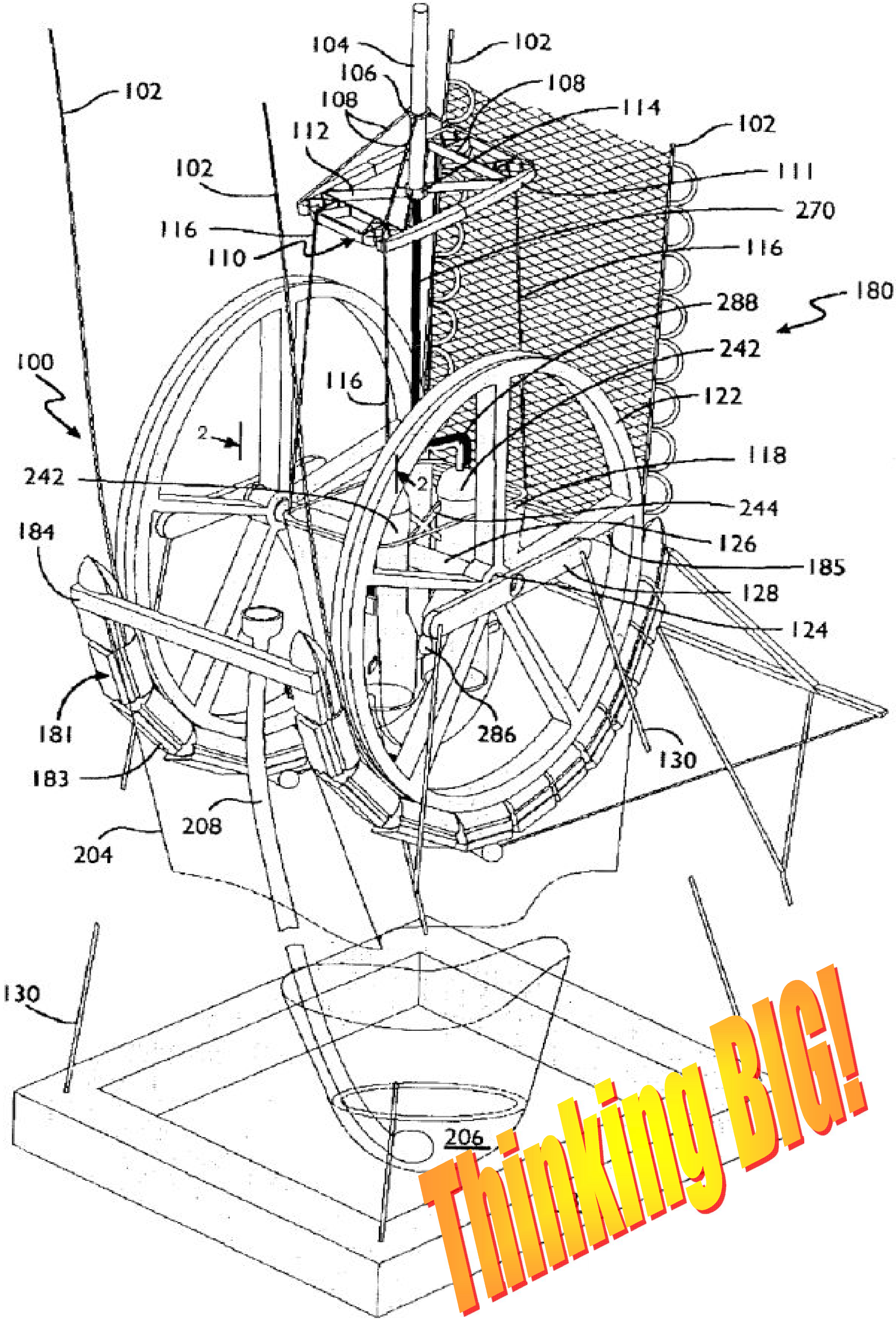
104
102
106
108
102
108
114
112
102
102
111
270
116
110
116
180
288
242
100
116
122
2
242
118
2
244
184
126
185
128
124
181
286
183
130
208
204
130
206
Thinking BIG!

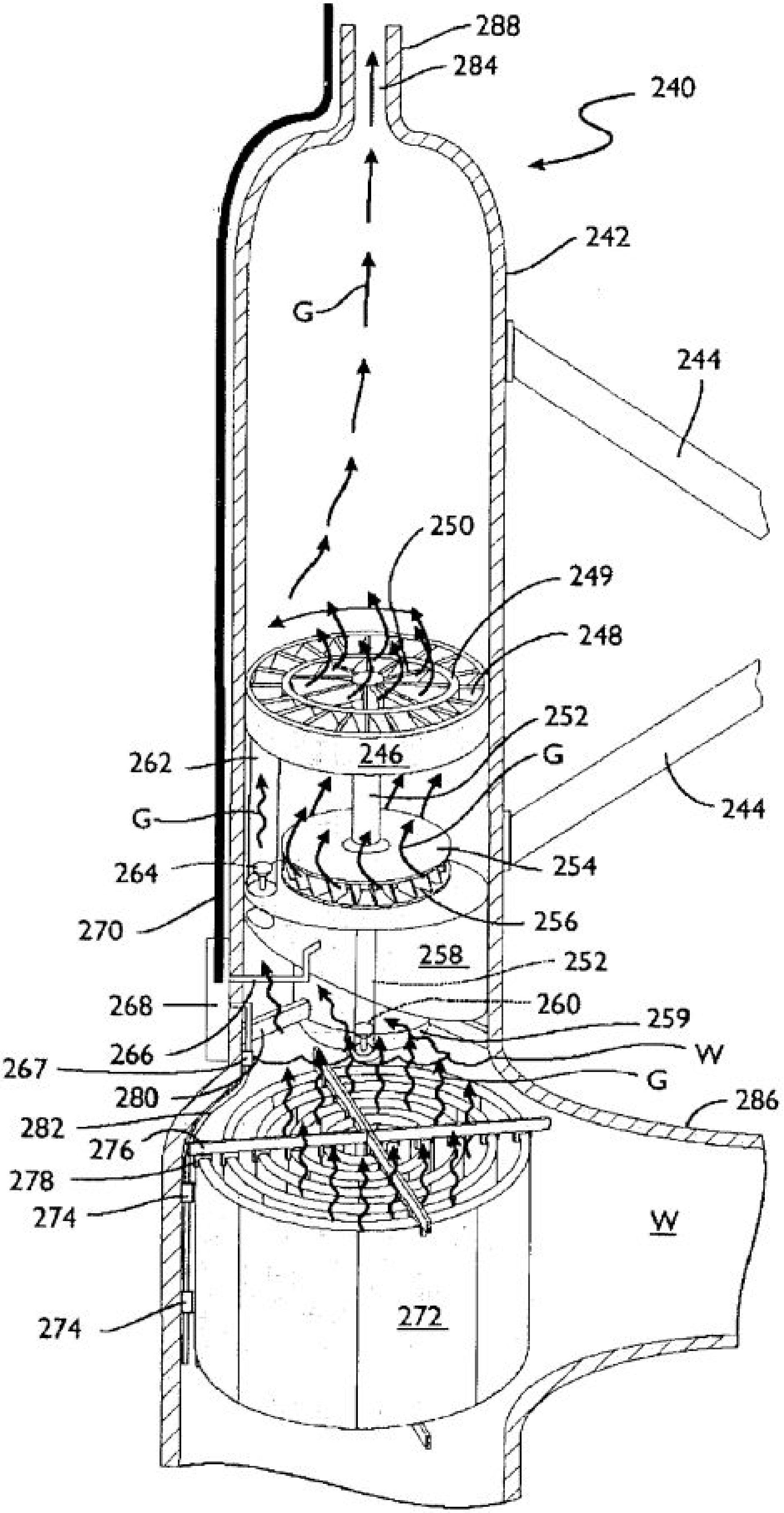
288
284
240
242
G
244
250
249
248
252
246
262
G
244
G
264
254
270
256
258
252
268
260
259
266
W
267
G
280
286
282
276
278
274
W
272
274

Inventor: Stephen Horvath. Patent № 3954592 "Electrolysis apparatus" – 1976. Similar to his Patent № 4107008 — 1978

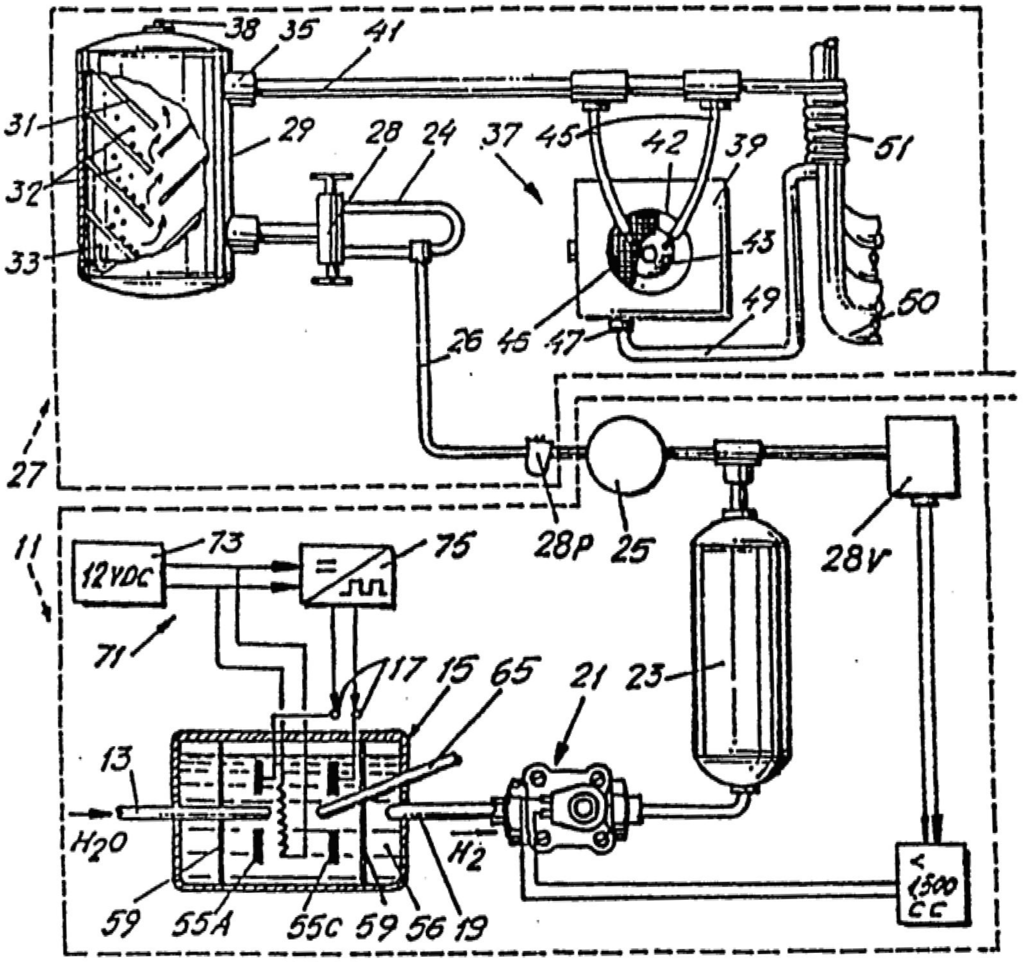

Fig. 1

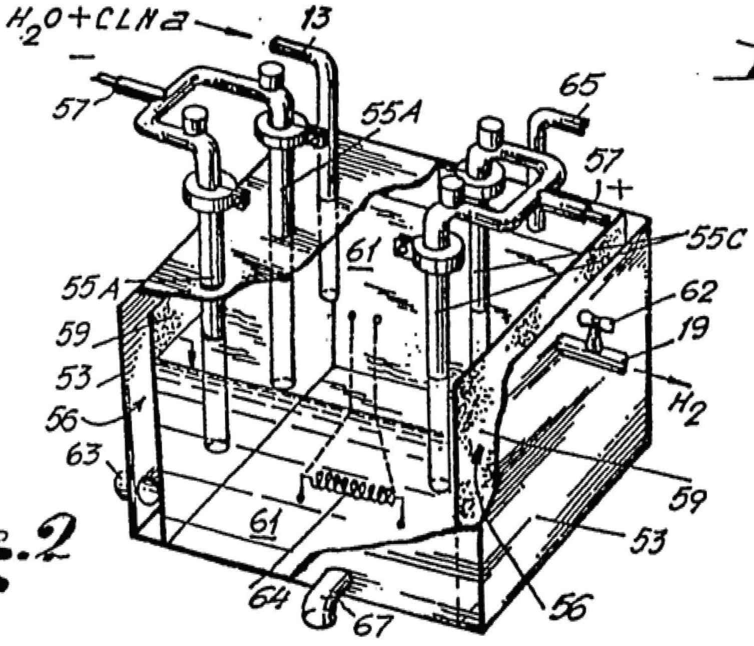

Fig. 2

Quote: According to the invention, hydrogen is obtained on board from a readily available hydrogenous source such as ionized water which is subjected to electrolysis, from whence the hydrogen is injected in each cylinder of the engine on the admission stroke. ***The hydrogen gas is mixed with water-vapor*** (steam at atmospheric temperature) and surrounding air, and when this mixture is ignited within the combustion chamber, the steam (vapor) ***seems to act as a temperature moderator first and then assist in the expansion stroke***. Preferably, the steam is dry saturated steam which, as a moderator, limits the maximum temperature of the combustion, thus helping to preserve the cylinder, valve and piston elements; and in assisting the expansion, the steam expands fast to contribute extra pressure on the piston head, increasing the mechanical output power of the engine.

In other words, the inclusion of steam in the hydrogen propellant as suggested by the present invention moderates the negative effects of hydrogen and enhances the positive effects thereof in the combustion cycle.

As a result of this discovery, the amount of hydrogen required to drive the engine is lower than was heretofore expected, hence the electrolysis need not produce more than 10 cc/sec (for example, for a 1,400 cc engine). Thus the amount of electricity required for the electrolysis, a stumbling block in earlier attempts, is lower, so much so that ***hydrogen production on-board is now feasible***.

The apparatus was ***tested and worked surprisingly well.*** It was discovered that this seemed to be the result of the steam content in the electrolytic hydrogen gas overcoming the pitfalls encountered in the prior art systems which injected relatively dry gas into the cylinder chambers, or at the most with a relatively small proportion of humidity coming from the air itself.

Hungarian migrant Stephen Horvath introduces his Waterfuel car to Queensland's Premier Sir Johannes "Joh" Bjelke-Petersen at Brisbane's City Plaza on July 14, 1980

Image: *http://www.couriermail.com.au/*

Inventor: Archie H. Blue. Patent № 4124463 "Electrolytic cell" – 1978.

In the electrolytic production of hydrogen and oxygen, air is pumped through the cell while the electrolysis is in progress so as to obtain a mixture of air with the electrolytically produced hydrogen and oxygen.

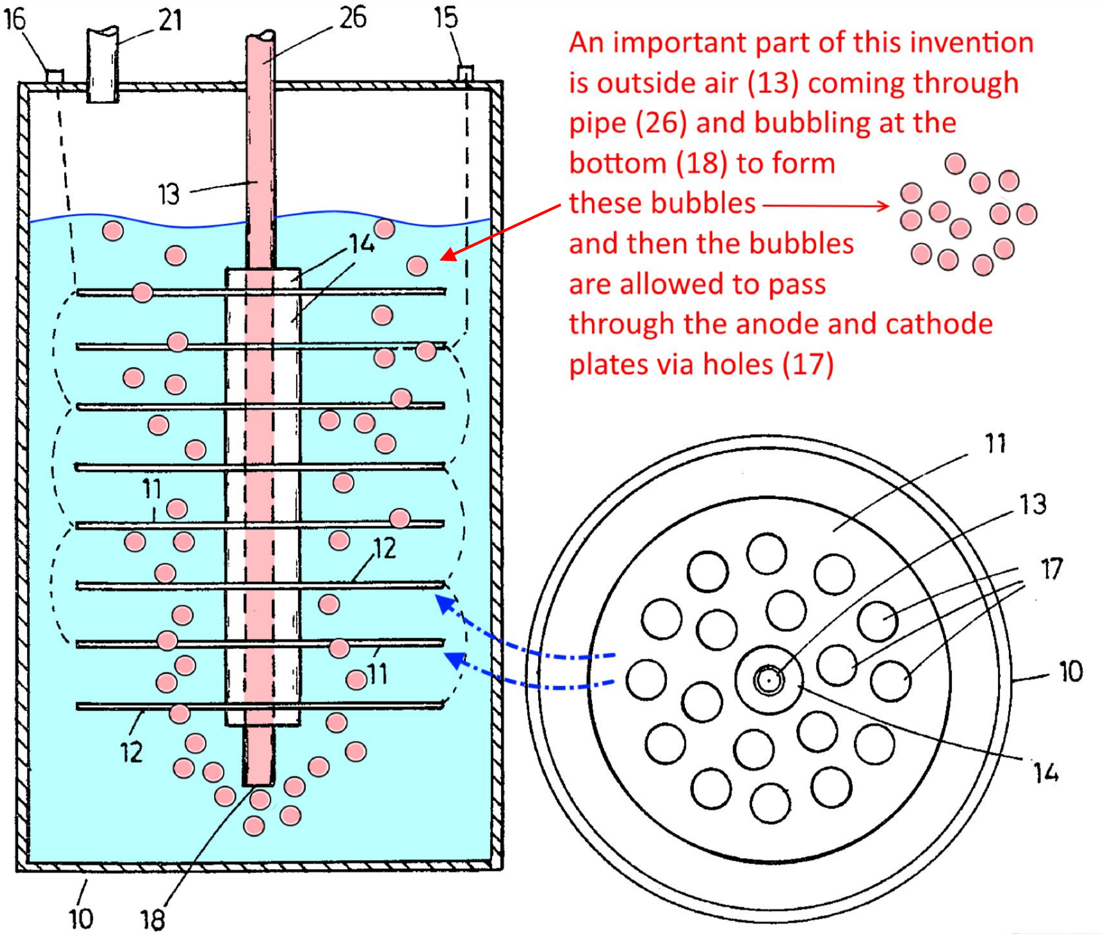

An important part of this invention is outside air (13) coming through pipe (26) and bubbling at the bottom (18) to form these bubbles → and then the bubbles are allowed to pass through the anode and cathode plates via holes (17)

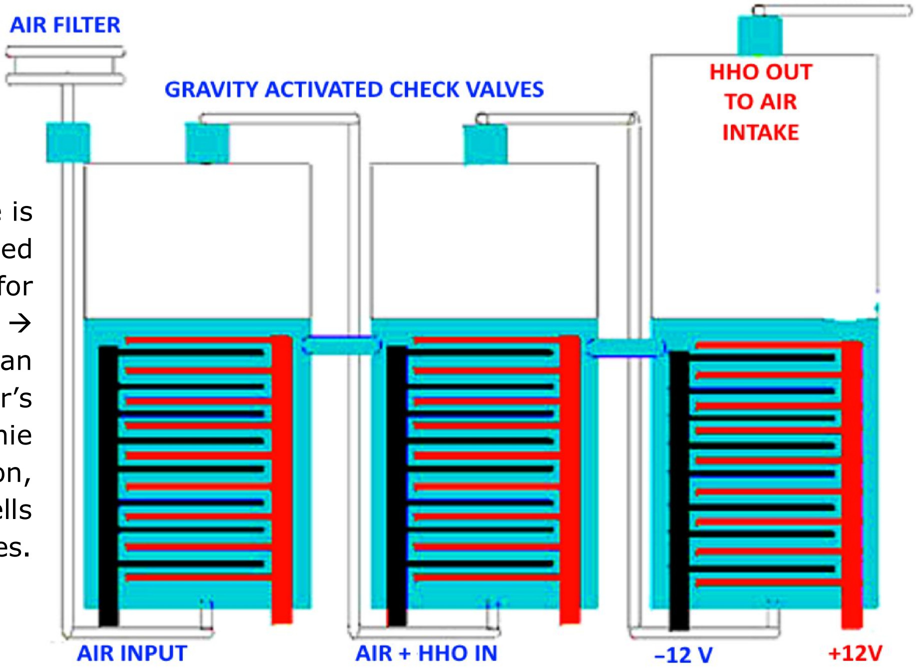

The diagram above is from the Patent (I added colors and bubbles for clarity) while this → diagram is of an experimenter's embodiment of Archie Blue's invention, showing several cells in series.

Inventor: Nehemia Davidson. Patents № 7615138 B2 and № 7611618 B2. "Electrolysis apparatus with pulsed, dual voltage, multi-composition electrode assembly" – 2009.

An electrolysis system --- an electrolysis tank (101) and a membrane (105) separating the tank into two regions, the system includes at least one pair of low voltage electrodes (115/117) --- at least one pair of low voltage electrodes (117/118) --- and at least one pair of high voltage electrodes (121/122). The low voltage applied to the low voltage electrodes and the high voltage applied to the high voltage electrodes is pulsed with the pulses occurring simultaneously with the same pulse duration.

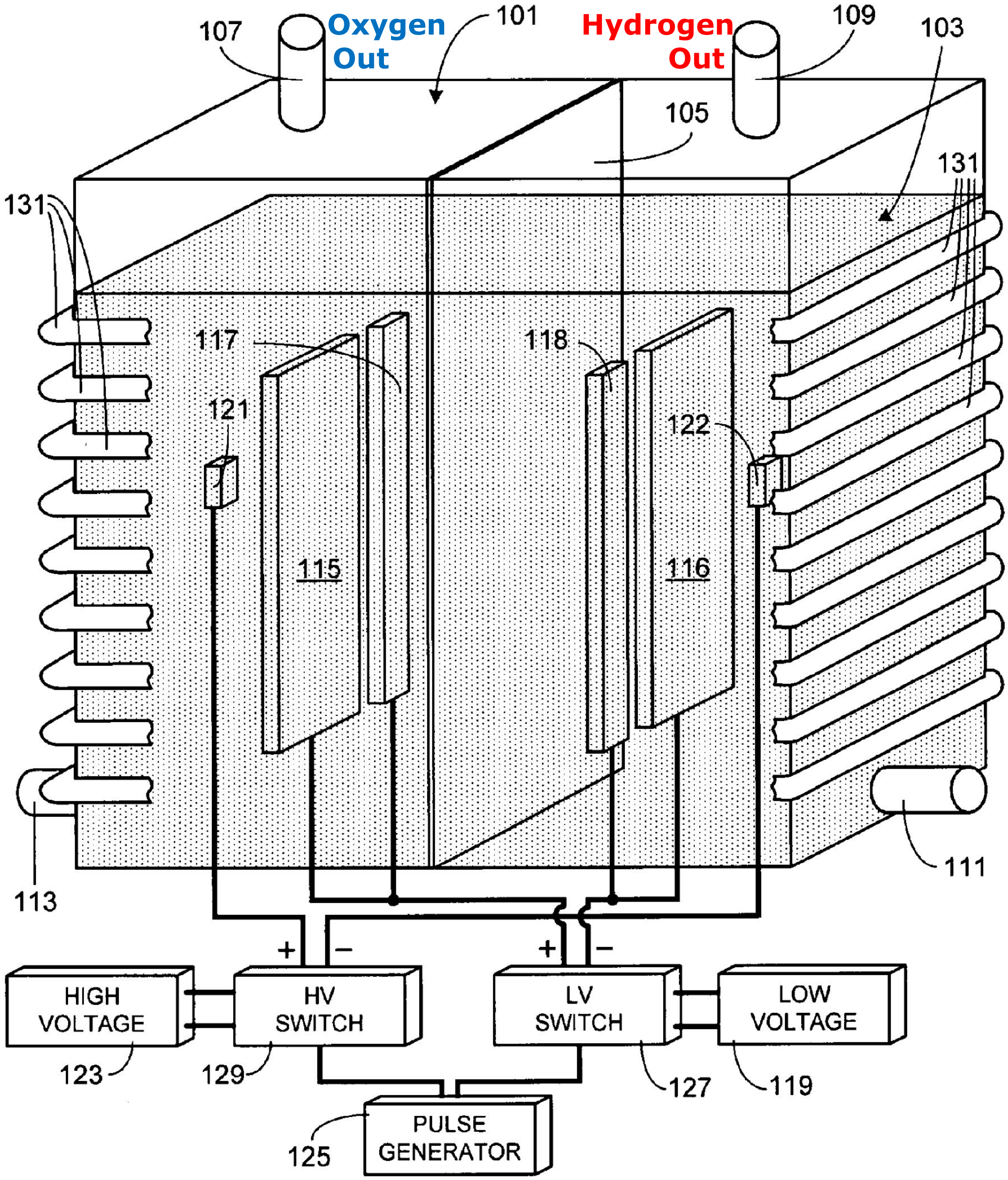

Inventor: Tasos Aggelopoulos (Hawaii). Patent № 8864964 "Electrolyzed hydrogen gas enhancement of hydrocarbon fuel combustion" – 2014. World Patent Application № WO2013036266A1.

ABSTRACT: A system employs a closed electrolyzer vessel into which water is circulated, and an electrode plate assembly is immersed to dissociate water into hydrogen and oxygen gases. Only water is used as the electrolyte fluid. An air injector in the water return line injects air bubbling for enhanced dissociation of water. The electrode plate assembly is formed by one or more unit stacks of 7-plates each, including two outer cathode plates, a middle anode plate, and spaced inner plates. The generated gases are maintained in a stable condition by an ***electromagnetic coil assembly*** that separates the hydrogen gas from oxygen gas.

QUOTE: "The system can obtain 180% reduction in fuel usage ***{Notice any STRANGE MATH, Mr. Patent Examiner?}*** in a vehicle engine, and 20 times reduction in carbon exhaust. It can obtain a 500% increase in fuel efficiency in an electrical power generator." *{Comment by Ozzie}*

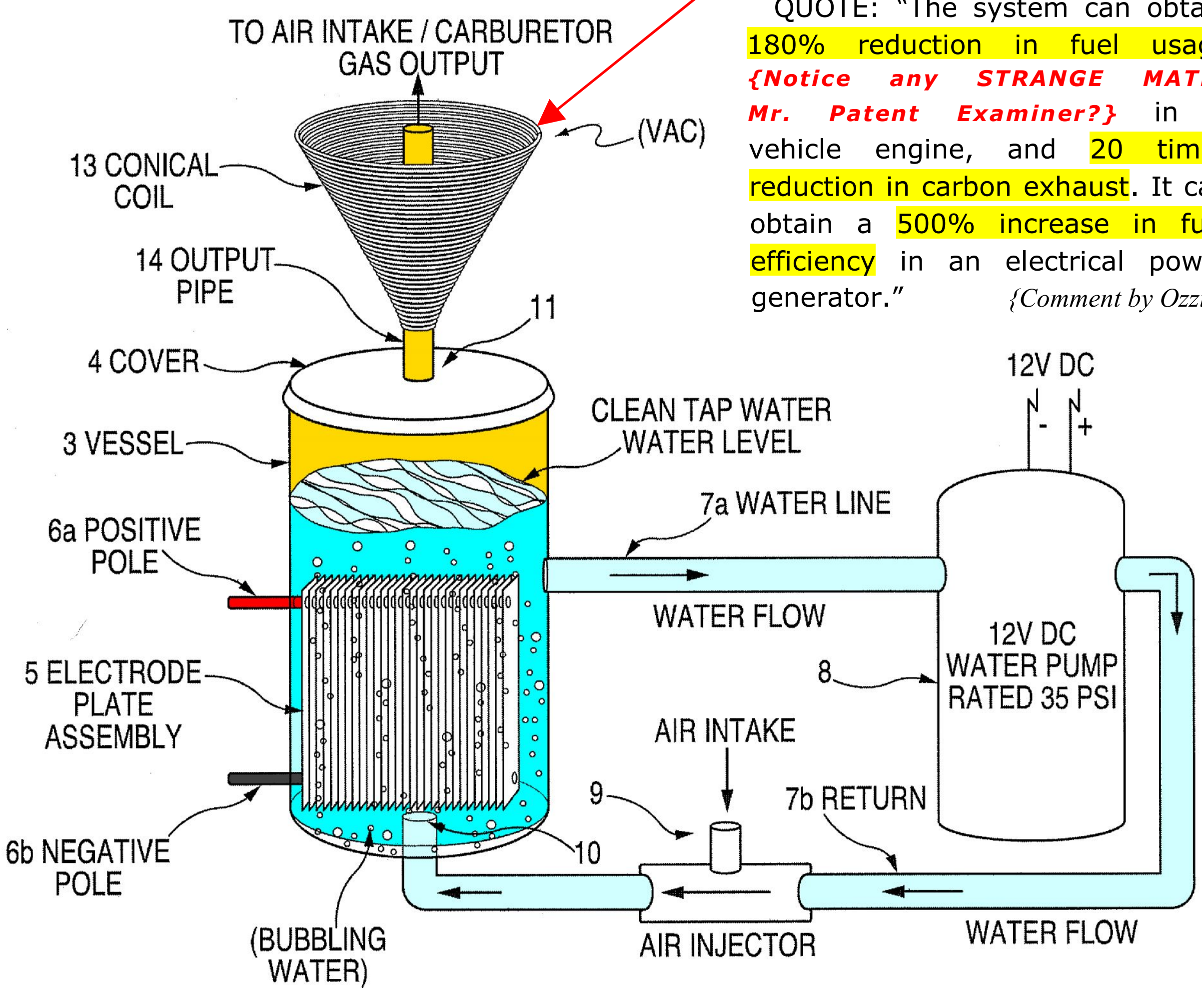

It is claimed that AC voltage, fluctuating 600÷700 Hz, is applied to the coil and causes the positive-valence hydrogen to separate from the negative-valence oxygen IN THE OUTPUT PIPE. Gases remain in stable condition WITHOUT RECOMBINING IN TRANSIT. Can't wait to try it! ~Ozzie

ON SIMILARITIES vs. DIFFERENCES

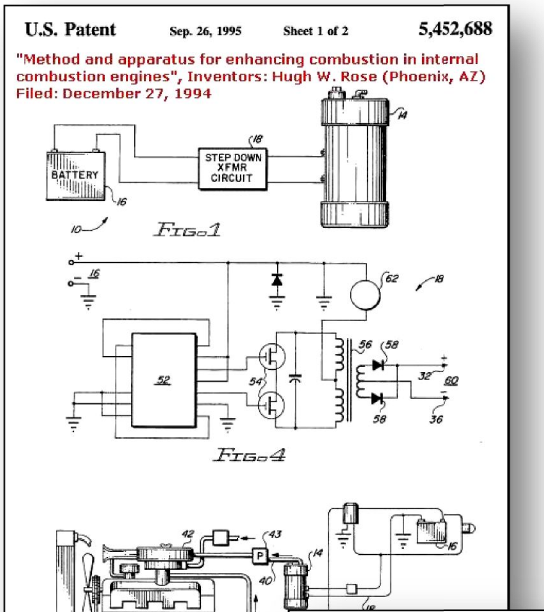

U.S. Patent Sep. 26, 1995 Sheet 1 of 2 5,452,688

"Method and apparatus for enhancing combustion in internal combustion engines", Inventors: Hugh W. Rose (Phoenix, AZ) Filed: December 27, 1994

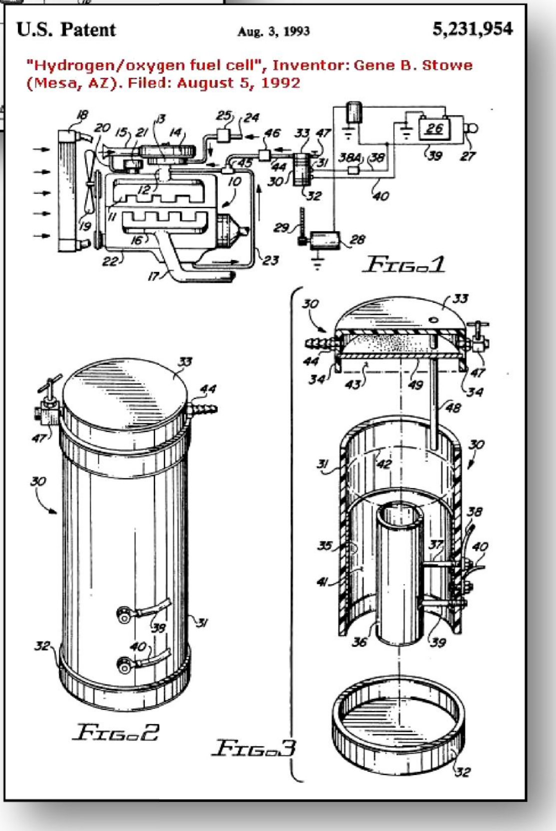

U.S. Patent Aug. 3, 1993 5,231,954

"Hydrogen/oxygen fuel cell", Inventor: Gene B. Stowe (Mesa, AZ). Filed: August 5, 1992

Some Patents are visually similar →

Australian Patent AU-2005100722-A4 — granted in 2005 by the Australian Patent Office to Robert Michael Roberts and Chau Kin Nam. In part, it looks similar (my interpretation) to devices suggested by Stanley Meyer, Professor P.M. Kanarev and others. US Patent № 6,048,500, from Apr. 11, 2000 "METHOD AND APPARATUS FOR USING HYDROXYL TO REDUCE POLLUTANTS IN THE EXHAUST GASES FROM THE COMBUSTION OF A FUEL." In this patent hydrogen is separated from oxygen, and both are fed into the engine. US Patent № 5,452,688 (sample shown below) from 1995 describes a "HYDROXYL GENERATOR" feeding the carburetor of an internal combustion engine for similar purposes: *"This invention relates to the use of electrolytic cells which generate a gaseous mixture of hydrogen and oxygen to enhance the efficient burning of hydrocarbon fuels in internal combustion engines..."* In 1999, US Patent № 5,863,413 describes yet another "HYDROXYL GENERATOR" feeding the intake manifold of an internal combustion engine for similar purposes.

One Goal – Many Ways to Get There!

As you can see here, many Patents describe the very same goals: ***BETTER ECONOMY, BETTER ECOLOGY*** – and the multiplicity of ways to achieve this same goal. One last example from 1993, US Patent № 5,231,954 (shown) "HYDROGEN/OXYGEN FUEL CELL" depicts a pretty simple Electrolyzer and it states: *"Use of the generated gases as a fuel supplement enables substantial increases in fuel efficiency, while at the same time reducing the emission of pollutants."*

Hydrogen Fuel Methods

Inventor: Stephen Horvath. Patent № 3954592 "Electrolysis apparatus" – 1976. Similar to his Patent № 4107008 — 1978

A novel electrolytic cell performs an electrolysis process at improved efficiencies by supplying a pulsed DC current to the electrodes thereof. In preferred embodiment a generally cylindrical anode, with a fluted outer surface, is surrounded by a segmented cathode having an active area equal to the active area of the anode. An electrolyte, which may be a 25 percent solution of potassium hydroxide is introduced into the cell for production of hydrogen and oxygen at the cathode and anode respectively. The current for carrying on the electrolysis process is provided by a transformer, which is preferably located within an oil filled chamber inside the anode. Heat from this transformer and a magnetic field also created thereby both have a beneficial effect upon the reaction rates.

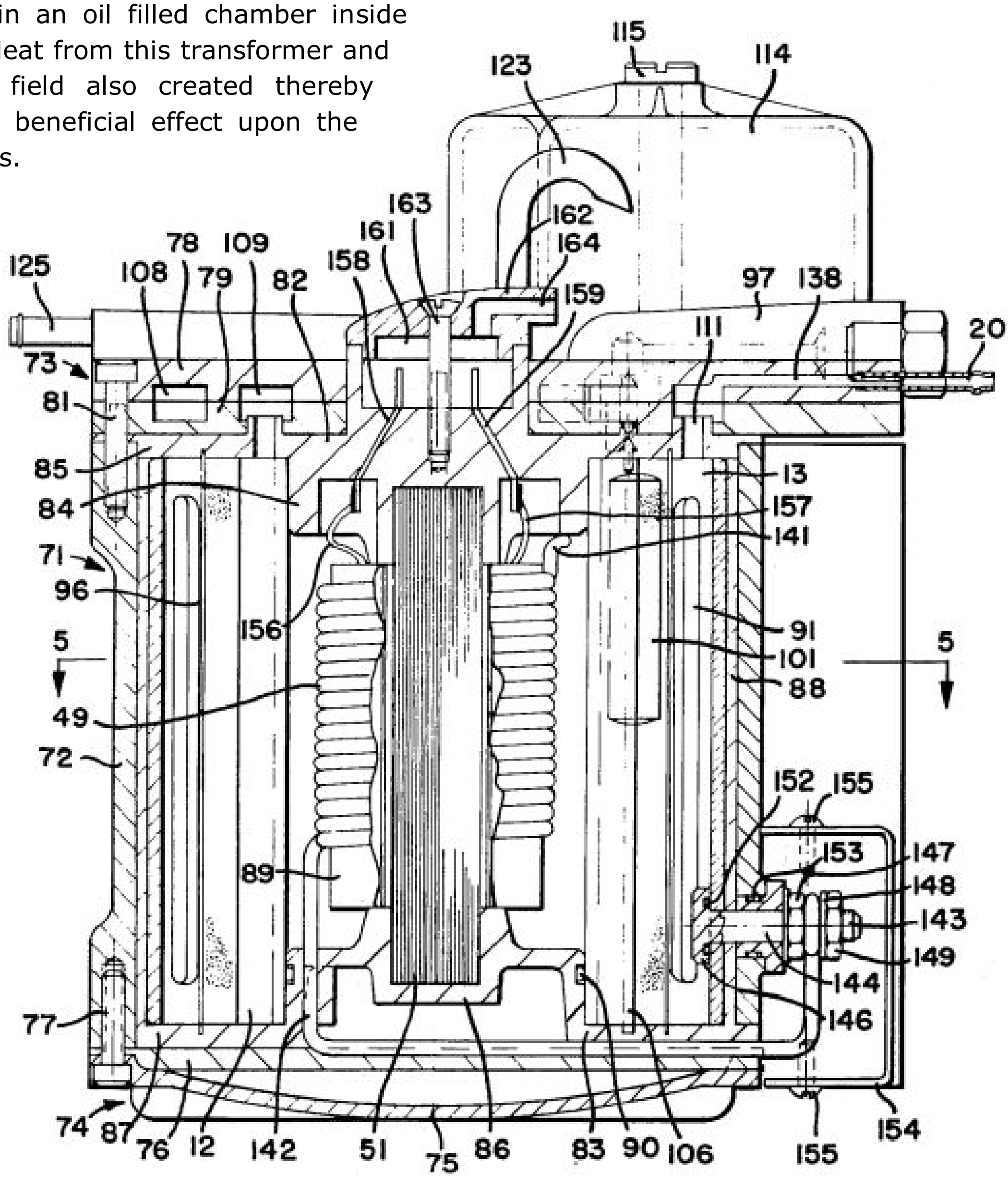

The pulsing of the electrode current may in one embodiment be carried out at a rate of between 5,000 and 40,000 pulses per minute, with a rate of about 10,000 pulses per minute being preferred. In such an arrangement the current level may be about 220 amps at a duty cycle of about 0.006 and the electrode voltage may be about 3 volts. Thus there are produced very short, sharp pulses, which have been found to be very effective in the production of reaction products. Appropriate circuitry is disclosed for providing a driving signal to the transformer, as well as an arrangement for safely taking off the reaction products and stopping the process upon sensing of a predetermined internal pressure.

Inventors: John Murray; Robert Hynek. Patent № 3969481
"Process for generating ultra high purity H_2 or O_2" – 1976

A purification system for producing extremely pure H_2 from H_2 gas streams containing water and small amounts of O_2 comprises a single column with alternating layers of adsorbent and a catalyst for the reaction $2H_2 + O_2 \rightarrow 2H_2O$. The alternating layers are arranged so that the gas to be purified first meets an adsorbent layer, next a catalyst layer and finally an adsorbent layer. Two such columns can be operated alternatively, one being used to produce purified gas, while the other is backflushed with as little as 2% of the product gas of the operating column. By this technique, H_2 gas can be produced having a purity as high as 99.9999% or higher. The inventive system can also be used to purify O_2 gas streams containing water and small amounts of hydrogen.

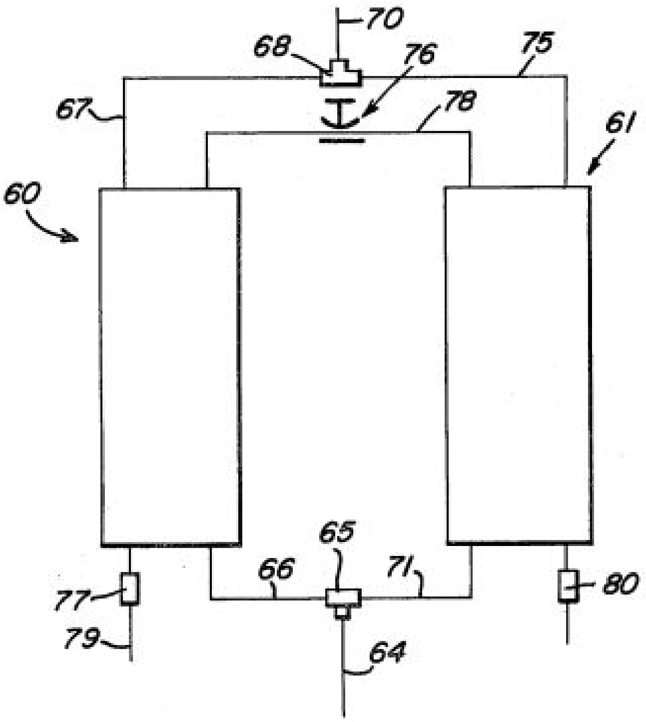

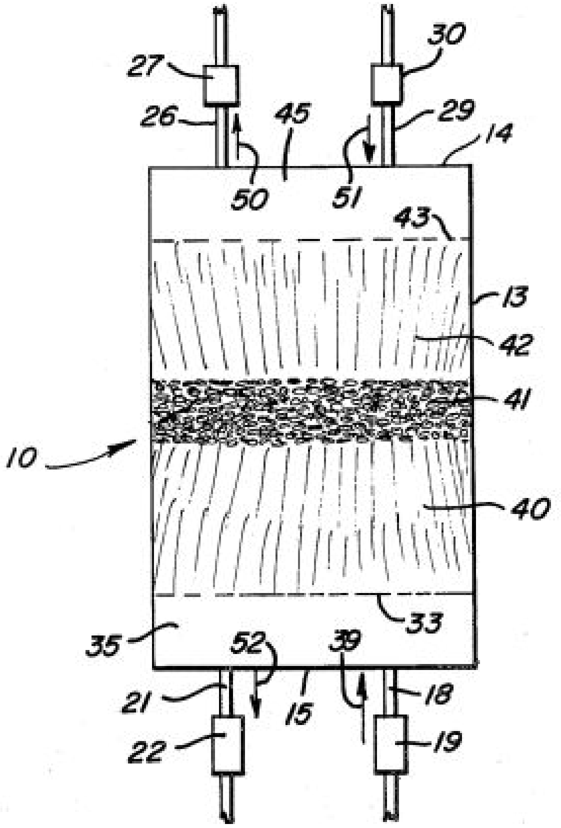

Inventor: Ronald Papineau. Patent № 3967589

"Energy generating system" – 1976

Energy system in which steam is generated by combustion of hydrogen in ozone enriched air. The steam so generated is supplied to an asymmetric microporous membrane, which causes chemical disassociation of the steam to yield hydrogen and oxygen. The hydrogen gas is used to maintain combustion in a closed power generating system.

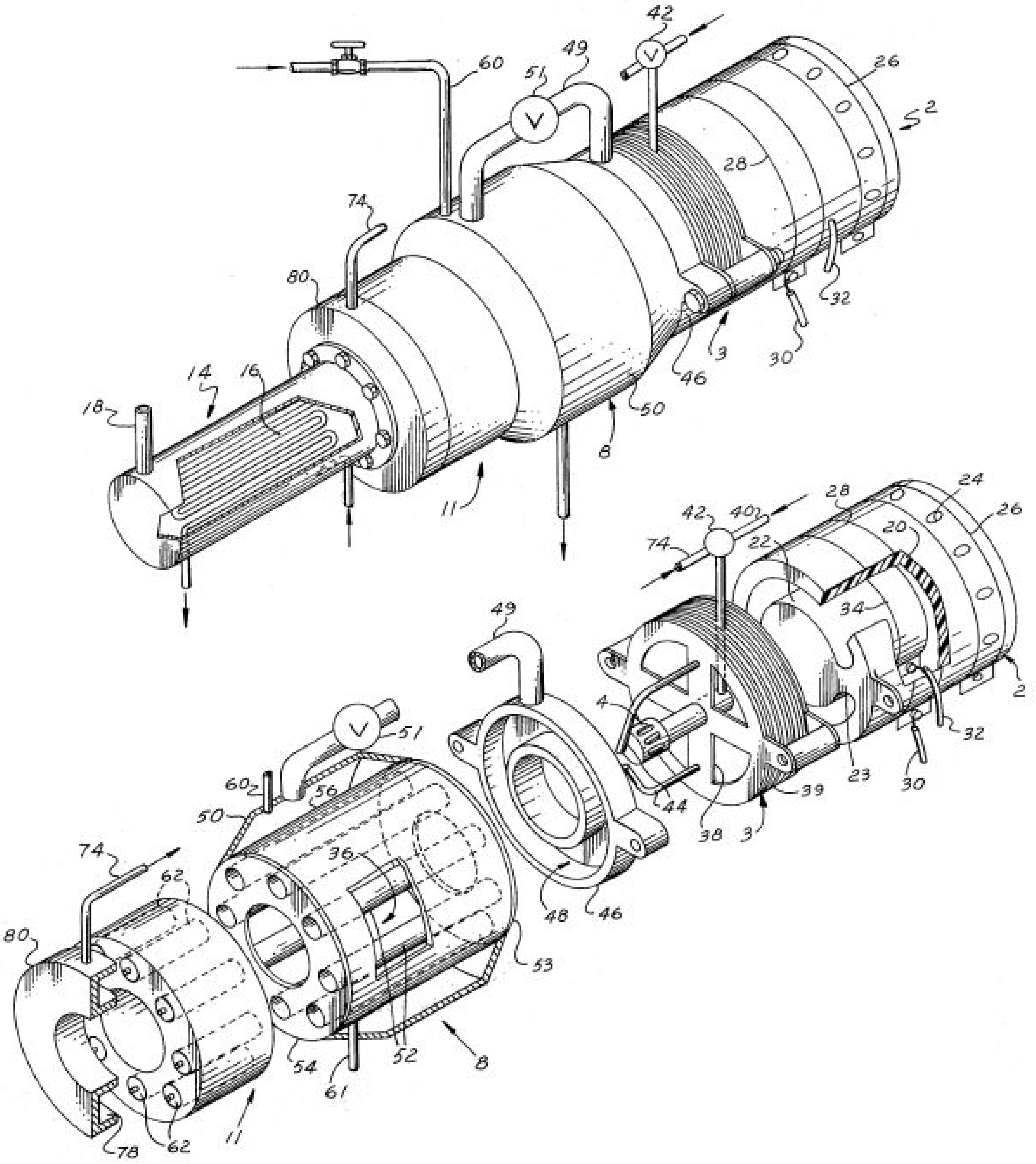

Inventor: Howard Brown. Patent № 4080271
"Solar Powered Hydrogen/Oxygen Gas Generation" – 1978

This invention relates to the utilization of solar energy by means of a reflector, a boiler and a turbogenerator whereby solar heat is concentrated and electric power is produced, utilization of the exhaust heat from the power cycle in the distillation of sea water, and utilization of the electric power in a plurality of electrolytic cells whereby hydrogen and oxygen are extracted from the distilled water and hydrogen and chlorine are extracted from the sea water.

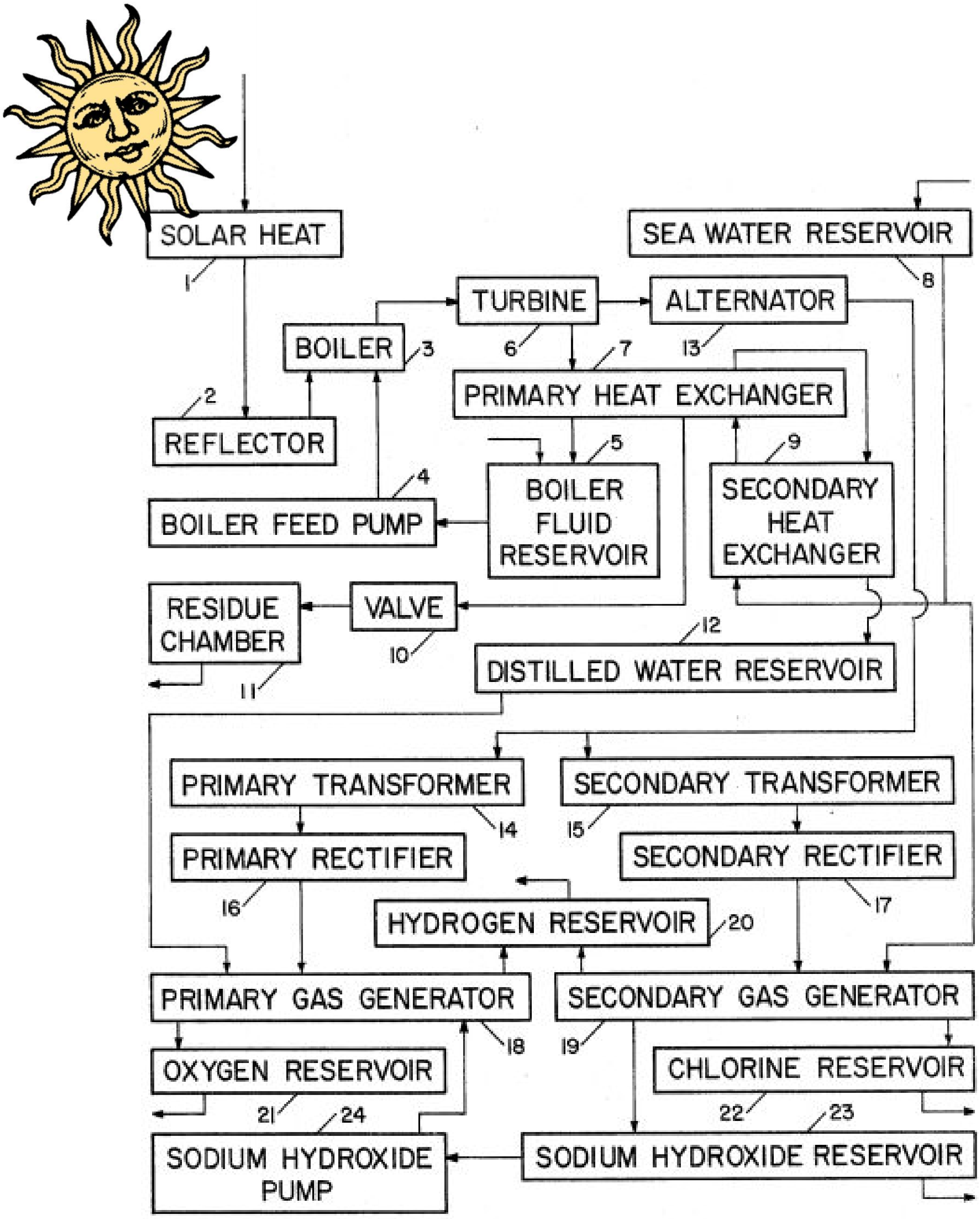

Inventor: Robert Scragg. Patent № 3988205
"Solar Reactor Steam Generator Method and Apparatus" – 1976

The significance explained by Burch B. Stewart, Ph. D.

(1) Virtually unlimited energy can be obtained by proper utilization of the process. Since hydrogen and chlorine are readily available from sea water, there is no shortage of fuel and oxidant.

(2) Since the product of the explosion is primarily hydrochloric acid, the hydrogen and chlorine needed for the second cycle can be obtained from the product, using known or improved electrolysis technology. In other words, the fuel can be recycled.

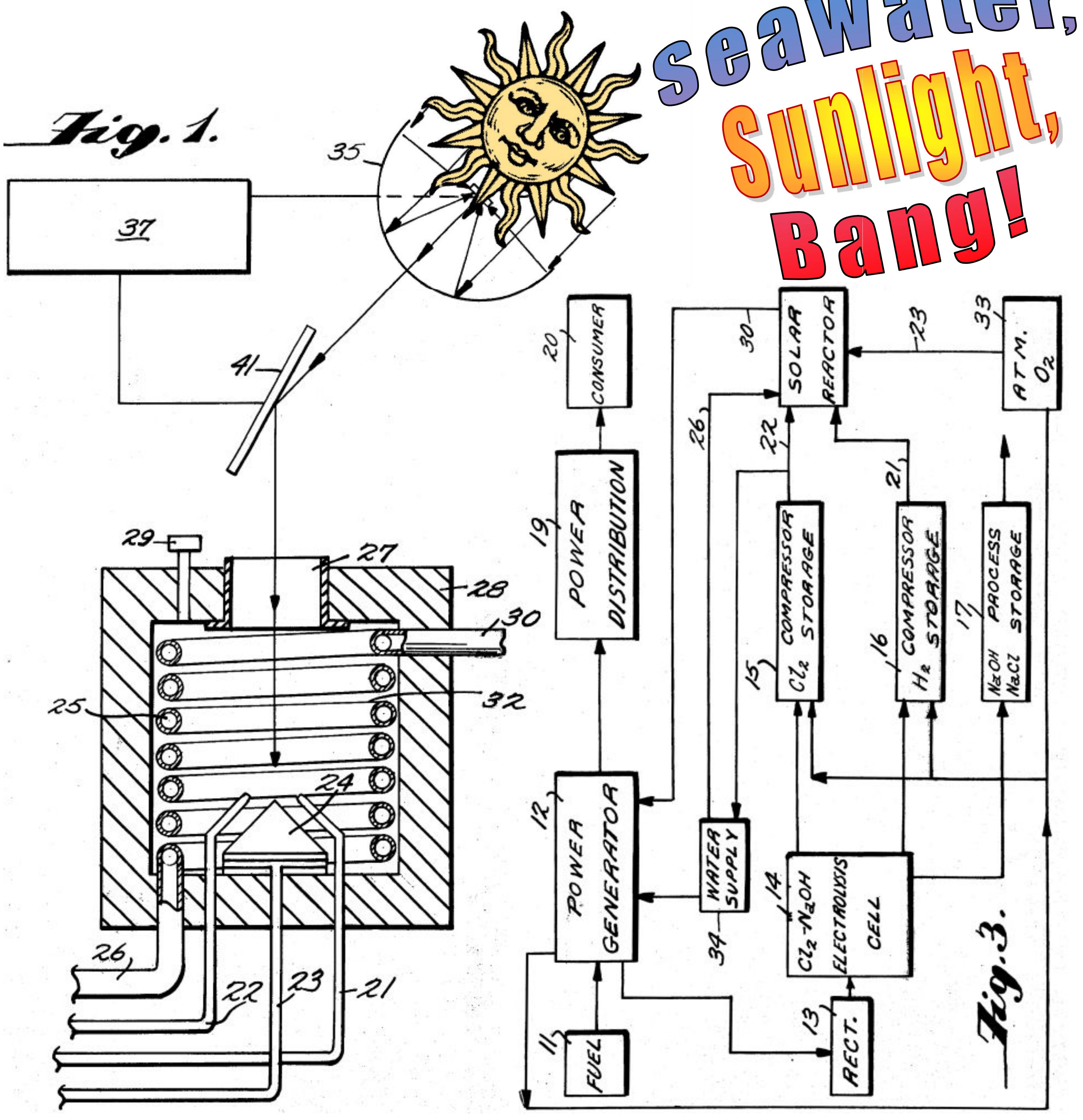

Excerpt from the Patent's description:

Low voltage high current generator, such as, for example, a homopolar generator, could be appropriately driven by a steam turbine to provide current to the electrolysis cell 14. The desired voltage, i.e., 3.6-3.75 volts at the desired current level, depending on the size of the cell 14, is fed to the chlorine-sodium hydroxide electrolysis cell 14. At the same time saline water, or brine, is pumped into the cell. Electrolysis then takes place and chlorine is formed at the cell anode while hydrogen is released at the cell cathode, leaving a 10-15% sodium hydroxide solution and a 10-15% sodium chloride solution in the cell liquor.

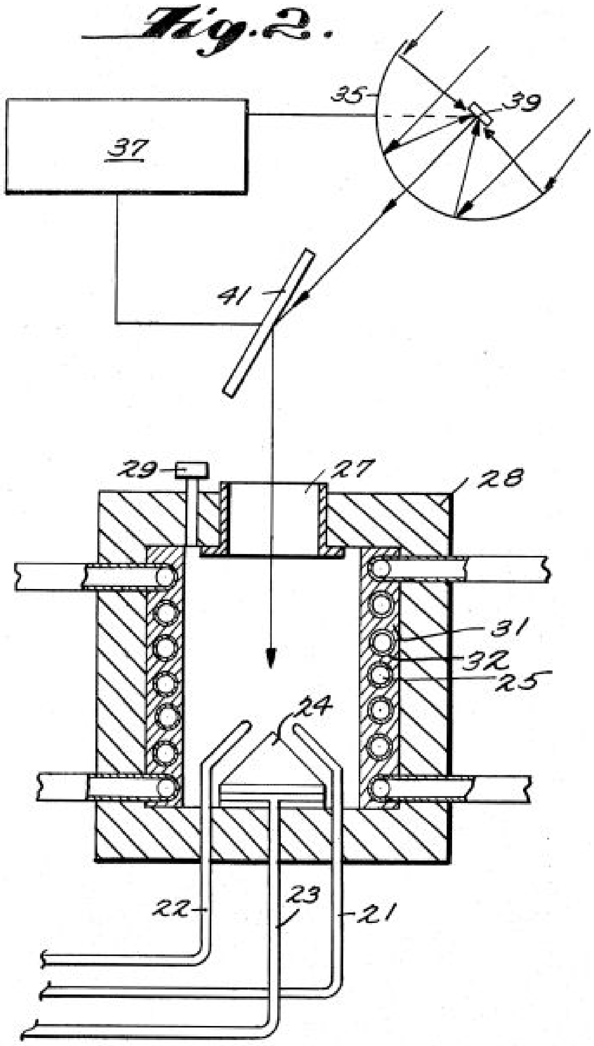
Fig. 2.

Accordingly, 70 to 80% of the saline water is converted to hydrogen and chlorine. The chlorine is compressed into storage tank 15. The hydrogen is compressed into storage tank 16. The hydrogen and chlorine are then fed to the solar reactor 32 at a controlled rate by suitable means known in the art. The sodium hydroxide and sodium chloride are fed into process storage tank 17, then used in other processes as desired. The hydrogen is fed into the solar reactor chamber 32 via tube 21.

The chlorine is fed into the solar reactor chamber 32 via tube 22. Atmospheric oxygen is fed into the solar reactor chamber 32 from storage tank 33 via tube 23. Water is fed from chlorine treated water storage tank 34 via tube 26 into the heat exchanger tubes 25. Intensified solar rays are directed through sight glass 27, illustrated in FIGS. 1 and 2, into the reactor chamber 32 onto the conical reflector 24 which disperses the solar rays onto the surface of the exchanger tubes 25. The solar rays bring about a reaction of controlled explosive violence between the hydrogen and chlorine, emitting conductive, convective, compressive, and infrared heat. The heat is absorbed by the exchanger tubes 25, vaporizing the water and discharging steam via tube 30 which is then fed to power generator 12 to drive power turbines. Pressure relief valve 29 provides a means for releasing excessive pressures that build up in the reactor chamber 32. The hydrogen chloride exhausted by valve 29 is channeled to an appropriate mechanism for converting the hydrogen chloride to acid or other appropriate compounds as desired.

Inventor: Ernst Spirig. Patent № 4113601
“Water decomposing apparatus” – 1978

A water decomposition apparatus for producing detonating gas or oxyhydrogen gas comprises a plurality of electrolytic cells formed between a nested plurality of endless laminar electrodes each sealingly abutting at its upper and lower edges against elastomeric insulating layers on the surfaces of rigid plates. Electrolyte circulation through the assembly is permitted by an inlet aperture in one extreme cell, an outlet aperture in the other extreme cell and an aperture in each intermediate electrode adjacent its upper edge. The inlet and outlet apertures are coupled for electrolyte circulation by immersing the assembly in electrolyte or by an extended duct system connecting the apertures. Current is supplied to the extreme inner and outer electrodes from a d.-c. [direct current] source. Control means may be provided to reduce the magnitude of the current as the gas pressure rises. A plurality of assemblies may be connected electrically in series across the d.-c. supply. When an electrode assembly is to be immersed in electrolyte its outermost electrode is surrounded by an electrically inoperative shielding member sealingly engaging the insulating members.

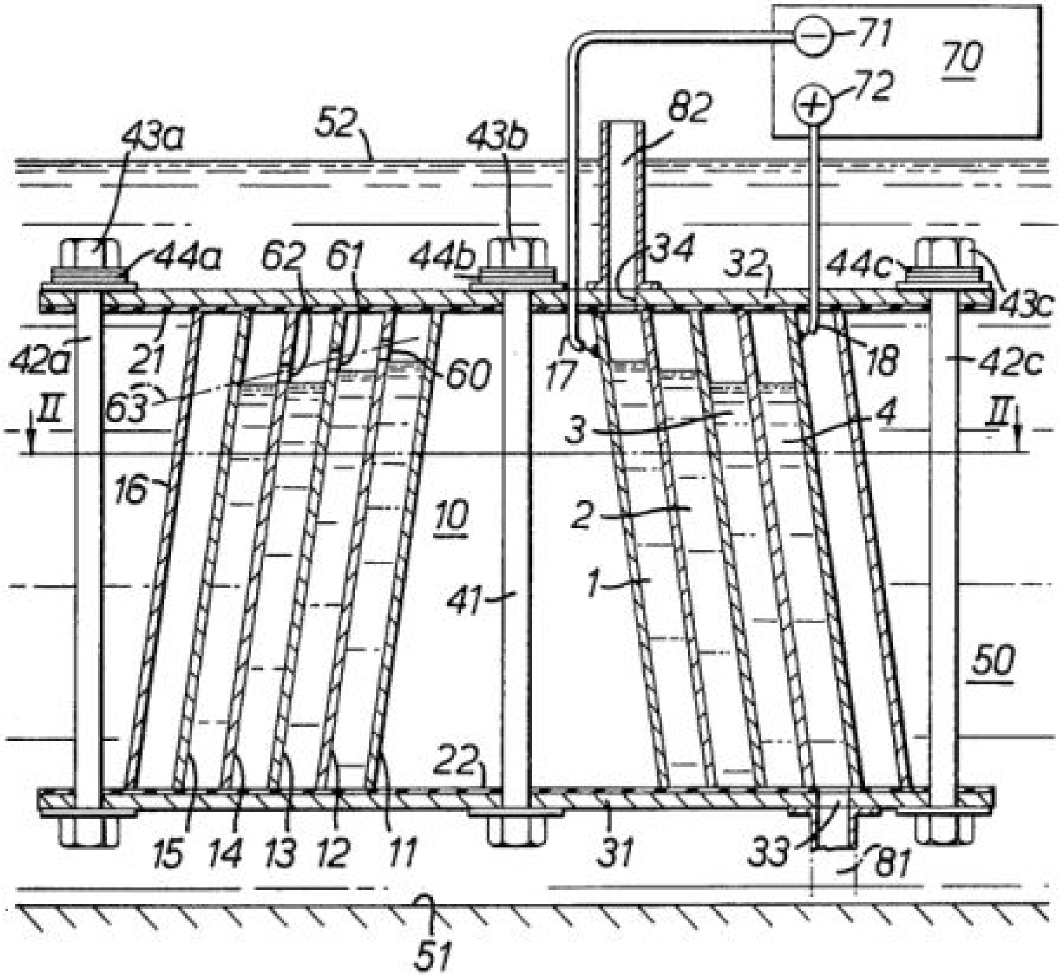

Inventor: Marlin Shaffer, Jr. Patent № 4161657 "Hydrogen supply and utility systems and components thereof" – 1979

An energy system that is responsive to and ***converts radiant energy into direct current electricity*** at a pair of output connectors which are maintained at a potential difference. The hydrogen and oxygen-generating electrodes of an electrolysis cell are coupled to such terminals so that hydrogen and oxygen may be produced, with at least the former being stored under pressure. Valve or regulator means is supplied the hydrogen storage system such that, preferably, a constant volumetric output over a given time span is maintained for producing a useful result such as a continuous source of electrical energy. The valve means is regulated so that the gas pressure within the storage system is always maintained above a predetermined threshold. Useful results are produced in the form of mechanical power, electrical power, the synthesizing of ammonia, and other important products and results. Where a hydrogen engine is employed in the system, then the vapor output is preferably fed back to t he electrolysis cells of the system so that the water needed in the cell is continuously replenished. The system is designed such that the radiant energy, though intermittent or irregular, will generate a regulated source of essentially uniform electrical or mechanical energy or other useful, continuous product or result, as desired.

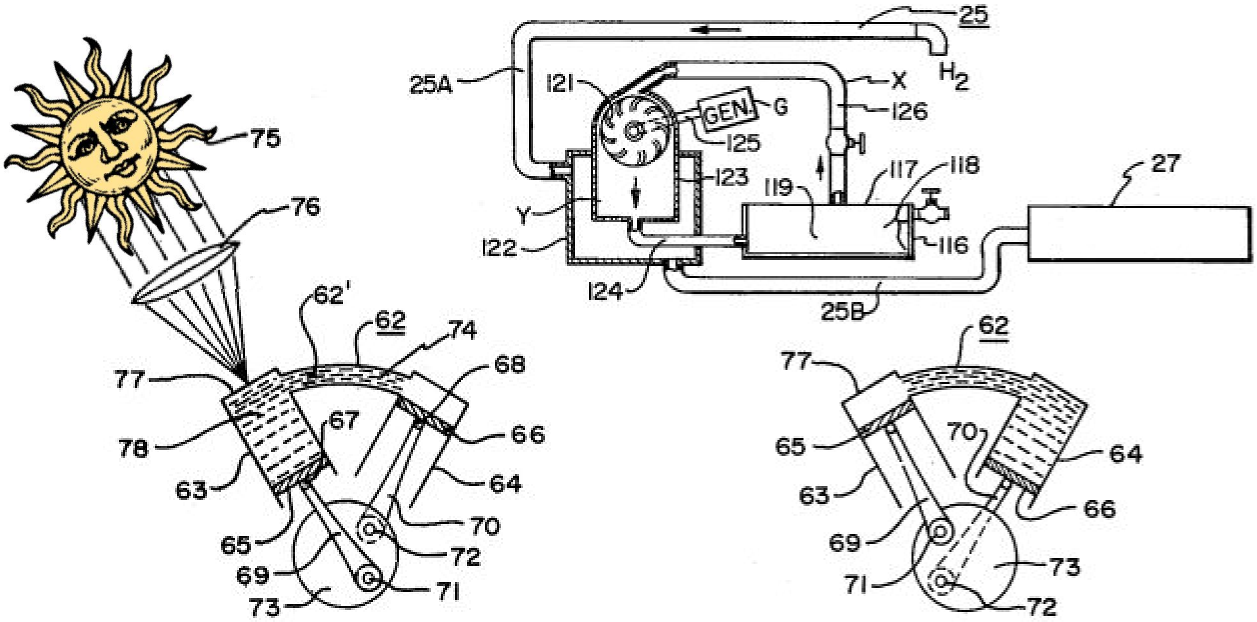

Inventor: Daniel Monahan. Patent № 4233127 "Process and apparatus for generating hydrogen and oxygen using solar energy" – 1980

This application relates to a method and apparatus for generating hydrogen and oxygen gas from water with solar energy. A solar reflector concentrates solar energy into a water-containing reaction chamber to raise the temperature to the dissociation temperature of water. Both the thermal and photolytic effects of the sun's rays are employed to dissociate water. The hydrogen and oxygen formed upon dissociation are drawn off and separated.

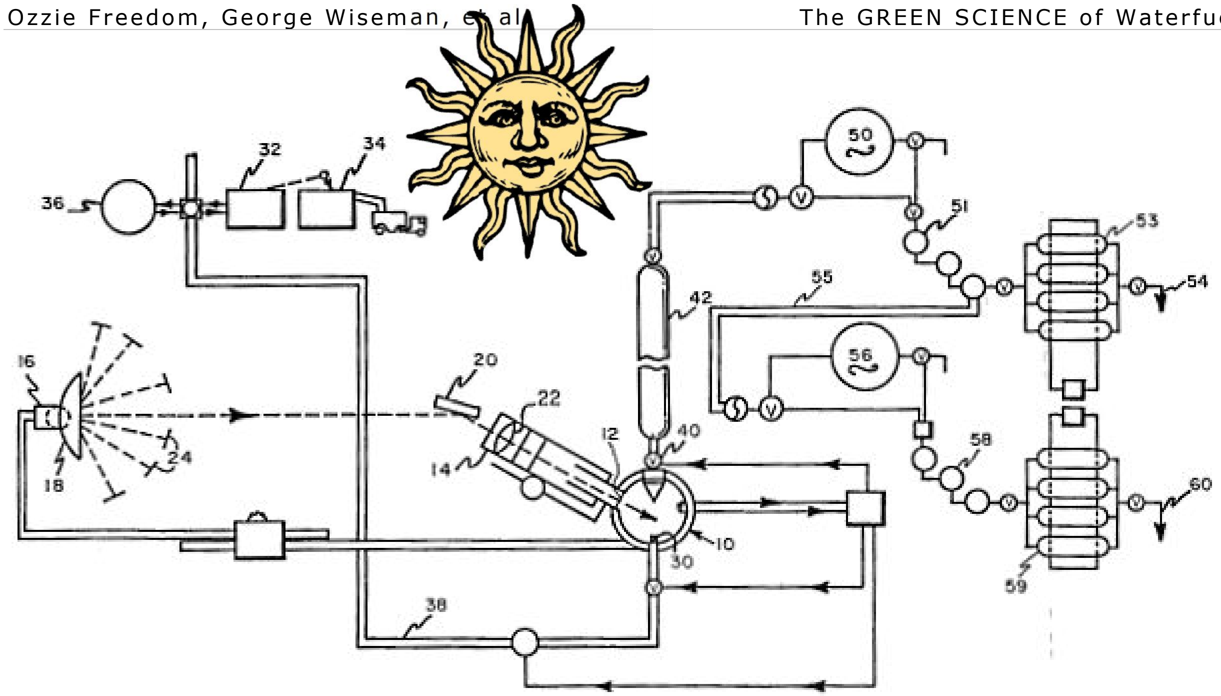

Inventor: Saul Hackmyer. Patent № 4265721
"Commercial hydrogen gas production by electrolysis of water while being subjected to microwave energy" – 1981

Water is electrolytically decomposed in a microwave-fed resonant cavity whereby electrolysis is so greatly enhanced as to make the commercial production of hydrogen and oxygen gasses a practicality.

> ***DETAILED DESCRIPTION***
>
> ***In accordance with the invention, microwave energy produced by a microwave generator will be fed to a resonant cavity of such size as will contain one or more electrolytic cells comprising a synthetic plastic material, glass or other non-energy absorbing containers holding the water to be electrolyzed. Microwave energy at*** *a frequency of 915 MHz* ***(allocated for industrial use by governmental authority) is considered to be particularly effective in my method. Suitable amounts of salt may be added to the water of the electrolyte to produce the conductive negative ions. Gas passage conduits surrounding the electrolytic poles with their lower ends immersed in the electrolyte, will collect the electrolytically released gasses for flow into respective gas collecting tanks. The gas so collected in the tanks may then be liquefied by compression for convenient commercial use. It will be understood that my method for the commercial production of hydrogen gas also results in the production in commercial quantities (approximately ½ the amount by volume) of oxygen gas.***

Therefore, *the hydrogen and oxygen gasses can be electrolytically produced in a portable microwave resonant chamber apparatus that can be installed in a vehicle for directly supplying hydrogen and oxygen for combustion in the combustion chambers of the vehicle engine.*

Inventor: Claude Chappelle. Patented № 4379043
"Water-decomposition and gas-generating apparatus" – 1983

An apparatus is provided for decomposing water and producing detonating gas by electrolysis. The apparatus includes a plurality of annular carbon electrodes, which are concentrically arranged about a common vertical axis. The annular electrodes are perforated and have upper and lower ends, the lower ends being positioned adjacent to sealing and insulating elements in order to form a plurality of concentrically-arranged cells for containing electrolyte, e.g., water. A solid carbon ← electrode, preferably cylindrical, is positioned within the smallest concentric electrode and along the common axis. Apparatus is provided for supplying water to the cells, and for applying a direct current across the electrodes in order to evolve the detonating gas from the electrolyte in the cells by electrolysis.

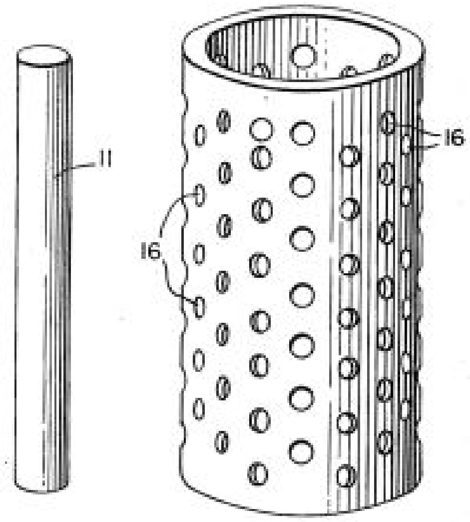

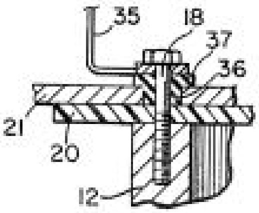

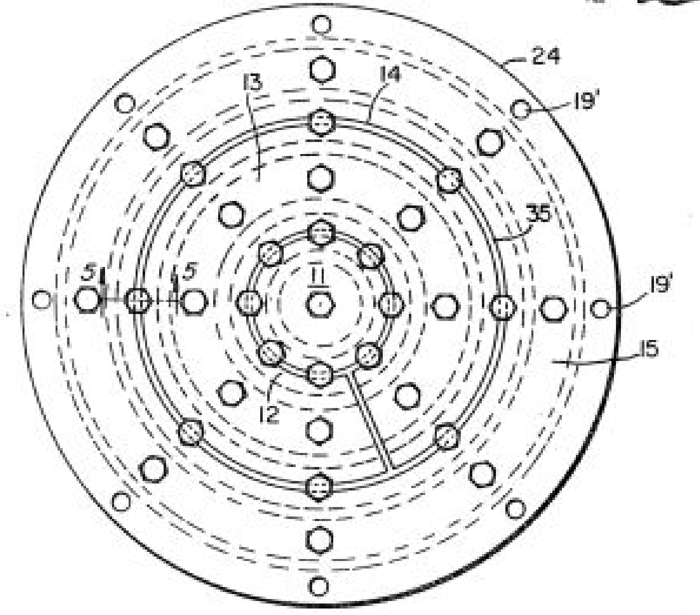

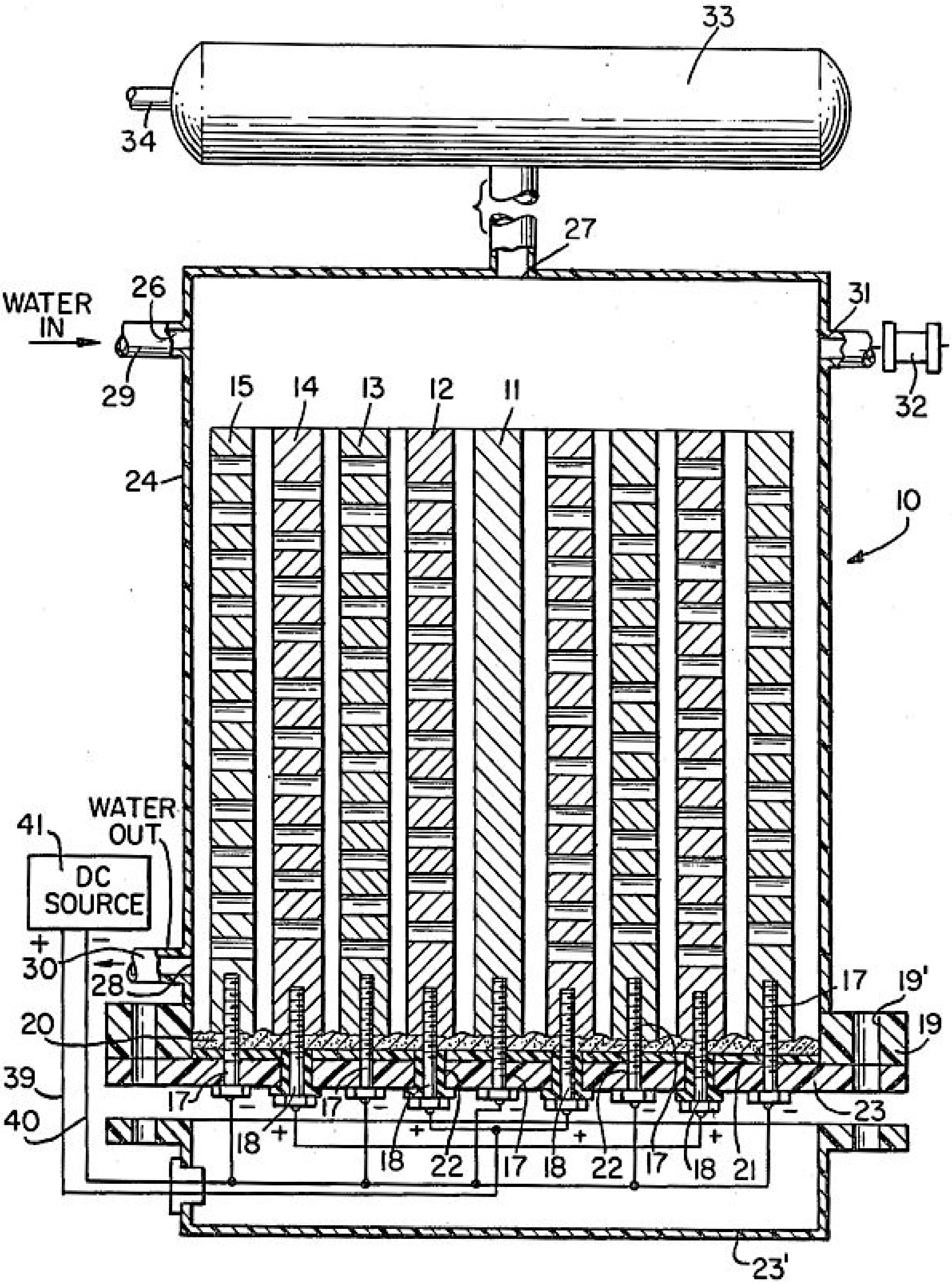
33
34
27
WATER IN
26
29
31
32
15
14
13
12
11
24
10
41
DC SOURCE
WATER OUT
+
−
30
28
20
39
40
17
18
22
21
23
23'
19
19'
+
−

Inventor: Charles Heller. Patent № 4419329 "Device for producing hydrogen and oxygen gases" – 1983

A device to disassociate combustion product compounds such as water into hydrogen and oxygen gases is provided, including a tube to pass steam through a layered P-N semi-conductor system by which excess electrons are added to the steam, heat is added to the steam, a sweeping magnetic field to accelerate the steam ions in a swirling motion to cause the steam mass to accumulate high velocity kinetic energy and a porous plug of a catalyst metal, such as platinum, splitting the steam ions into oxygen and hydrogen.

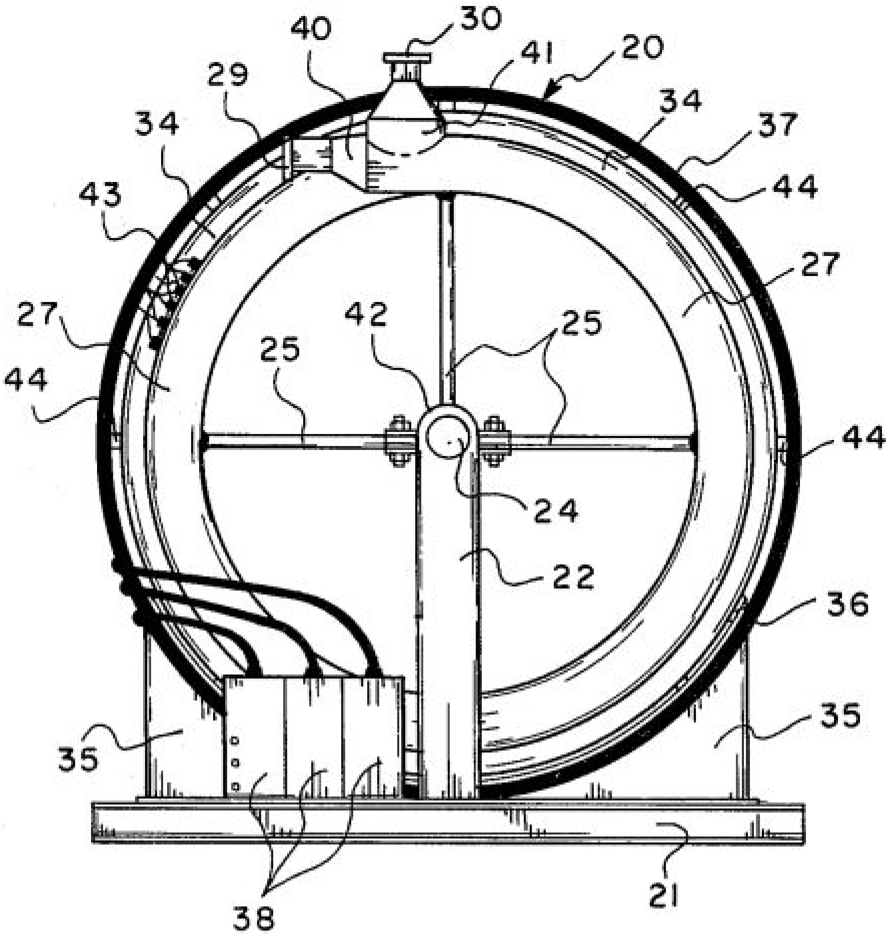

Inventor: Henry Puharich. Patent № 4394230 "Method and apparatus for splitting water molecules" – 1983 Complete Patent: Chapter 8.

Disclosed herein is a new and improved thermodynamic device to produce hydrogen gas and oxygen gas from ordinary water molecules or from seawater at normal temperatures and pressure. Also disclosed is a new and improved method for electrically treating water molecules to decompose them into hydrogen gas and oxygen gas at efficiency levels ranging between approximately 80-100%. The evolved hydrogen gas may be used as a fuel; and the evolved oxygen gas may be used as an oxidant.

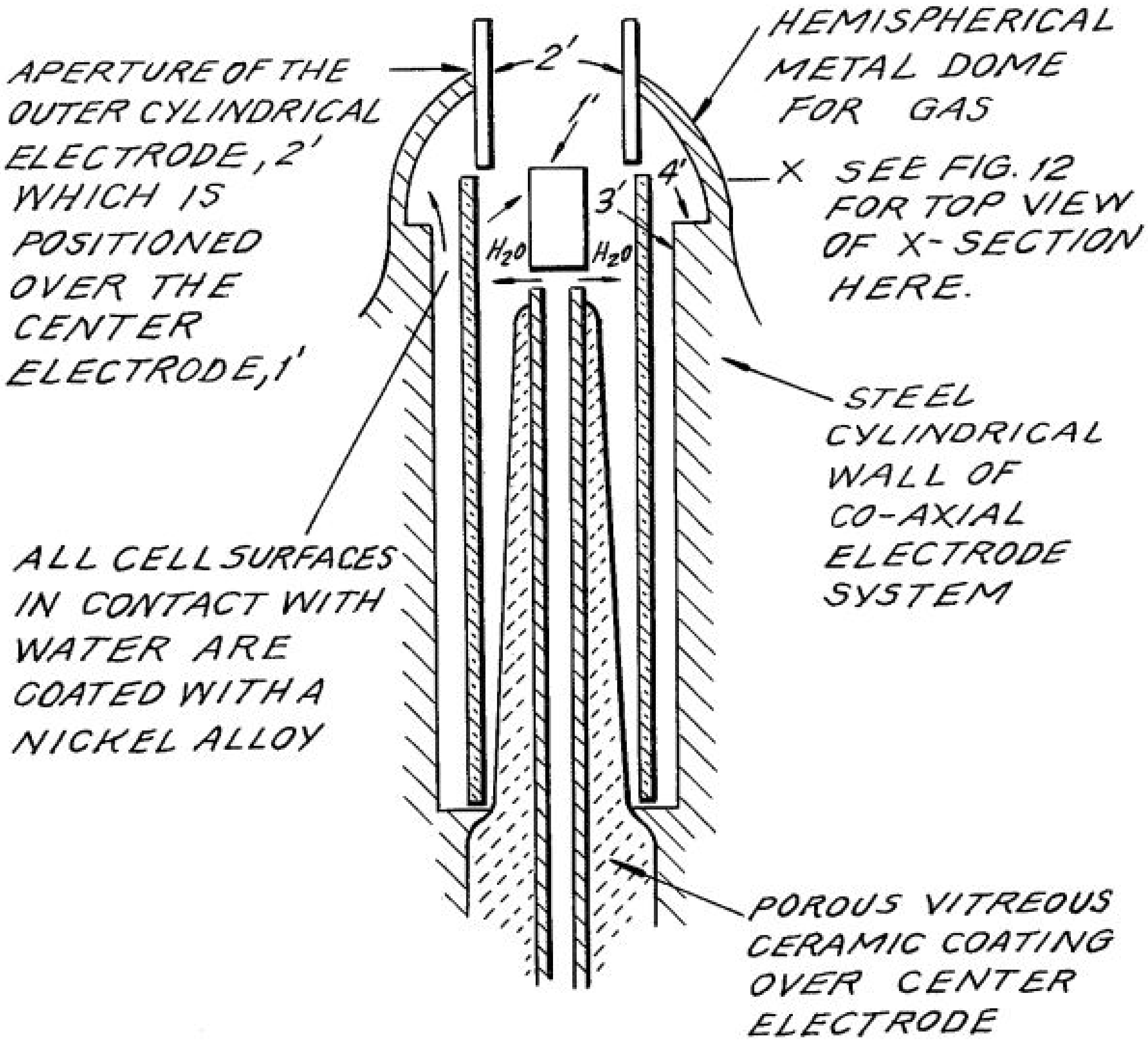

THE WATER CELL SECTION OF COMPONENT II

Inventor: Bernard Iwanciow (United States Navy). **Patent № 4628010 "Fuel cell with storable gas generator" – 1986**

A fuel cell operable by two gas generators which produce hydrogen and oxy[gen] by oxidation and reduction of hydrogen and oxygen containing salts respectively. --- to provide a method of extremely high energy storage. --- This invention entails a hydrogen/oxygen open cycle fuel cell which derives its working fluid from solid gas composition gas generators. This system is capable of delivering 2 kilowatts of power for 1000 seconds at a potential of 35 volts, and therefore is especially suited for use as a primary electric power source for missile power systems.

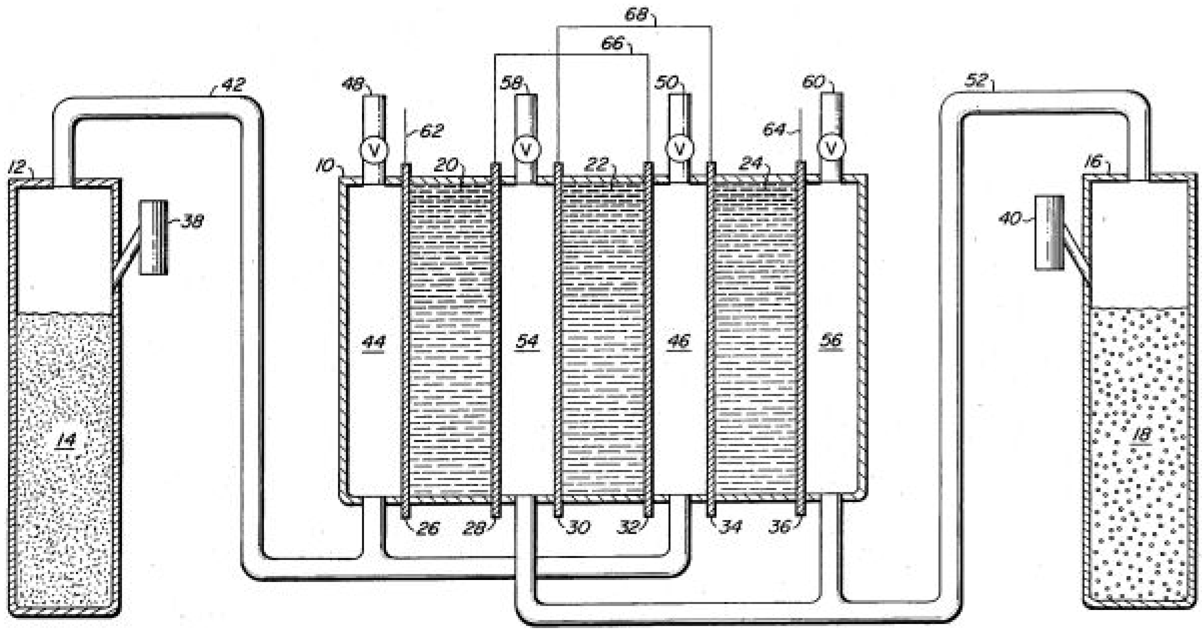

14: hydrogen gas generating composition

10: fuel cell assembly

18: oxygen gas generating composition

Inventor: Bernard Ofenloch. Patent № 4599158

“Circular coil electrolysis apparatus” – 1986

This disclosure relates to a simple electrolysis apparatus utilizing no physical electrical connecting means to an array of electrodes. The apparatus comprises an array of electrode plates aligned radially from the axis of symmetry, a container housing the electrode plates or cells, a coil of wire around the periphery of the container and means to provide an appropriate variation in the coil current conducive to the occurrence of the electrolysis process between the electrode plates.

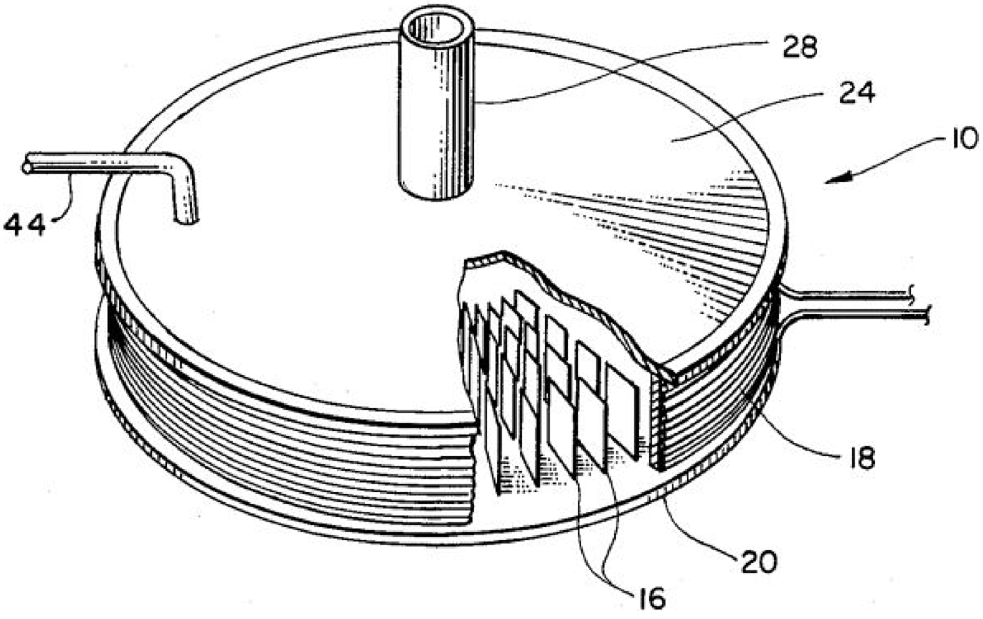

Inventors: Shigeta Hasebe, Takeo Miyazawa, Susumu Daidoji (Japan). Patent № 4747925 "Apparatus for simultaneous generation of oxygen and hydrogen gases" – 1988

While a large number of positive and negative electrodes are alternately arranged in an alignment on a same level in an electrolytic tank, a pair of **magnets** having the polarities thereof fixed in the same direction and which are disposed along the direction horizontally orthogonal to the arrangement of the electrodes of the same level, so that an electric field and a magnetic field will be generated on the horizontal directions orthogonal to each other and a force according to the Fleming's left-hand rule will be directed to the upward direction perpendicular to both the electric field and the **magnetic field**. The small bubbles adherent to the surface of the electrodes are enabled to be separated therefrom and allowed to float up owing to the addition of the upward force to their insufficient buoyancy.

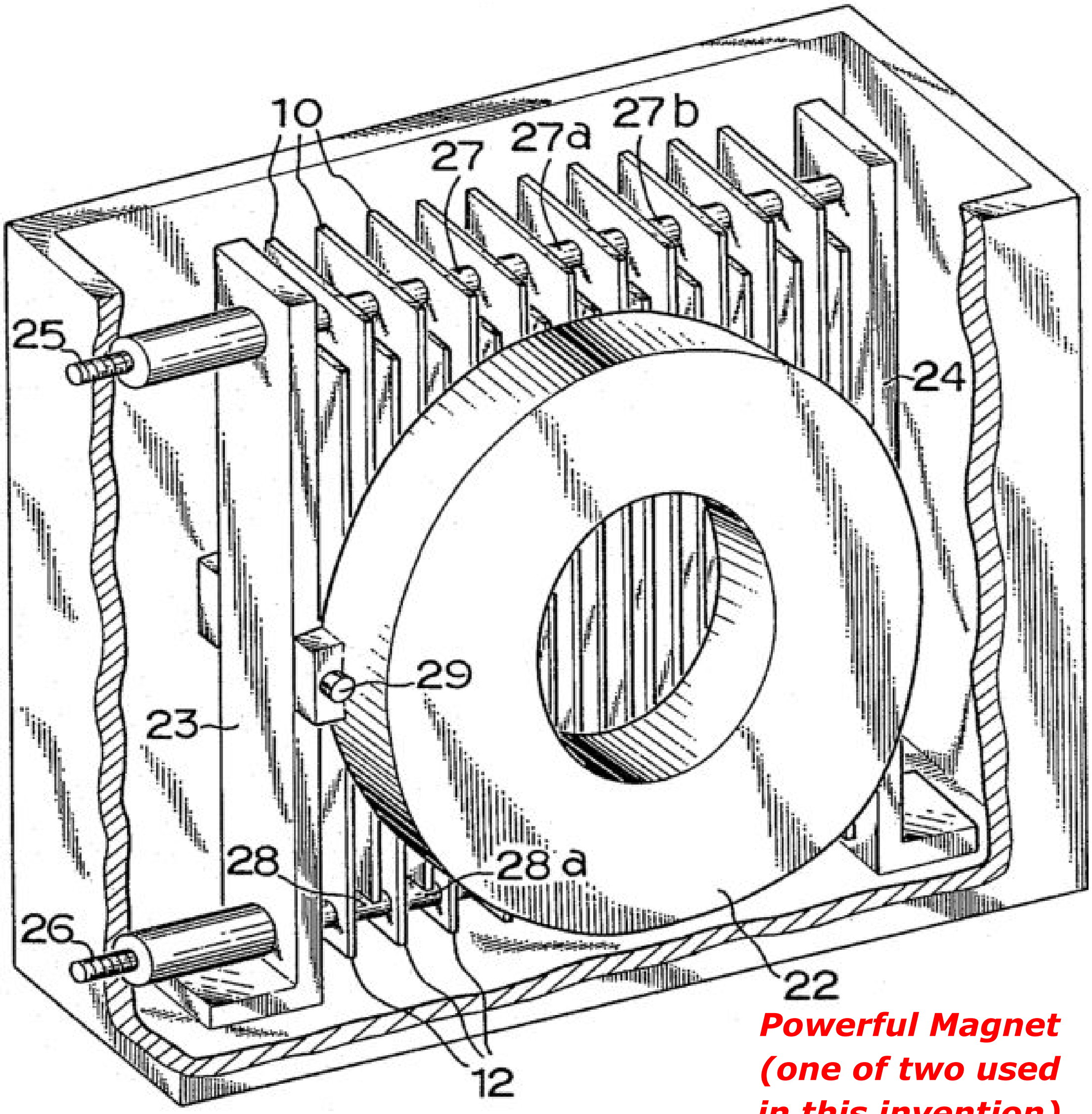

Powerful Magnet (one of two used in this invention)

Inventor: Michael McCambridge. Patent № 4726888 "Electrolysis of water" – 1988

Water is decomposed into hydrogen and oxygen gases by impressing alternate ones of a plurality of sheet electrodes a direct current of given polarity having low voltage and high amperage while simultaneously impressing on the cathode and anodes of a plurality of electrolytic cells, individually sandwiched between the sheet electrodes a high voltage and low amperage direct current, while the sheet electrodes and the electrolytic cells are all immersed in an aqueous electrolyte solution.

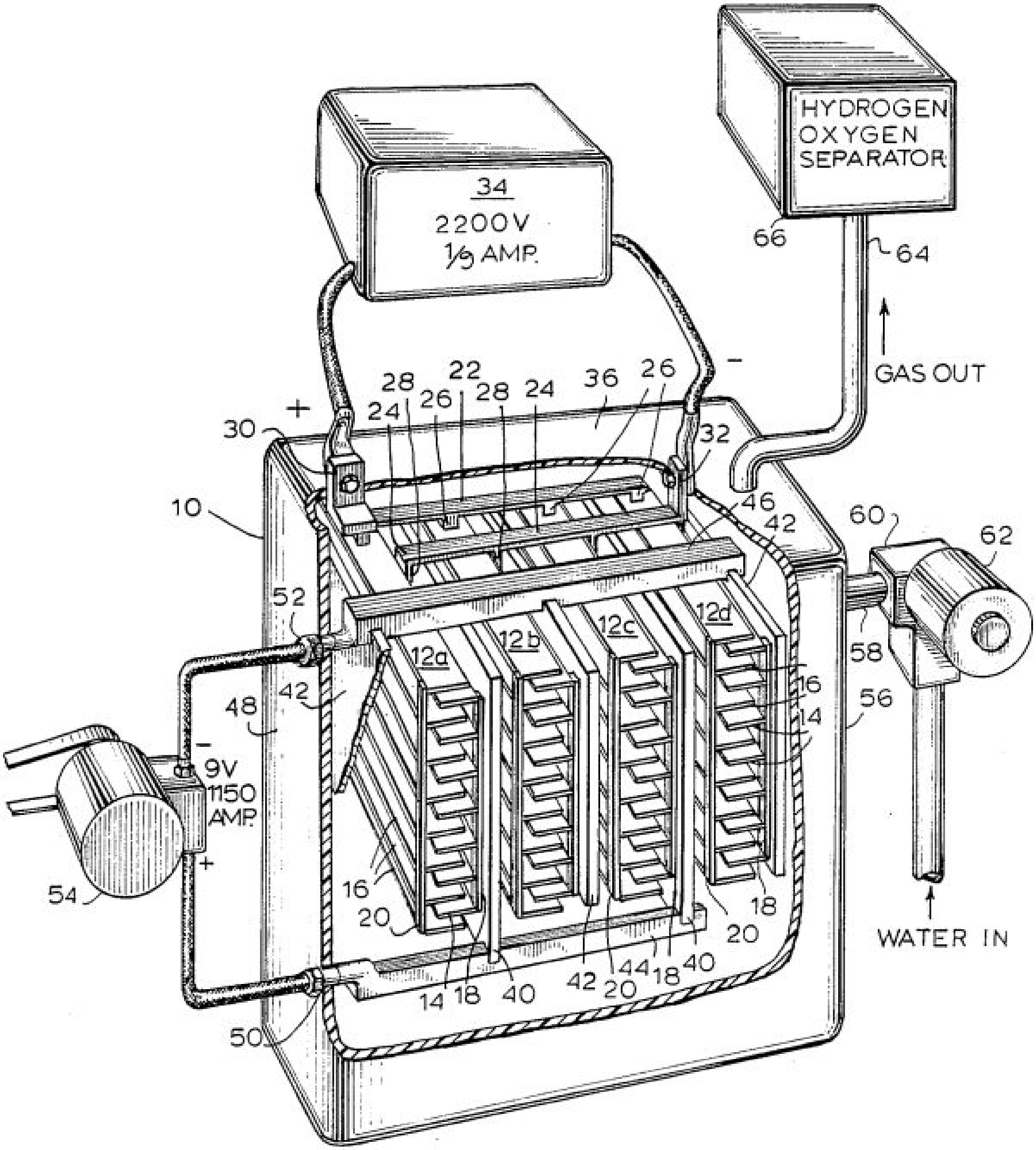

Inventor: **Stanley Meyer**. Patent № 4936961 "Method for the production of a fuel gas" – 1990

A method for obtaining the release of a fuel gas mixture including hydrogen and oxygen from water in which the water is processed as a dielectric medium in an electrical resonant circuit.

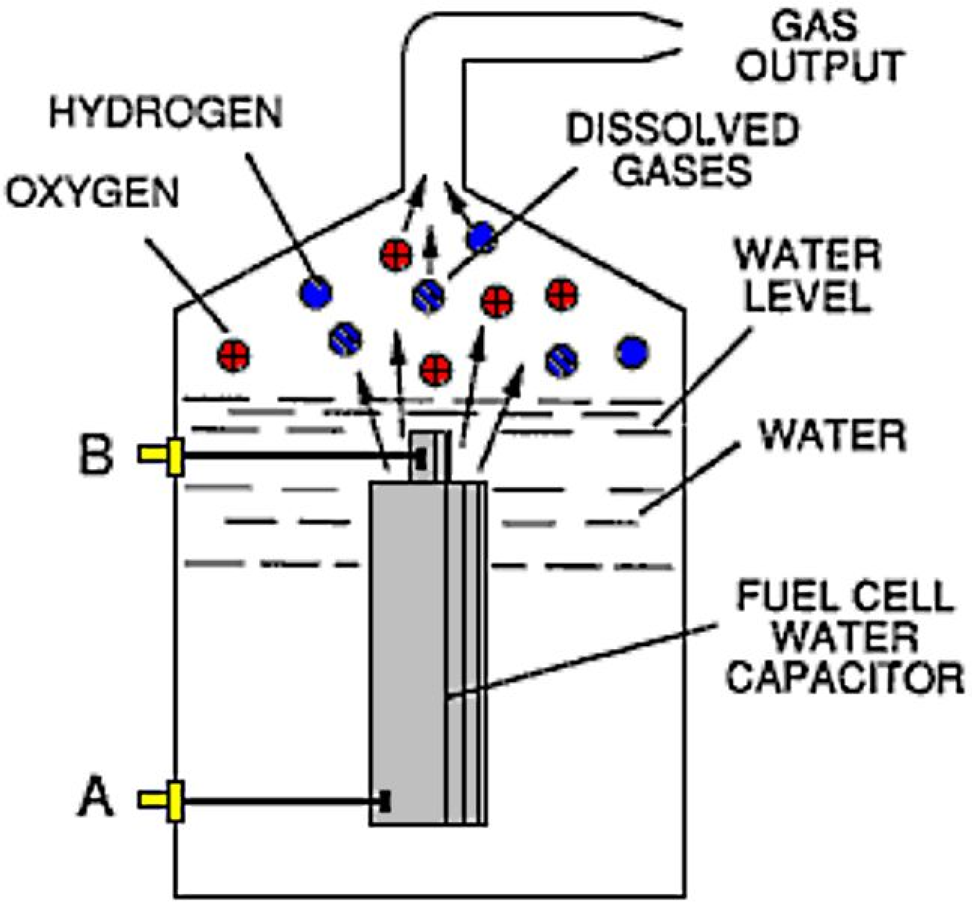

Image enhancement by Patrick J. Kelly

Inventor: Woodrow Lee (United States Navy). Patent № 5143047 "Material and method for fast generation of hydrogen gas and steam" – 1992

A high power pulse of electrical current causes a metal conductor to explode and initiate a reaction between an aluminum or ***aluminum alloy powder and water*** which ***generates hydrogen gas*** at a high temperature and pressure. The reaction mixture is released into a second larger chamber equipped with heat exchanger, which extracts useful heat energy and cools down the reaction mixture. The hydrogen gas is then separated from the solid metal oxide byproducts in the cooled reaction mixture.

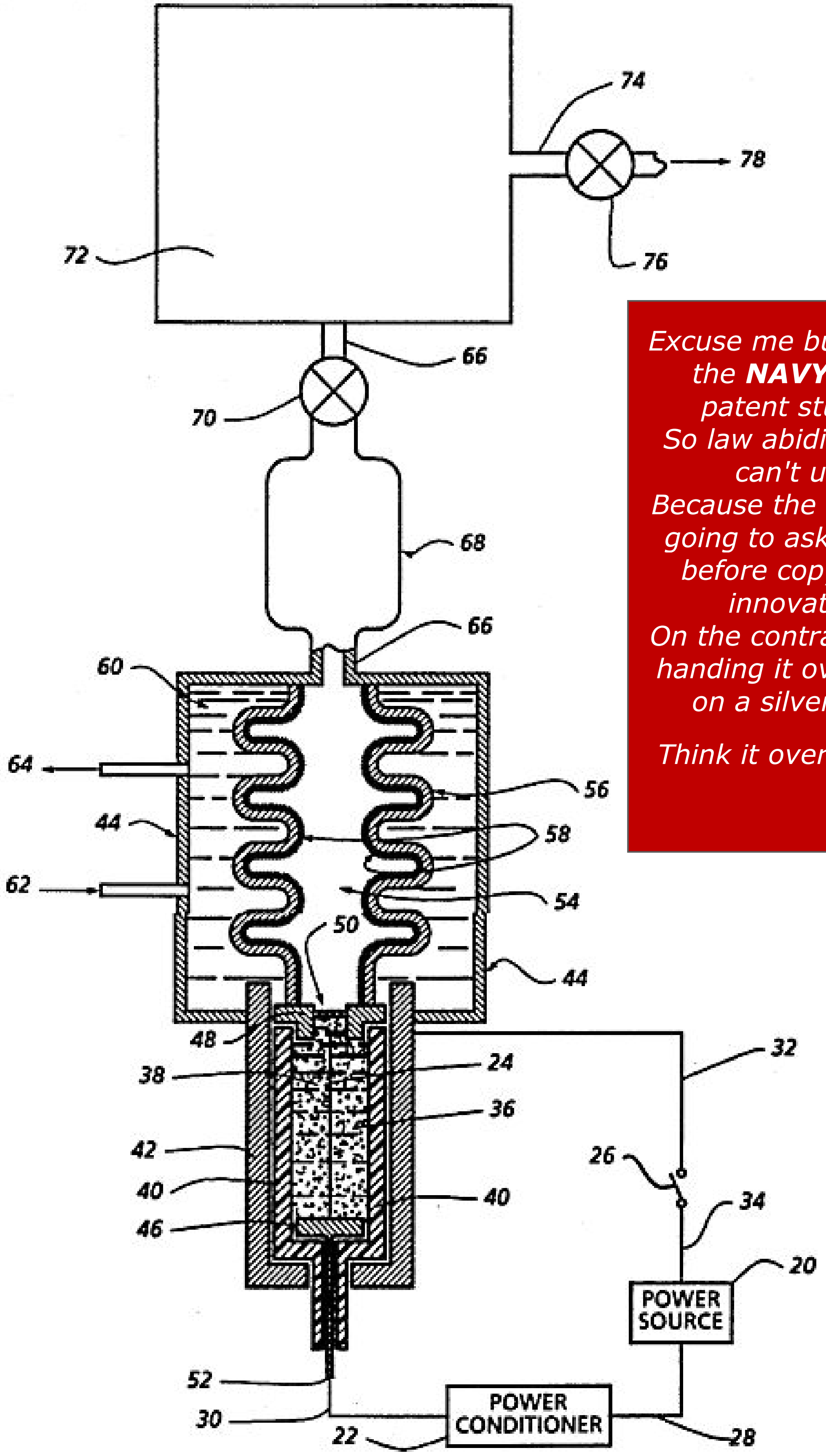

*Excuse me but why does the **NAVY** need to patent stuff?????*
So law abiding citizens can't use it?
Because the enemy isn't going to ask questions before copying such innovations…
On the contrary – you're handing it over to them on a silver platter!

Think it over, Generals.

~Ozzie

*Inventor: **Stanley Meyer**. Patent № 5149407 "Process and apparatus for the production of fuel gas and the enhanced release of thermal energy from such gas" – 1992*

Water molecules are broken down into hydrogen and oxygen gas atoms in a capacitive cell by a polarization and resonance process dependent upon the dielectric properties of water and water molecules. The gas atoms are thereafter ionized or otherwise energized and thermally combusted to release a degree of ***energy greater than that of combustion*** of the gas in ambient air.

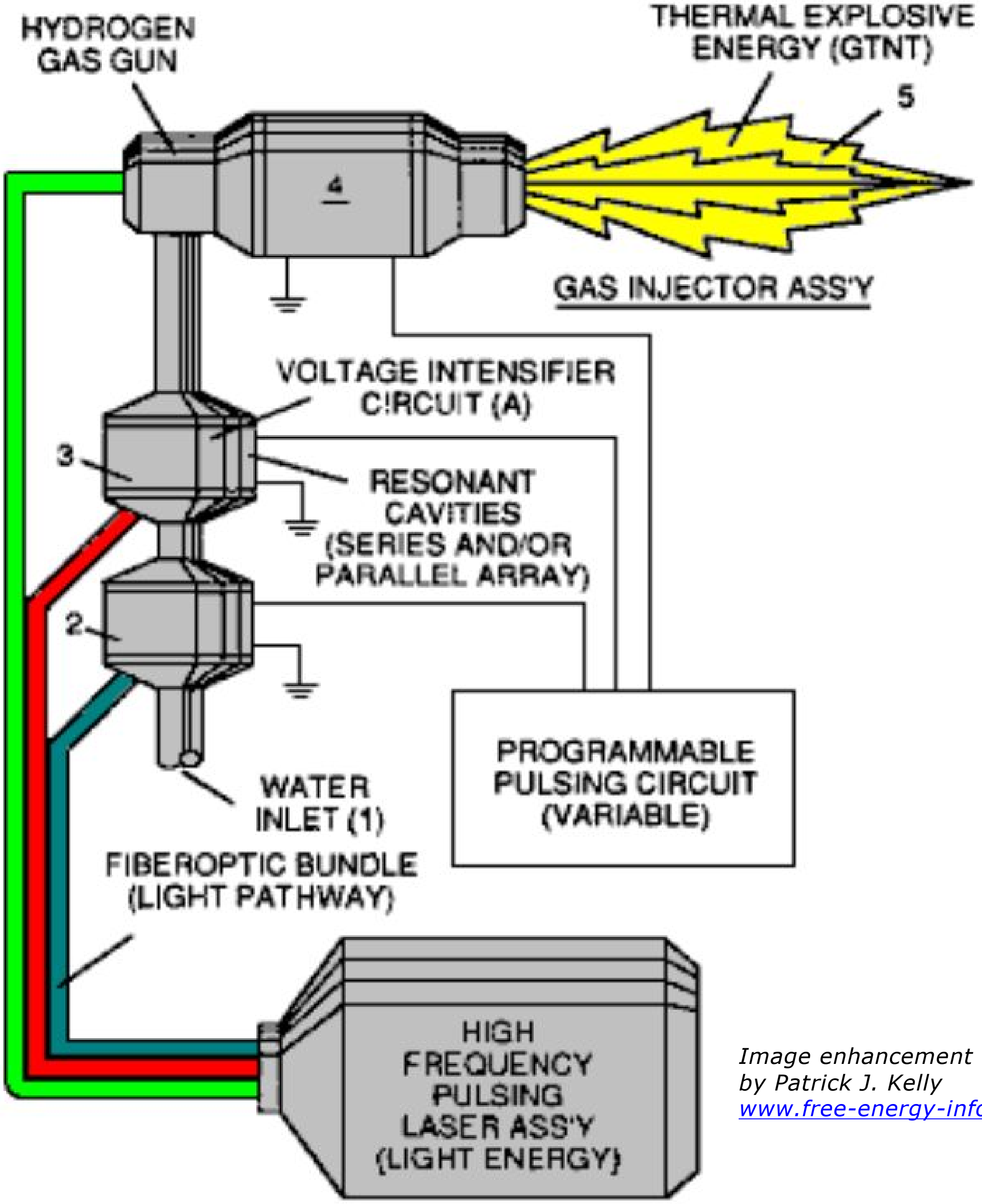

Image enhancement by Patrick J. Kelly www.free-energy-info.com

Image enhancement
by Patrick J. Kelly
www.free-energy-info.com

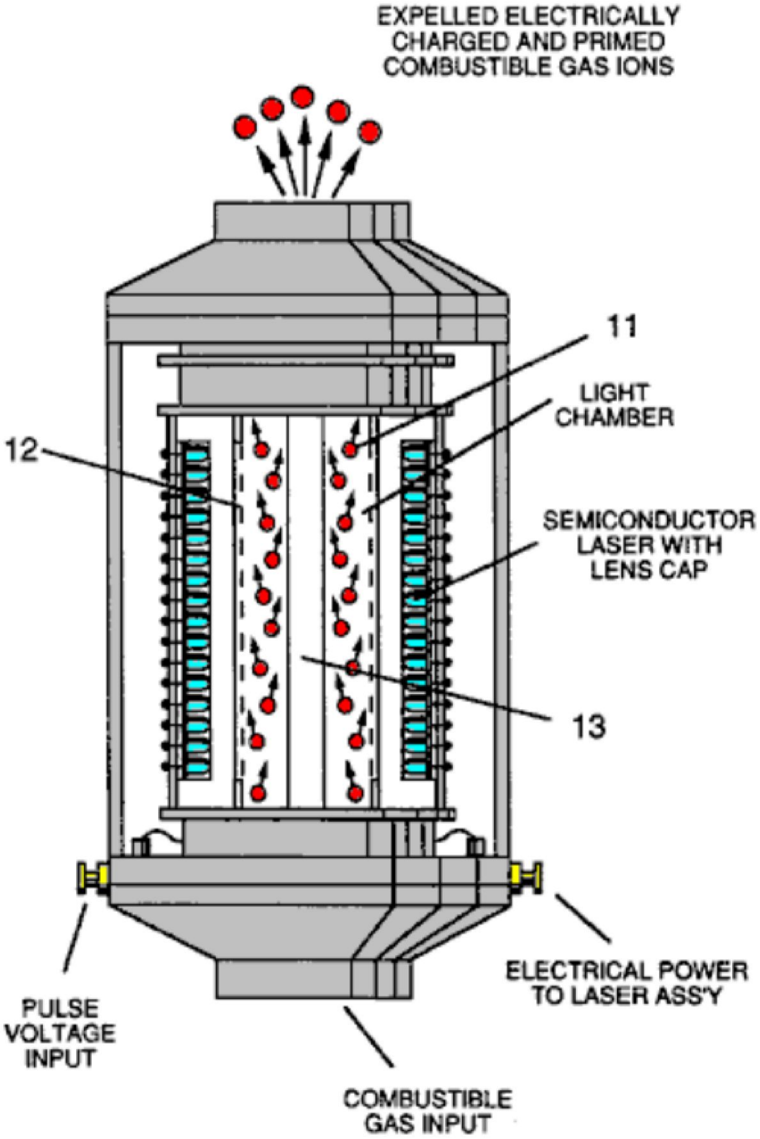

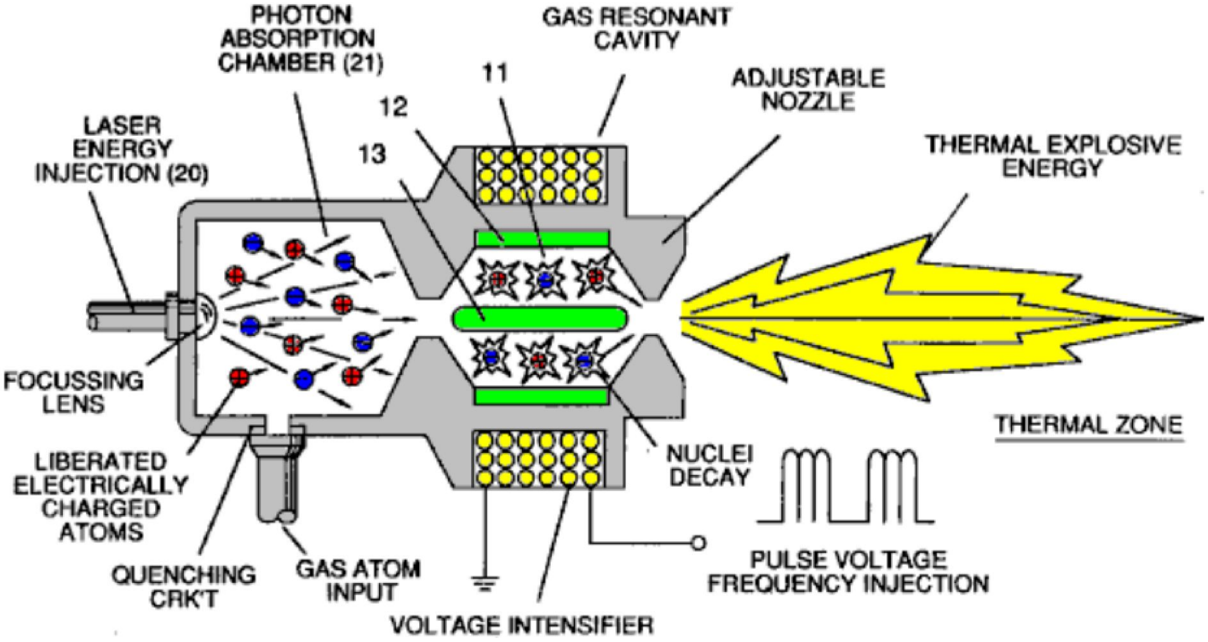

Inventors: Franz Schubert and David Grigger (NASA).
Patent № 5110436 "Water electrolysis" – 1992

This disclosure is directed to an electrolysis cell forming hydrogen and oxygen at spaced terminals. The anode terminal is porous and able to form oxygen within the cell and permit escape of the gaseous oxygen through the anode and out through a flow line in the presence of backpressure. Hydrogen is liberated in the cell at the opposing solid metal cathode, which is permeable to hydrogen but not oxygen so that the migratory hydrogen formed in the cell is able to escape from the cell. The cell is maintained at an elevated pressure so that oxygen liberated by the cell is delivered at elevated pressure without pumping to raise the pressure of the oxygen.

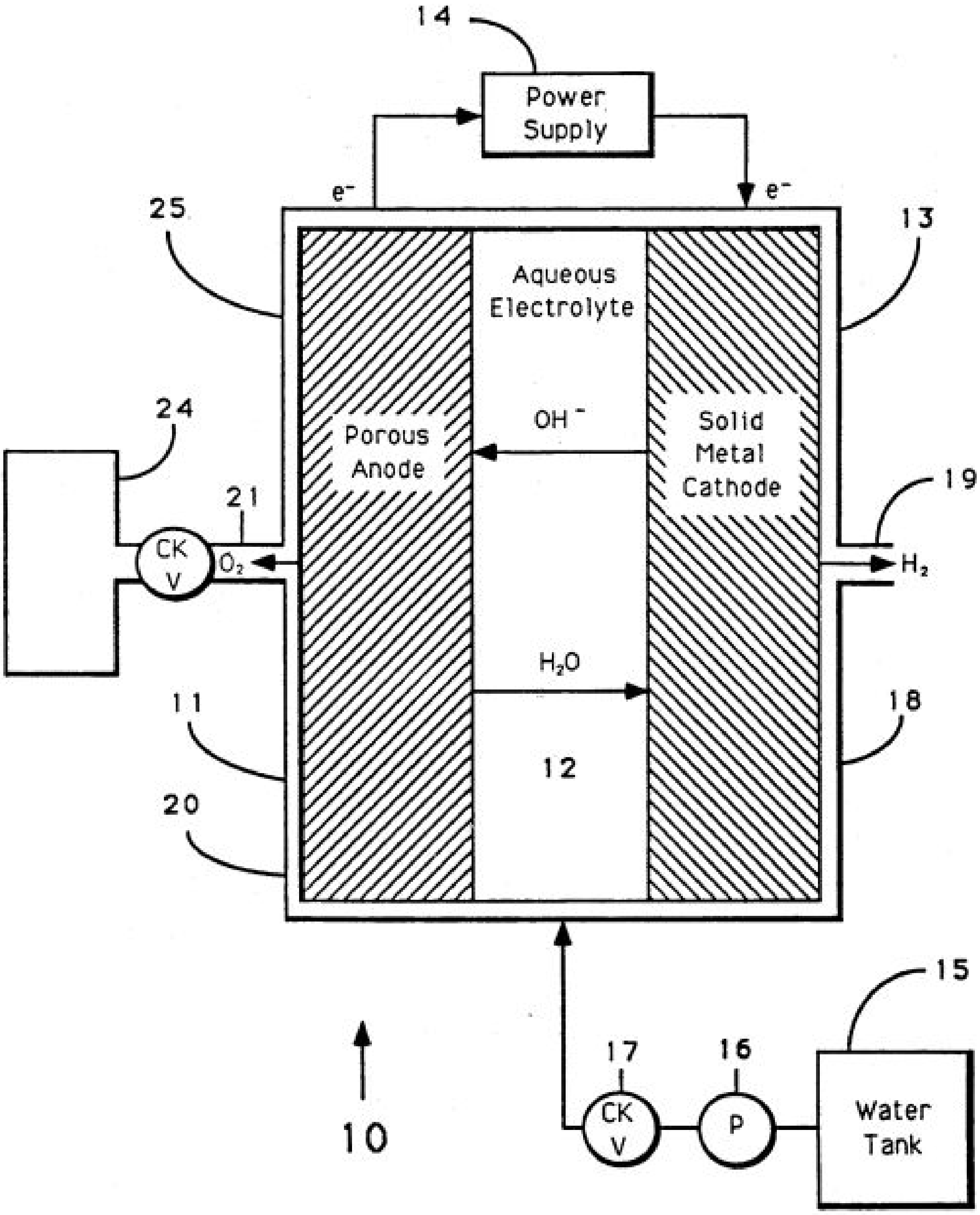

Inventors: Hanno Wenske, Arnold Gallien, Wolfgang Hanke, Wolfgang Lampe, Lothar Illgen. Patent № 5087344 "Electrolysis cell for gas-evolving electrolytic processes" – 1992

An electrolysis cell for gas-evolving electrolytic processes using at least one electrode having electrode elements arranged parallel is described; the electrode elements have a thickness of up to three times the mean bubble separation diameter and have a capillary gap with respect to one another such that a motion of the gas bubbles through the electrode is brought about substantially in the direction or in the opposite direction of the electric field between the reaction surfaces of the anode and cathode.

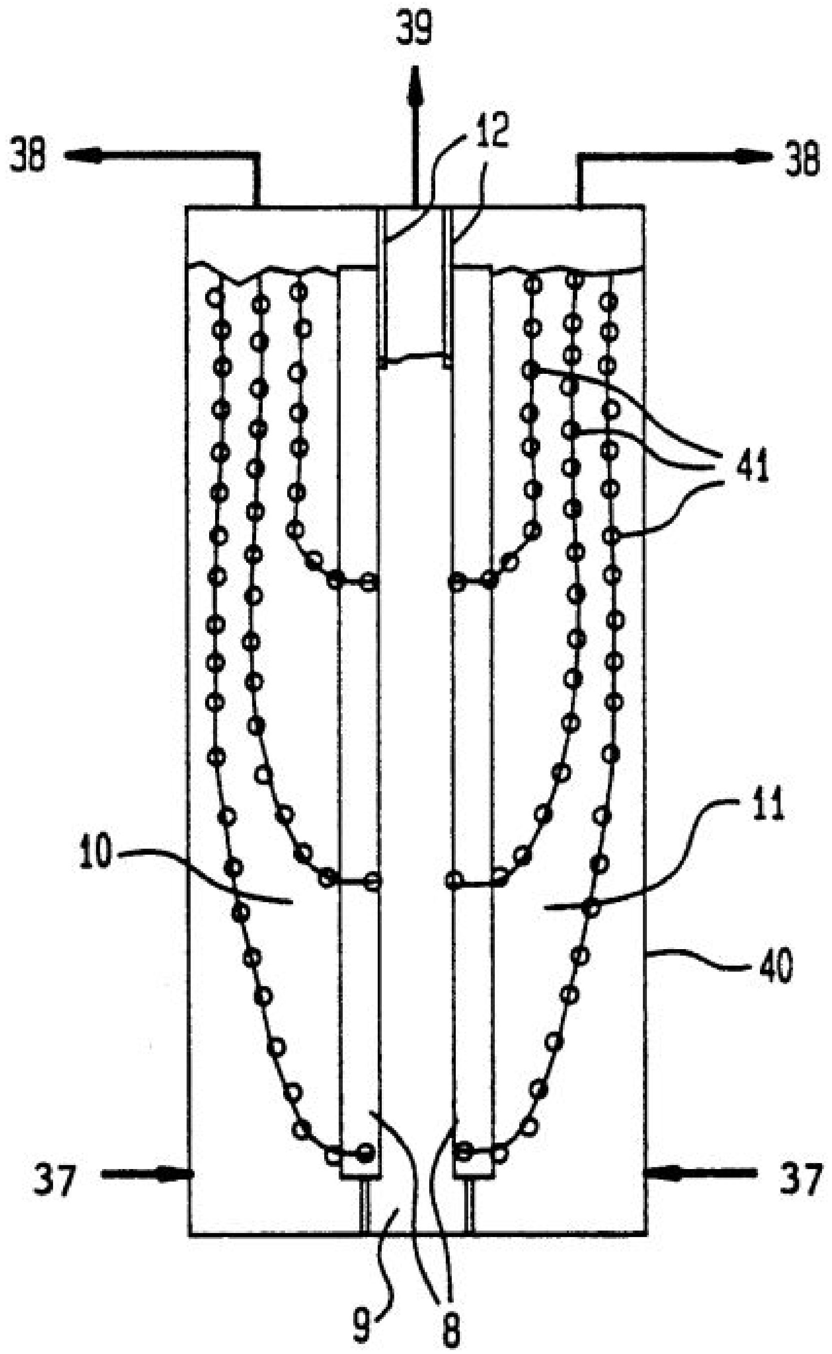

Inventor: Martin Klein. Patent № 5540831
"Electrolytic hydrogen storage and generation" – 1996

Hydrogen storage and generation is accomplished using an electrolytic cell which employs an inert gas electrode, a rechargeable battery electrode having an active material which stores hydrogen or is close to the potential of hydrogen, and a sealed housing which houses the electrodes, a separator and an aqueous electrolyte and has a port for extracting hydrogen generated in the cell.

NOTE THE USE OF SEPARATOR [8] while the gases are eventually MIXED. (~Ozzie)

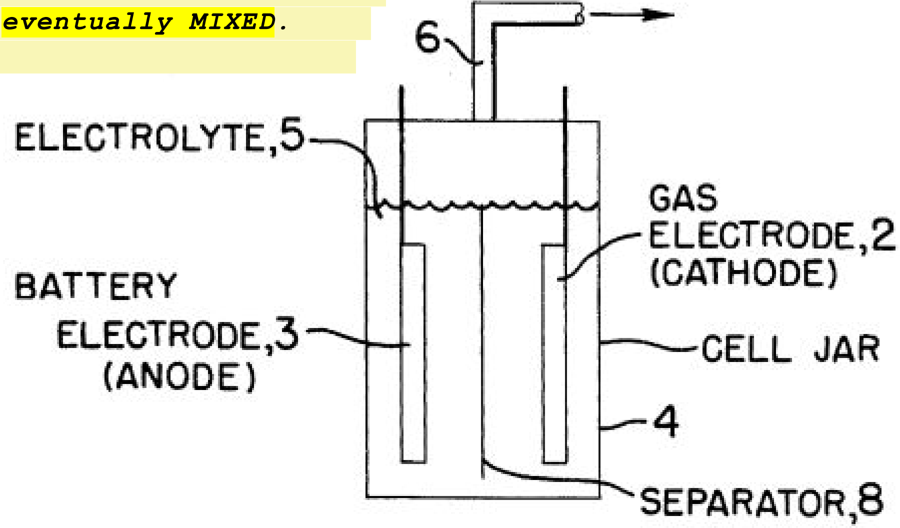

Inventor: Yan R. Kucherov. Patent № 5632870
"Energy generation apparatus" – 1997

Electrolytic cell apparatus and methods for generating a useful energy product from a plurality of energy sources. In a preferred embodiment, hydrogen gas is produced at a cathode by transmission of electrons through a low voltage potential barrier to electron flow achieved by careful control of electrolyte constituent concentrations and surface materials on the cathode. A portion of the energy captured in the hydrogen gas is provided by heat transmitting activity of ions dissociated from water at an anode which catalytically dissociates the water and thereby transfers thermal energy from the anode to the ions and other constituents of the cell electrolyte.

Thermal energy is replaced in the anode by absorption of heat from the surrounding environment.

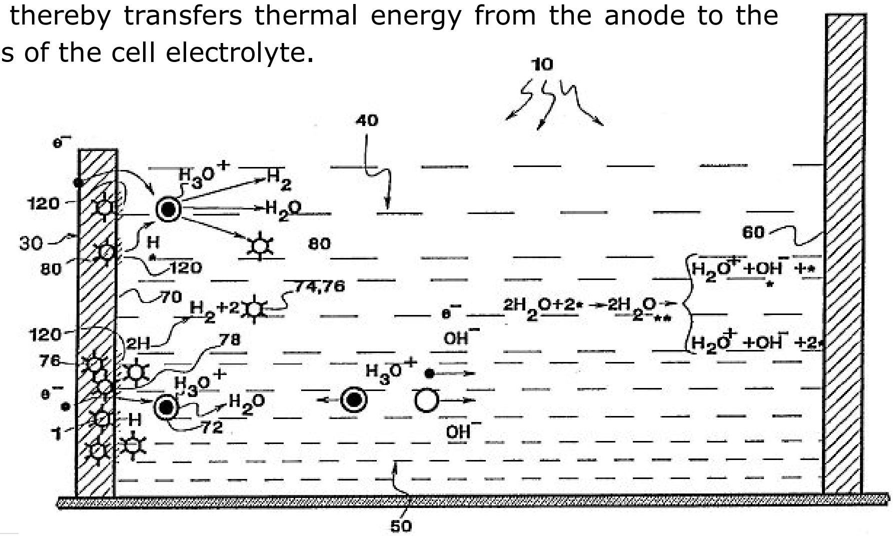

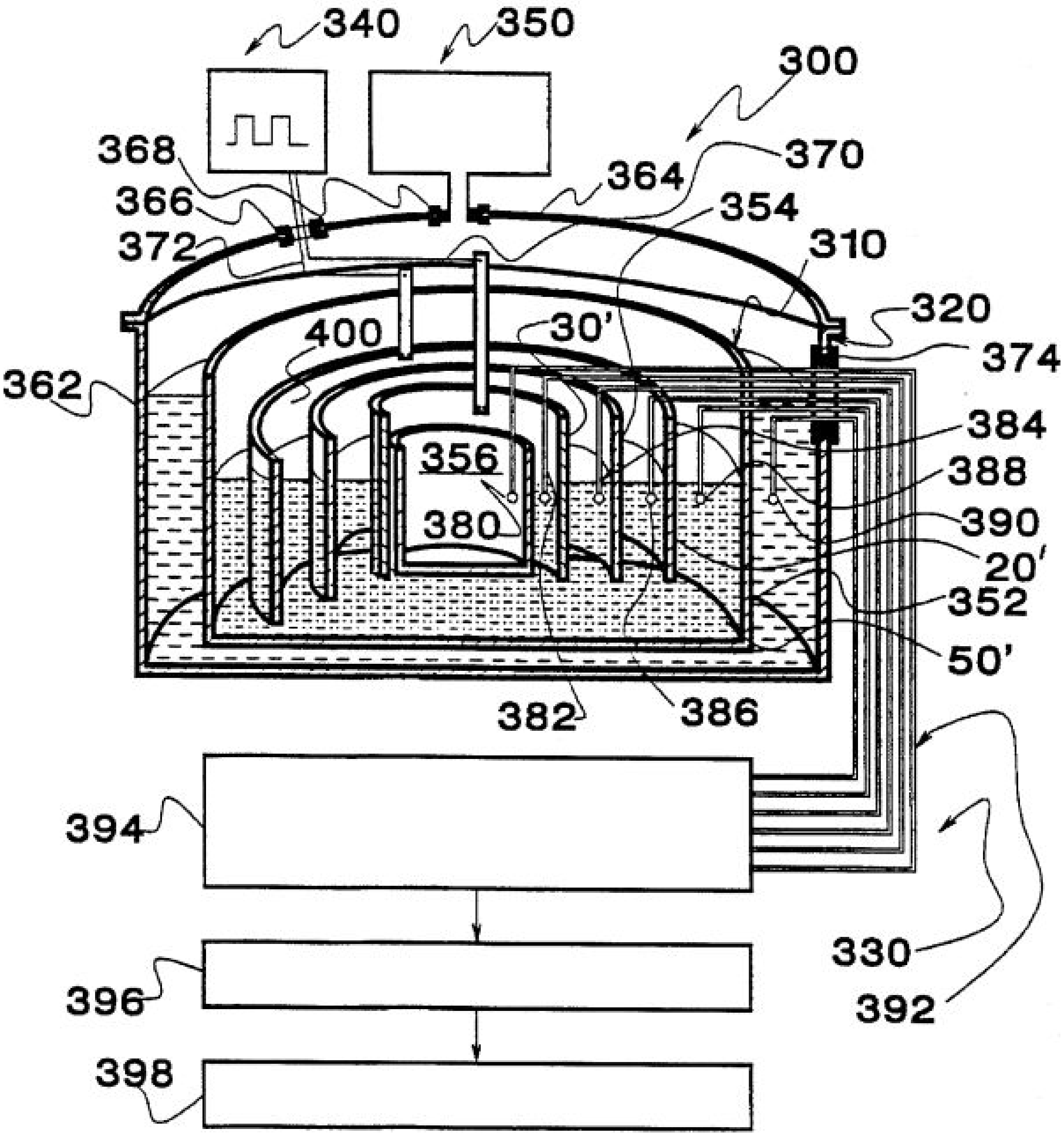

Inventor: Jerome Lemelson. Patents № 5552675 & № 5628881 "High temperature reaction method" – both from 1997

In the ABSTRACT it says: "A high temperature reaction apparatus for reacting on solid, liquid and gaseous materials to change their state and/or chemical compositions. High temperatures are generated within a reaction chamber by means of electrical energy applied to electrodes or other means for generating radiant energy. The radiant energy may be in one or more forms such as a beam or a plasma. In a preferred form, the apparatus is controlled by a master controller such as a computer which generates control signals applied to control the admission of a reaction material or materials to a reaction chamber, the operation of one or more electrical energy to radiant energy generating means and, in certain arrangements, the removal or products of the high temperature reaction from the reaction chamber. Controlled chemical and/or physical reactions may thus be effected under computer control to perform such functions as incineration, the production of select chemicals, the refining of metals, the comminuting of solids, the vaporization of solid materials or select portions thereof, the production of select gases from vapors and solid materials and the coating of surfaces by particulate and/or vapor deposition. The apparatus may also be operated to provide combinations of such processes in a single reaction chamber or in a series of chambers joined together for the sequential and continuous processing of solid, liquid, vaporous and/or gaseous matter fed per se or as a mixture or separate streams thereof.”

Further down the Patent you'll see that producing hydrogen and oxygen is just one of many useful applications of this machine: “In addition to various chemical reactions, hydrogen atoms may be so separated from oxygen atoms of water generating bubbles of hydrogen and oxygen gas mixture in the water passed through the reaction chamber or duct which bubbles may be collect-downstream by know[n] means, Such mixtures may be stored or burned or otherwise used in further reactions or may have the hydrogen and oxygen components thereof separated from each other for various separate uses.”

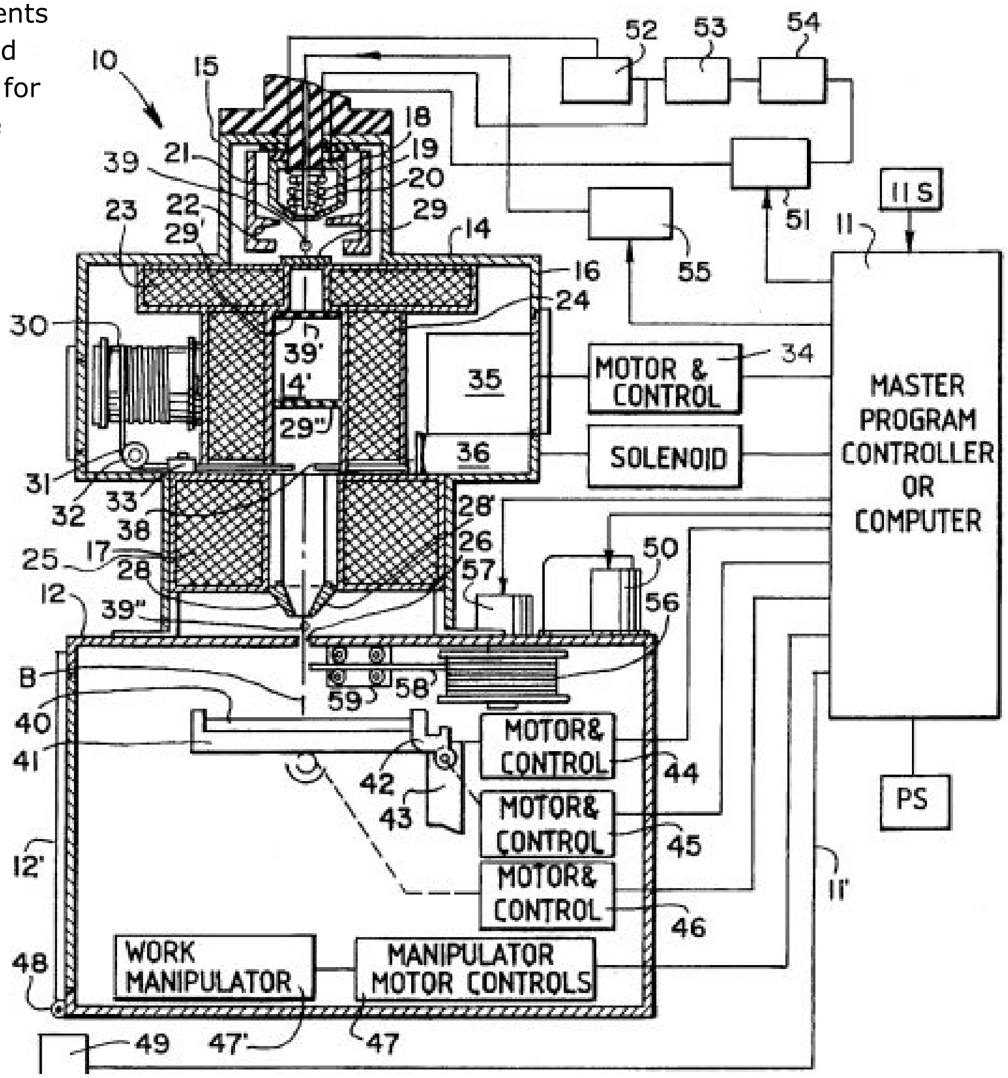

Inventor: Mervyn Leonard Caesar. Patent № 5711865 "Electrolytic gas producer method and apparatus" – 1998

Electrolytic gas producer apparatus is provided wherein a water inlet has a pressure sensor and solenoid valve control passes water through a filter by pump to a reservoir. Cell chambers maintain electrolyte by supply pump and solenoid valve delivering to the cell via solenoid valves responsive to a level sensor. Gas outlet apertures extend into a polling manifold via solenoid valves and thence to a wash tank. The gas is removed from the tank via a manifold to a vacuum pump, which draws the gas through a first filter including a drain line and a secondary filter for residual moisture removal. After the pump the gas passes under water in a flashback arrester filled with metal mesh. The gas then travels to a moisture removing filter and delivery pumps for delivery via intermediate solenoid valves, an outlet manifold, and final solenoid valves which control delivery to an electronically monitored outlet flashback arrester comprising infrared sensors to detect and signal a flashback condition.

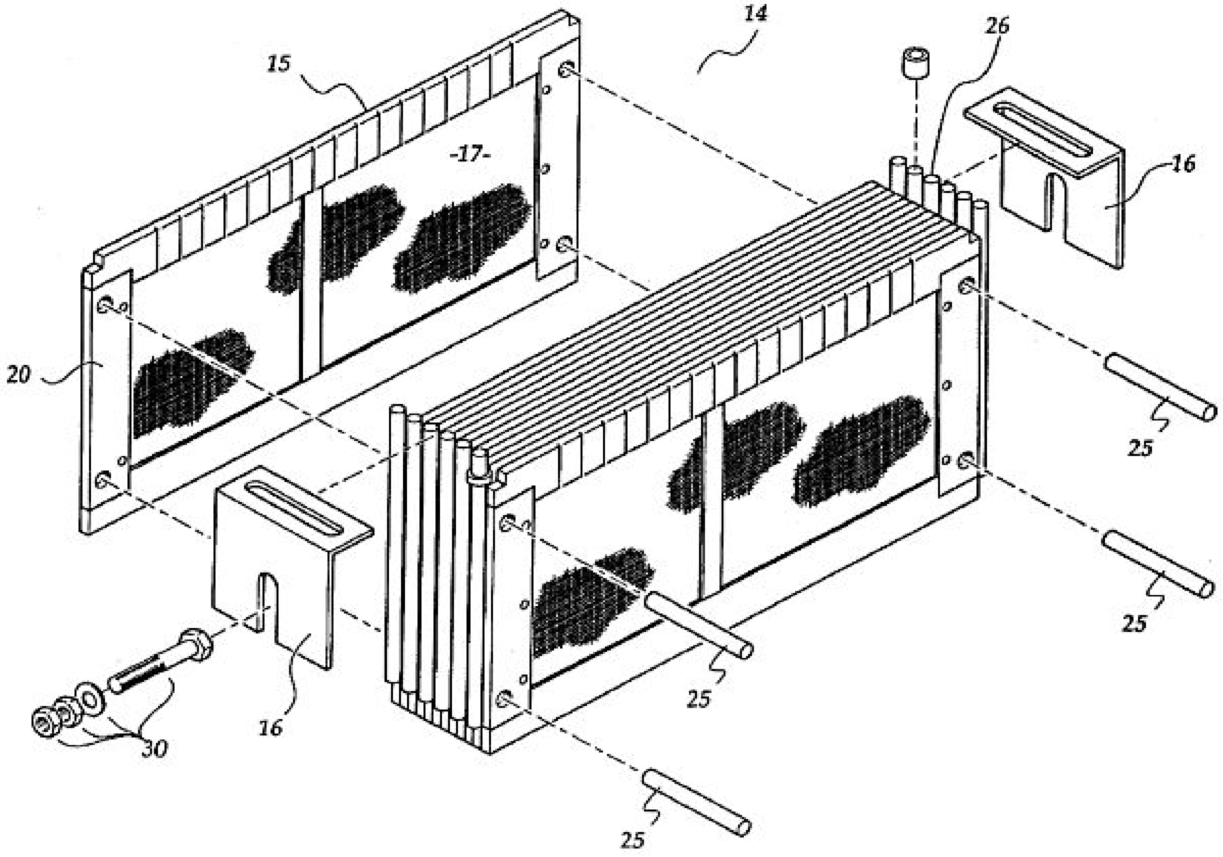

Inventor: Spiro Ross Spiros. Patent № 5843292 "Electrolysis systems" – 1998. (Similar to his Patent № 5997283 of 1999)

A cell arrangement for the electrolysis of water to liberate hydrogen and oxygen gases is described. A cell unit has a stacked arrangement of segmentation disks, a first type of (anode) cell plates, a second type of (cathode) cell plates and separation membranes.

Interconnecting conductive shafts pass through holes of the cell plates to have selective electrical interconnection therewith. Water and electrolyte are supplied by inlet ports to immerse the cell plates. The membranes normally isolate adjacent cathode and anode plates from the mixing of liberated oxygen and hydrogen gases while allowing ionic current to flow. By selective adjustment of the water/electrolyte pressure differential on the respective sides of the separation membranes, the admixture of the liberated gases can be produced. The liberated gases discharge through outlet ports.

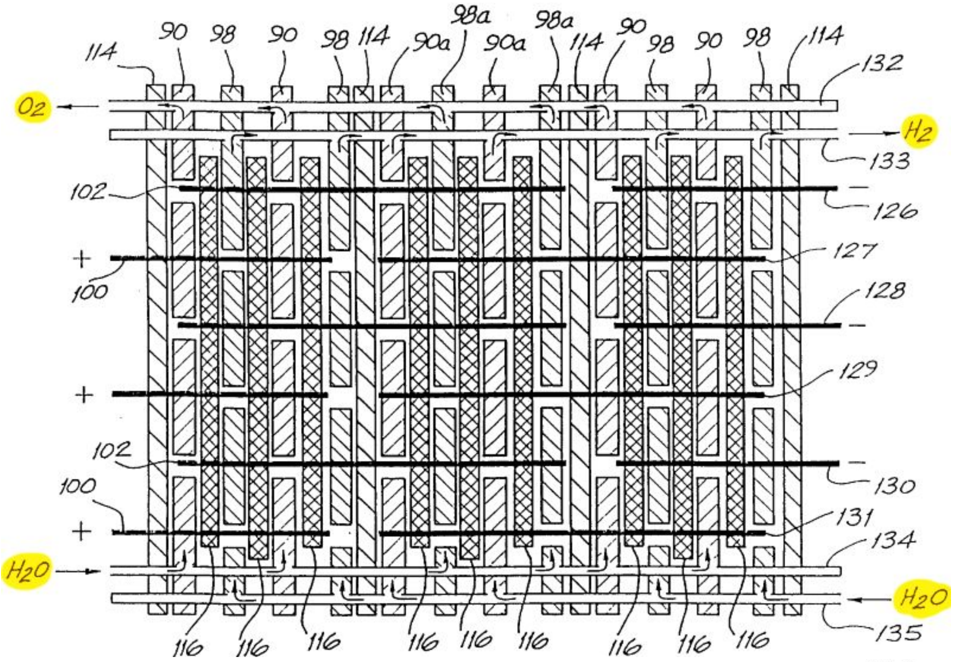

Above: **Electrolyzer**

Right: **Gas Scrubber**
and sight column

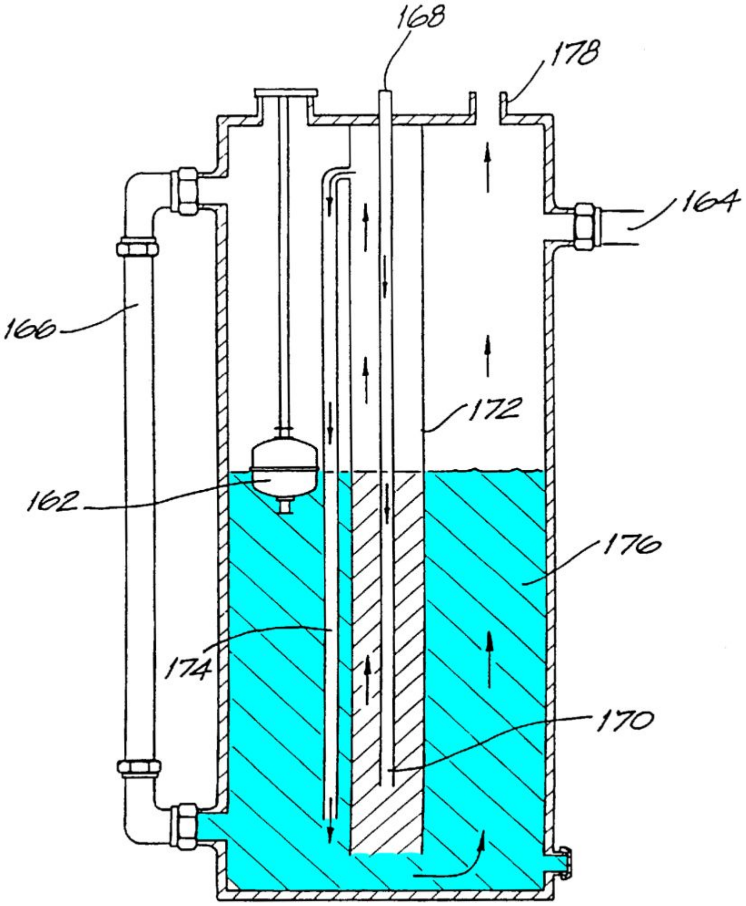

Inventor: John Daniel Christian. Patent № 5858185 "Electrolytic apparatus" – 1999

The invention is directed to a cell for an electrolytic apparatus, which comprises a pressure vessel containing a self-contained electrode unit. The electrode unit has an inlet for the supply of electrolyte and an outlet for liberated ad-mixed hydrogen and oxygen gas. The electrode unit further having ***plurality of spaced-apart concentric cylindrical electrodes*** and a pair of internal end plates provided at each end of the concentric cylinders. At least one of the internal end plates includes the electrolyte inlet and/or gas outlet. The pressure vessel comprises a cylindrical outer shell having planar transverse end plates, which are connected at or adjacent to the opposed ends of the cylindrical outer shell. ***The pressure vessel being capable of withstanding explosions of stored liberated gas.***

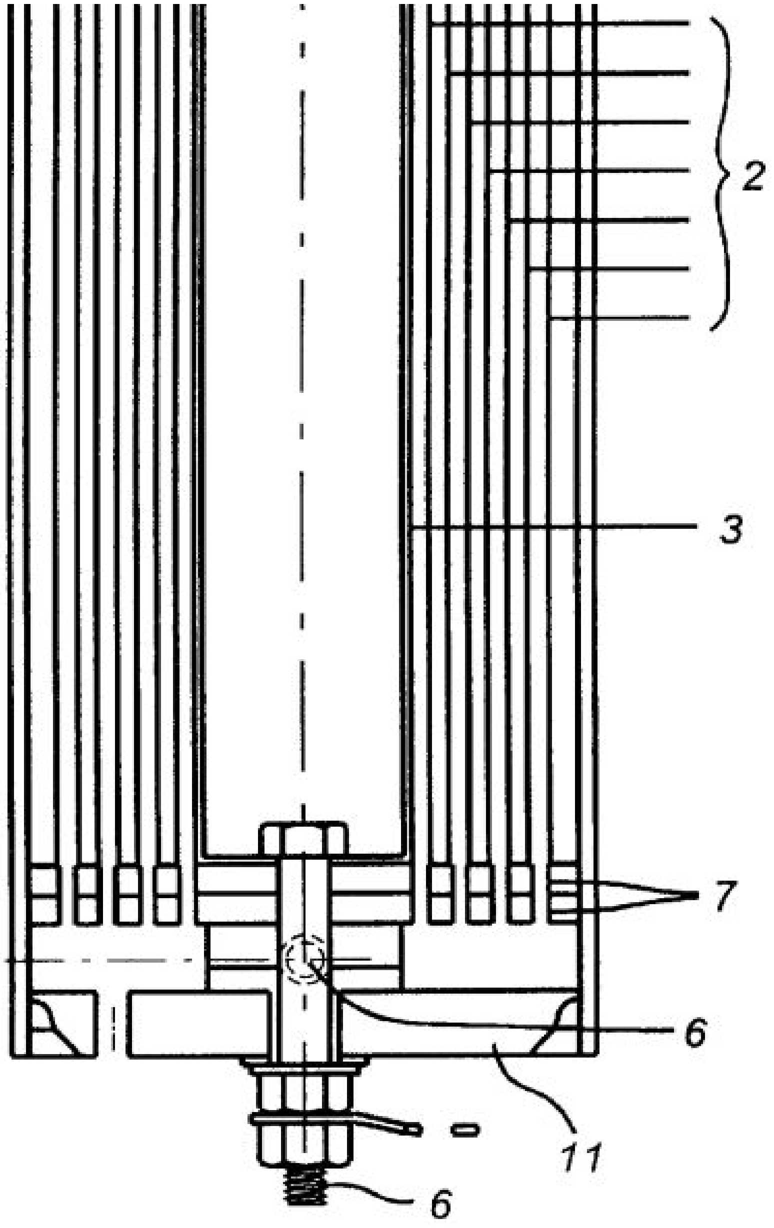

Inventors: Kiyoshi Hirai, Shinichi Yasui, Hiroko Kobayashi, Teruyuki Morioka, Akiko Miyake, Hiroyuki Harada (Japan). Patent № 5888361 "Apparatus for producing hydrogen and oxygen" – 1999

A simply configured cooling mechanism for an apparatus for producing hydrogen and oxygen is disclosed. The configuration makes it possible to freely select the type of heat exchanger, without any restrictions, in order to improve cooling efficiency. In particular, a heat exchanger for cooling deionized water in a deionized water tank, which contains an electrolytic cell, is installed outside the tank. An inlet to the heat exchanger is connected to a deionized water flow outlet from the tank that is below the level of the deionized water the tank by a pipe, and an outlet from the heat exchanger to tank is connected to a deionized water flow inlet that is positioned in the tank below the deionized water flow outlet.

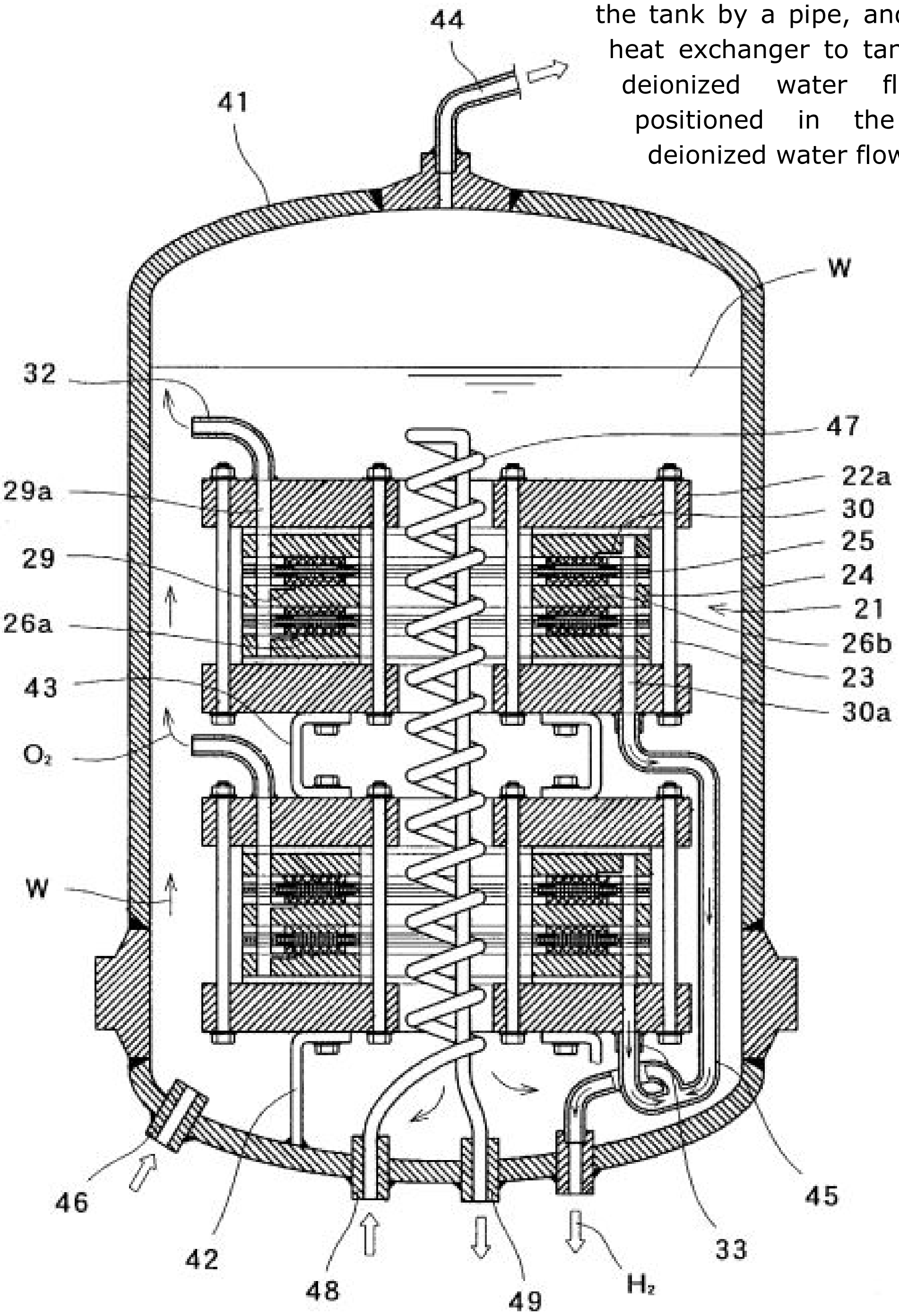

Inventors: Richard Baker, Kaaeid Lokhandwala;. Patent № 6011192 "Membrane-based conditioning for adsorption system feed gases" – 2000

A process for treating gas streams containing hydrogen and hydrocarbons. The process includes a membrane conditioning step to remove C_5 —C_8 hydrocarbons, followed by a *selective adsorption or membrane separation step to separate hydrogen from methane*. The membrane conditioning step uses a membrane selective for C_5 —C_8 hydrocarbons over hydrogen.

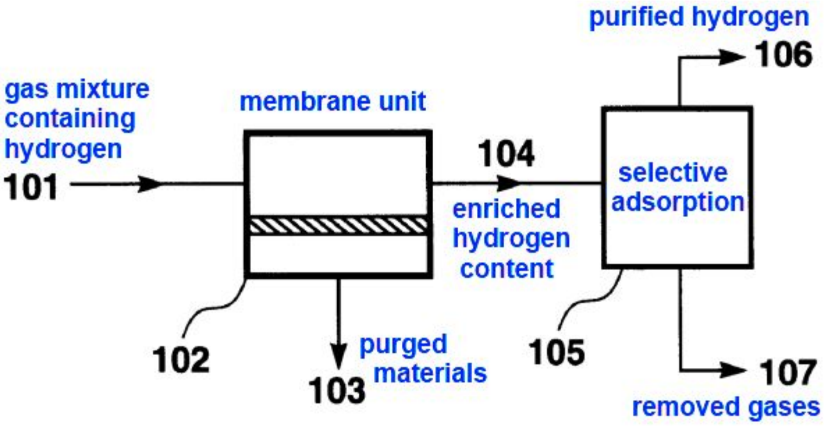

Inventors: Masahiro Mori & Toshiyasu Satoh. Patent № 6012915 "Method of combusting a water/fossil fuel mixed emulsion and combustion apparatus" – 2000

There is disclosed a method of combusting a water/fossil fuel mixed emulsion, which comprises elevating the temperature of a water/fossil fuel mixed emulsion, and vaporizing the emulsion, with a temperature-elevating and vaporizing apparatus 3, jetting the water/fossil fuel mixed gas thus formed by that elevation of the temperature and that vaporization from a burner 7, and bringing a ***Brown's Gas flame*** of a Brown's Gas combustion burner 5, in contact with the flow of the mixed gas, thereby combusting the water/fossil fuel mixed gas. There is also disclosed an apparatus for combusting a water/fossil fuel mixed emulsion. ***According to the combusting method and the combustion apparatus, it is possible to combust the water/fossil fuel mixed emulsion with good energy efficiency, and to obtain high calories resulting from the combustion.***

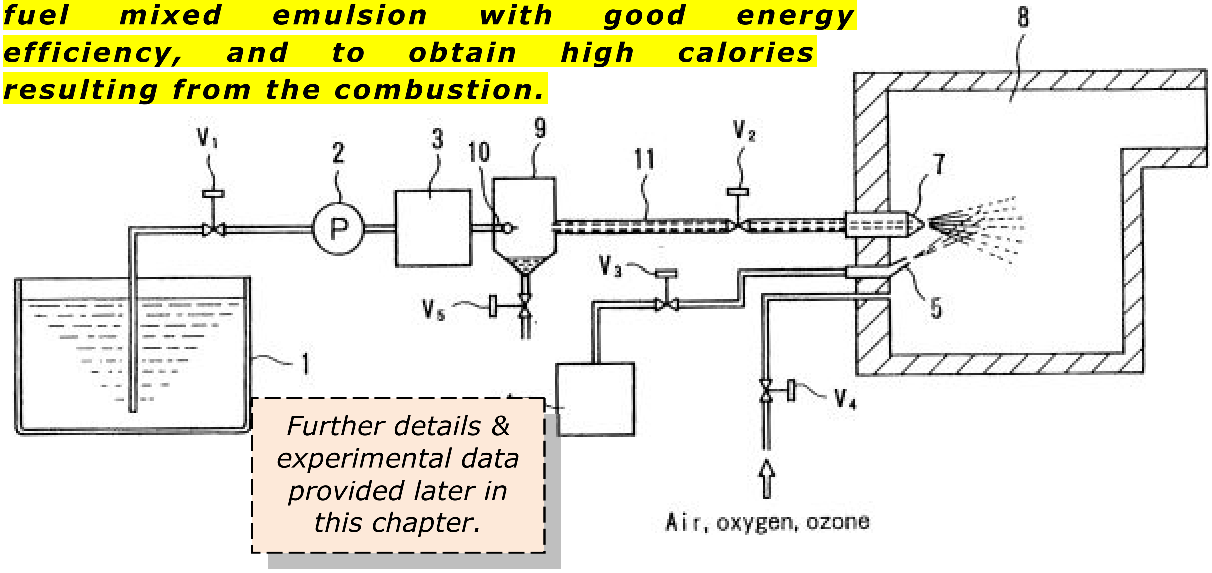

Further details & experimental data provided later in this chapter.

Inventor: Stephen Barrie Chambers (Xogen, Canada).
Patent № 6419815 "Method for producing orthohydrogen and/or parahydrogen" – 2002. Similar Patent № 6790324 – 2004

An apparatus for producing ***orthohydrogen***[144] and/or ***parahydrogen***[145]. The apparatus includes a container holding water and at least one pair of ***closely-spaced electrodes*** arranged within the container and submerged in the water. A first power supply provides a particular first ***pulsed signal to the electrodes***. A coil may also be arranged within the container and submerged in the water if the production of parahydrogen is also required. A second power supply provides a second pulsed signal to the coil through a switch to apply energy to the water. When the second power supply is disconnected from the coil by the switch and only the electrodes receive a pulsed signal, then orthohydrogen can be produced. When the second power supply is connected to the coil and both the electrodes and coil receive pulsed signals, then the first and second pulsed signals can be controlled to produce parahydrogen. The container is ***self-pressurized*** and the water within the container requires no chemical catalyst to efficiently produce the orthohydrogen and/or parahydrogen. ***Heat is not generated***, and bubbles do not form on the electrodes.

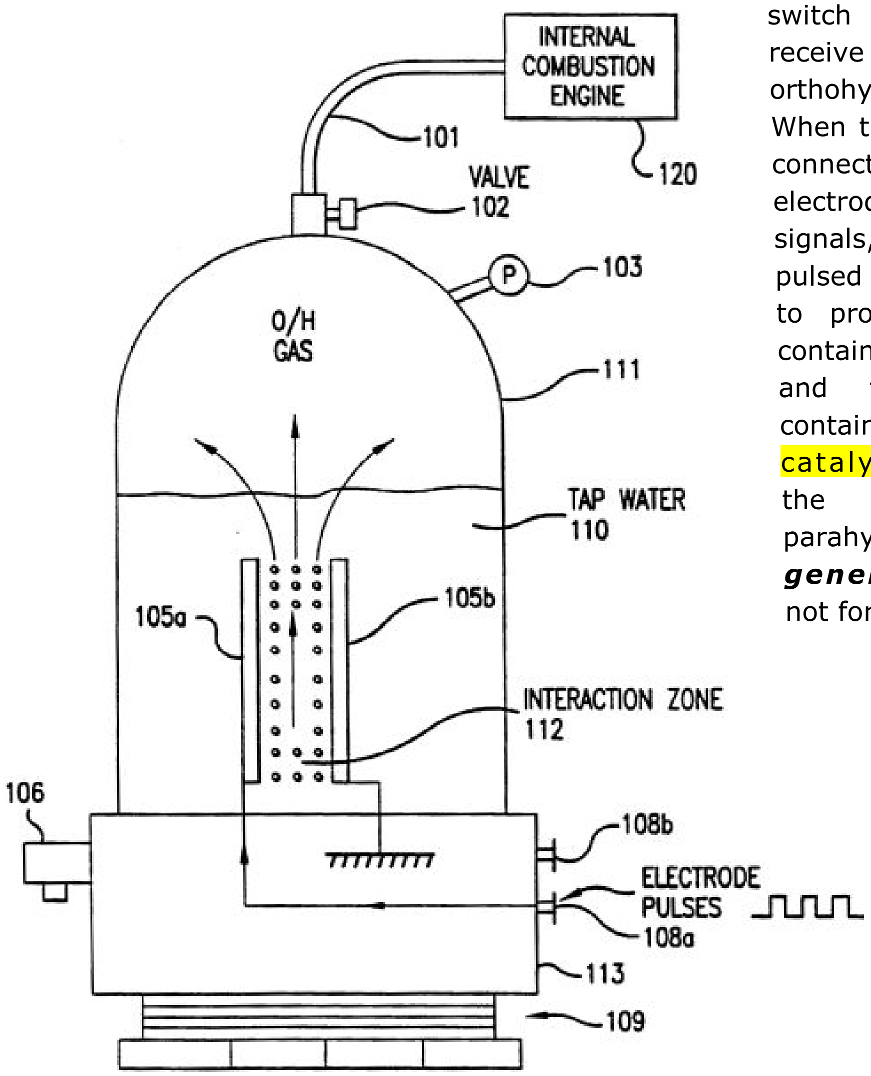

---

[144] It's not a short definition. See glossary.

[145] See glossary.

Inventor: Andrei Leonida. Patent № 6375812 "Water electrolysis system" – 2002

A water electrolysis system includes a water electrolysis cell stack having an anode and a cathode. A water storage tank having an outlet is disposed above the cell stack and communicates with an inlet of one of the anode and the cathode of the cell stack for ***gravity feeding water from the water storage tank to the cell stack***. A phase separator is disposed below and in communication with the water storage tank. The phase separator has an inlet for receiving a two phase stream including water and product gas exiting an outlet of the one of the anode and cathode of the cell stack, and includes a conduit having a lower end disposed within the phase separator for receiving water recovered in the phase separator. The conduit has an upper end extending into the water storage tank. Further, the conduit defines a plurality of openings along a portion of the conduit disposed in the phase separator such that the product gas received in the inlet of the phase separator enters the inside of the conduit through the openings and entrains and lifts water upwardly therewith through the conduit and into the water storage tank whereby ***water is recirculated through the cell stack***.

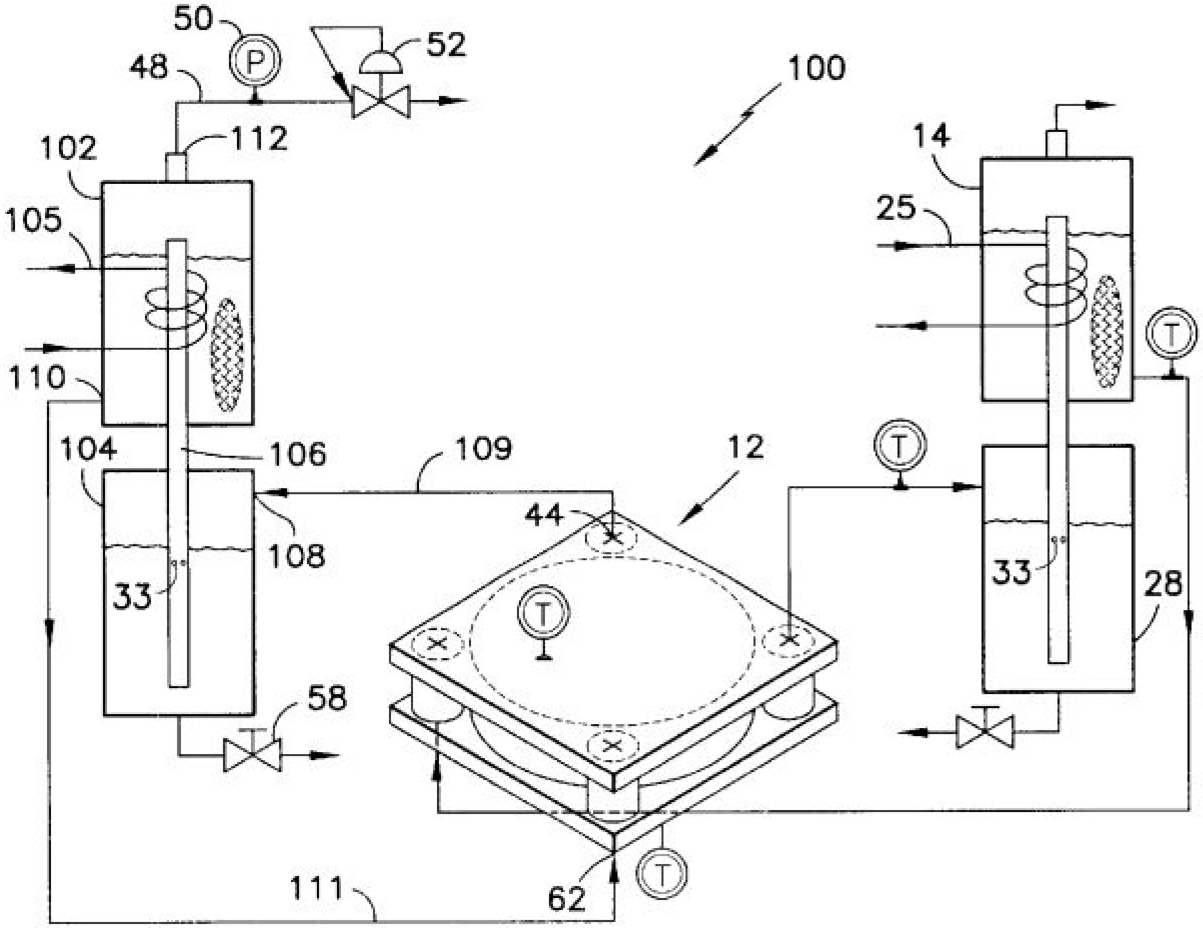

Inventors: Richard Baker, Ingo Pinnau, Zhenjie He, Karl Amo, Andre Da Costa, Ramin Daniels. Patent № 6544316 "Hydrogen gas separation using organic-vapor-resistant membranes" – 2003

A process for separating hydrogen from a multicomponent gas mixture containing hydrogen and a hydrocarbon, using gas-separation membranes selective for hydrogen over the hydrocarbon. The membranes use a selective layer made from a polymer having repeating units of a fluorinated polymer, and demonstrate good resistance to plasticization by the organic components in the gas mixture under treatment, and good recovery after exposure to liquid aromatic hydrocarbons.

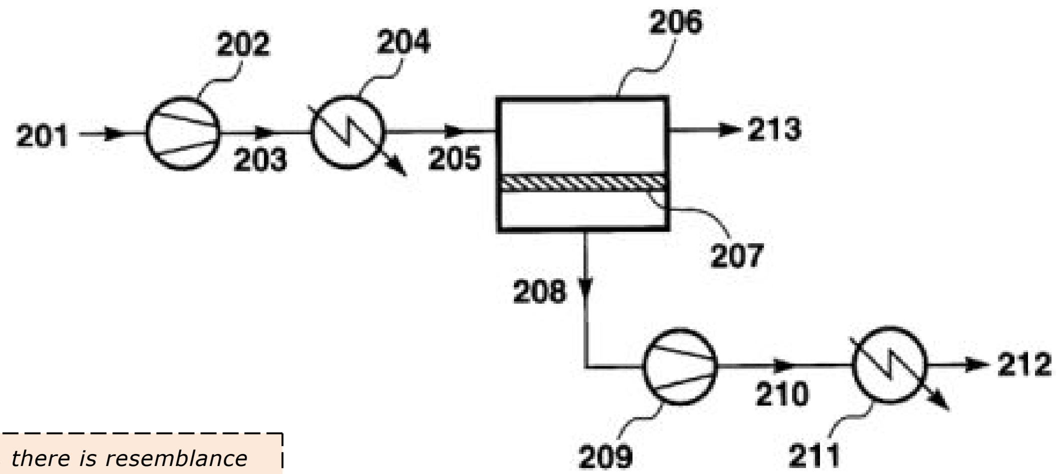

Yes, there is resemblance between these patents and Richard Baker is the common denominator

Inventor: Kaaeid Lokhandwala and Richard Baker. Patent № 6592749 "Hydrogen/hydrocarbon separation process, including PSA[146] and membranes" – 2003

An improved process for separating hydrogen from hydrocarbons. The process includes a pressure swing adsorption step, a compression/cooling step and a membrane separation step. The membrane step uses a rubbery polymeric membrane selective for all C_1—C_6 hydrocarbons over hydrogen. The process can produce three products: a high-purity hydrogen stream, an LPG[147] stream and a light hydrocarbon fuel gas stream.

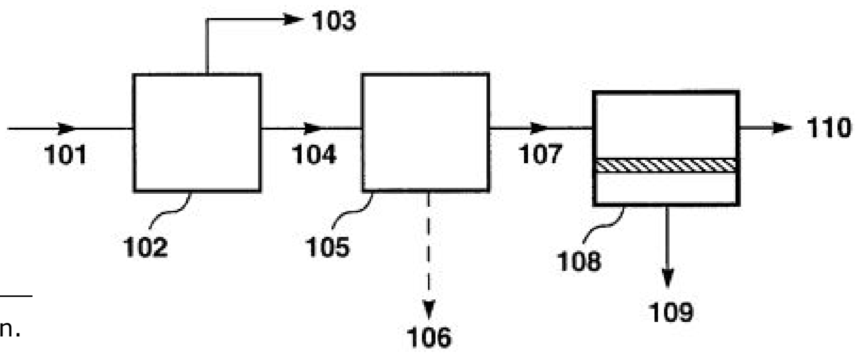

---

[146] Pressure Swing Adsorption.

[147] Low Pressure Gas.

Inventors: Wilbur Dammann and David Wallman.
Patent № 6554975 "Liquid gasification reactor" – 2003

A reactor includes a housing with an input port for liquid feedstock and an exhaust port for gas produced by a liquid gasification process. The housing includes a pressurized reaction chamber with a pair of spaced apart electrodes having inward free ends immersed in the liquid feedstock. One of the electrodes is mounted on an operable shaft, to move inward and outward relative to the other electrode.

A drive mechanism for the operable shaft is located outside the reaction chamber to selectively move the shaft. The reaction chamber is pressurized to increase efficiency of the reactor, and the chamber within which the drive mechanism is located is pressurized to substantially the same pressure as the reaction chamber.

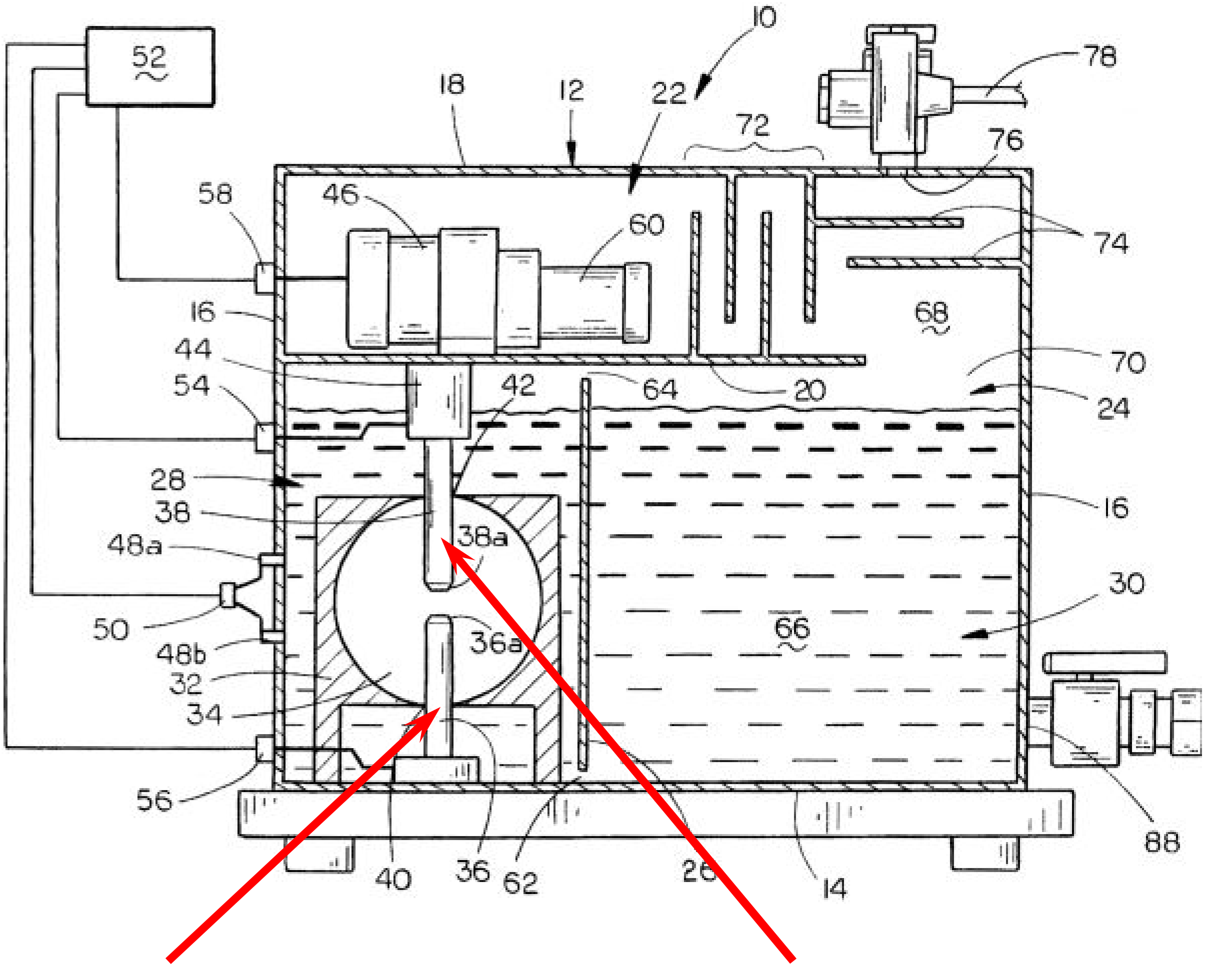

THIS ELECTRODE HAS FIXED POSITION ***THIS ELECTRODE MOVES UP AND DOWN***

ELECTRIC ARC FORMS BETWEEN THEIR TIPS 38A AND 36A
to produce (from water) hydrogen+carbon monoxide
which is a clean burning fuel for engines etc.

Inventors: Maya Rosenblum, Gilad Lavi and Gil Yigal. Patent № 6572740 "Electrolytic cell" – 2003

Improved electrolytic cells are described. The cells comprise the novel electrolyte K_2 HPO_4, or a less alkaline phosphate buffer solution, electrodes having a modified composition, or a combination of the new electrolyte and a modified composition electrode. The K_2 HPO_4 electrolyte, or less alkaline phosphate buffer solution, and modified electrodes can be used in liquid delivery devices which deliver a liquid agent at a constant rate or a controlled variable rate over a period of time.

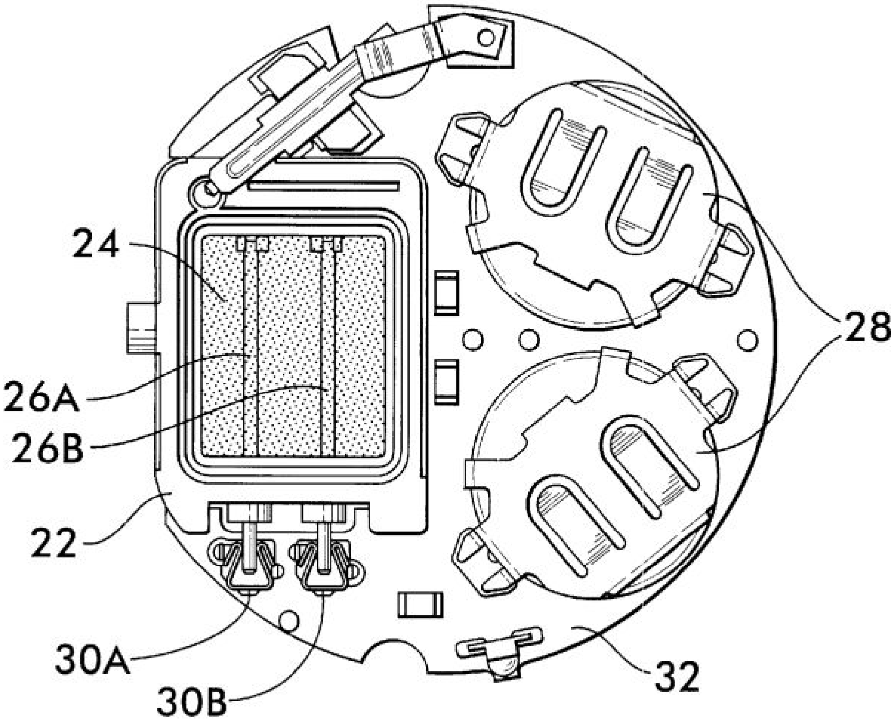

Inventor: Ruggero Maria Santilli. Patent № 6540966 "Apparatus and method for recycling contaminated liquids" – 2003. Also published as CN1446121A (China), EP1412080A1, EP1412080A4 and EP1412080B1 (Europe), WO2001094004A1 (World). Its title in Chinese is "Over-unity production of clean new energies by recycling contaminated liquid waste"

Reactors for the total recycling of contaminated liquid waste, which produce a clean burning combustible gas, usable heat, and solid precipitates. Different embodiments include the efficient recycling of automotive antifreeze and oil waste, a new method for the production of a fuel from crude oil, for desalting seawater and for recycling biologically contaminated liquid waste, such as town sewage, into a clean burning combustible gas, nutrient rich water useful for irrigation, and solid precipitates useful for fertilizers.

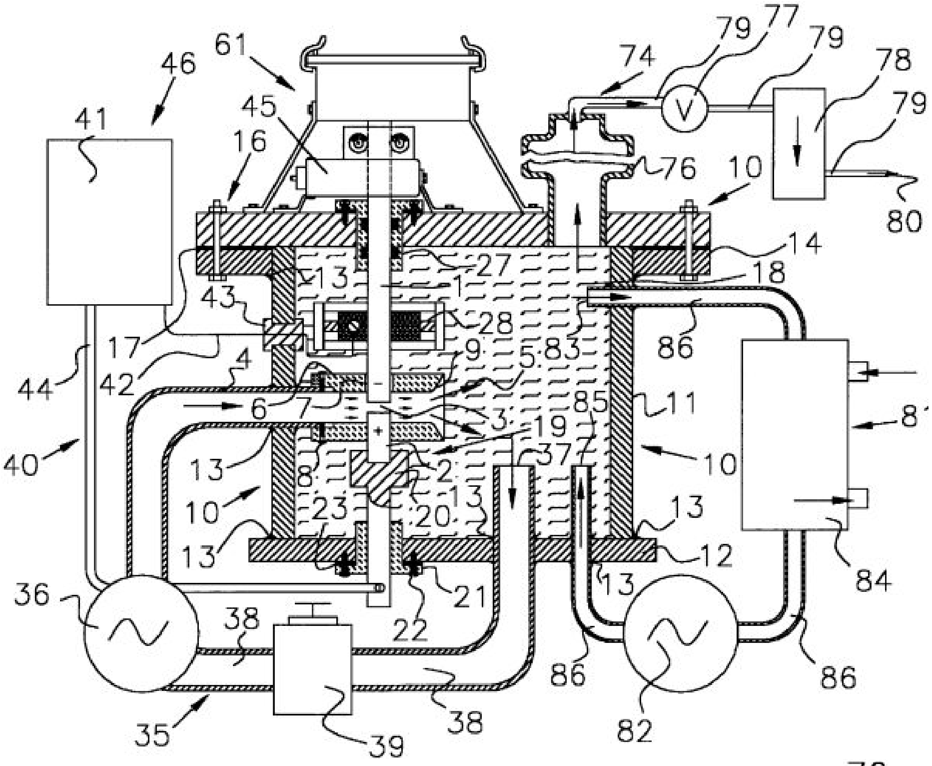
61
46
41
45
16
79
77
79
74
V
78
79
76
10
80
14
18
27
1
13
43
28
17
42
44
4
9
5
83
86
6
7
3
85
11
81
19
40
13
8
2
37
10
20
13
10
23
13
13
84
12
21
13
36
38
22
35
39
38
86
82
86

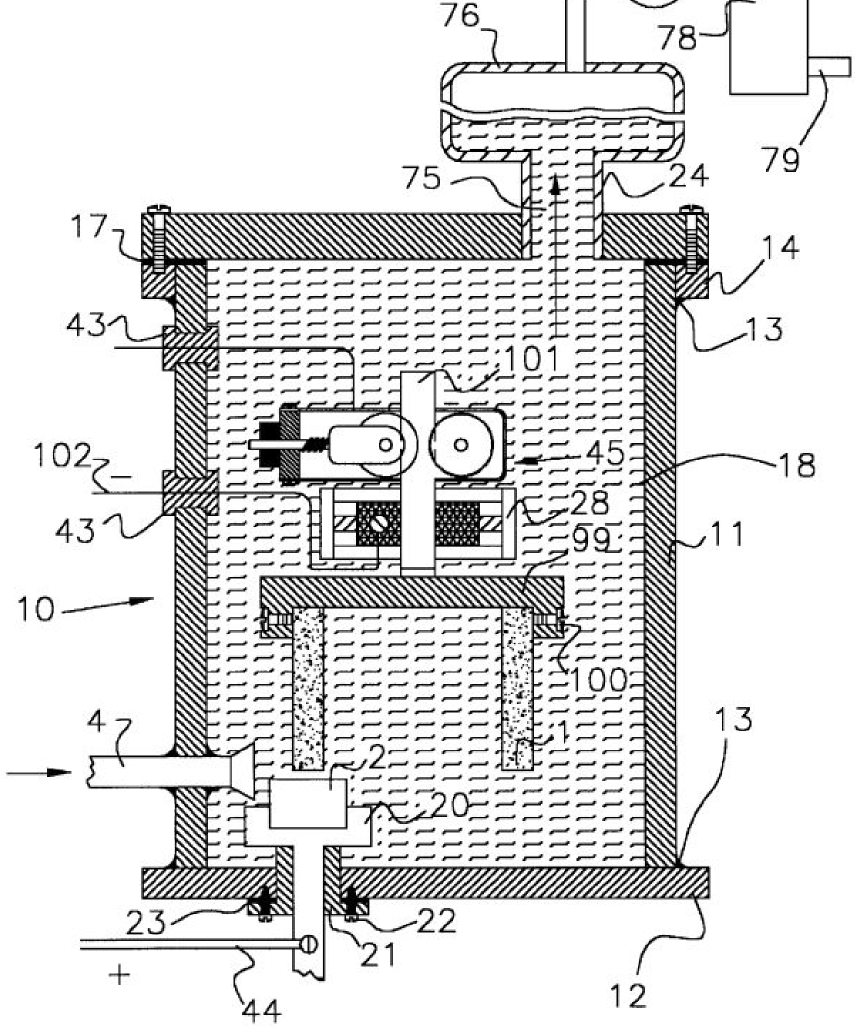
77
V
76
78
79
75
24
17
14
13
43
101
102
45
18
43
28
99
11
10
100
4
1
2
20
13
23
22
21
+
44
12

*Inventor: **Ruggero Maria Santilli**. Patent № 6663752*
"Clean burning liquid fuel produced via a self-sustaining processing of liquid feedstock" – 2003

The invention relates to a novel self-sustaining method for the clean production of a clean burning liquid fuel called ***MagneFuel***, which method is based, first, in the production of a combustible gas via submerged electric arcs between carbon-base electrodes from crude oil, oil-base, or water-base liquid waste and then passing the combustible gas via a high pressure pipe into a tower for the catalytic liquefaction, whereby the sum of the heat output in the production of the combustible gas and that for its catalytic liquefaction is sufficient for the process to be self-sustaining, that is, capable to produce its own electricity. It is emphasized that this abstract is provided to comply with the rules requiring an abstract that will allow a searcher or other reader to quickly ascertain the subject matter of the technical disclosure. It is submitted with the understanding that it will not be used to interpret or limit the scope of meaning of the claims.

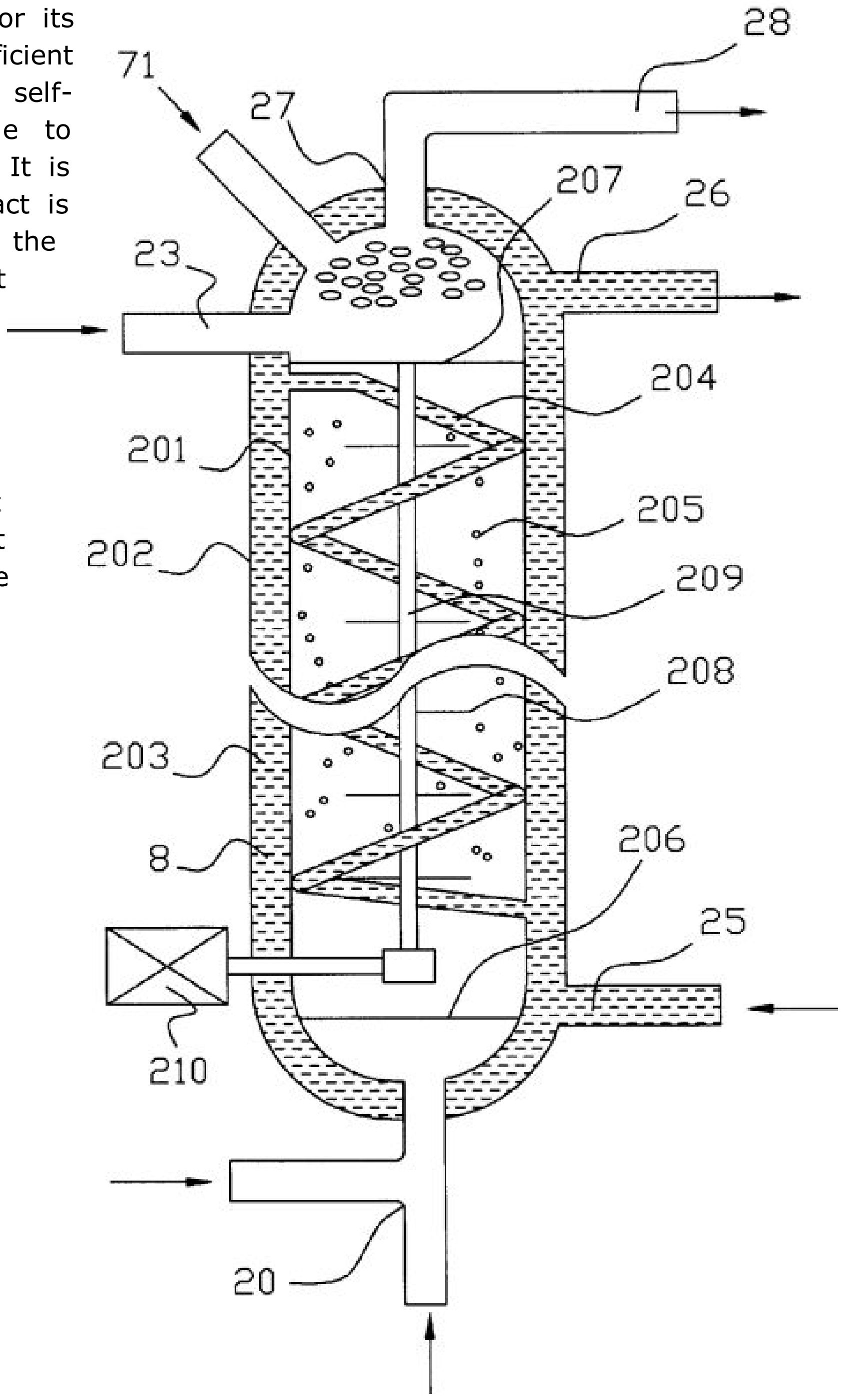

Inventors: Daniel McBride & Dominic Ciacelli. Patent № 8100092 "Hydrogen supplementation fuel apparatus and method" – 2010

A hydrogen supplementation fuel apparatus and method having a power source, a hydrogen generator and an accumulator for ***supplementing hydrogen gas to improve the fuel efficiency of internal combustion engines***. The hydrogen generator uses electrodes that are helically wound about a separator ***to increase the hydrogen generation output.***

Have you ever built a wire electrolyzer with a "tower" core in the middle and the electrodes winding around it? We've had it since 2006. Several students of mine built it with holes drilled in the core, similar to the ones shown below. (~Ozzie)

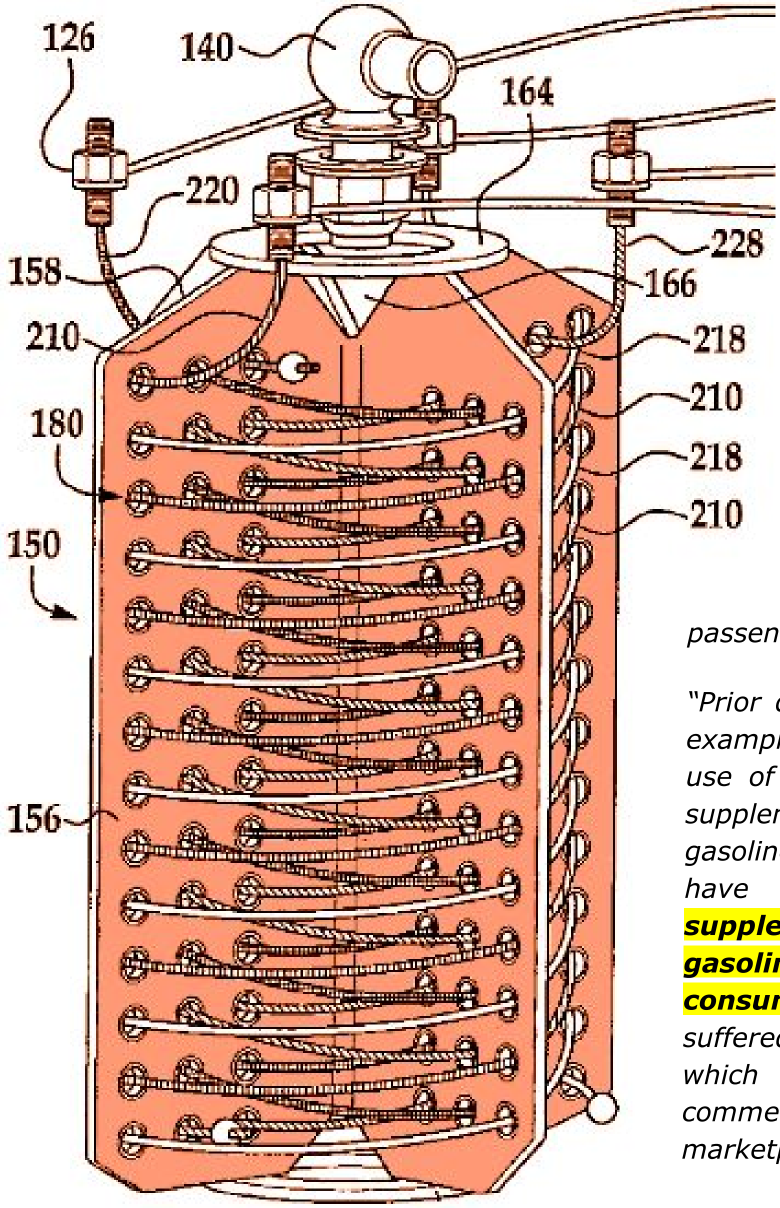

Quoting the Patent:

*"There is increased interest and momentum in the United States and abroad to find alternatives to fossil or hydrocarbon-based fuels **to reduce the dependency on oil**. This interest in past years has been particularly acute in the field of internal combustion engines in passenger and commercial vehicles."*

*"Prior devices have been proposed, for example, hybrid vehicles which combine use of gasoline and electric motors to supplement or reduce the amount of gasoline that is used. Prior systems have further proposed use of **supplementing hydrogen along with gasoline to reduce gasoline consumption.** These prior devices have suffered from many disadvantages which have limited the commercialization and acceptance in the marketplace."*

There is a need to improve on prior alternative fuel or fuel supplementation systems which efficiently reduces consumption of traditional fuels, for example gasoline, and that is economical to manufacture, use and maintain. It is a further advantage if the fuel supplementation system is ***easy to integrate into existing internal combustion engines in vehicles already on the road to take advantage of an increase in fuel economy without having to make a large investment in acquiring a new vehicle having such advantages****.*

Inventors: Fred E. McConahay; John D. Dupree; Richard Ortenheim.

Patent № 8955469 “Cylindrical hydrogen fuel generator having passive tubular cells” – 2015

A hydrogen fuel generator having a fuel cell unit having a computerized injection controller and passive conductive tubular cells that are not coupled to a power source.

A method and system of a supplementary fuel system for delivering hydrogen to an engine is described. The embodiments described herein include hydrogen fuel generator, also referred to as an electrolyzer that is designed to be simple, compact and to produce HHO gas. ***HHO gas is being produced in order to “boost” the vehicle or generator by improving miles per gallon (MPG) performance, improving the burn quality of the fuel, thus reducing any unwanted emissions, and producing more power and to clean out old carbon deposits inside the engine*****.**

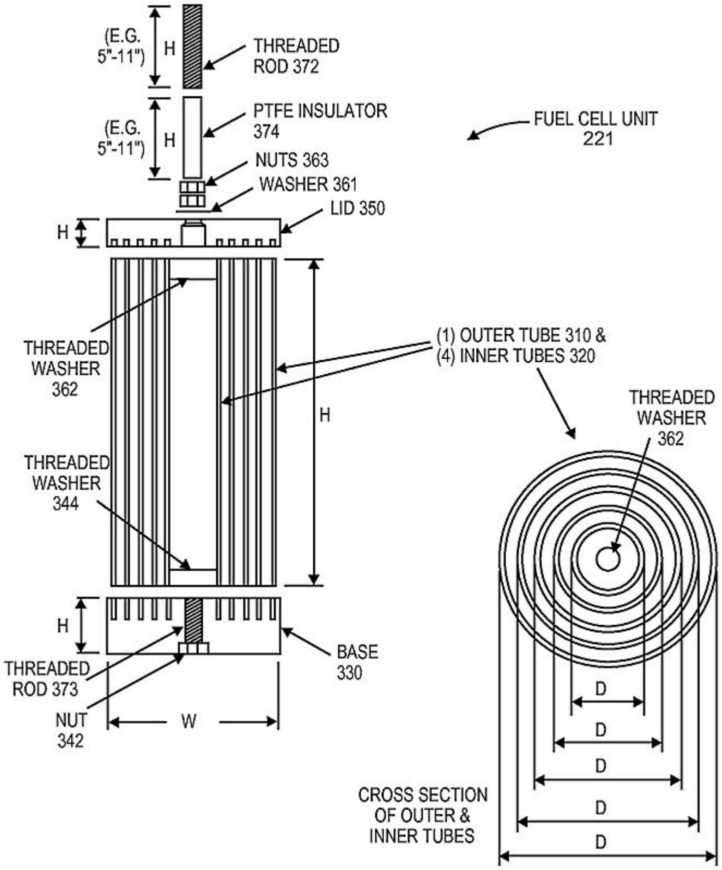

The supplementary fuel system adds the HHO gas to the air entering the engine. In one embodiment, the supplementary fuel system can be integrated to work with existing engines, and may leverage some of the existing components associated with the engine. In another embodiment, the supplement fuel system can be integrated along with another type of fuel system when initially manufactured or assembled. In addition, the embodiments describe ***an on-demand system that generates hydrogen gas on demand, instead of storing the hydrogen gas.***

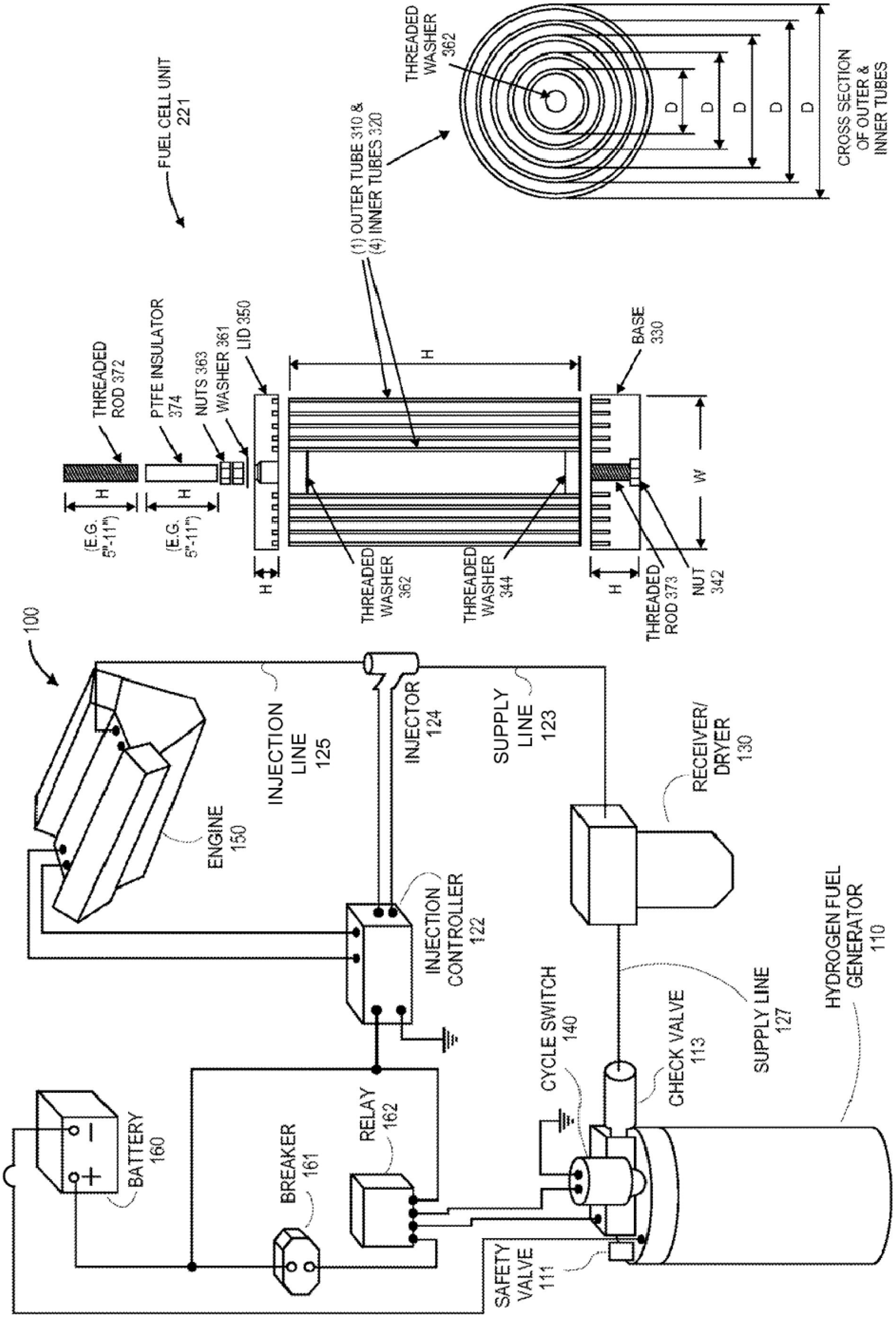
FUEL CELL UNIT 221
THREADED ROD 372
PTFE INSULATOR 374
NUTS 363
WASHER 361
LID 350
(E.G. 5"-11")
H
(1) OUTER TUBE 310 & (4) INNER TUBES 320
THREADED WASHER 362
D
CROSS SECTION OF OUTER & INNER TUBES
W
BASE 330
THREADED WASHER 362
THREADED WASHER 344
THREADED ROD 373
NUT 342
100
ENGINE 150
INJECTION LINE 125
INJECTOR 124
SUPPLY LINE 123
RECEIVER/ DRYER 130
INJECTION CONTROLLER 122
HYDROGEN FUEL GENERATOR 110
SUPPLY LINE 127
CHECK VALVE 113
CYCLE SWITCH 140
RELAY 162
BREAKER 161
BATTERY 160
SAFETY VALVE 111
−
+

General Waterfuel Patents

Inventor: Patrick Lee Underwood. Patent № 3862624-A
"Oxygen-hydrogen fuel use for combustion engines" – 1975

A combustion engine which uses in **combination oxygen and an excess of hydrogen as fuel** has a substantially closed exhaust system which recirculates the gaseous part of the exhaust through the engine and ***expels only water***. Hot engine exhaust is cooled by heat exchange contact with supplies of oxygen and hydrogen and the oxygen and hydrogen are simultaneously warmed by the exchange of heat. A trap separates water from the excess hydrogen, and the excess hydrogen and blowby exhaust from the engine are mixed with fresh supplies of oxygen and hydrogen before the mixture is injected into the engine for combustion.

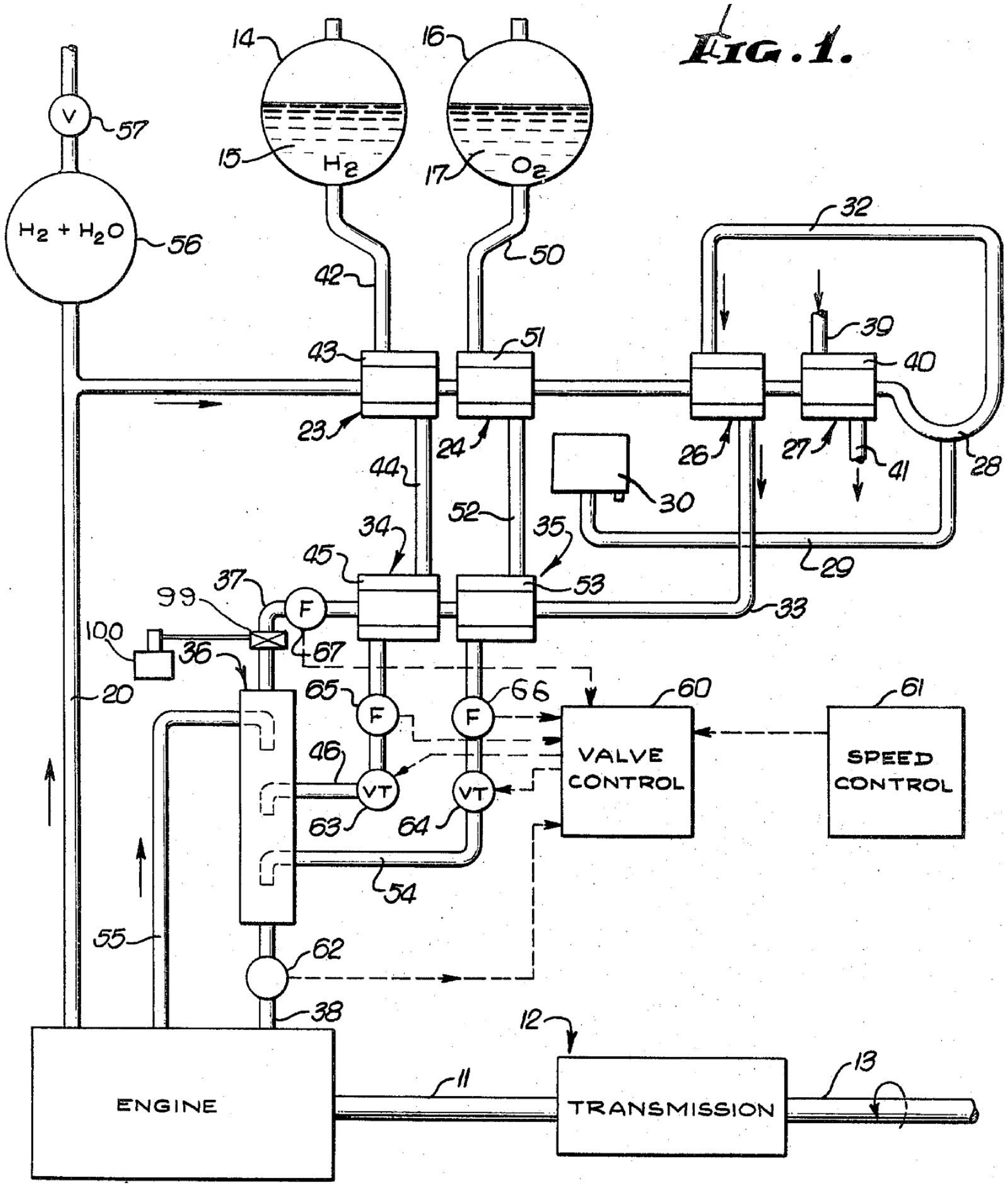

FIG. 1.

Inventor: Stephen Horvath. Patent № 3980053 "Fuel supply apparatus for internal combustion engines" – 1976

A fuel supply apparatus generates hydrogen and oxygen by electrolysis of water. There is provided an electrolytic cell, which has a circular anode surrounded by a cathode with a porous membrane therebetween. The anode is fluted and the cathode is slotted to provide anode and cathode areas of substantially equal surface area. A pulsed electrical current is provided between the anode and cathode for efficient generation of hydrogen and oxygen. The electrolytic cell is equipped with a float, which detects the level of electrolyte within the cell, and water is added to the cell as needed to replace the water lost through the electrolysis process. The hydrogen and oxygen are collected in chambers, which are an integral part of the electrolytic cell, and these two gases are supplied to a mixing chamber where they are mixed in the ratio of two parts hydrogen to one part oxygen. This mixture of hydrogen and oxygen flows to another mixing chamber wherein it is mixed with air from the atmosphere. The system is disclosed as being installed in an automobile, and a dual control system, which is actuated by the automobile throttle, first meters the hydrogen and oxygen mixture into the chamber wherein it is combined with air and then meters the combined mixture into the automobile engine. The heat of combustion of a pure hydrogen and oxygen mixture is greater than that of a gasoline and air mixture of comparable volume, and air is therefore mixed with the hydrogen and oxygen to produce a composite mixture, which has a heat of combustion approximating that of a normal gas-air mixture. This composite mixture of air, hydrogen and oxygen then can be supplied directly to a conventional internal combustion engine without overheating and without creation of a vacuum in the system.

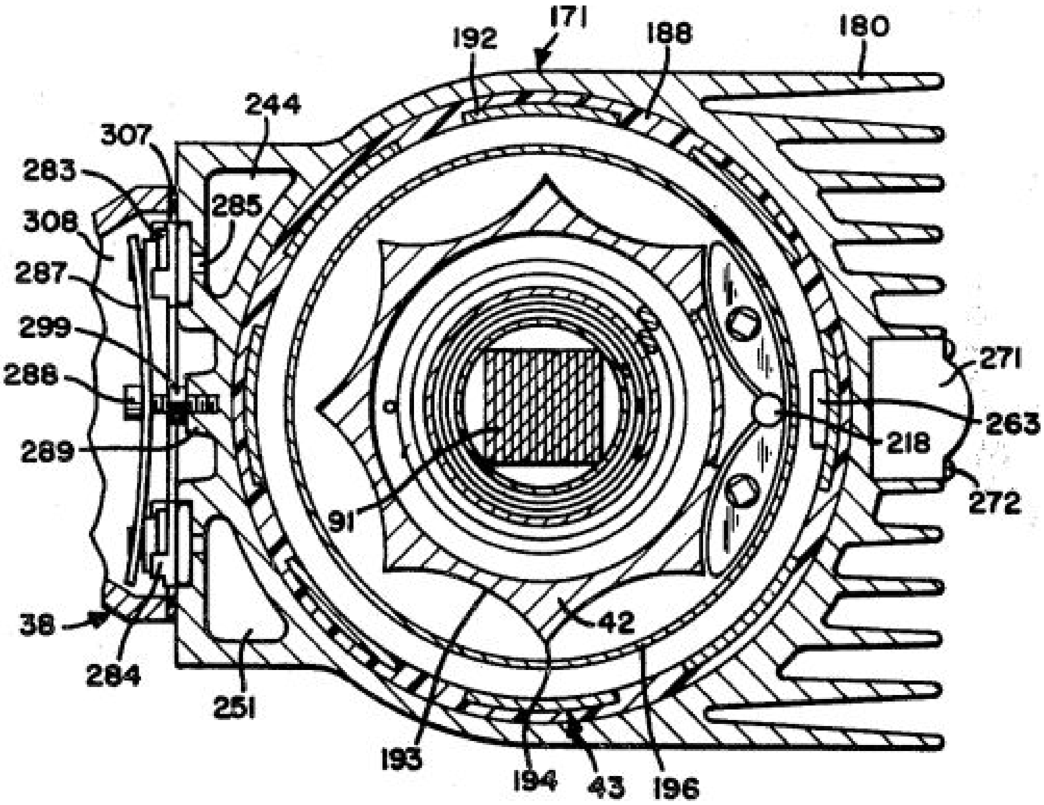

Inventor: Dufour; Patrick. Patent № 4031865 "Hydrogen-oxygen fuel cell for use with internal combustion engines" — 1977

A **fuel cell** for generating a hydrogen and oxygen gas utilizing a water electrolyte and a catalyst selected from the group consisting of sodium hydroxide and potassium carbonate. The **fuel cell** includes a pair of electrodes connected in circuit with an electrical power supply and an outlet for directing the generated hydrogen and oxygen to a drier where it is dried and mixed to form a combustible fuel mixture. The fuel mixture is then directed in accordance to engine demand to the intake manifold of an internal combustion engine as a fuel supplement.

> ***Note the use of* 'fuel cell' *to denote what is obviously our common electrolyzer! That makes it official, then. I still think we should stick to 'electrolyzer' to prevent confusion with the regular definition of 'fuel cell' – usually denotes an apparatus that converts electricity into hydrogen rather than the other way around. (~Ozzie)***

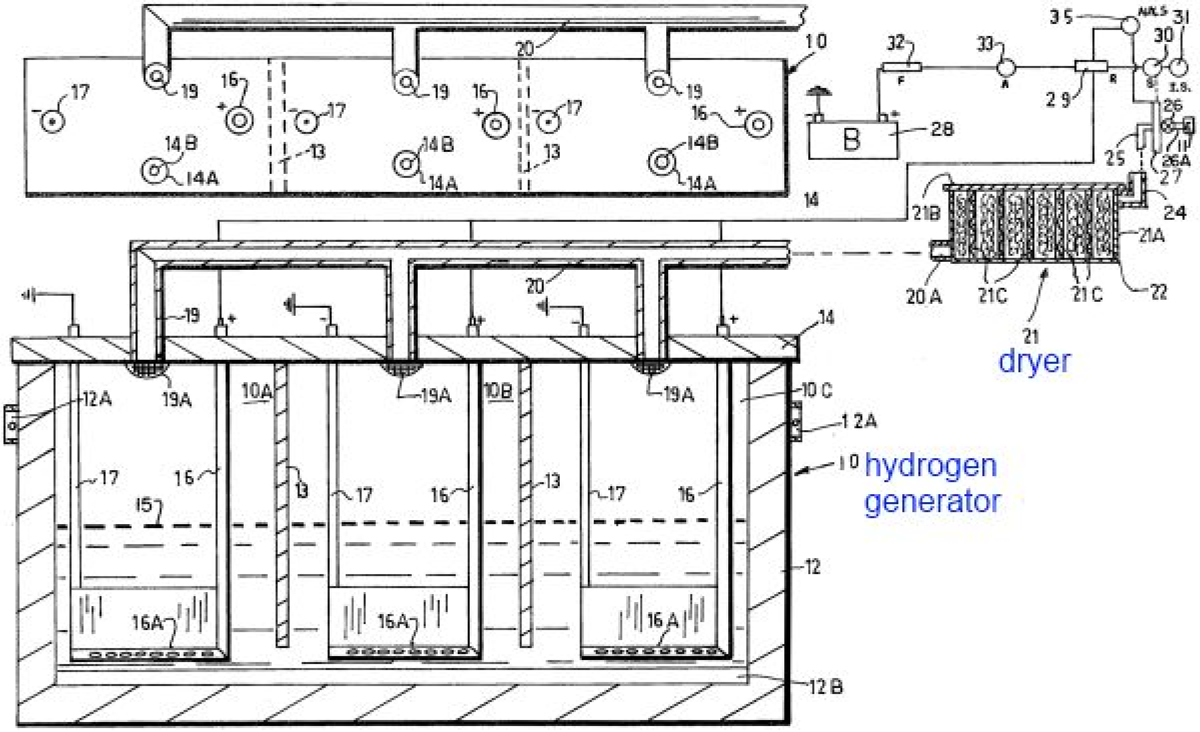

Inventors: Cledith Sanders, Margaret Sanders & Cledith Sanders II. Patent № 4369737 "Hydrogen-oxygen generator" – 1983

A cell for generating hydrogen and oxygen comprised of a plastic housing and a plurality of regularly spaced metallic electrode rods positioned substantially parallel to the bottom of the housing; an aqueous solution of sodium bi-sulfate in which the rods are immersed; half of the rods being positive and attached to a source of D.C. electricity and the other half of the rods being negative and attached to a ground connection; the rods being positioned alternately such that each positive rod is adjacent solely to negative rods and each negative rod is adjacent solely to positive rods. ***This cell finds particular use as a fuel generator for internal combustion engines.***

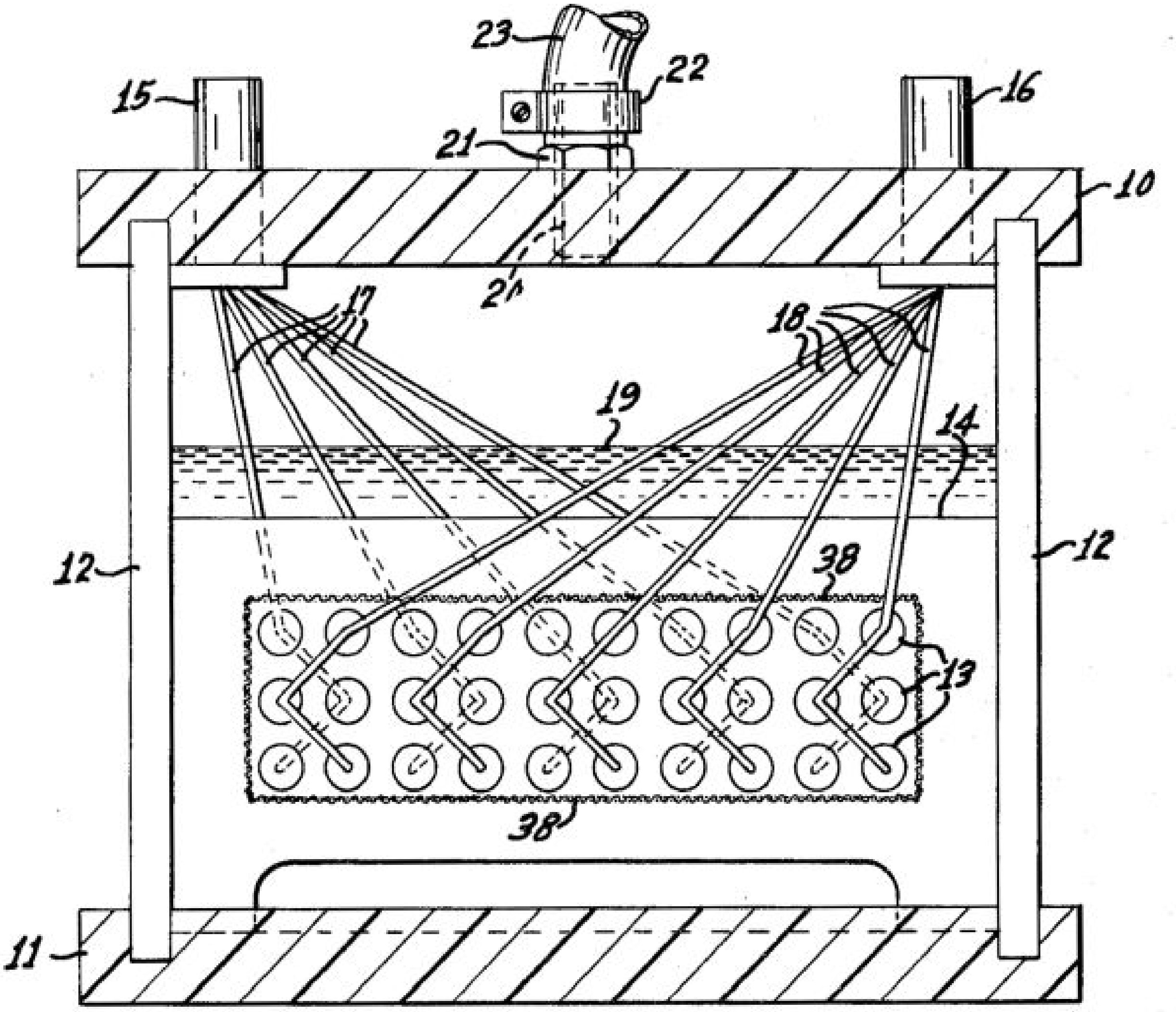

Inventor: Glenn Shelton. Patent № 4573435 "Apparatus and method for generating hydrogen gas for use as a fuel additive in Diesel engines" – 1986

Water is sprayed onto the surface of a bank of conduits or tubes extending through a heat exchange compartment, which conduits carry the hot exhaust gases from a Diesel engine at a temperature of approximately 950°–1100°F. The water is sprayed at such a rate that a substantial portion of the water is reformed into a mixture of hydrogen and oxygen gas and steam. The hydrogen is then mixed with air to form hydrogen enriched air which is introduced into the combustion chamber. When the hydrogen enriched air is compressed, the Diesel fuel is introduced with a resulting improvement in fuel efficiency and maximized combustion of the fuel.

The water is delivered to the hydrogen generator responsive to the activation of the accelerator pedal at a controlled rate in which the percentage of water to Diesel fuel is substantially in the range of 5% to 10%. Air from the engine turbo-supercharger is delivered to the hydrogen generator to pick up and carry the hydrogen gas back to the air intake of the engine. ***Both the Diesel fuel and water may be preheated to maximize results.***

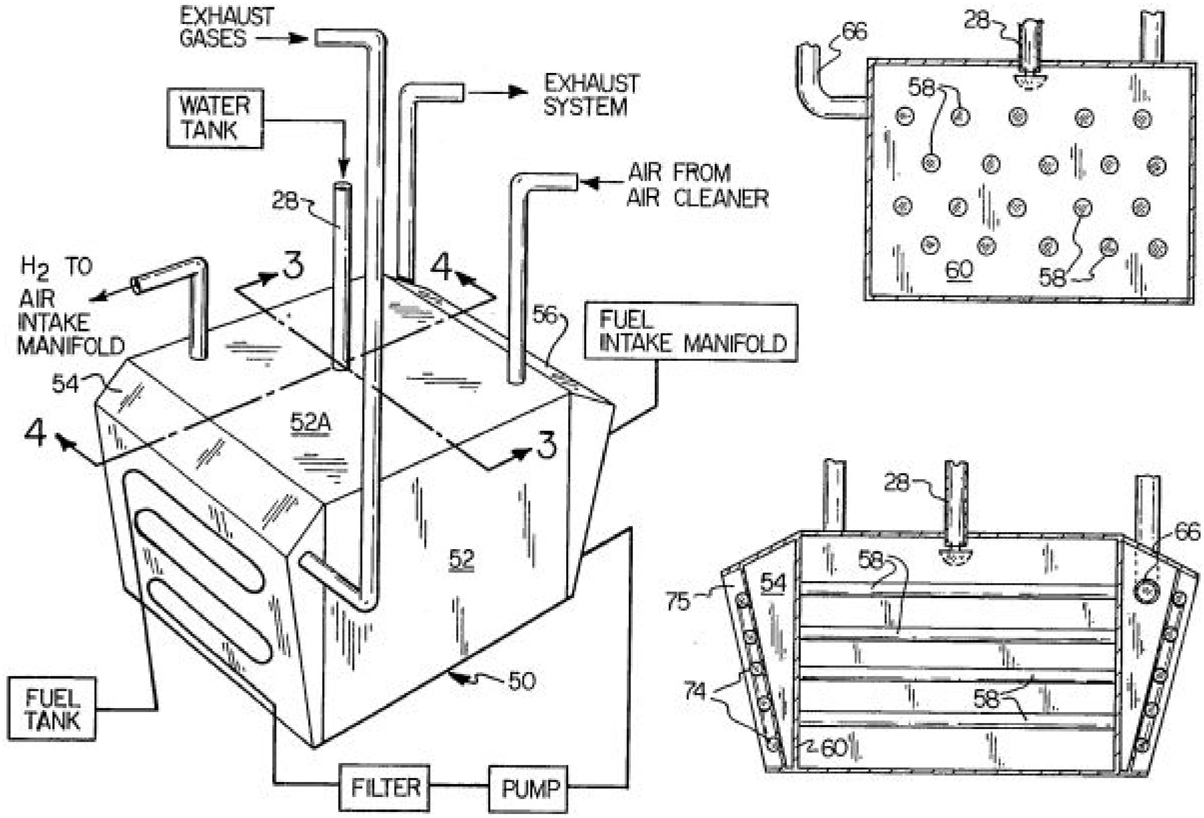

Inventor: Howard Bidwell. Patent № 4774810 "Method of and apparatus for improving the efficiency of internal combustion engines" – 1988. Also see Patent № 4773981 – 1988.

An arrangement of interrelated automatically responsive accessories for an Otto type internal combustion engine wherein an exhaust driven turbine rotor housing is directly connected to the engine exhaust manifold outlet, with the full exhaust flame kinetic energies impinging with full maximum velocity-thrust force against the turbine rotor vaning[148], at a flow rate variously intensified by the volumes of oxygen and hydrogen gases being fed to the engine intake in accordance to engine speed and load conditions may determine.

---

[148] Fanning

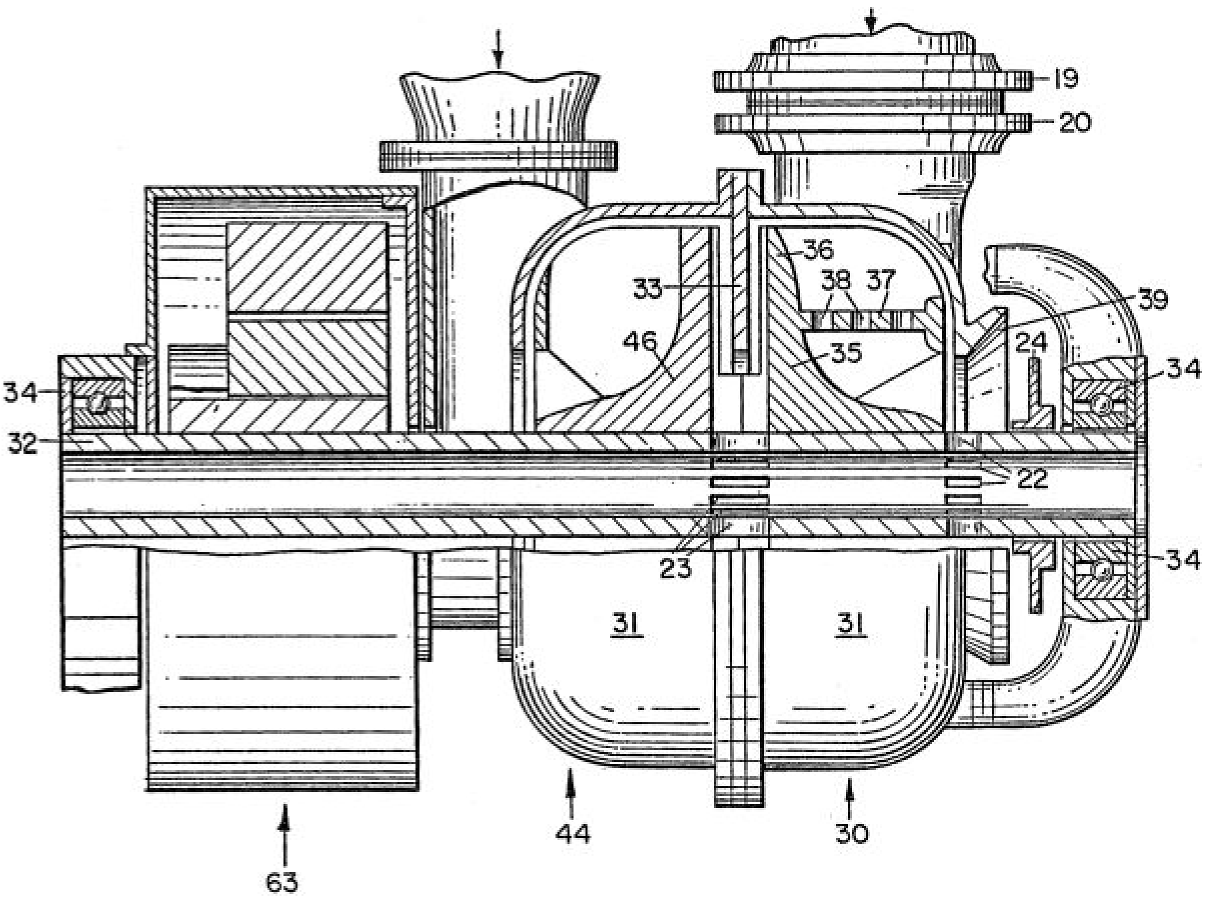

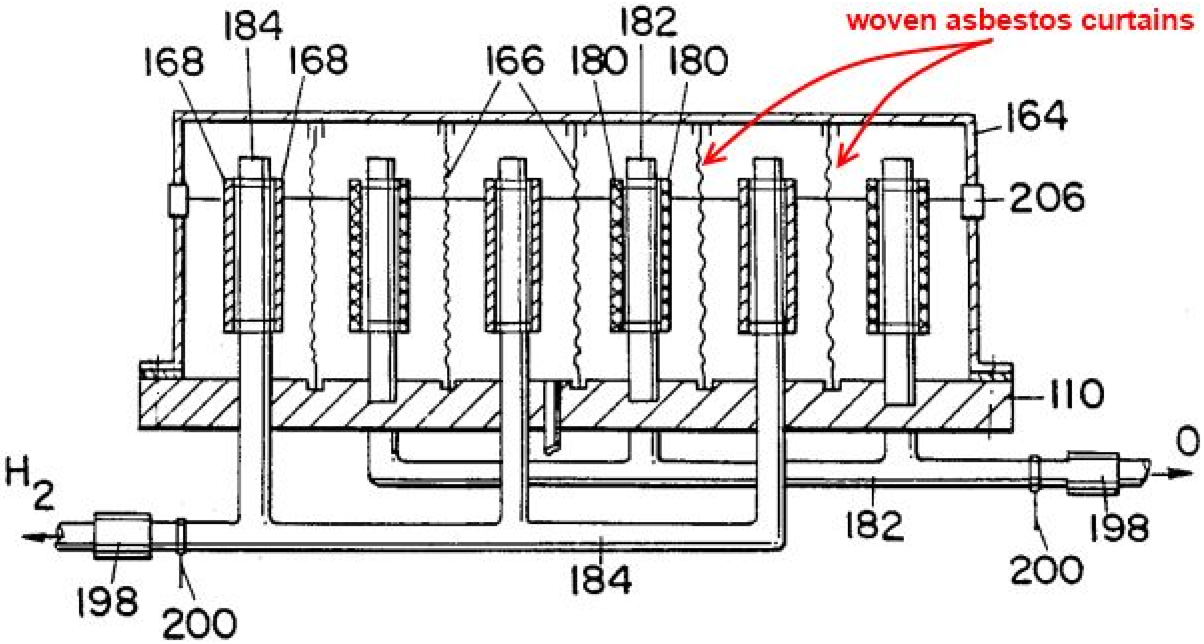
woven asbestos curtains

Inventor: John Cunningham. Patent № 5450822 "Apparatus and method for electrolysis to enhance combustion in an internal combustion engine" – 1995

The present invention 10 comprises a hollow main canister 12 having a plurality of conductive plates 19 interposed therein each acting as both an anode and a cathode when electrolysis of an electrolytic fluid, such as potassium hydroxide, occurs in the main canister. The electrolysis reaction is powered by a current source 24 normally attached to an electrode 14 interposed in the main canister 12 seeking the grounded walls of the main canister 11. The current can also be attached to the walls of the main canister and the electrode 14 grounded. The voltage is divided between the conductive plates 19 in this circuit. The produced ionized hydrogen and oxygen from the electrolytic reaction is directed through the main canister to the combustion situs [location] 23 of an internal combustion engine fuel/air mixture system through the use of a delivery fitting 21 and a delivery tube 22.

The hydrogen and oxygen interposed within the combustion situs enhances combustion and the cleanliness of the same thereby producing a cleaner and more efficient fuel burn.

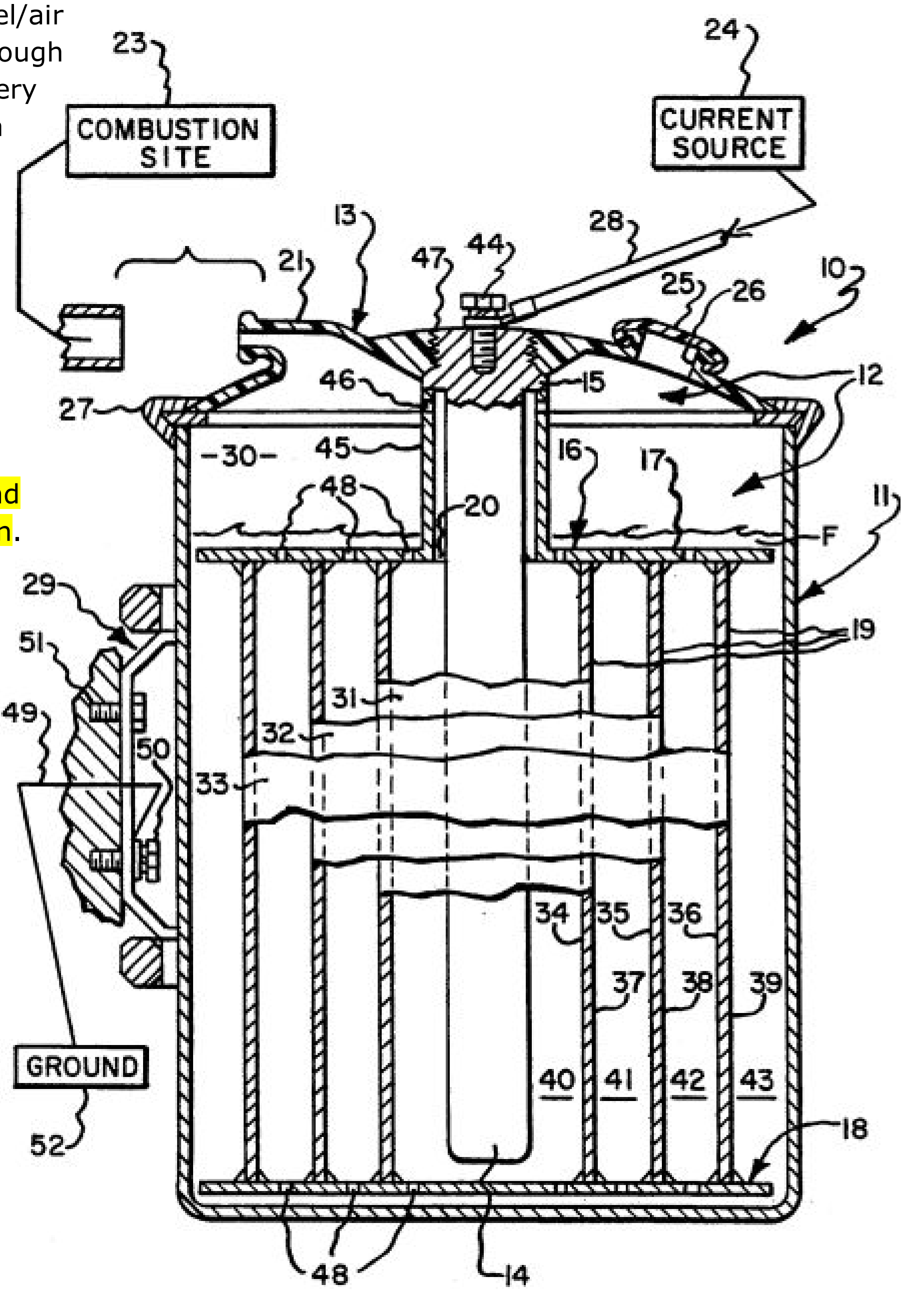

Inventor: Paul Pantone. Patent № 5794601 “Fuel pretreater apparatus and method” – 1998

> ***Neither hydrogen nor electrolysis. This is a “PURE WATERFUEL” invention. The color diagram on next page – courtesy of Jean-Louis Naudin. Commercial products have become popular in EUROPE especially for farming and off-road use. (~Ozzie)***

A novel **fuel pretreater** apparatus and method for pretreating an alternate fuel to render it usable as the fuel source for fuel burning equipment such as internal combustion engines, furnaces, boilers, and turbines, includes a volatilization chamber into which the alternate fuel is received. An exhaust plenum may enclose the volatilization chamber so that thermal energy supplied by exhaust from the fuel burning equipment can be used to help volatilize the alternate fuel. A bypass stream of exhaust may be diverted through the alternate fuel in the volatilization chamber to help in volatilizing the alternate fuel and help ***carry the volatilized fuel through a heated reactor*** prior to its being introduced into the fuel burning equipment. The reactor is preferably interposed in the exhaust conduit and is formed by a reactor tube having a reactor rod mounted coaxially therein in spaced relationship. The exhaust passing through the exhaust conduit provides thermal energy to the reactor to pretreat the alternate fuel.

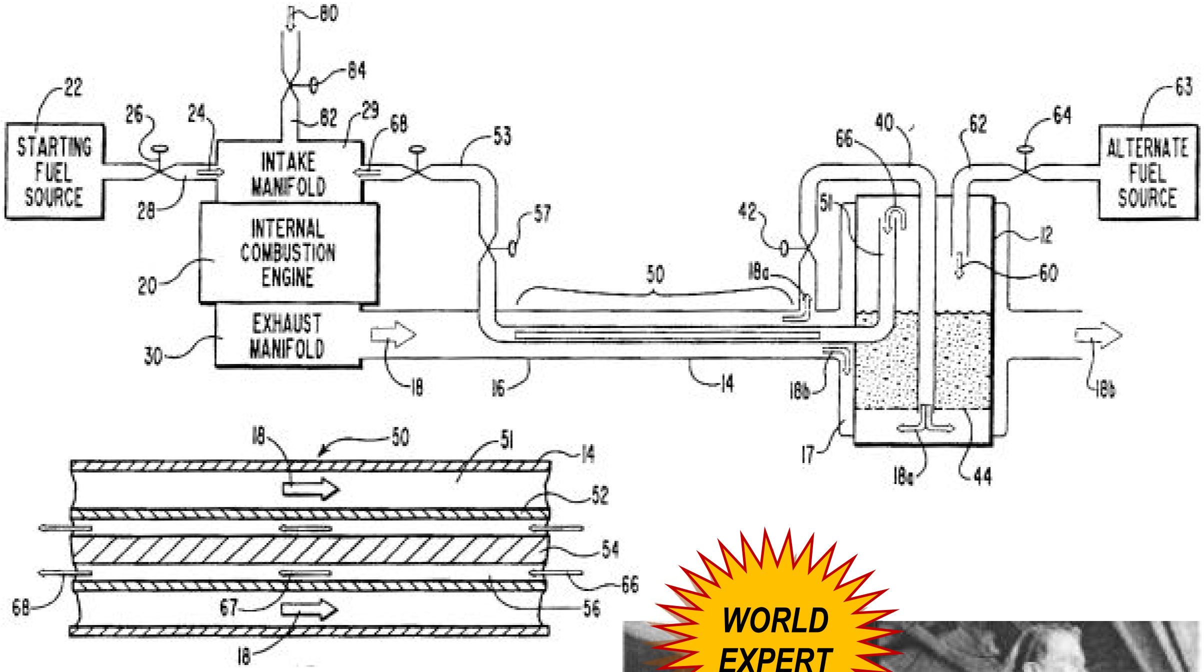

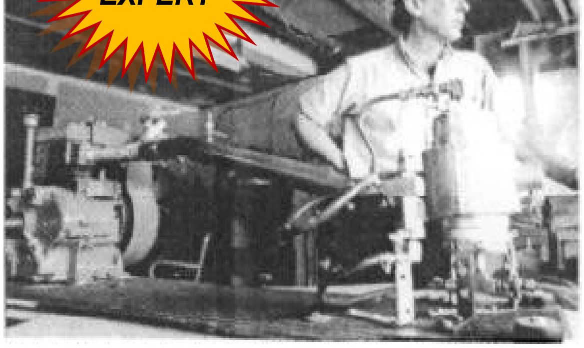

Paul Pantone (1950-2015) with an early prototype. Source: http://www.teslatech.info

More info: see Chapter 30

Inventor: Frederick George Best. Patent № 5924287
"Domestic energy supply system" – 1999

An energy supply system, which utilizes a vaporizing chamber containing a vaporizable liquid. A heat source is supplied to vaporize the liquid, which drives an engine to produce mechanical energy. A condenser is connected to the engine to condense the vapor back to a liquid, which is then fed back to the vaporizing chamber. The mechanical energy is used to supply usable electrical energy and to power an electrolysis plant, which separates water into its constituent parts. The constituent parts are stored for subsequent energy-creating recombination in an electricity-producing fuel cell and/or a heat energy-producing underwater burner. The heat energy produced by the underwater burner is used to heat a water supply surrounding the burner.

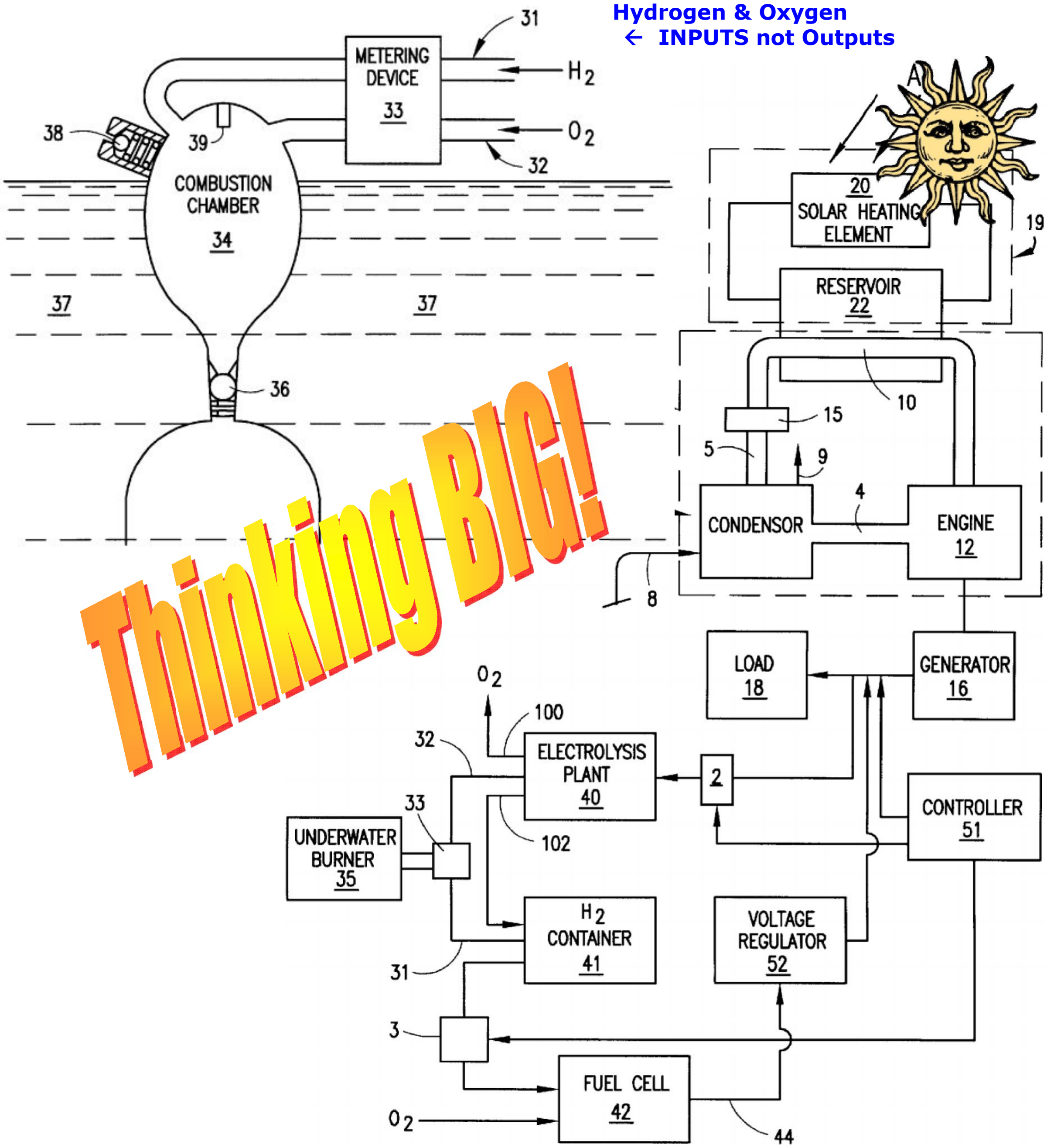

Hydrogen & Oxygen
← INPUTS not Outputs

Thinking BIG!

Inventors: Mario De Souza and Gabi Balan. Patent № 6332434

"Hydrogen generating apparatus and components therefor" – 2001

A hydrogen generating system is provided for use in internal combustion engines for increasing the efficiency of the engine and decreasing emissions from the engine. The hydrogen generating system has an electrolysis cell for generating hydrogen and oxygen gases by electrolysis of an aqueous solution, a power source for providing electrical power to the electrolysis cell, an outlet flow means for introducing the generated gases into the intake manifold system of an internal combustion engine, a monitoring means for monitoring the operating conditions of the hydrogen generating system, and a control means connected to the monitoring means for controlling the operation of the hydrogen generating system in response to the monitoring means. The invention is also directed to a ***controller*** for controlling a hydrogen generating system for use in an internal combustion engine ***for increasing the efficiency of the engine and decreasing emissions from the engine.*** The controller has at least one interface means for receiving information on the operating conditions of the hydrogen generating system, at least one control means for controlling a parameter of the hydrogen generating system, and a logic circuit connected to the interface means and control means for providing instructions to the control means in response to the information received from the interface means.

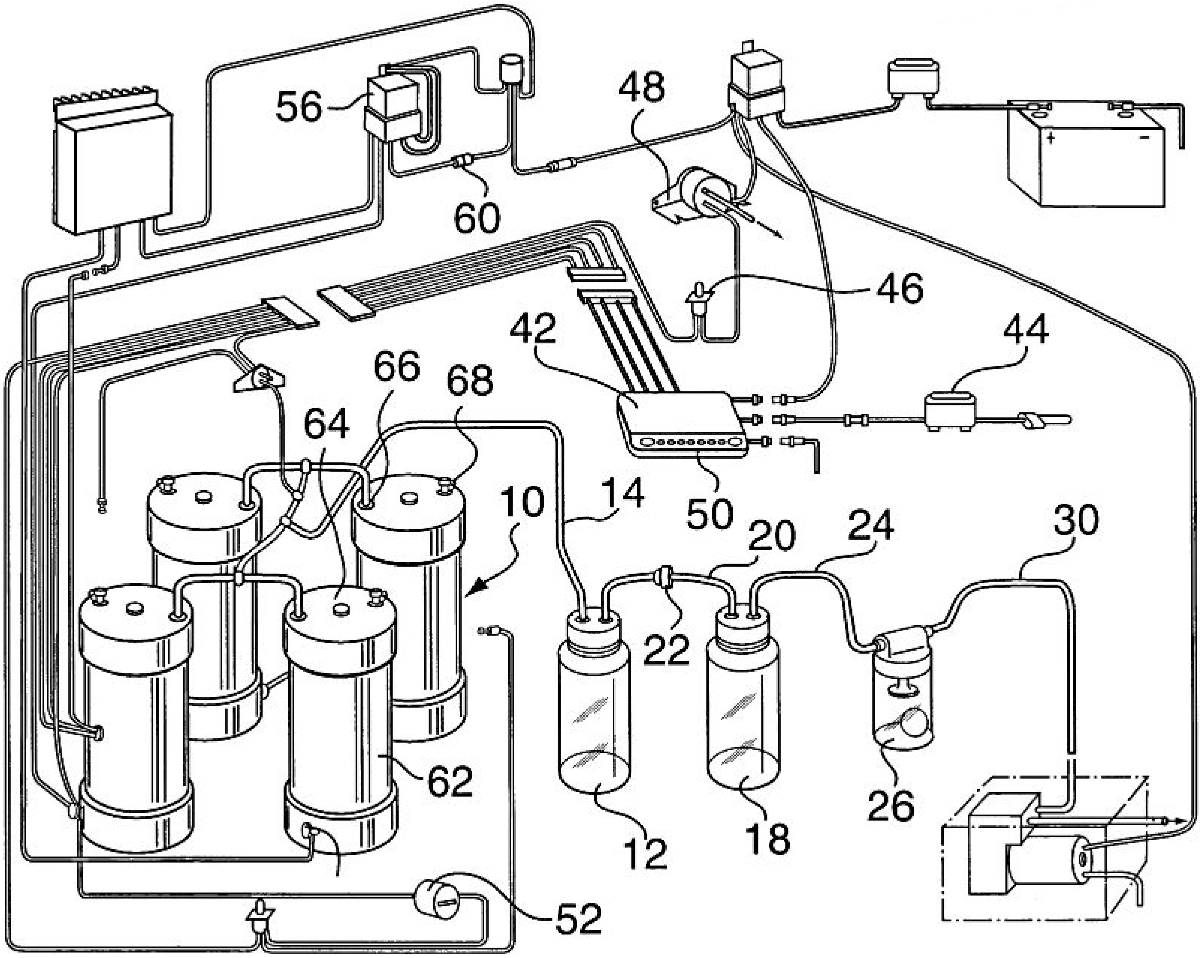

Inventors: Edward Mosher and John Webster. Patent № 6257175 "Oxygen and hydrogen generator apparatus for internal combustion engines" – 2001

Hydrogen and oxygen gases are generated for use in an internal combustion engine in a vehicle using the electrical system of the vehicle to provide current for the electrolysis process to generate the hydrogen and oxygen gases. The electrolysis process to eliminate oxygen and hydrogen gases occurs ***only while the engine is being operated*** and terminates when the engine stops. The ***hydrogen and oxygen gases are collected separately*** in the generator apparatus and flow separately in their own conduits to the intake manifold of the engine.

{And why so? ~Ozzie}

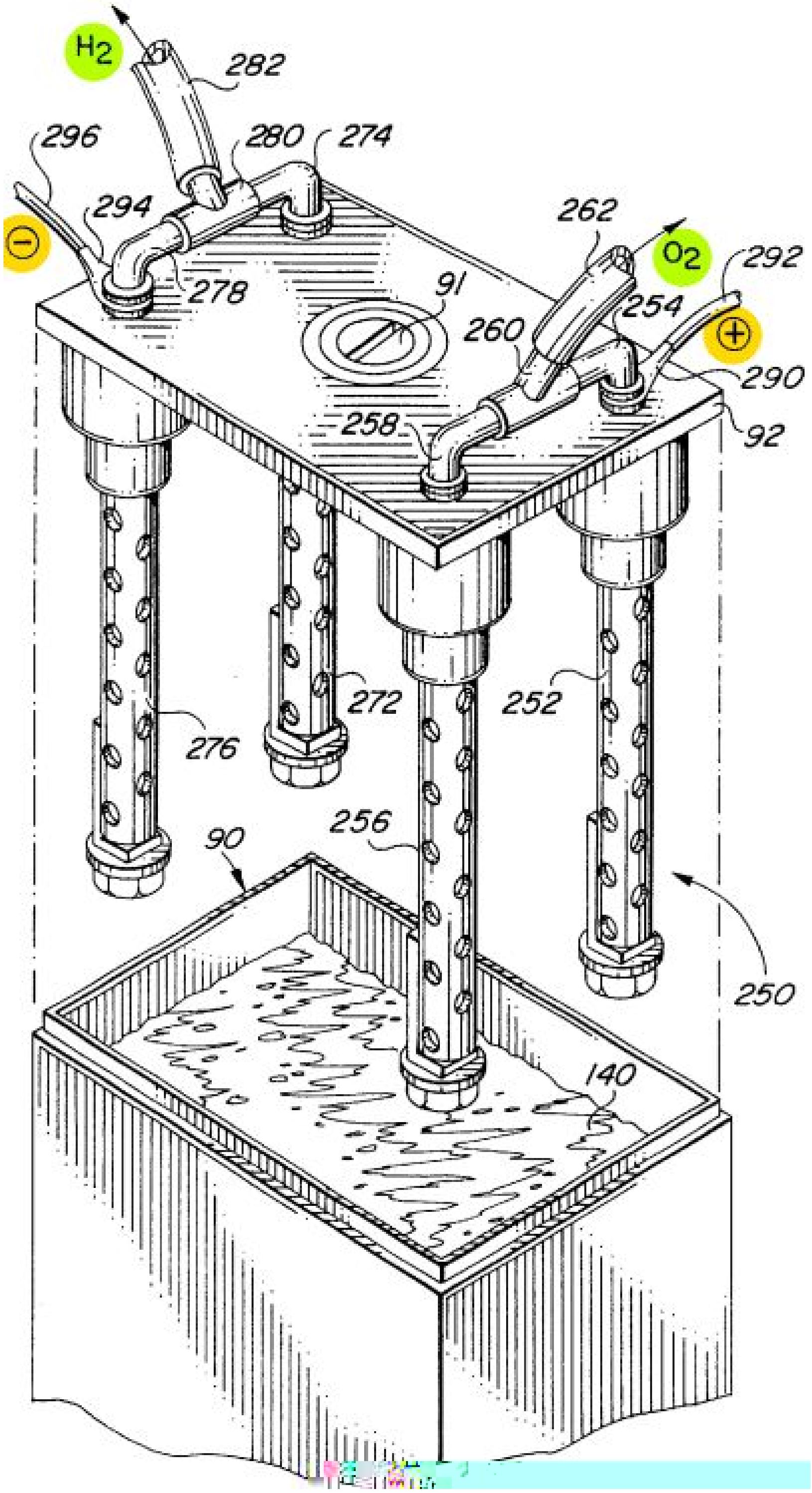

Water in the generator apparatus is replenished from a reservoir as the water is used, and the water is accordingly kept at a desired level in the generator apparatus.

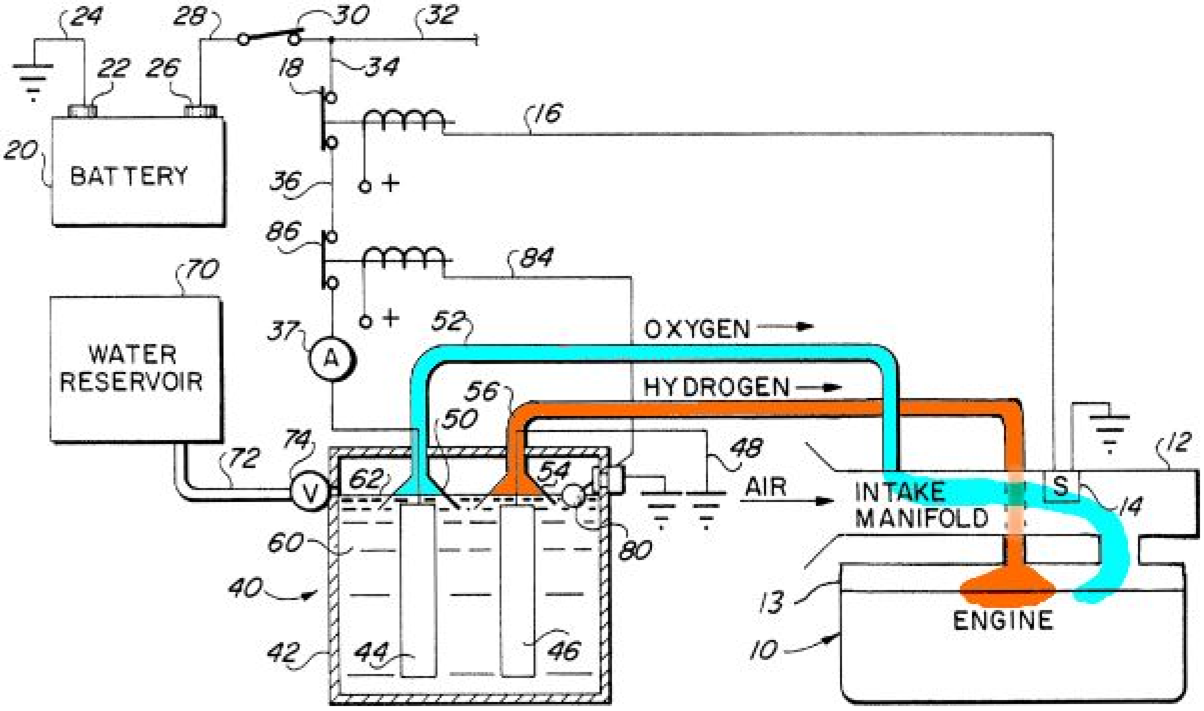

Inventors: Mario De Souza & Gabi Balan.
Patent № 6336430 "Hydrogen generating apparatus" – 2002

A hydrogen generating system is provided for use in internal combustion engines for increasing the efficiency of the engine and decreasing emissions from the engine. The hydrogen generating system has an electrolysis cell for generating hydrogen and oxygen gases by electrolysis of an aqueous solution, a power source for providing electrical power to the electrolysis cell, an outlet flow means for introducing the generated gases into the intake manifold system of an internal combustion engine, a monitoring means for monitoring the operating conditions of the hydrogen generating system, and a control means connected to the monitoring means for controlling the operation of the hydrogen generating system in response to the monitoring means. The invention is also directed to a controller for controlling a hydrogen generating system for use in an internal combustion engine for increasing the efficiency of the engine and decreasing emissions from the engine. The controller has at least one interface means for receiving information on the operating conditions of the hydrogen generating system, at least one control means for controlling a parameter of the hydrogen generating system, and a logic circuit connected to the interface means and control means for providing instructions to the control means in response to the information received from the interface means.

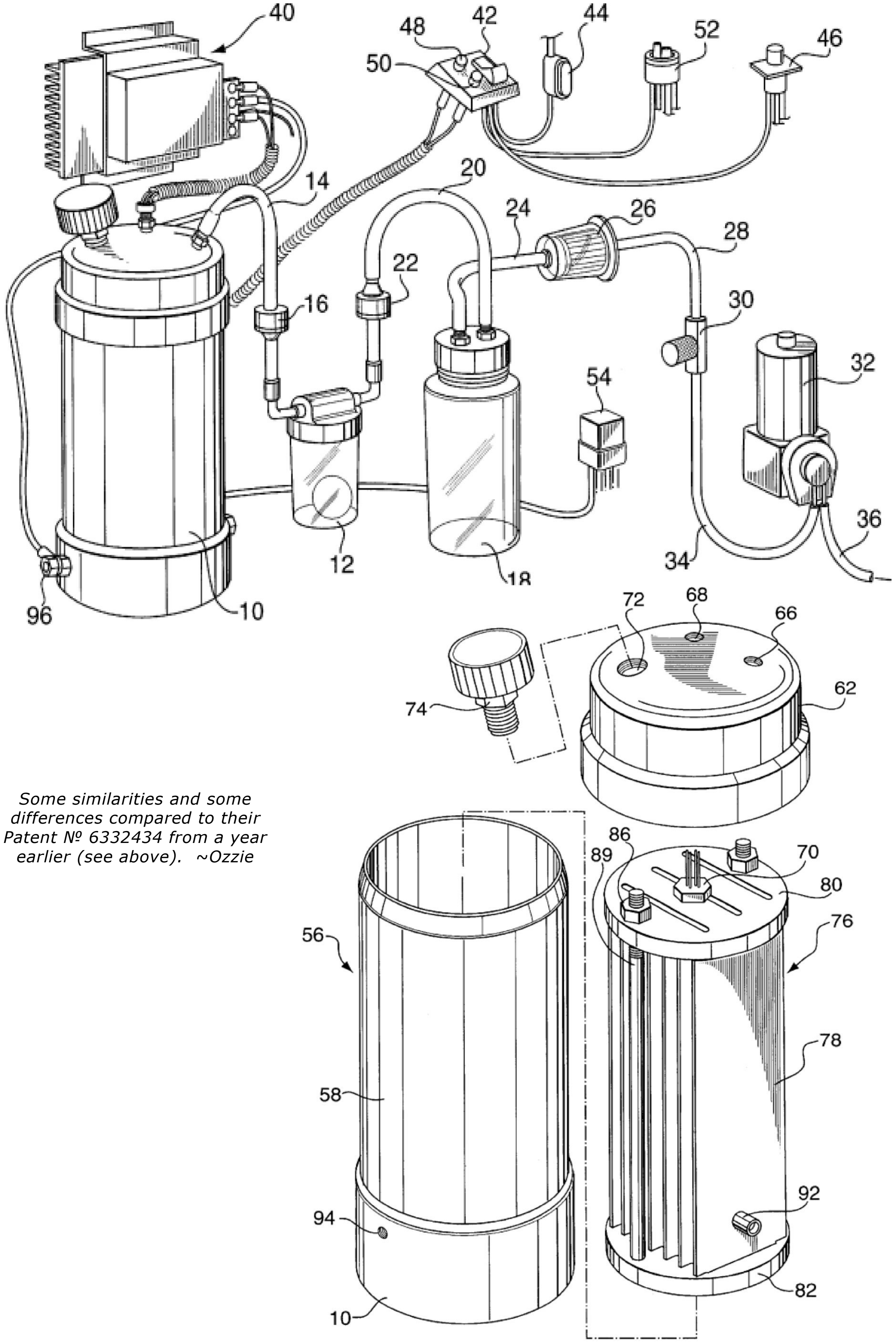

Some similarities and some differences compared to their Patent № 6332434 from a year earlier (see above). ~Ozzie

Inventor: Sang Nam Kim. Patent № 7014740 "Brown gas mass production apparatus including a line style electrolytic cell" - 2006

Disclosed is a Brown gas mass production apparatus having a line style electrolytic cell in which an electrolytic cell case having an electrolyte distribution and discharging pipe mounted on the inside bottom surface thereof is coated with insulation material on the inner surface thereof, electrode units are disposed by two or three groups in a side-by-side arrangement in the electrolytic cell case, an electrolytic cell upper plate having gas outlet nipples mounted thereon is sealingly coupled to the top surface of the cell case to form a secured sealing between edges of the upper plate and the cell case. The line style electrolytic cell further includes an auxiliary electrolyte tank connected to the electrolytic cell case for maintaining the surface of the electrolyte at a predetermined level just above the top surface of the electrode units in the electrolytic cell according to the operation of a solenoid valve, so that water is automatically fed into the electrolytic cell according to the opening and closing operation of a solenoid valve operated by a level sensor installed in the auxiliary electrolyte tank, and a relatively large horizontal space is formed just above the top surface of the electrode units, so that gas and water are separated directly at the horizontal space.

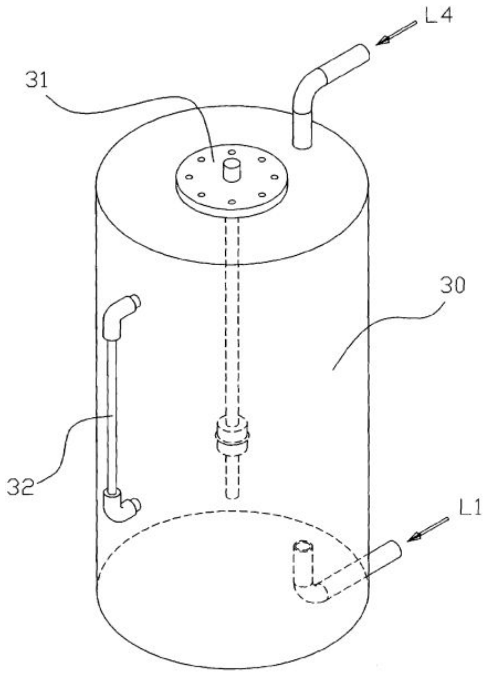

Inventor: Armand Brassard. Patent № 6579638 "Regenerative fuel cell system" – 2003

A regenerative fuel cell system. The system includes an electrolyzing device that is placed in communication with an aqueous solution for converting the aqueous solution into a hydrogen gas.

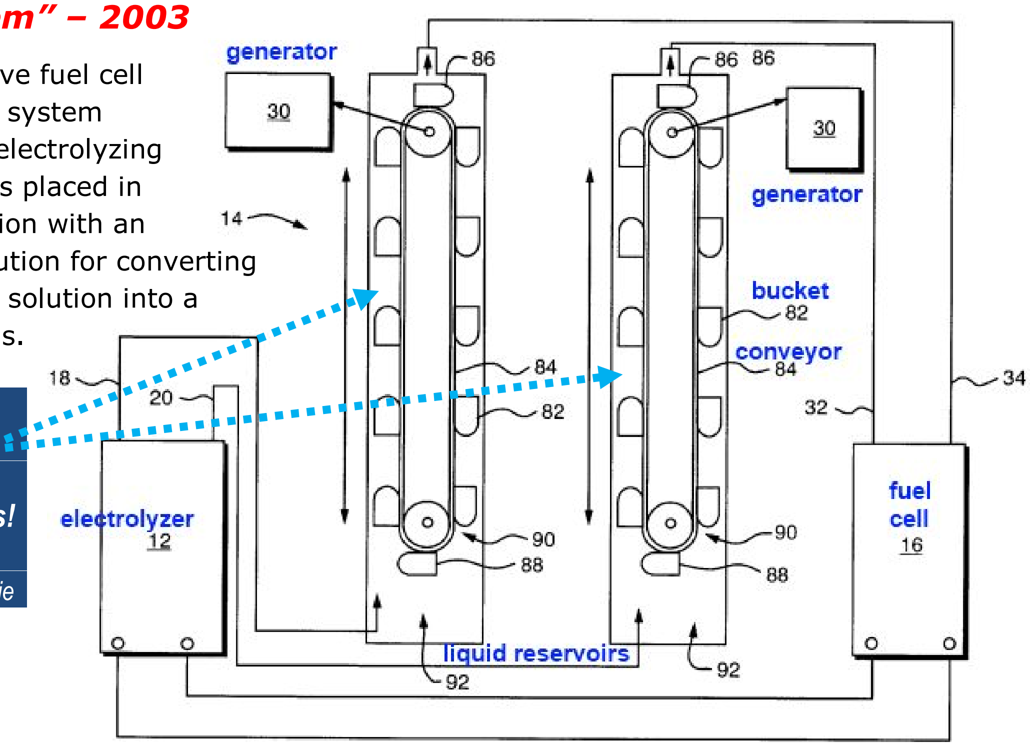

Combines BUOYANCY (Chapter 32) +electrolysis! Interesting duality. ~Ozzie

An aqueous buoyancy electrical drive is placed in fluid communication with the hydrogen gas produced by the electrolyzing device. This electrical drive includes a means for extracting mechanical energy from the hydrogen gas, and a generator for converting the energy into electrical power.

A fuel cell is placed in fluid communication with the hydrogen gas and is adapted to convert the chemical energy in the hydrogen gas and the oxygen into electrical power.

Inventor: Craig Schmitman. Patent № 6610193 "System and method for the production and use of hydrogen on board a marine vessel" – 2003

This invention is directed to an integrated onboard hydrogen (H_2) production and utilization system for all watercraft, which yields environmentally benign vessel power production without new infrastructure requirements. Water (H_2O) is supplied to a vessel, whether ashore, docked or underway, and is systematically converted into hydrogen and oxygen. The energy required for this process may be provided by any renewable or non-renewable source. The H_2 produced is either utilized at once or stored. Energy is released from the H_2 by one or more power plants.

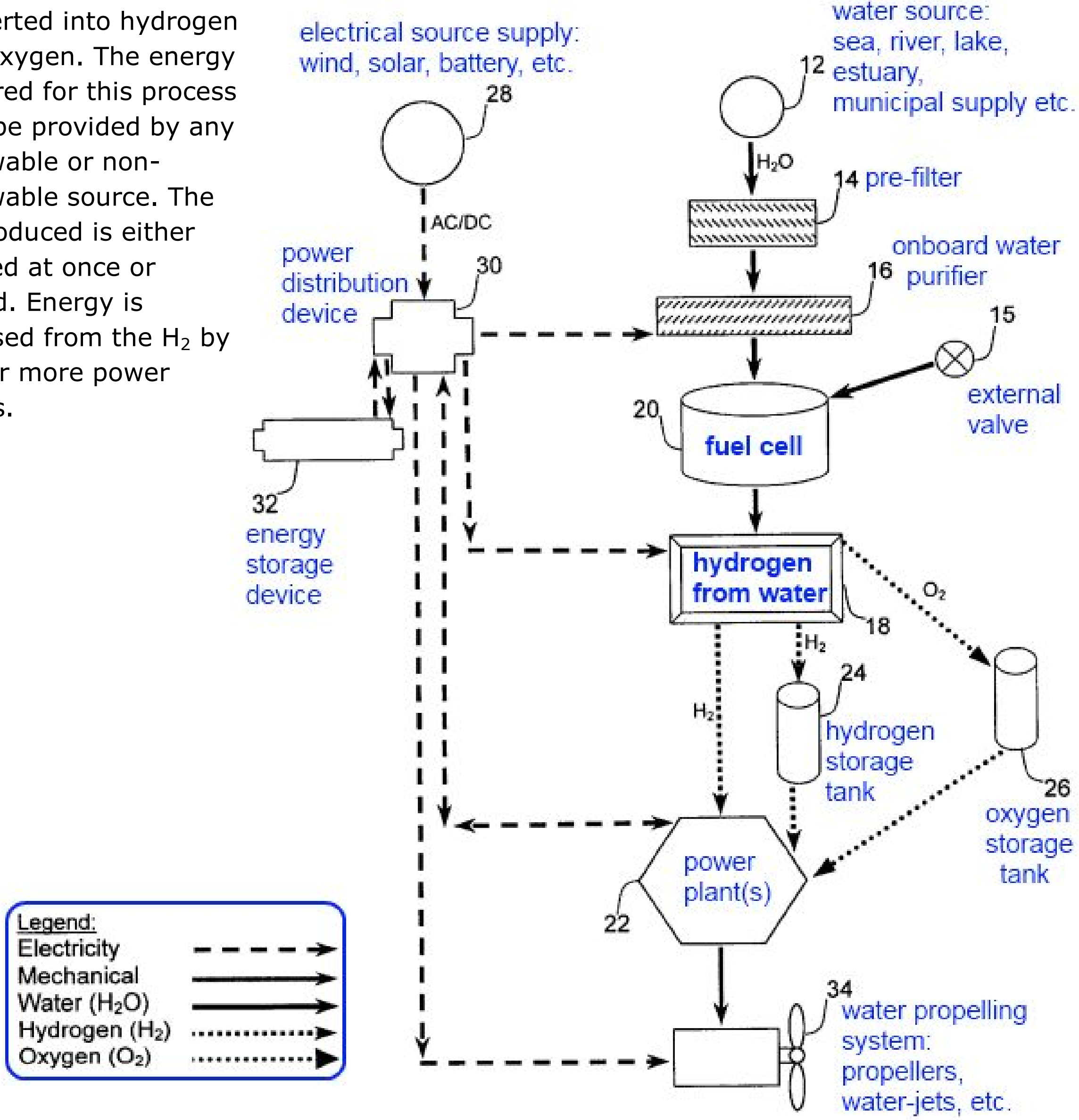

Inventor: Jeffrey Surma. Patent № 6630113
"Methods and apparatus for treating waste" – 2003

Methods and apparatus for treating waste are provided. Waste is converted in an arc plasma-joule heated melter system utilizing one or more arc plasma electrodes and a plurality of joule heating electrodes. The arc plasma electrode(s) can be configured for operation utilizing AC or DC power, or for switching between AC and DC power. The arc plasma electrodes can also be configured for independent arc voltage and arc current control. The joule heating circuits are configured for simultaneous operation with the arcing electrodes, but without detrimental interaction with the arcing electrodes.

a

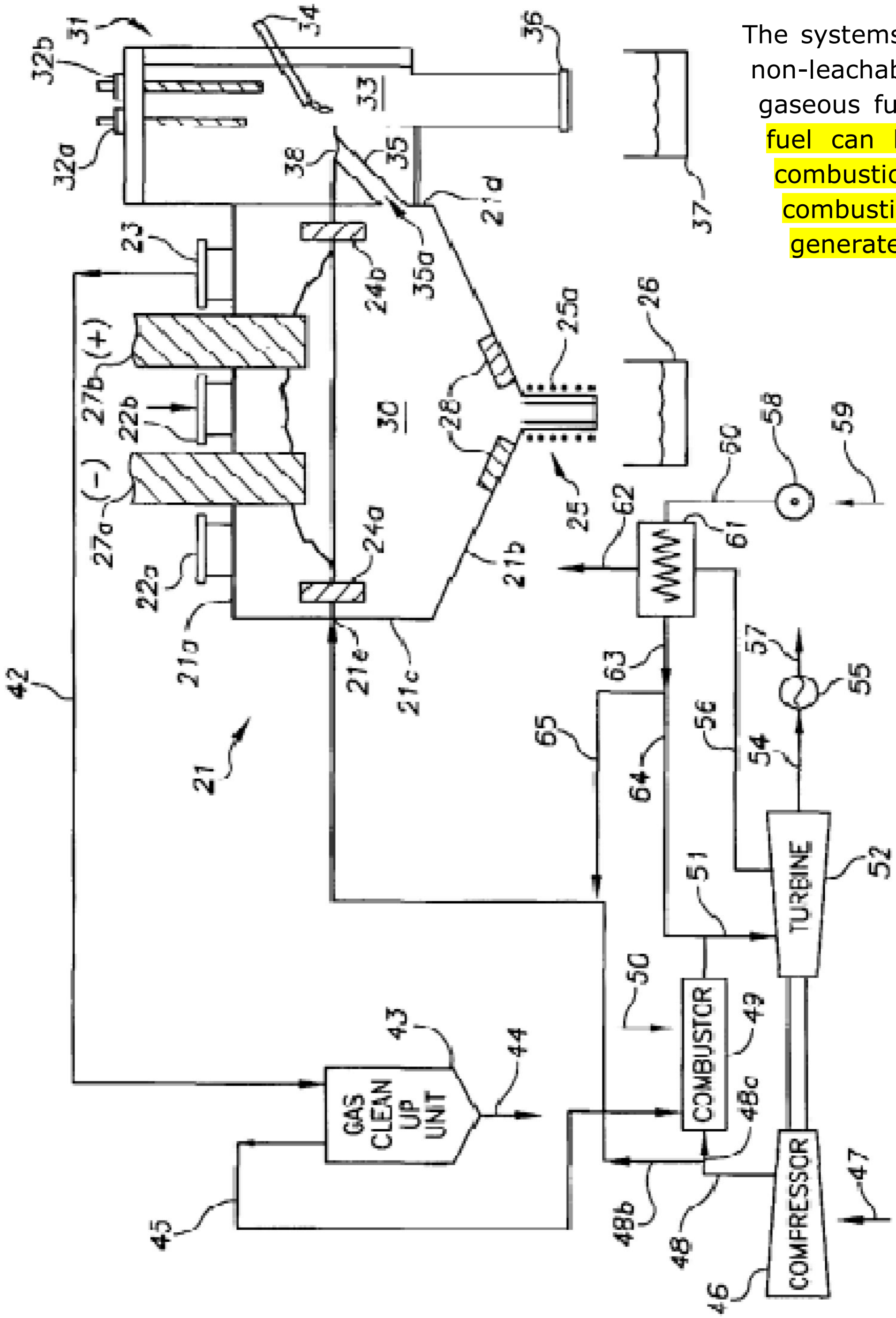

The systems provide stable, non-leachable products and gaseous fuel. The gaseous fuel can be utilized in a combustion or non-combustion process to generate electricity.

Inventors: Robert Byron, Jr. & Michael Brown. Patent № 6712944 "Gas/liquid phase separator for electrolysis cell" – 2004

A gas/liquid phase separator for an electrolysis cell includes a vessel and a float in operable communication with each other. The vessel includes a fluid inlet and first and second fluid outlets. A fluid stream comprising gas and liquid is received in the vessel through the fluid inlet, and at least a portion of the gas exits the vessel through the second fluid outlet. The float is configured to interface with the first fluid outlet and either maintain or prevent fluid communication across the first fluid outlet when the float is in at least partial contact with the first fluid outlet.

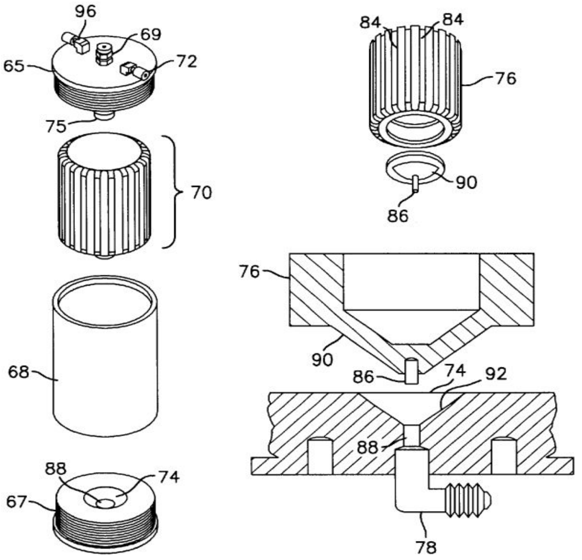

Inventor: Ruggero Maria Santilli. Patent № 6673322 "Apparatus for making a novel, highly efficient, nonpollutant, oxygen rich and cost competitive combustible gas and associated method" – 2004

A process for the production of a clean burning combustible gas by flowing a liquid through an electric arc. The electrodes have several configurations. The invention prevents the production of carbon dioxide in the gas thereby reducing its presence when combusted and exhausted to about half that associated with gasoline exhaust; increases the cost efficiency of the process by eliminating secondary chemical reactions; and increases the life of the electrodes. The chemical structure of the combustible gas is composed of stable magnetically bonded clusters of conventional molecules and atoms that are fully detectable via peaks in conventional mass spectrometric detectors, yet such clusters remain unidentifiable by the computer search among all known molecules, and have no infrared signature other than those of the conventional molecules constituting the clusters. The liquid which is flown through the arc also acquires the chemical structure of magnetically bonded clusters.

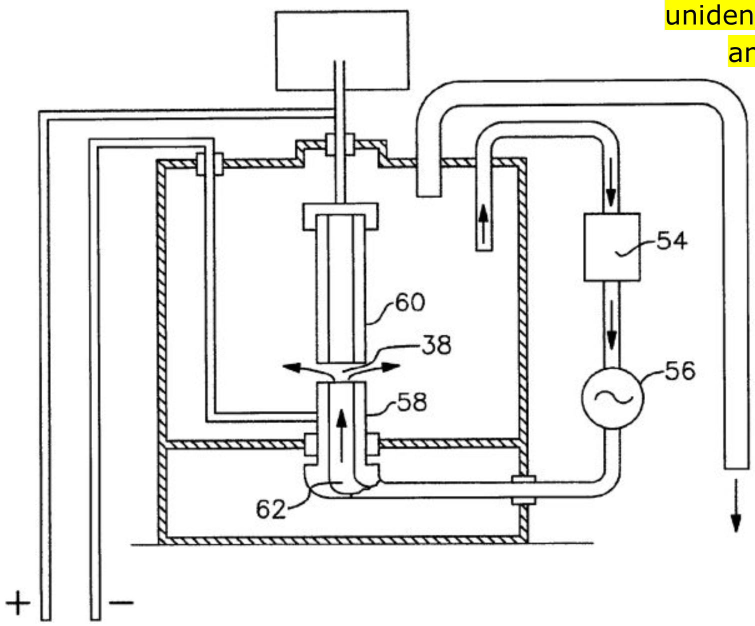

Inventor: Phillip West. Patent № 6705425
“Regenerative combustion device” – 2004

A regenerative combustion device having a combustion zone, and chemicals contained within the combustion zone, such as water, having a first equilibrium state, and a second combustible state. Means for transforming the chemicals from the first equilibrium state to the second combustible state, such as electrodes, are disposed within the chemicals. An igniter, such as a spark plug or similar device, is disposed within the combustion zone for igniting combustion of the chemicals in the second combustible state. The combustion products are contained within the combustion zone, and the chemicals are selected such that the combustion products naturally chemically revert into the chemicals in the first equilibrium state following combustion. The combustion device may thus be repeatedly reused, requiring only a brief wait after each ignition to allow the regeneration of combustible gasses within the head space.

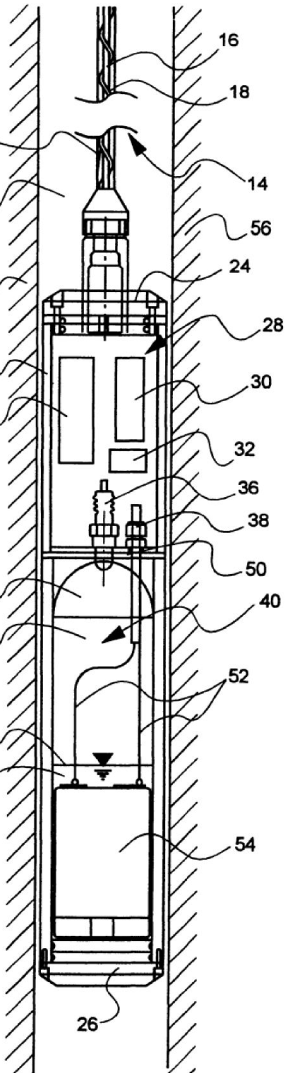

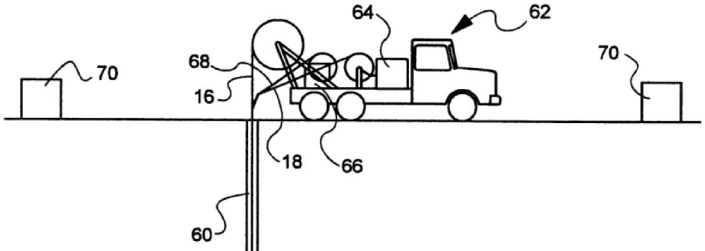

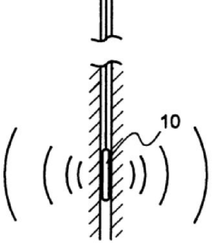

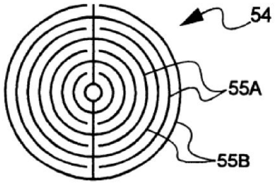

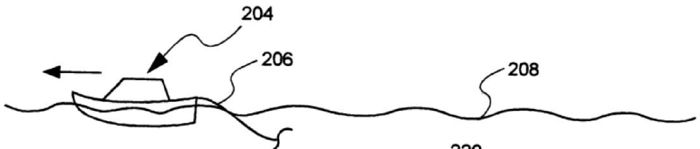

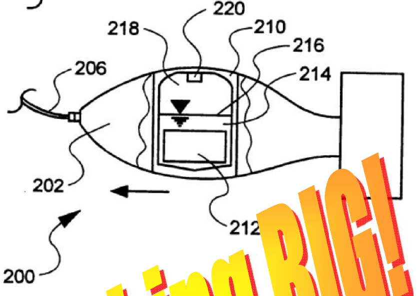

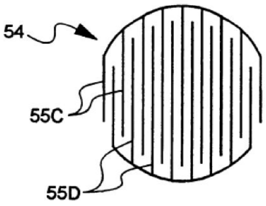

Thinking BIG!

Inventor: Gregory Wojak. Patent № 7067097 "Process for preparing a diamond substance" – 2005

A process for producing a diamond substance with a first inner nozzle and a second outer nozzle. In the first step of the process, a first mixture comprised of oxygen and a hydrocarbon gas is formed in the first inner nozzle; such hydrocarbon gas contains from about 1.01 to about 1.1 moles of carbon for each mole of oxygen present in such first mixture, and said first mixture contains at least about 10 volume percent of hydrocarbon gas. In the second step of the process, the first mixture is ignited to produce a flame core. In the third step of the process, a second mixture comprised of hydrogen and oxygen is formed in the outer nozzle; the second mixture is comprised of at least 2 moles of said hydrogen for each mole of said oxygen present in the second mixture; hydrogen gas and oxygen gas comprise at least about 20 molar volume percent of the second mixture; and the second mixture contains up to about 5 volume percent of hydrocarbon gas. In the fourth step of the process, the second mixture is ignited to produce a flame sheath. The flame sheath is disposed around the flame core so that the flame sheath completely surrounds said flame core and completely shields said flame core from the ambient atmosphere, thereby-producing a composite flame; and the composite ~~claim~~ flame *{USPTO typo. ~Ozzie}* is contacted with a substrate.

> *Further down the description it attributes Brown's Gas with known ability to create high temperatures and excite other fuels. Also notice the ratio being recommended – at least 60% Brown's Gas:*

By way of illustration, one may use Brown's Gas in combination with one or more of the aforementioned hydrocarbon gases in nozzle **101.** This gas is well known and is described, e.g., in U.S. Pat. № 6,**021**,915 *{see note[149]}*, the entire disclosure of which is hereby incorporated by reference into this specification. As is disclosed in such patent, "***The Brown's Gas that is used in the present invention is itself a non-explosive mixed gas that consists of hydrogen and oxygen mixed in a molar volume ratio of 2:1, and it is obtained by electrolysis of water; and it is known that the combustion thereof causes the molecular or atomic hydrogen and oxygen to produce heat of the reaction, thereby bringing about a quite high combustion temperature.*** In the present invention, the Brown's Gas is combusted by using a torch nozzle and an igniter or the like for producing an ignition spark, to produce a highly reducing flame of about 2,300°C., and preferably the tip of the flame good in reactivity is brought in contact with the above mixed gas flow. The number of the Brown's Gas combustion burners for bringing the Brown's Gas flame in contact with the above mixed gas flow to combust the mixed gas may be 1 or 2 or more; preferably the Brown's Gas combustion burners are used 2 or more, and more preferably 2 or 3 in number. Thus, the mixed gas is combusted at high temperatures. This is considered in such a way that the Brown's Gas flame heats the mixed gas flow as well as interacts with active chemical species produced from the fossil fuel in the mixed gas, to combust the fossil fuel gas to generate a high temperature; this high temperature causes steam explosion of the moisture in the mixed gas, thereby combusting it as a

---

[149] Another USPTO typo – it should say "U.S. Pat. № 6,**012**,915" (included in this chapter).

hydrogen/oxygen gas flame (Brown’s Gas flame) at a high speed, and the flame propagation resulting therefrom leads to combustion throughout the mixed gas. The speed of the high-speed combustion by this steam explosion is, for example, about 6.75 times (linear velocity: 2.7 m/s) that of the combustion of propane.”

When Brown’s Gas is used in the process of the invention within nozzle 101, it is preferred to use at least about 60 volume percent of the Brown’s Gas and no more than about 40 volume percent of one or more of the hydrocarbon gases.

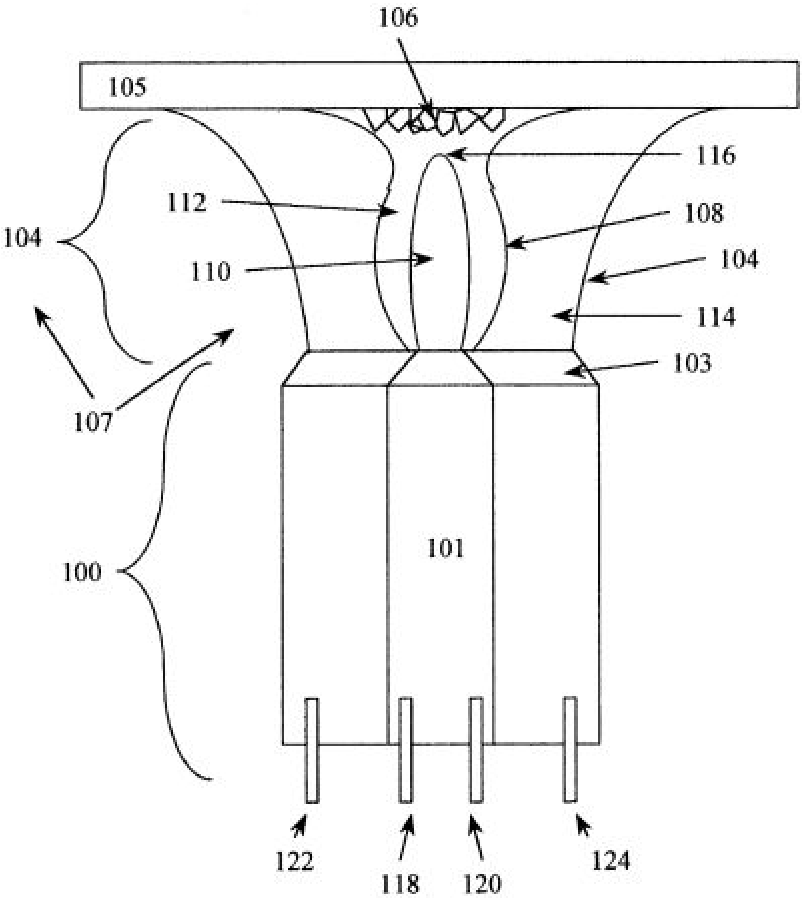

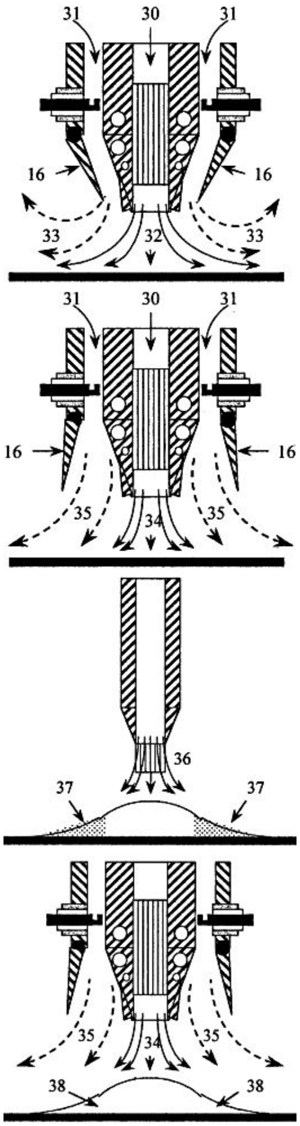

Inventors: Holger Streckert and Linden Blue (General Atomics) Patent № 6939449 “Water electrolyzer and system” – 2005

An electrolyzer for generating hydrogen by the electrolytic dissociation of water employs anode and cathode half-cells, separated by a planar polymer-based solid electrolyte, and includes a water reservoir for independently maintaining a desired level of water in the anode and cathode half-cells. A hydrogen exit chimney extends vertically upward from each cathode half-cell and enters a separation chamber; a gas exit passageway is closed by a separation membrane that allows the passage of H_2 but rejects liquid H_2O, while a return water passageway enters near the bottom of the cathode half-cell. The half-cells are preferably formed by molded plastic frames that are arranged as a cell stack containing a plurality of electrolytic cells, with flat metal anodes and cathodes being respectively sandwiched about the solid electrolyte membrane in each cell. A pair of flat crushable metal plates are located at each end of the cell stack; adjacent a pair of pressure plates that exert axial squeezing pressure to seal the cells. Specially designed, dual metal-hydride cartridges are used to provide larger quantities of H_2 from a single cartridge; a high temperature metal hydride is provided in a rear region of the cartridge that is heated by an electrical resistance heater to a temperature of about 200°C. or above while room temperature metal hydride powder fills a front section of the cartridge.

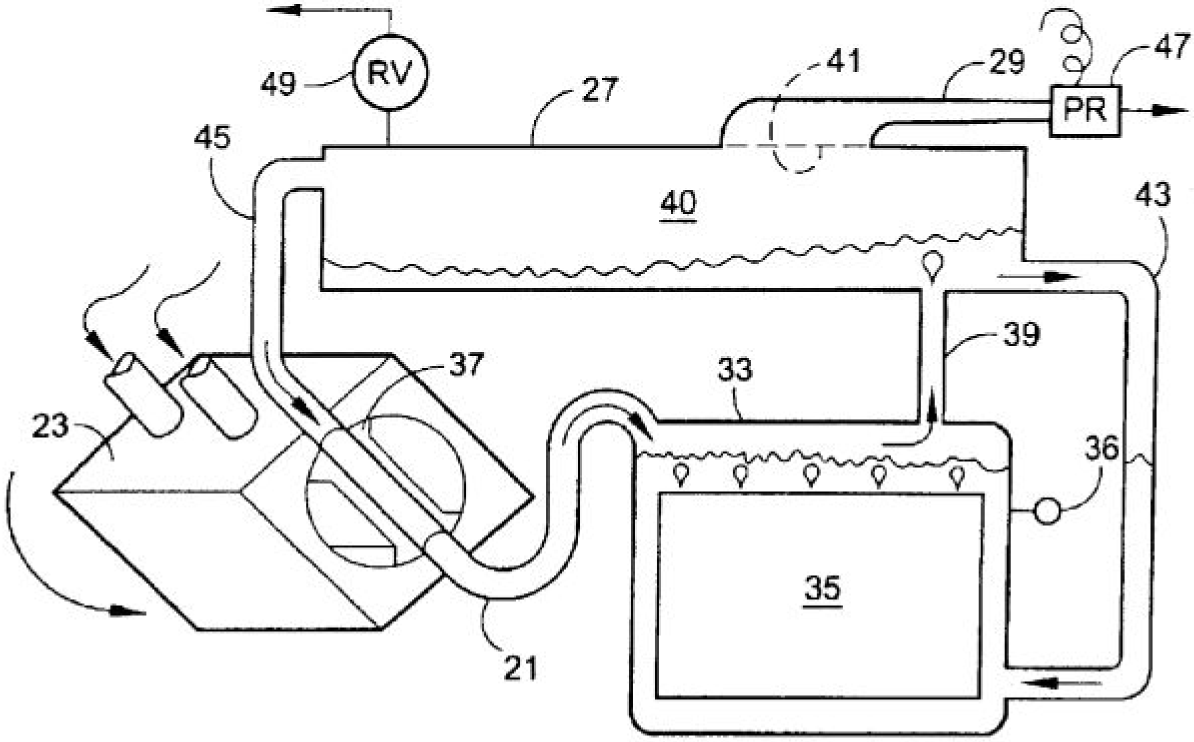

Inventor: Charles L. Stone.

Patent № 7552702-B2 "Water fueled engine" – 2009

A water fueled engine, which purifies, heats and cracks water into its constituent elements in gaseous form, stores the hydrogen and oxygen separately under pressure, feeds the hydrogen to a combustion engine where it is reacted in the presence of atmospheric air, transferring the heat generated from the reaction to a water heater and torque energy to a drive shaft; an after burner that further reacts the exhaust process of the combustion engine in the presence of more atmospheric air and oxygen from the cracking process, and a turbine that drives a battery connected alternator for powering a control unit for the system, which controls all system components to ensure on demand operation.

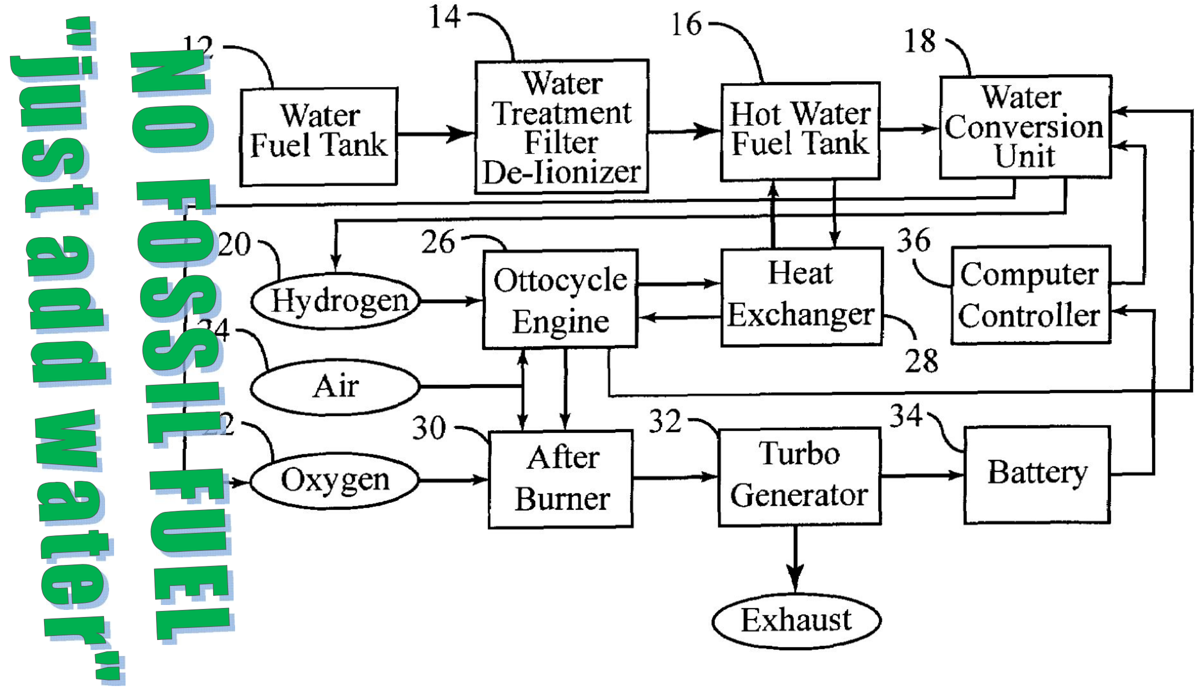

Inventors: Manabu Toyoshima, Masaru Yonezawa, Kiyoshi Hirai, Akiko Miyake, Yutaka Ishii, Tsutomu Oi, Shingo Toriu (Japan). Patent № 6852205 "Water-electrolysis-device use electrode plate, unit, solid electrolytic membrane unit and electrolytic cell" – 2005

According to the present invention, there is provided an electrode plate for a water electrolysis device, which is formed from a metal plate having such a thickness as to be capable of being press-formed, and which comprises a flat plate portion, and a peripheral edge portion positioned on the outer side of the flat plate portion and bent so that recesses and protrusions are alternately arrayed along an outer peripheral edge thereof.

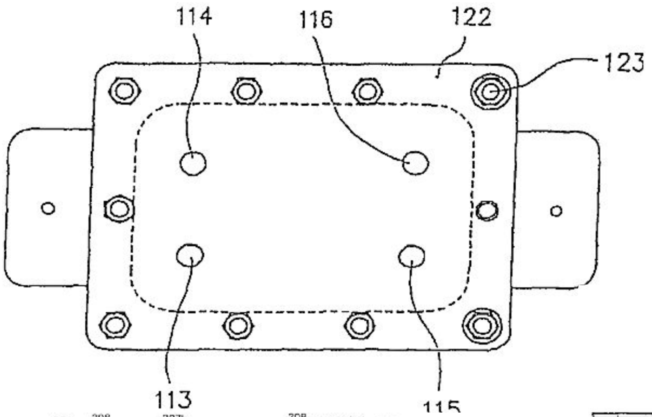

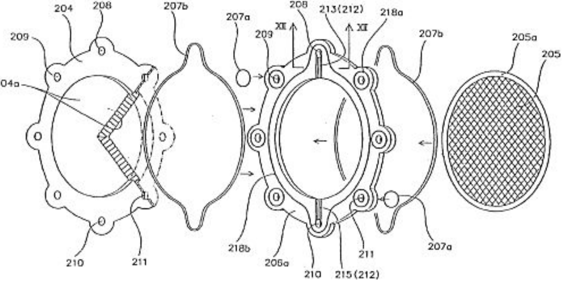

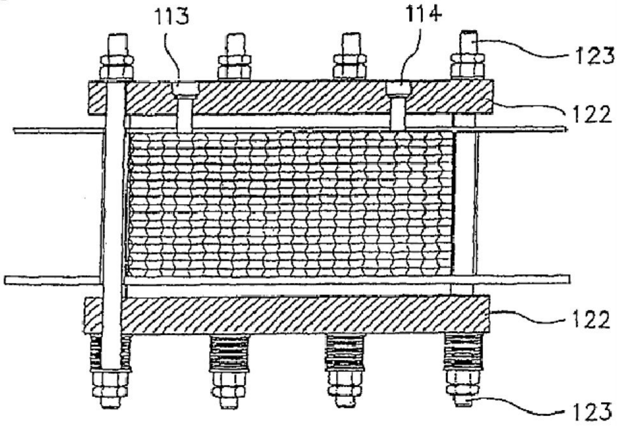

Inventor: Gary Austin. Patent № 7125480 "Methods for affecting the ultra-fast photodissociation of water molecules" – 2006

A method for the ultra-fast photodissociation[150] of water molecules into H_2 and O_2 gases is presented. Water vapor is initially produced and supplied to a photolysis bottle. Within the photolysis bottle, the water vapor is illuminated by a light signal to dissociate H_2 and O_2 gases from the water vapor. The dissociated H_2 and O_2 gases are ***radiated with an RF signal to inhibit recombination*** of the dissociated H_2 and O_2 gases, and the dissociated H_2 and O_2 gases are subsequently recovered.

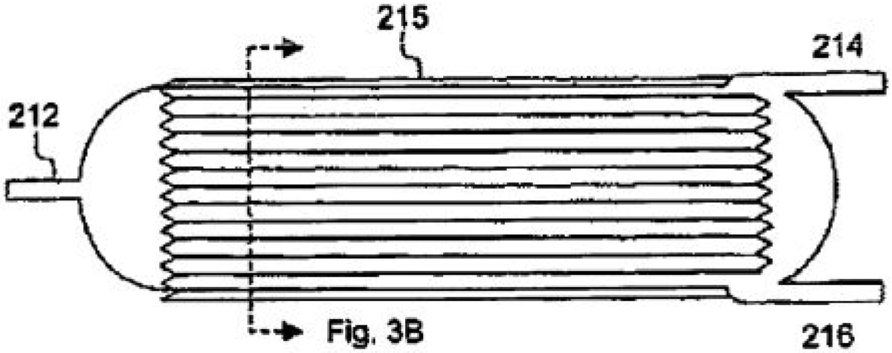

Fig. 3B

Inventors: Rodney Herrington, Gregg Mich and Kevin Schwarz. Patent № 7005075 "Gas drive electrolytic cell" – 2006

The present invention is directed to an electrolytic cell that is completely sealed during the electrolysis operation during production of oxidant. Gasses generated within the electrolysis operation, primarily hydrogen that is liberated at the cathode surface, increase the pressure within the cell, and the gas pressure is ultimately utilized to expel the oxidant from the cell chamber.

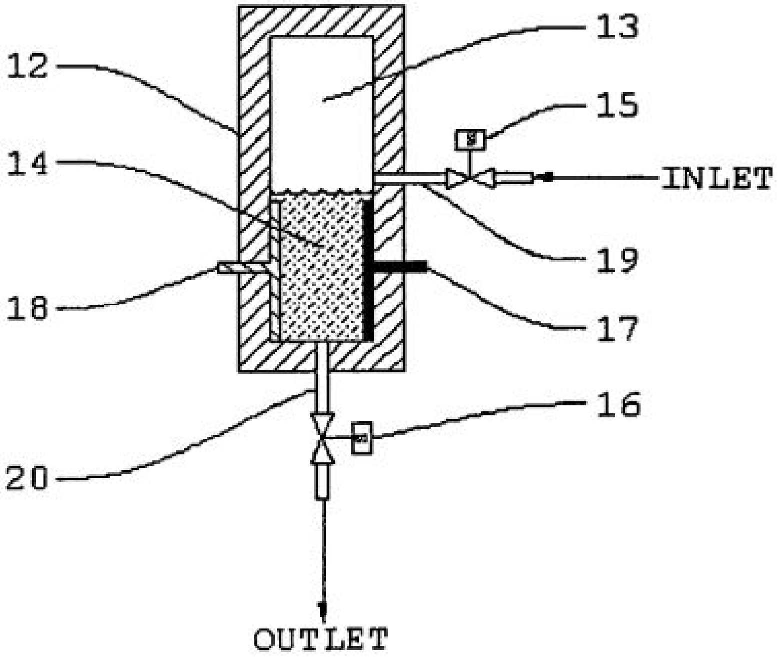

---

[150] Also called Photolysis (or Photodecomposition) – a chemical reaction in which a chemical compound is broken down by photons.

Inventor: Robert O'Brien. Patent № 7045042 "Gas-collecting electrets as magneto-electrolysis cell components" – 2006

A tank-type water electrolysis apparatus with unipolar electrodes arrangement and wherein imposed magnetic fields enhance electrolyte solution circulation, further enhanced in apparatus operation by use of immersed electrets providing partitioning structure between separated hydrogen bubbles-producing and oxygen bubbles-producing regions in the solution. The included immersed electrets, which may be of polytetrafluoroethylene[151] or other suitable material, perform the functions of attracting bubbles away from points of origination at the electrodes, and of promoting coalescence of smaller bubbles into larger ones of greater buoyancy.

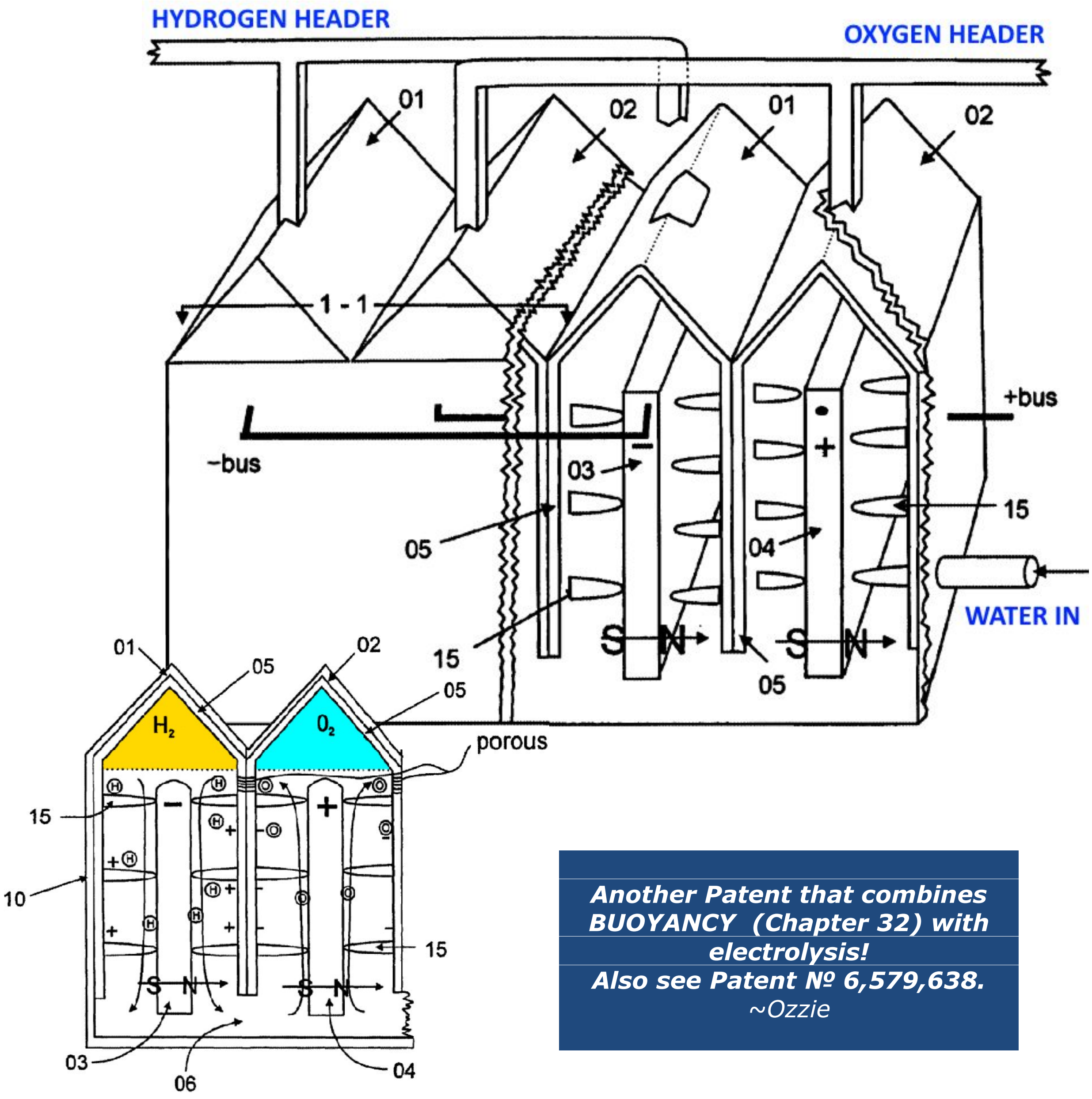

Another Patent that combines BUOYANCY (Chapter 32) with electrolysis!
Also see Patent № 6,579,638.
~Ozzie

---

[151] Known as Teflon®

Inventors: Georg Roters, Roland Mader, Helmut Sommer, Genrih Erlikh, Yehuda Pashut. Patent № 7144826
"Method and apparatus for the production of process gas that includes water vapor and hydrogen formed by burning oxygen in a hydrogen-rich environment" – 2006

The aim of the invention is the simple and economical production of a hydrogen-rich process gas from water vapor and hydrogen, whereby the proportion of water vapor to hydrogen may be precisely controllable and reproducible. Said aim is achieved, with a method and device for the production of a process gas for the treatment of substrates, in particular semiconductor substrates, in which the oxygen for formation of a process gas, comprising water vapor and hydrogen, is burnt in a hydrogen-rich environment in a combustion chamber.

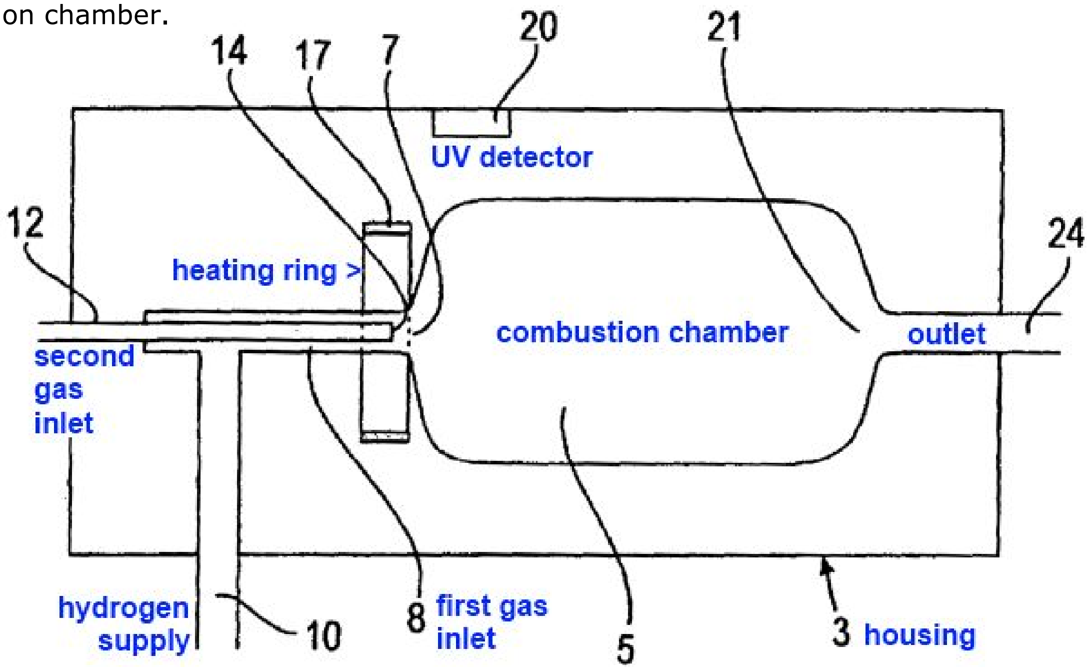

Need FREE WATER for your Waterfuel projects?

US Patent 5435151 has free ideas for you – and other free plans are available online.

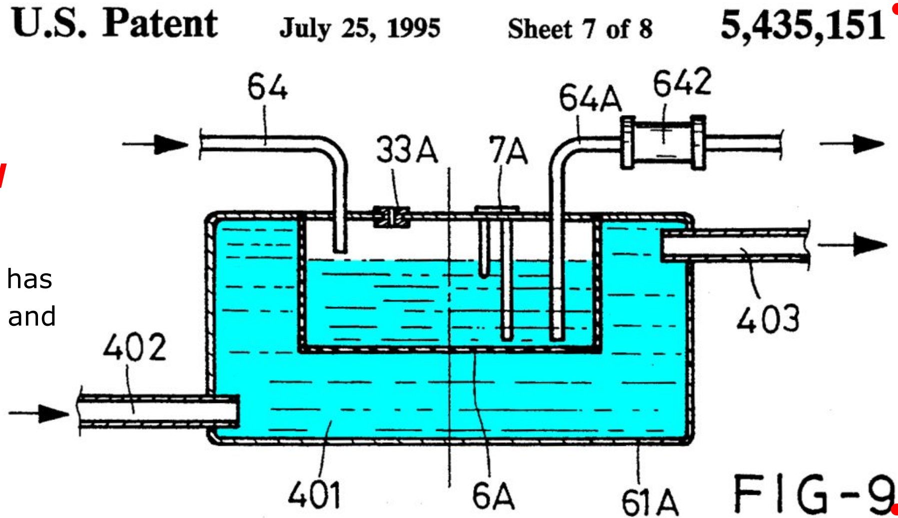

FIG-9

Inventors: Norman Wootan and Hawkins; Kenneth. Patent № 7097676 "Process and device for producing hydrogen" – 2006

A process and a device are provided for producing hydrogen gas from water and carbon. The process includes introducing steam and powdered carbon in stoichiometric ratio of carbon to water into a preheated oxidization chamber in such a way that a gas plasma is produced in which the steam is decomposed into its hydrogen and oxygen gas components and oxygen is combined with carbon to form carbon dioxide gas in an exothermic reaction at temperatures above 2000°C., and separating the carbon dioxide gas from the hydrogen gas.

The device for conducting this process has an oxidization chamber defined in a hollow body and being provided with a preheater and having at least one inlet port for introducing steam into the oxidization chamber, at least one inlet port for introducing powdered carbon into the oxidization chamber, and at least one exit port for carrying off generated hydrogen gas and/or generated carbon dioxide gas from the oxidization chamber.

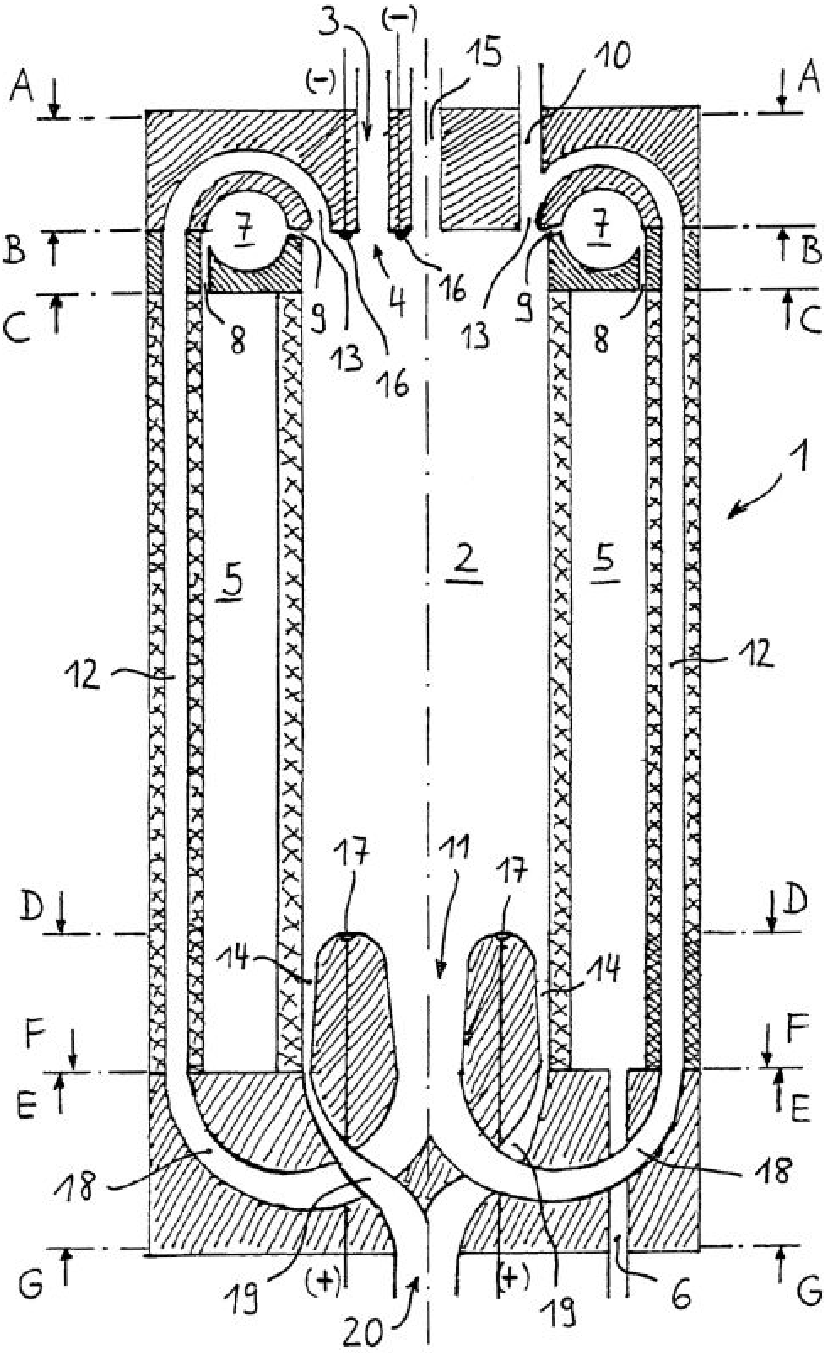

*Inventors: Dave Van Vliet, Herbert Wallace Campbell and **Stephen Barrie Chambers*** *(Xogen). Patent № 7160472 “Treatment of a waste stream through production and utilization of oxyhydrogen gas” – 2007*

Methods and systems for treating a waste stream in a waste treatment system involve performing a unit process of the waste treatment system by contacting the waste stream with oxyhydrogen-rich gas generated on-site by an oxyhydrogen gas generator that implements water dissociation technology. In a preferred embodiment, the oxyhydrogen gas generator involves applying a pulsed electrical signal to a series of closely spaced electrodes that are submerged in the waste stream to produce ***oxyhydrogen-rich gas from a water component of the waste stream***. Operation of the oxyhydrogen gas generator in the waste stream may accomplish one or more unit processes for waste treatment, such as conditioning, stabilization, thickening, and dewatering, among others. At least a portion of the oxyhydrogen-rich gas can be conveyed for a second use in the waste treatment system, such as a source of combustible fuel for incineration or power generation, for example.

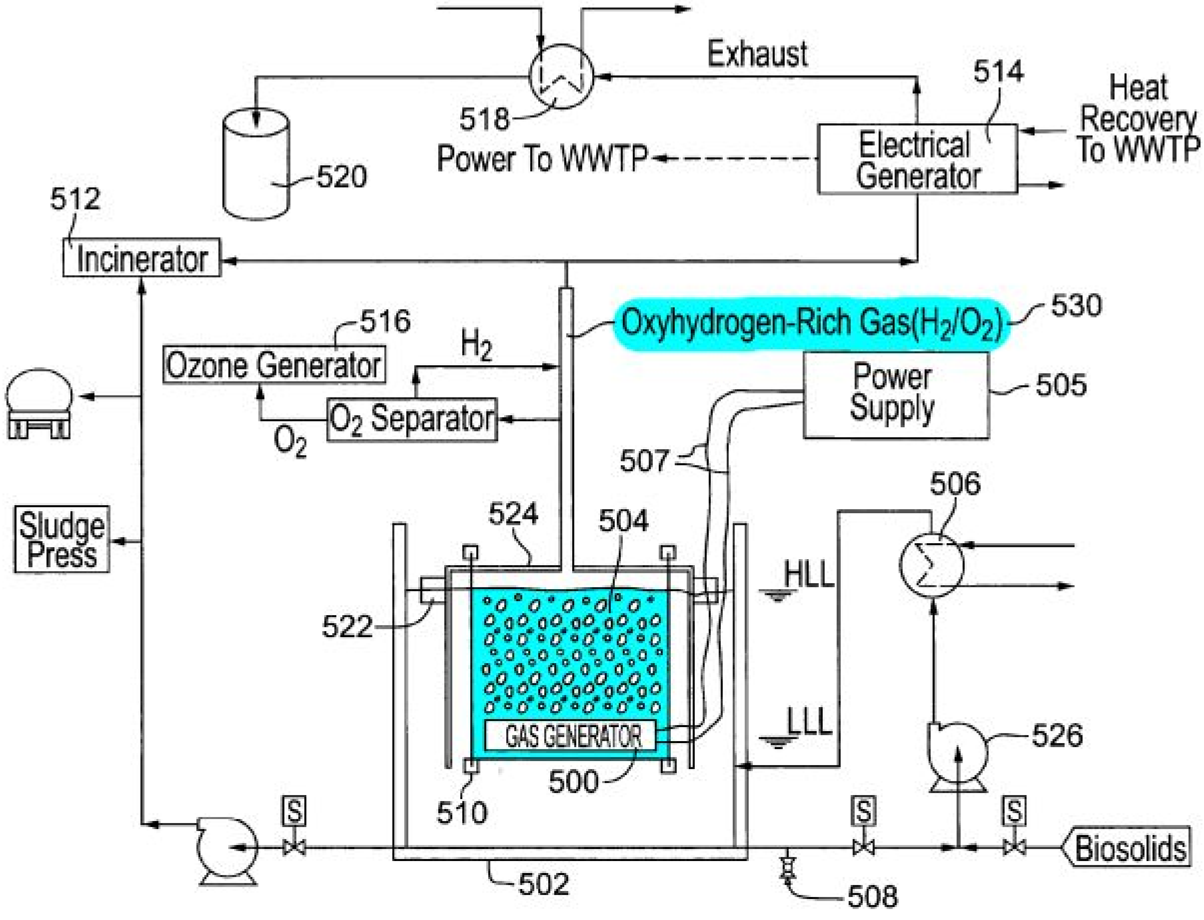

Inventors: Marco Maiwald and Bertram Muller (Voith Siemens Hydro Power Generation, Germany). Patent № 6864596 "Hydrogen production from hydro power" – 2005

A turbine installation configured for large scale hydrogen production includes a foundation structure separating an upper elevation headwater from a lower elevation tailwater[152]. The foundation structure defines a water passageway extending therethrough between an inlet adjacent the headwater and an outlet adjacent the tailwater. A runner is supported for rotation by the foundation and disposed in the water passageway intermediate the inlet and the outlet so that water flowing through the passageway as a result of head differential causes rotation of the runner. A generator is supported by the foundation and connected to the runner by a rotary shaft for generating electrical power as the runner rotates. ***An electrolyzer is electrically coupled to the generator for receiving the electrical power and producing hydrogen.*** A control system is capable of sensing the remaining hydrogen storage capacity and performing an economic comparison analysis to determine whether operating the turbine to produce additional hydrogen or to supply a utility grid with power provides the highest economic return.

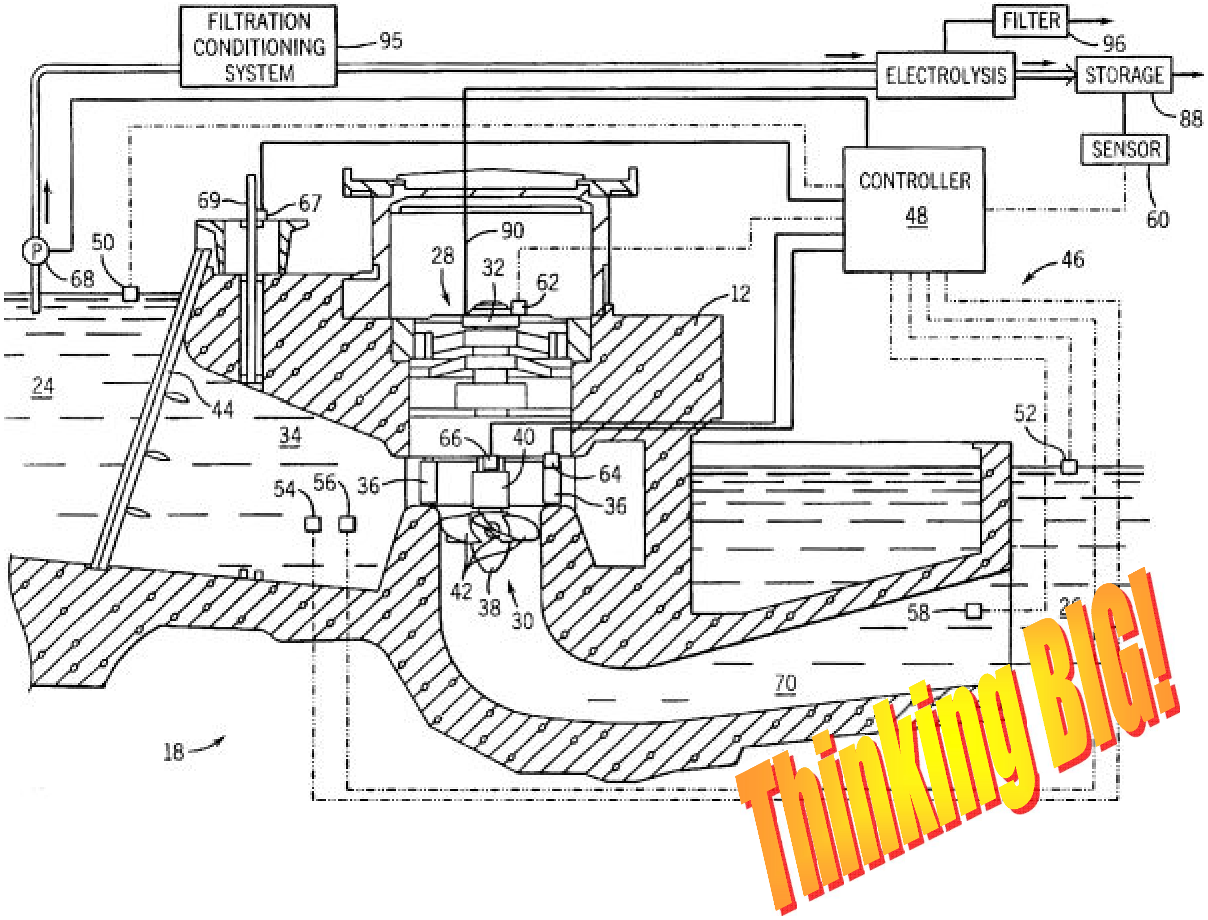

---

[152] Waters located immediately downstream from a hydraulic structure, such as a dam, bridge or culvert.

Inventor: Arthur Morse. Patent № 6918350
"Sea-based hydrogen-oxygen generation system" – 2005

A method for generation of hydrogen and oxygen contained in a salt solution provides for the disposing a number of wind turbines on navigable collection vessels in waters distant from shore. The wind turbines have a large number of blades, typically 30, to provide high torque for generating electricity used for ***extracting said gasses from the atmosphere by means of electrolysis.*** The collection vessels are disposed in predetermined zones, which are changed when weather conditions provide better collection conditions elsewhere. The gasses are stored in cylinders located both on the collection vessels, and on storage vessels attached to the collection vessels. After collection the cylinders are transported to shore facilities for further purification and/or distribution.

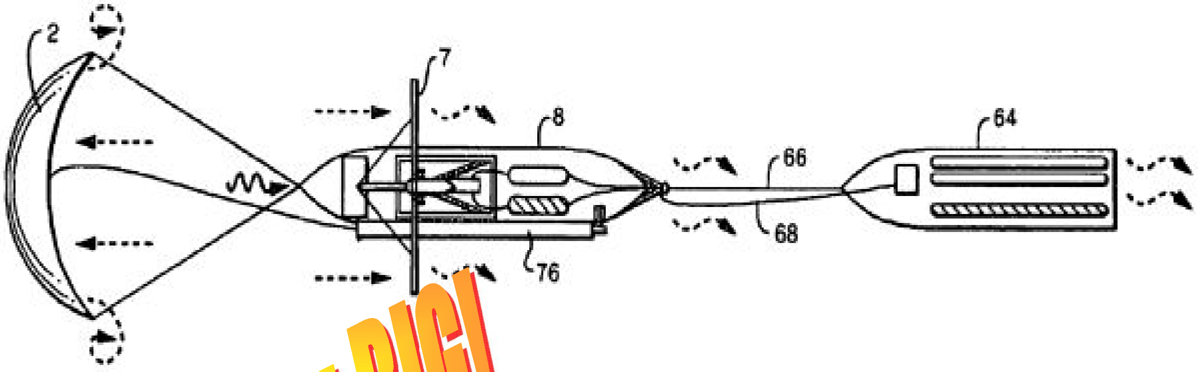

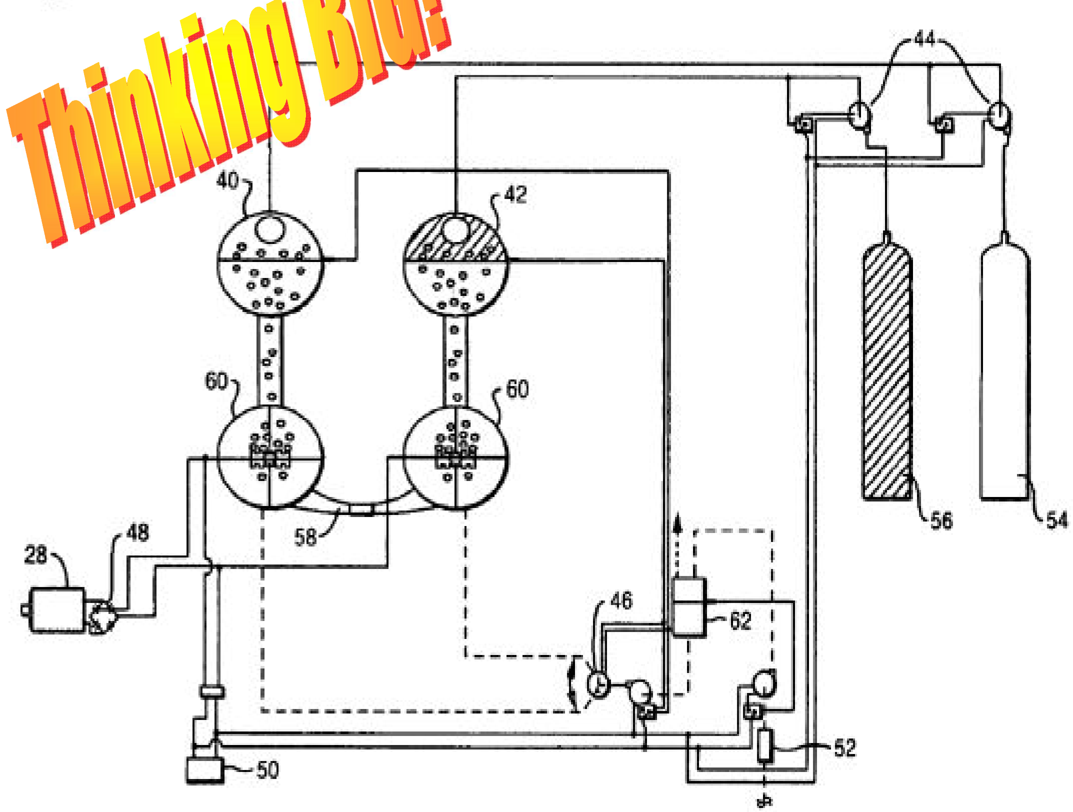

Inventors: Anwer Puthawala and Peter Schonfeld (**Siemens** Aktiengesellschaft, Germany). Patent № 6841046

"System for supplying a generator with hydrogen" – 2005

A system is for supplying a generator with hydrogen, in particular a generator of a power generating plant. The system offers a high level of safety while at the same time making handling easy. The system includes a closed system cycle for carrying water and/or gas and a hydrogen feed line, branching off from the system cycle, for the generator. The system cycle includes an electrolysis unit designed as a membrane electrolyzer.

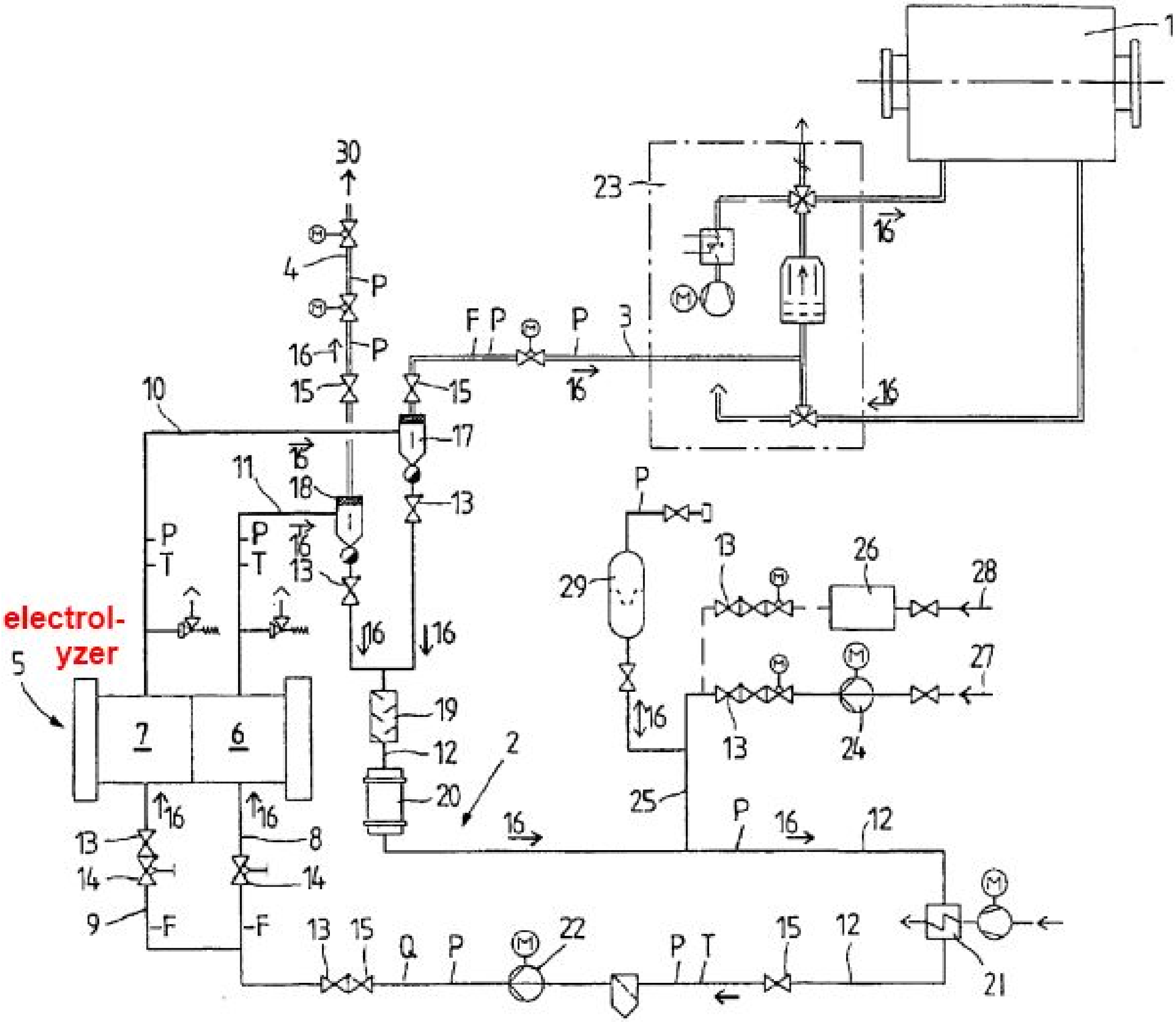

Inventors: Randell L. Mills, William R. Good, Jonathan Phillips and Arthur I. Popov. Patent № 6024935
"Lower-energy hydrogen methods and structures" – 2000

Methods and apparatus for ***releasing energy from hydrogen atoms*** (molecules) by stimulating their electrons to relax to quantized lower energy levels and smaller radii (smaller semimajor and semiminor axes) than the "ground state" by providing energy sinks or means to remove energy resonant with the hydrogen energy released to stimulate these transitions. An energy sink, energy hole, can be provided by the transfer of at least one electron between participating species including atoms, ions, molecules, and ionic and molecular compounds. In one embodiment, the energy hole comprises the transfer of **t** electrons from one or more donating species to one or more accepting species whereby the sum of the ionization energies and/or electron affinities of the electron donating species minus the sum of the ionization energies and/or electron affinities of the electron accepting species equals approximately $m \bullet 27.21$ eV ($m \bullet 48.6$ eV) for atomic (molecular) hydrogen below "ground state" transitions where ***m*** and ***t*** are integers. The present invention further comprises a hydrogen spillover catalyst, a multifunctionality material having a functionality which dissociates molecular hydrogen to provide free hydrogen atoms which spill over to a functionality which supports mobile free hydrogen atoms and a functionality which can be a source of the energy holes. The energy reactor includes one of ***an electrolytic cell***, a pressurized hydrogen gas cell, and a hydrogen gas discharge cell. A preferred pressurized hydrogen gas energy reactor comprises a vessel; a source of hydrogen; a means to control the pressure and flow of hydrogen into the vessel; a material to dissociate the molecular hydrogen into atomic hydrogen, and a material which can be a source of energy holes in the gas phase. The gaseous source of energy holes includes those that sublime, boil, and/or are volatile at the elevated operating temperature of the gas energy reactor wherein the exothermic reaction of electronic transitions of hydrogen to lower energy states occurs in the gas phase.

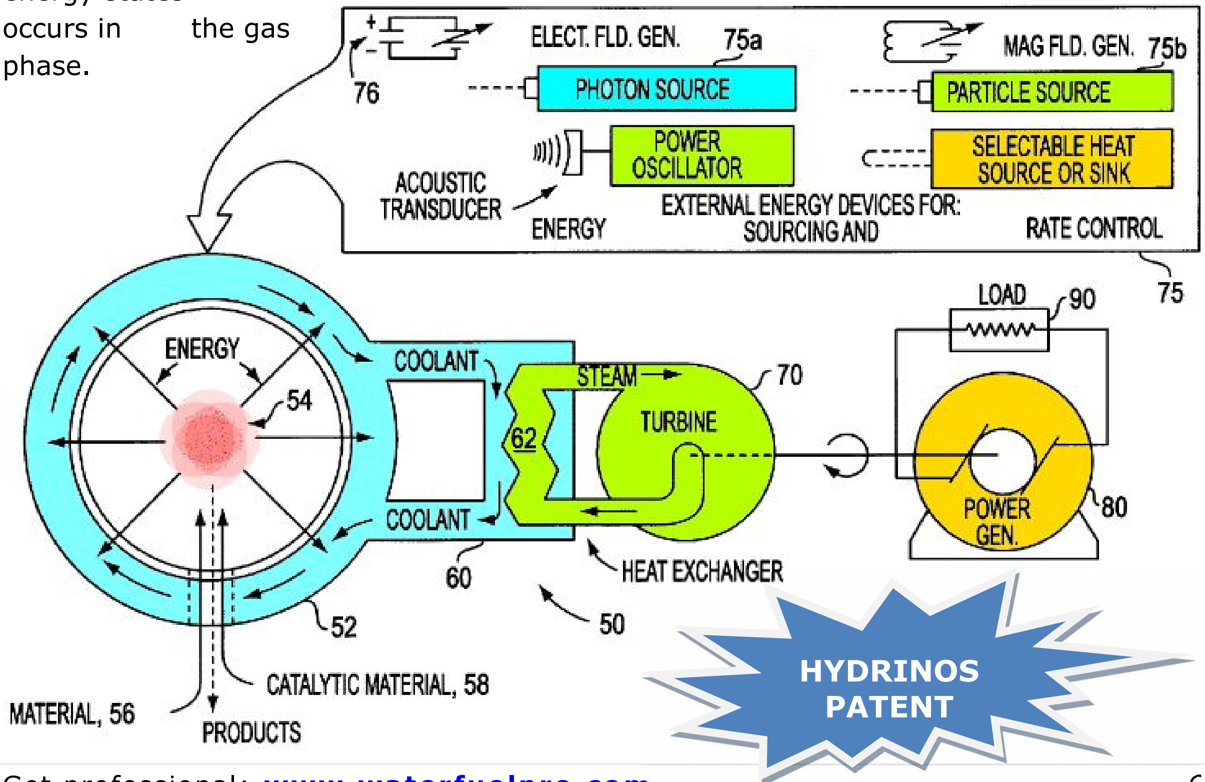

Water Cavitation Patents

Inventor: Hugh G. Flynn. Patent № 4333796
"Method of generating energy by acoustically induced cavitation fusion and reactor therefor" – 1982 *(filed in 1978,* ***eleven years before the 1989*** *Pons & Fleischmann announcement of Cold Fusion!)*

Two different cavitation fusion reactors (CFR's) are disclosed. Each comprises a chamber containing a liquid (host) metal such as lithium or an alloy thereof. Acoustical horns in the chamber walls operate to vary the ambient pressure in the liquid metal, creating therein small bubbles which are caused to grow to maximum sizes and then collapse violently in two steps. In the first stage the bubble contents remain at the temperature of the host liquid, but in the second stage the increasing speed of collapse causes an adiabatic compression of the bubble contents, and of the thin shell of liquid surrounding the bubble. Application of a positive pressure on the bubble accelerates this adiabatic stage, and causes the bubble to contract to smaller radius, thus increasing maximum temperatures and pressures reached within the bubble. At or near its minimum radius the bubble generates a very intense shock wave, creating high pressures and temperatures in the host liquid.

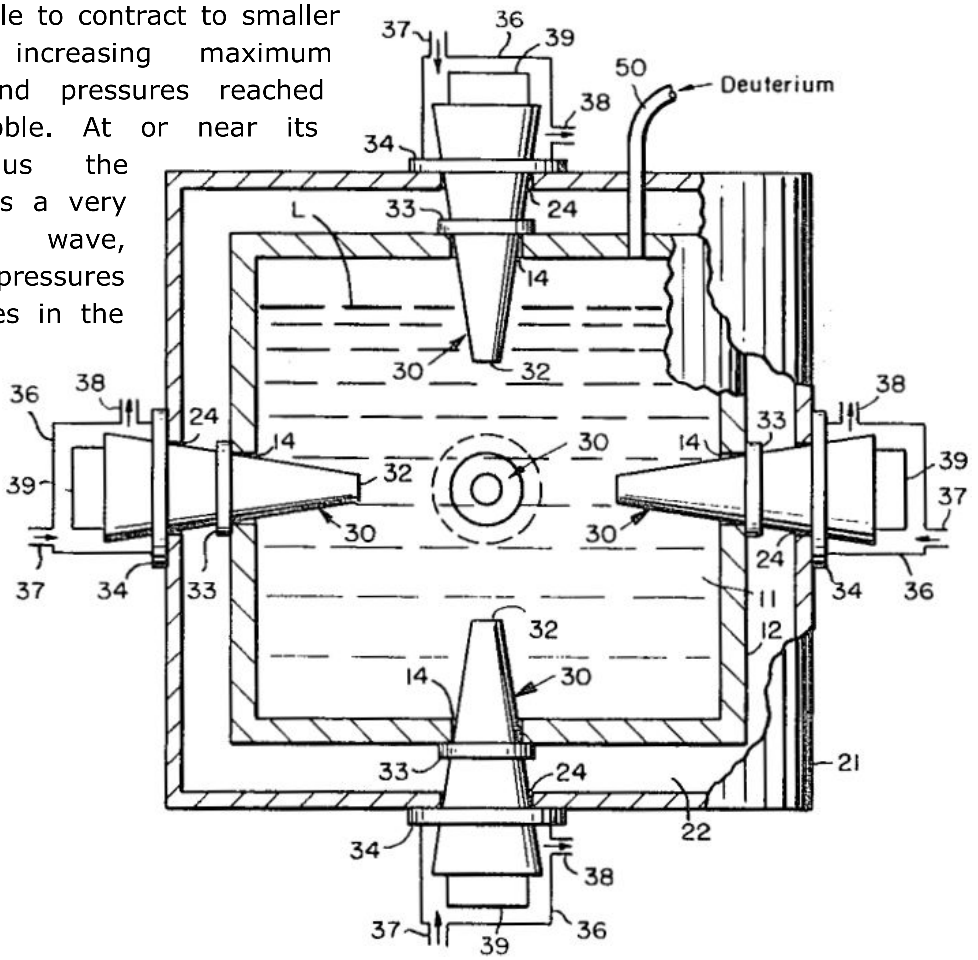

NOTES (~Ozzie):

1) The described liquid is not water but the same bubble cavitation occurs – by acoustics – and to the same end result of producing excess heat;

2) This was sequelled by Patent 4,563,341A by same inventor for converting graphene to diamond using bubble cavitation, but I did not list it here as it's not Waterfuel related IMHO.

Inventor: Daniel Marin. Patent № 6719817
"Cavitation hydrogen generator" – 2004

A cavitating hydrogen generator is provided to ***mechanically*** separate hydrogen molecules from water to be used as a fuel source. Turbines fans rotating at a high RPM agitate water that is introduced into a vacuum and captures and separates the resulting hydrogen and oxygen molecules and stores the hydrogen molecules and purges the oxygen molecules.

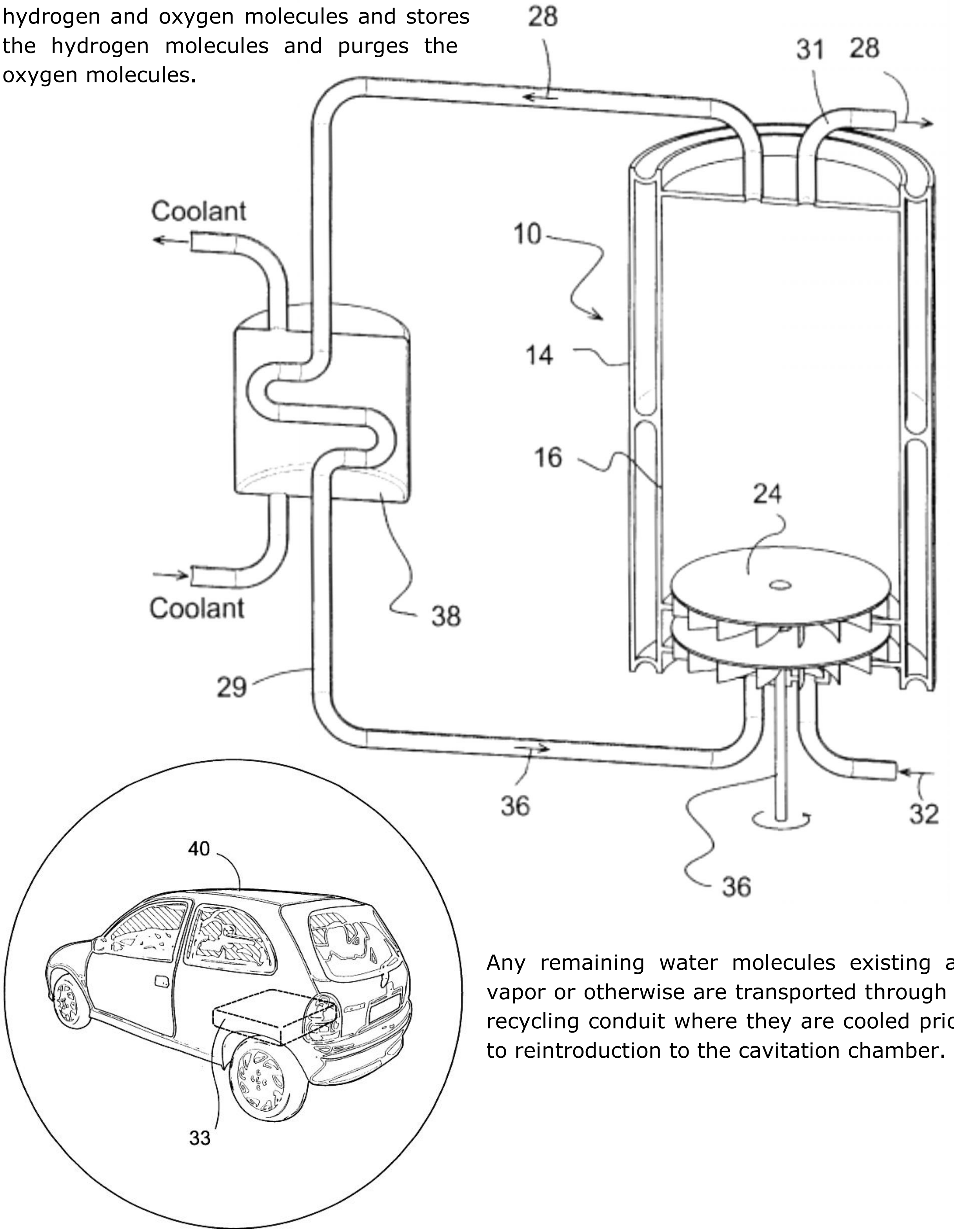

Any remaining water molecules existing as vapor or otherwise are transported through a recycling conduit where they are cooled prior to reintroduction to the cavitation chamber.

Inventor: Mark L. LeClair. Patent № 7517430 B1 "Method and apparatus for the controlled formation of cavitation bubbles" – 2009

The present invention discloses a method and apparatus for the directed formation of a re-entrant micro-jet formed upon the collapse of a cavitation bubble formed proximate to a work surface placed in a fluid. A mask containing an orifice, placed between the work surface and the cavitation bubble, is utilized to direct the re-entrant micro-jet to the work surface. The cavitation bubble may be formed in the desired location by focusing an energy flow proximate to the mask. The energy flow may be obtained by radiation from laser, x-ray, or electrical discharge sources. {More in Chapter 16}

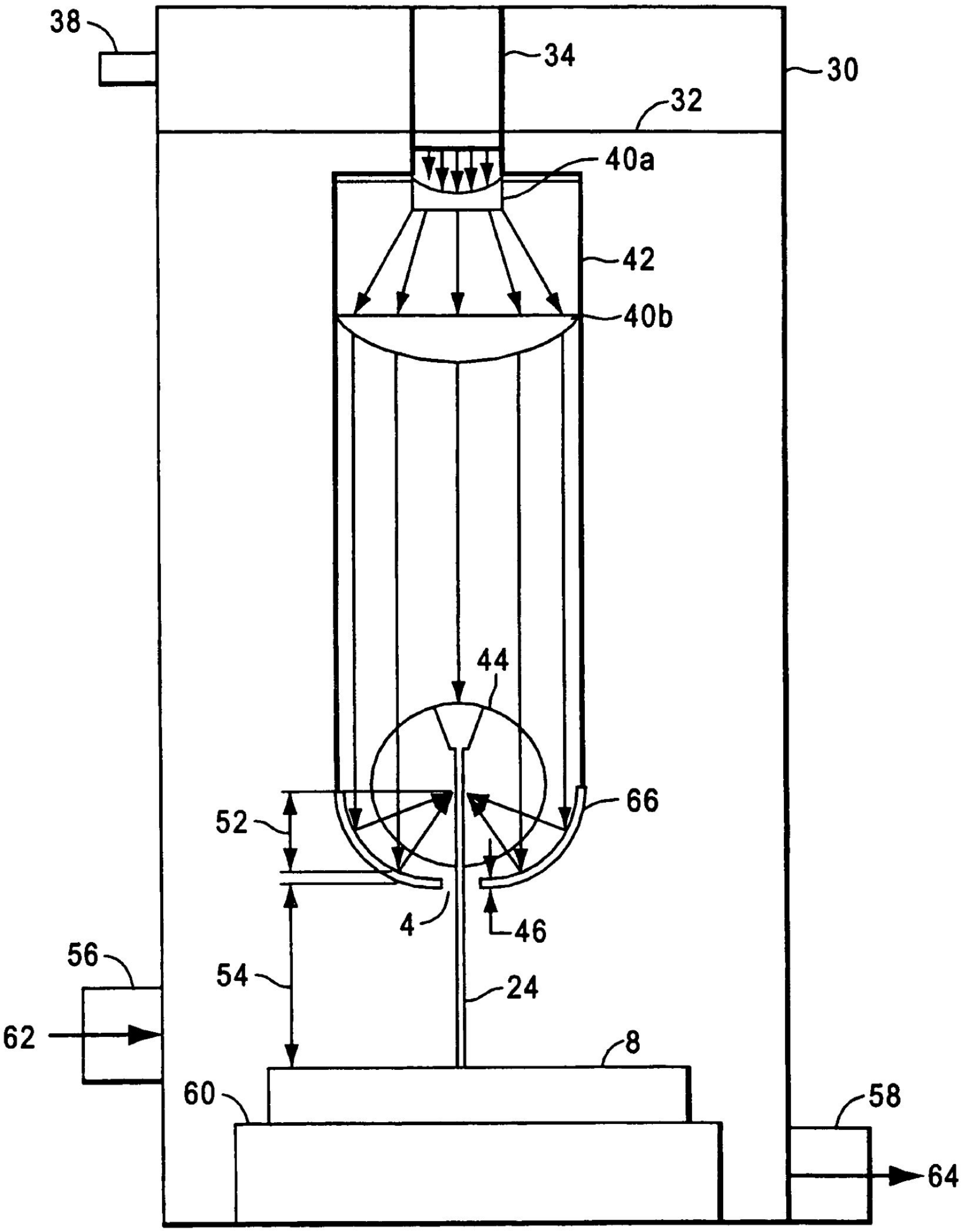

Automotive Hydrogen/Water

Inventor: Otto Bernauer. Patent № 4226213 "Internal combustion engine" – 1980

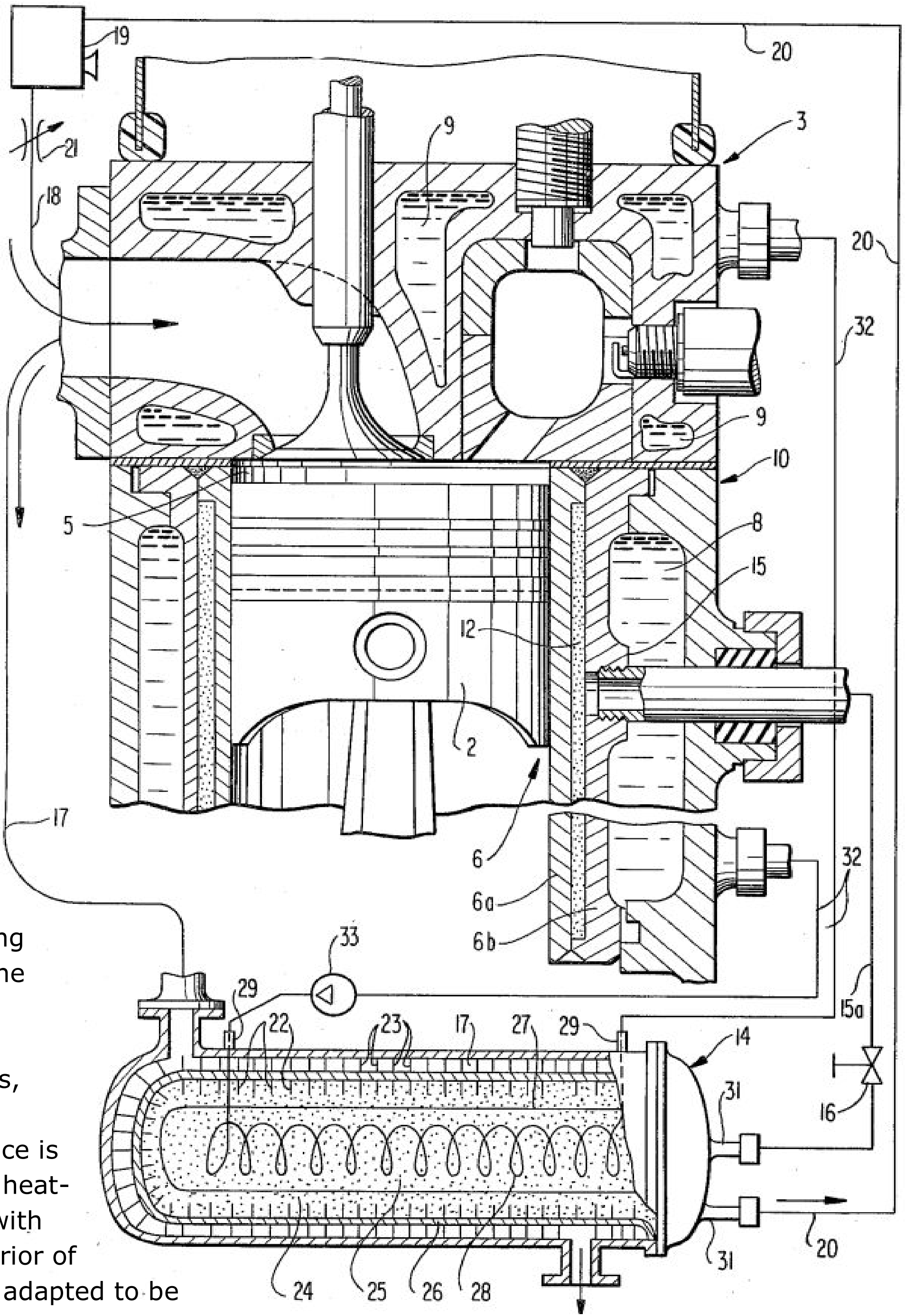

An internal combustion engine with walls delimiting the working space or spaces of the internal combustion engine, in which a hydrogen-impervious, encapsulated metal hydride storage device is provided which is in heat-conducting contact with these walls; the interior of the encapsulation is adapted to be selectively connected to a source of hydrogen and/or to a separate further hydrogen storage device.

Inventor: Walter Drabold. Patent № 1876879 "Charge-forming apparatus for internal combustion engines" – 1932

DESCRIPTION (abridged): [Invention's] object is to employ means commonly used for other purposes in engine operation, for producing a gas for combination with the usual charges comprising hydrocarbon vapor and air, and to provide additional gases otherwise derived, for introduction into the carbureted air stream for further varying the character of the combustible gases introduced into the engine cylinders.

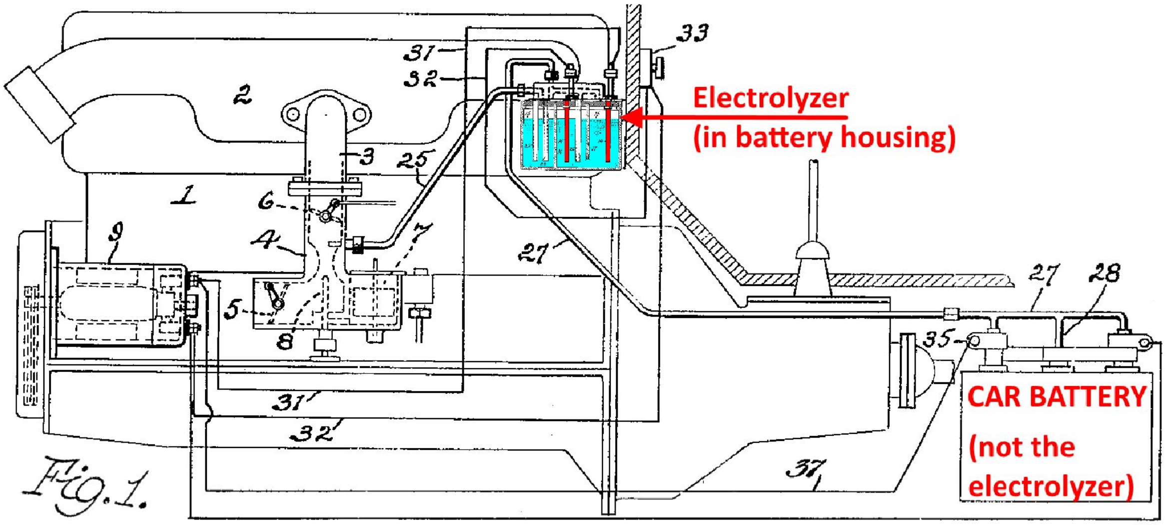

Electrolyzer (in battery housing)

CAR BATTERY (not the electrolyzer)

Fig. 1.

Decades later, Daniel Dingel's Waterfuel device similarly resembled a 12-volt battery

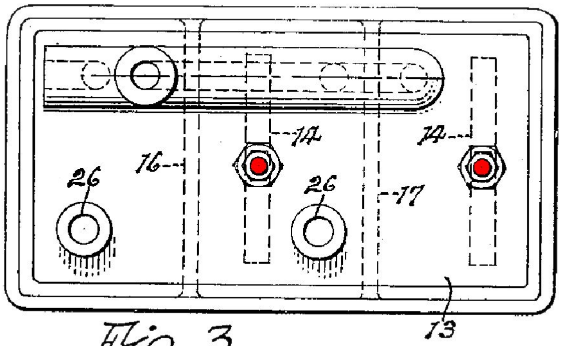

Fig. 3.

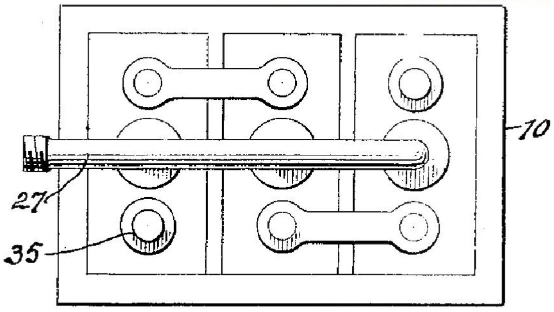

Fig. 5.

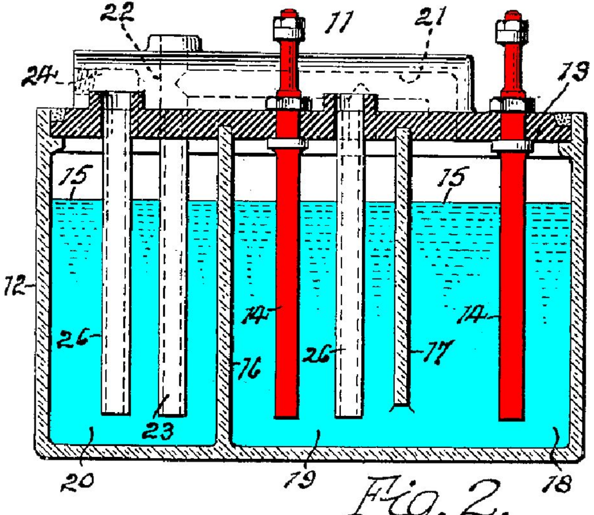

Fig. 2.

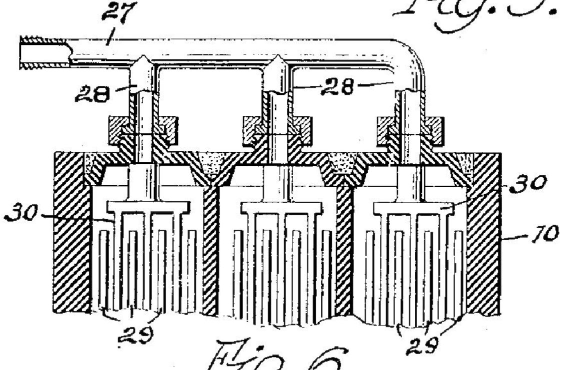

Fig. 6.

--- The gases from the battery ***{"Fig.2" - the colored section in the drawing}*** contain a large percentage of hydrogen and oxygen, as do also those liberated by the decomposition of water, and therefore, the percentage of oxygen in the final charge is greatly increased at certain engine speeds, and is in condition to take up or react with the hydrocarbon content [of the fuel].

Inventor: Kenneth McClure. Patent № 4185593 "Transformation of electrical energy to physical energy" – 1980

An improved means and process for providing for the removal of hydrogen from a catalytic cathode means whereby the hydrogen may be recombined with oxygen to provide explosive force to power an internal combustion engine.

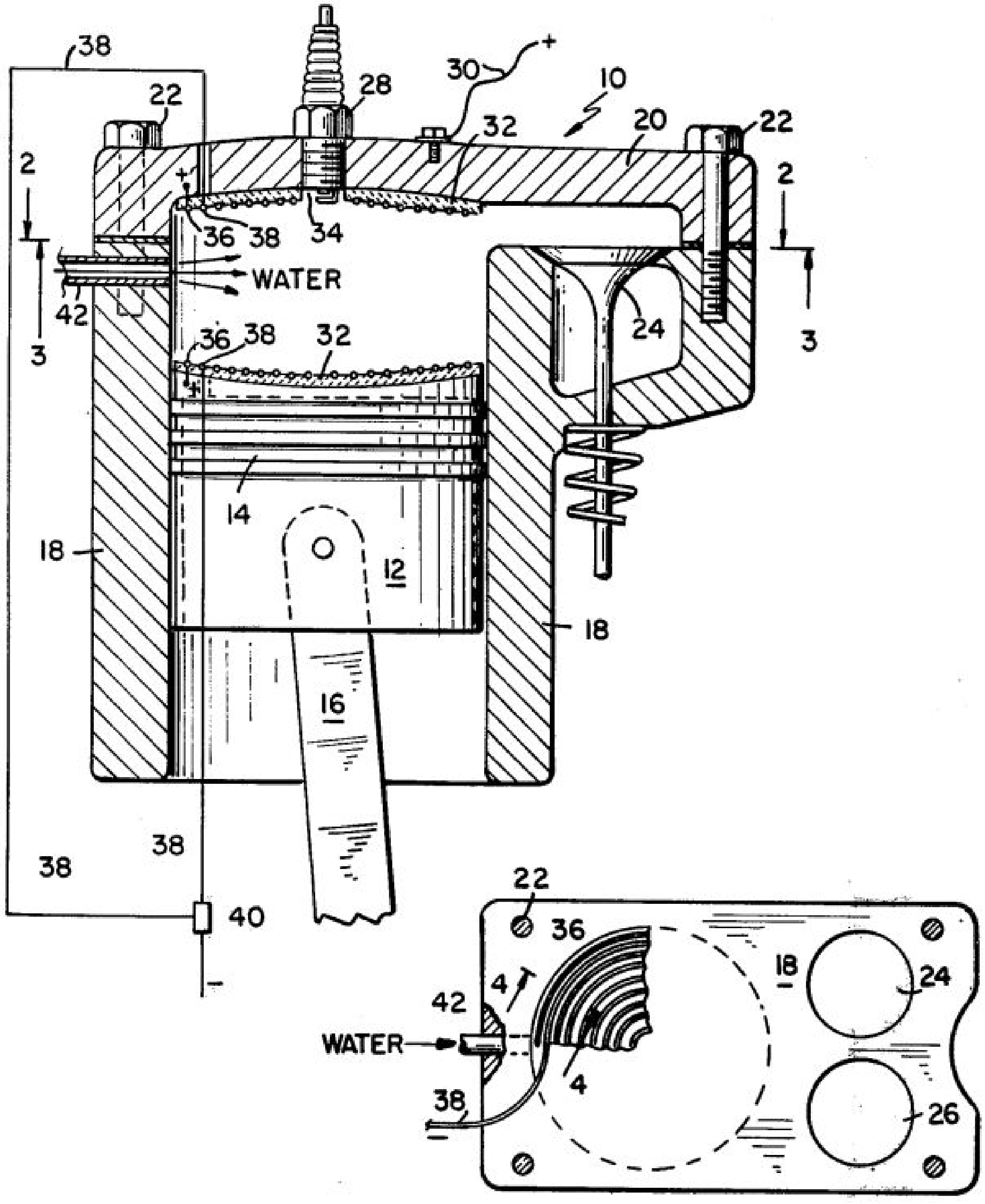

Inventor: **Charles H. Garrett**. Patent № 2006676
“Electrolytic Carburetor” – 1935

PATENT ABSTRACT: This invention relates to carburetors and it has particular reference to an electrolytic carburetor by means of which water may be broken up into its hydrogen and oxygen constituents and the gases so formed suitably mixed with air.

DESCRIPTION BY PATRICK KELLY: Charles Garrett…shows some impressive details. Firstly, he generated an extra electrical input by fitting a second (6 Volt) alternator to his car. While the drawing shows the applied voltage swapping over in polarity, this was not done rapidly, just occasionally to even up any deterioration of the electrodes.

He maintained the water level in the electrolysis chamber with a neat carburetor-style float and pin valve arrangement. He improved the electrolysis by introducing a perforated tube below the electrode plates which allows the engine to suck air up past the plates. This cools the electrolyte (water with a few drops of hydrochloric acid) introduces water vapor to the gas mix and dislodges any bubbles on the plates, without the need for any extra mechanical device. Considering that he did this seventy-five years ago, it is an impressive piece of work. Please note that while only five electrode plates are shown in the diagram, in reality it is probable that many such plates were used since the gas volume is directly proportional to the plate area.

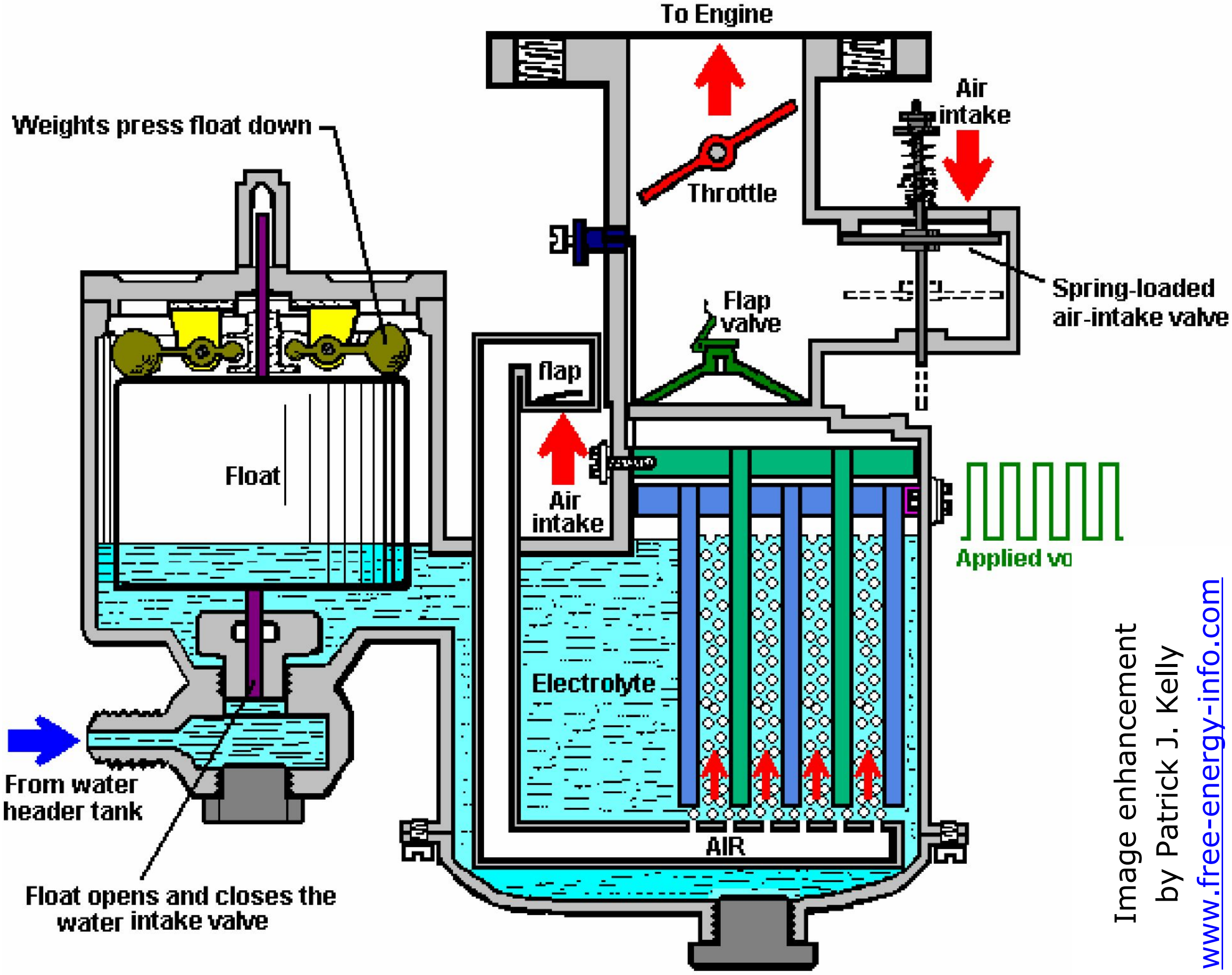

Image enhancement by Patrick J. Kelly www.free-energy-info.com

Inventor: Joseph M. Valdespino.
Patent № 4271793 "Internal combustion engine" – 1981

An improvement to an internal combustion engine having a fuel system for feeding a fuel-air mixture to the combustion chambers and an electrical generation system, such as an alternator. An electrolytic cell is attached adjacent to the engine to generate hydrogen and oxygen upon the application of a voltage between the cathode and anode of the electrolytic cell. The gas feed connects the electrolytic cell to the engine fuel system for feeding the hydrogen and oxygen to the engine combustion chambers. Improvements include placing the electrolytic cell under a predetermined ***pressure to prevent the electrolyte from boiling*** off, a ***cooling system*** for the electrolytic cell and safety features.

In my view, the interesting aspect of this Patent is that an electrolytic cell is described as if it was part of the engine, it's even regarded as if it was a NEW TYPE OF ENGINE as also indicated by the Patent's very title.

As part of full cell/engine integration, the electrolytic cell is also water-cooled by the engine cooling system. (~Ozzie)

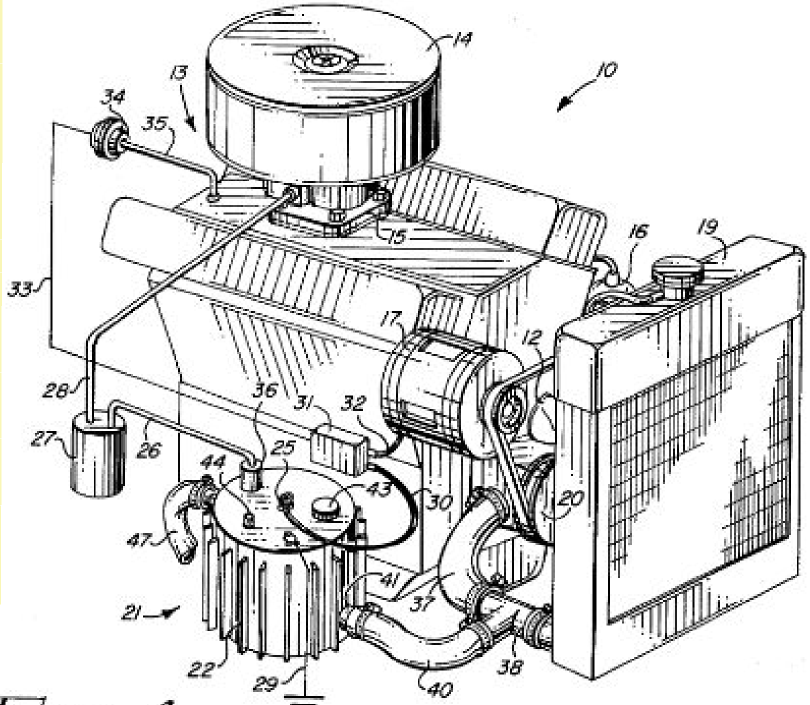

FIG. 1

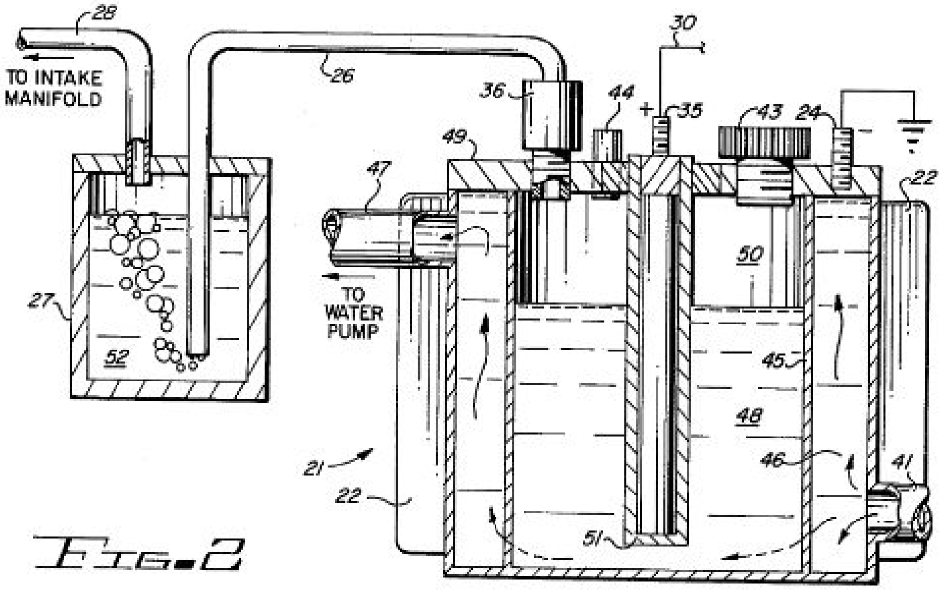

FIG. 2

Inventor: Weldon E. Reinhardt. Patent № 4368696 "Electrolytic supplemental fuel generation for motor vehicles" – 1983

A combination internal combustion engine and electrolyzer for producing hydrogen and oxygen gases from water on board a motor vehicle in order to supplement the gasoline fuel for the engine further includes a heat activated engine such as a Stirling engine to provide the electrical current necessary to decompose the water, the Stirling engine being activated directly from heat derived from the exhaust of the internal combustion engine. The oxygen and hydrogen gases formed by the electrolysis of water are passed to the air intake of the carburetor of the internal combustion engine and enable the use of a much leaner gasoline to air mixture to run the engine thus increasing gas mileage and reducing air pollutants formed by the internal combustion engine.

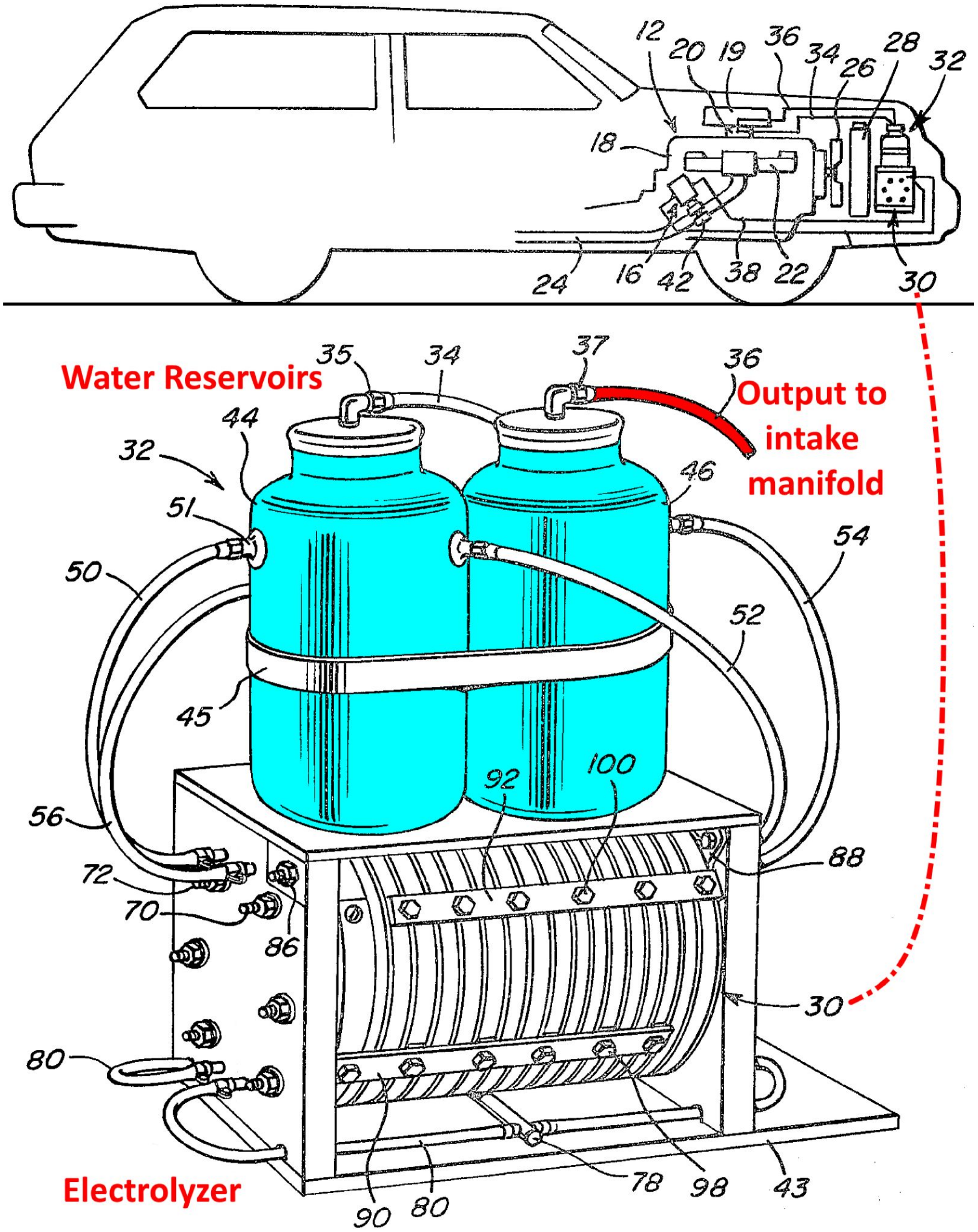

Inventor: Ernesto Gonzalez.
Patent № 4332219 "Electrocombustion engine" – 1982

A reciprocating motor, comprising: a piston/cylinder assembly, having an input/output port; an electrolytic cell for generating a combustible mixture of hydrogen and oxygen gases, the cell being connected to the input/output port of the piston/cylinder assembly; and, means for igniting the combustible mixture in the cylinder, the piston being first driven outwardly by the force of the exploding gas mixture, and immediately afterward, ***being pulled back by a vacuum formed when the exploded gas mixture recombines into a trace amount of water, whereby a single charge of the combustible gas mixture achieves a double power stroke.***

Here again, the electrolytic cell is described and regarded as if it was **part of the engine,** ***also indicated by the Patent's very title. (~Ozzie)***

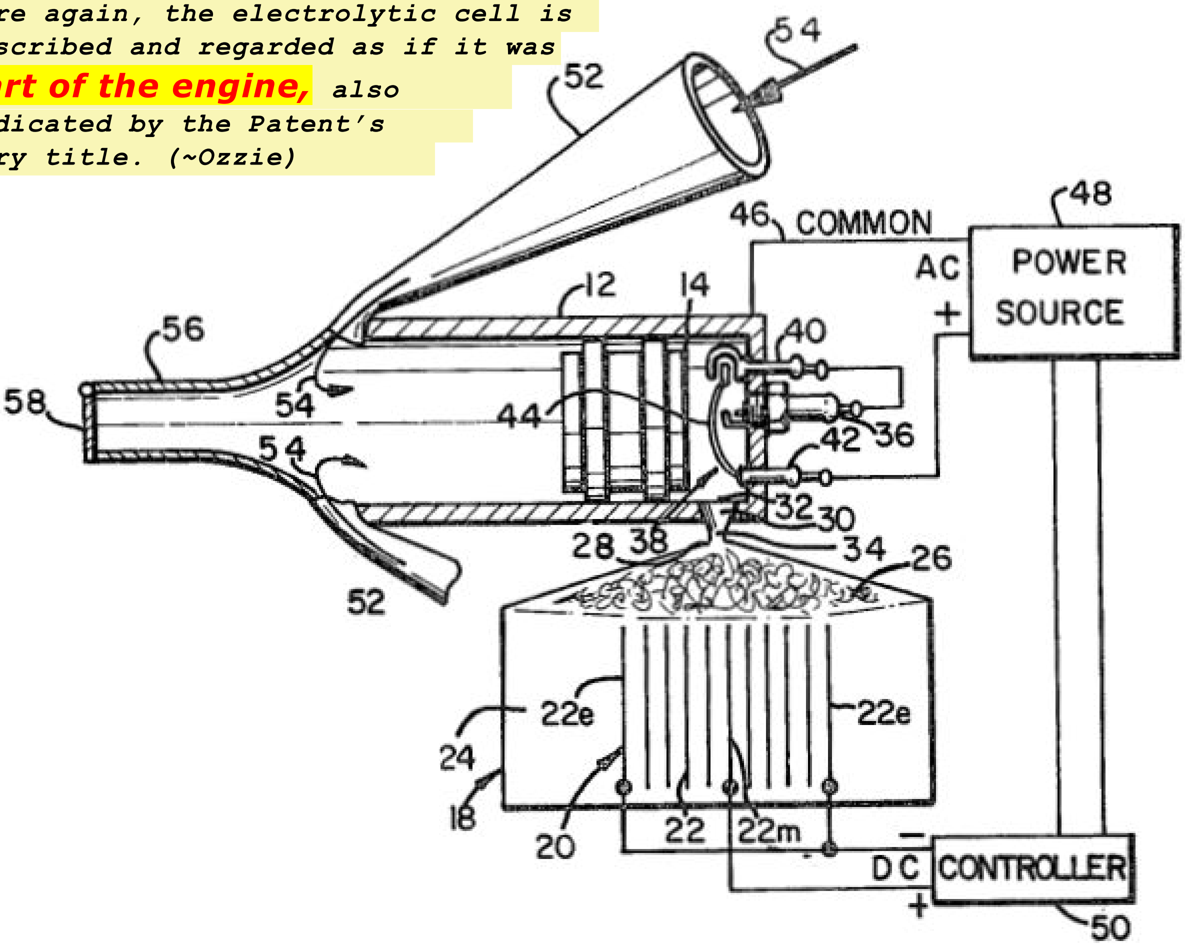

The input/output port is preferably funnel shaped, the larger end being directed into the cylinder, and the smaller end being directed into the electrolytic cell. The electrolytic cell utilizes sets of bipolar electrodes in the form of laminated panels having a wrap-around overlapping border. A free-wheeling piston can be utilized to drive a pump. A crank-shaft arrangement can be utilized to translate the reciprocating motion into rotary motion.

The electrolytic cell is provided with an integral backfire arrestor in the form of mesh material disposed between the electrodes and the outlet of the cell. The trace amounts of water, formed by the recombination of the hydrogen and oxygen gases, is recycled to the cell through the input/output port.

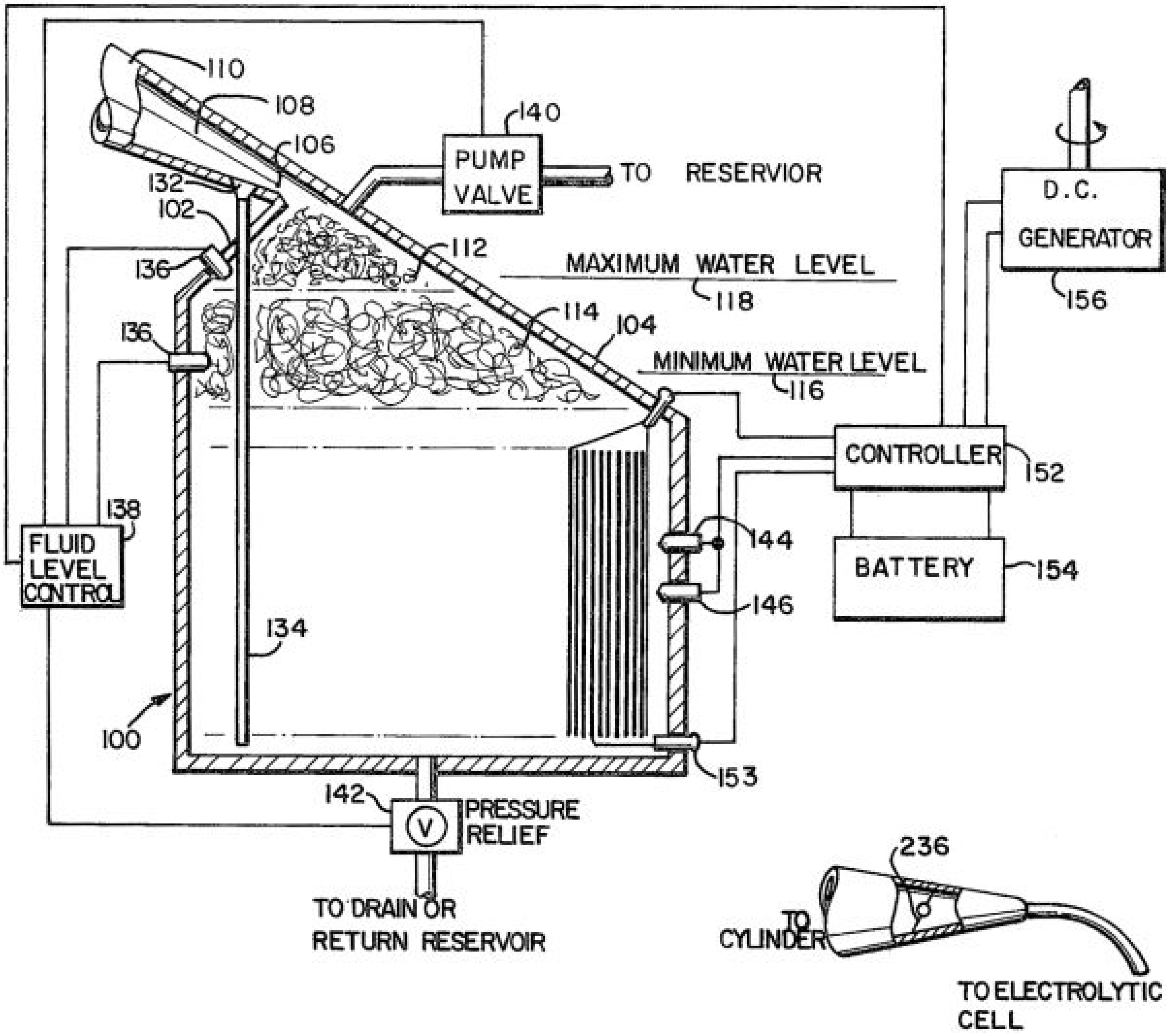

Inventors: George Shoaf and David Pearson. Patent № 4361474 "Electrolysis chamber for hybrid fuel system" – 1982

Disclosed herein is a hybrid fuel system for an engine which normally operates on fuel such as kerosene, gasoline, propane or the like and is adapted to be used in conjunction with the traditional fuel at selected times during the running of the engine. The system includes an electrolysis chamber provided with a fluid inlet and outlet, a pipe disposed within the chamber to allow the metered dispensing of a portion of the fluid contained within the pipe to an electrolysis area in such a manner that the dissociation of the fluid into its elemental components occurs quite readily.

The configuration of the electrolysis area is such that remigration of the elemental components is extremely unlikely, and to this end ***an angled roof having faces which meet at an area above the pipe cause the elements to be separated and migrate on separate faces of the roof*** and thereafter to an opening which communicates with a conduit for admission of the elemental components into the engine. A cooling device is employed which utilizes a portion of the fluid not dispensed into the electrolysis area. Various controls and monitors are provided to assist in the selective deployment of the hybrid fuel system.

The "ANGLED ROOF"

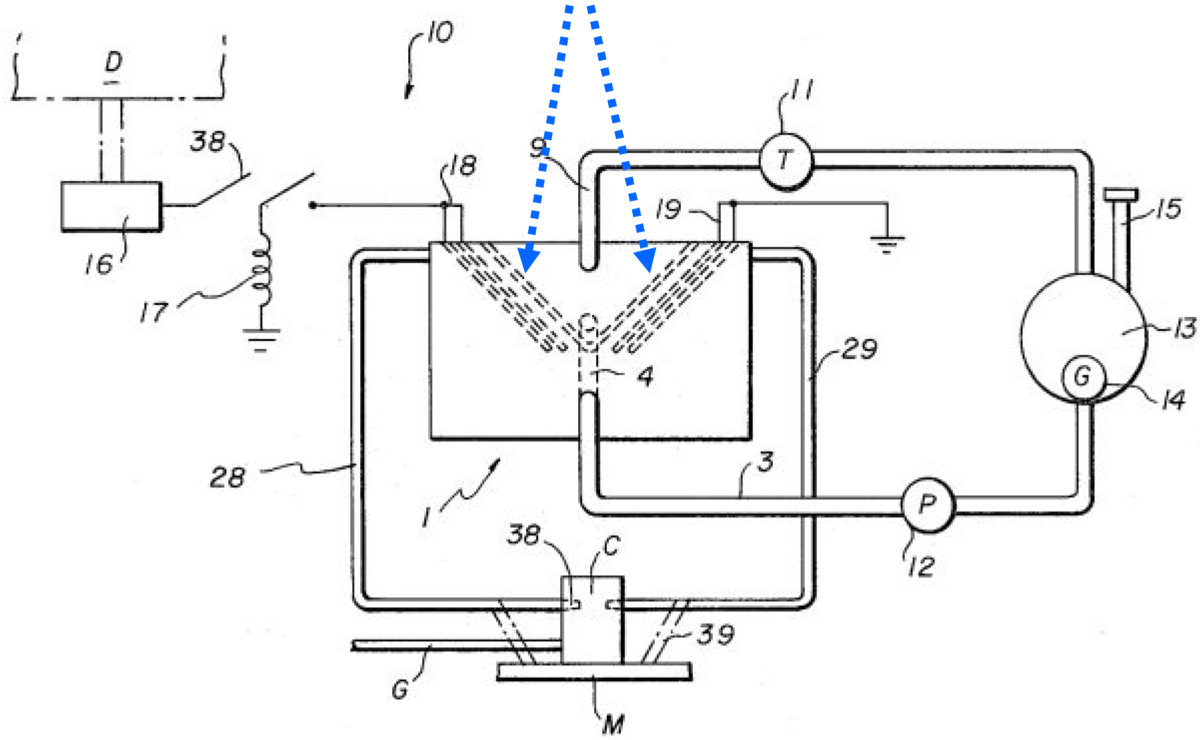

Inventor: John Munday. Patent № 5143025 "Hydrogen and oxygen system for producing fuel for engines" – 1992

A water to fuel production apparatus including a tank divided into compartments for producing hydrogen in one compartment and oxygen in another compartment, where the gases produced do not contact each other in the compartments or until they are mixed prior to entering an internal combustion engine. A control system including cathodes and anodes in the compartments and a switching system to turn individual cathodes and anodes on or off.

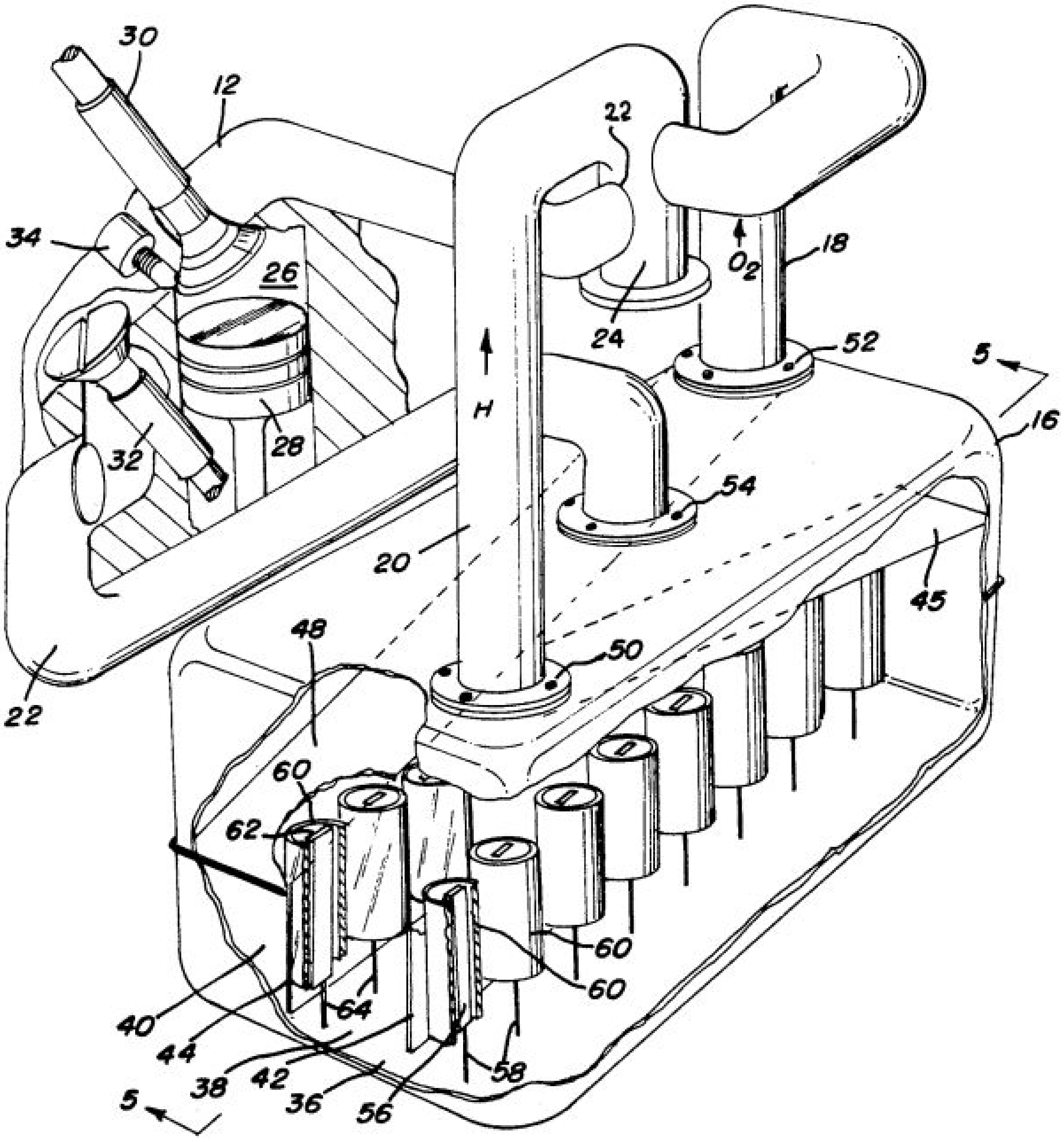

Inventor: Shu Lee (Taiwan). Patent № 7043918
"Environment-friendly engine system" – 1992

An environment-friendly engine system is characterized by that hydrogen gas that fuels the engine is generated from water by electrolysis and that the electric power for electrolysis is supplied by a fuel cell in a ***water fuel*** tank and a lead acid cell connected in parallel with the fuel cell. As the engine system is operating, the fuel cell burns methyl alcohol or ethyl alcohol to generate power for activating water electrolysis that produces hydrogen gas.

The hydrogen gas fuels a hydrogen engine, and the steam produced in the engine is used to drive an electricity generator and subsequently a turbine, whereby the electricity is stored in a lead acid cell used together with the fuel cell. Thereby, the engine system is safe to operate and produces no any of the greenhouse gases, truly friendly to the environment.

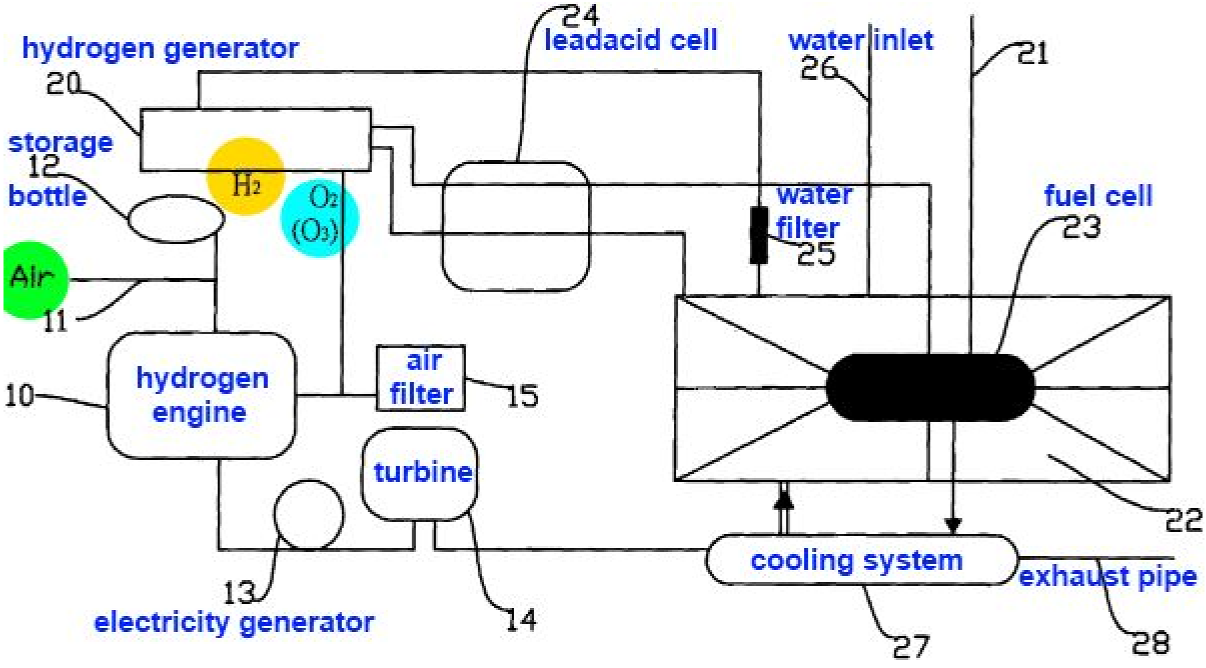

Inventor: Gene Stowe. Patent № 5231954
"Hydrogen/oxygen fuel cell" – 1993

An electrolysis cell is provided for use in connection with a combustion engine, for generating hydrogen and oxygen gases which are added to the fuel delivery system as a supplement to the gasoline or other hydrocarbons burned therein. ***The hazard of explosion of the mixture of generated gases is eliminated by withdrawing the gases through a connection with the vacuum line of the positive crankcase ventilation (PCV) system of the engine and by utilizing a slip-fitted top cap for the electrolysis cell, which cooperates with the PCV vacuum line to prevent explosive containment of generated gases in case of accident. Use of the generated gases as a fuel supplement enables substantial increases in fuel efficiency, while at the same time reducing the emission of pollutants.***

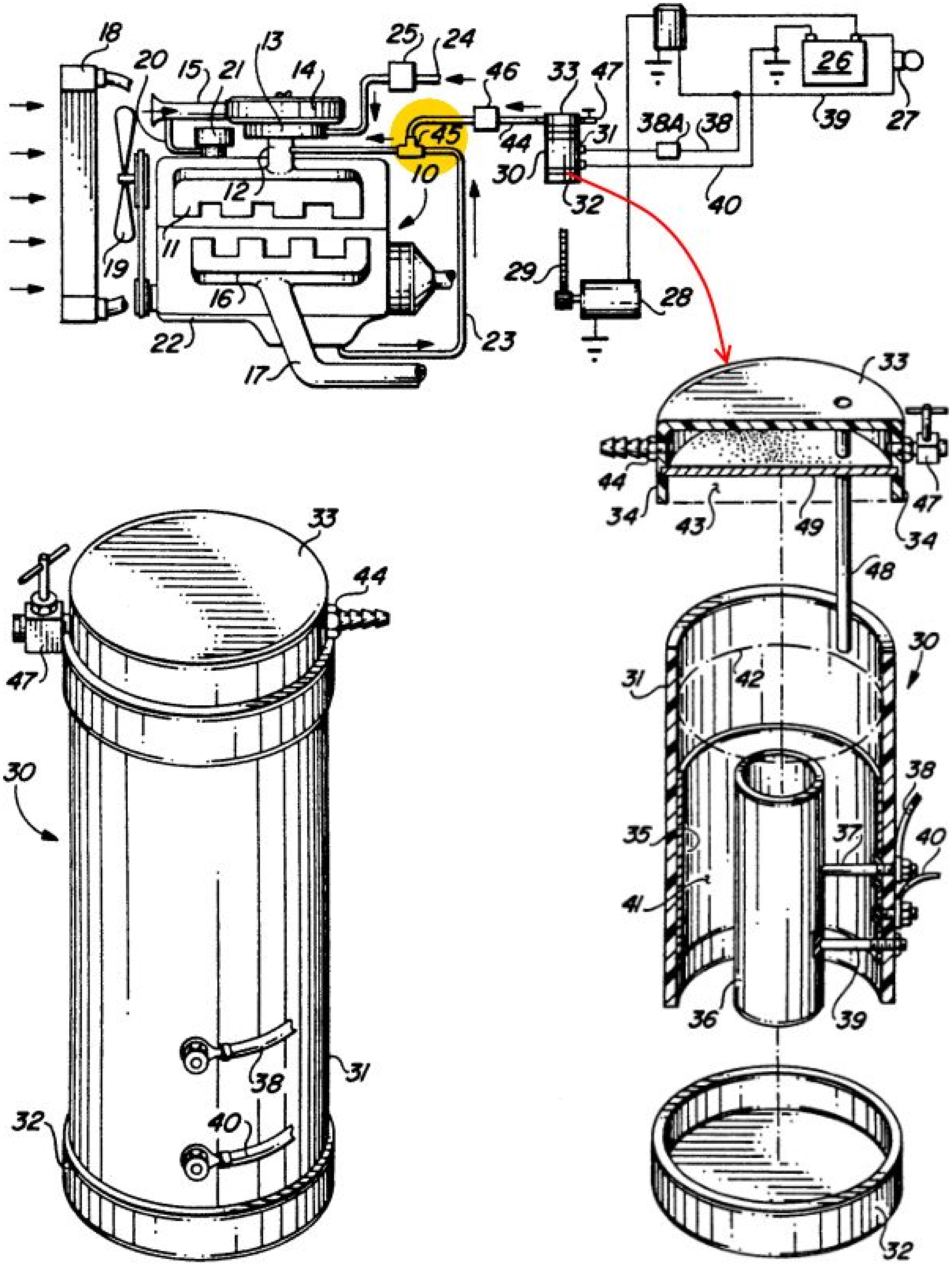
18
20
15
21
13
14
25
24
46
33
47
26
39
27
45
44
31
38A
38
10
12
30
32
40
11
19
29
28
16
22
23
17
33
44
47
34
43
49
34
48
30
31
42
38
35
37
40
41
36
39
32
33
44
47
30
38
31
32
40

Inventor: Jean-Louis Larocque. Patent 6311648. "Hydrogen-oxygen/ hydrocarbon fuel system for internal combustion engine" - 2001

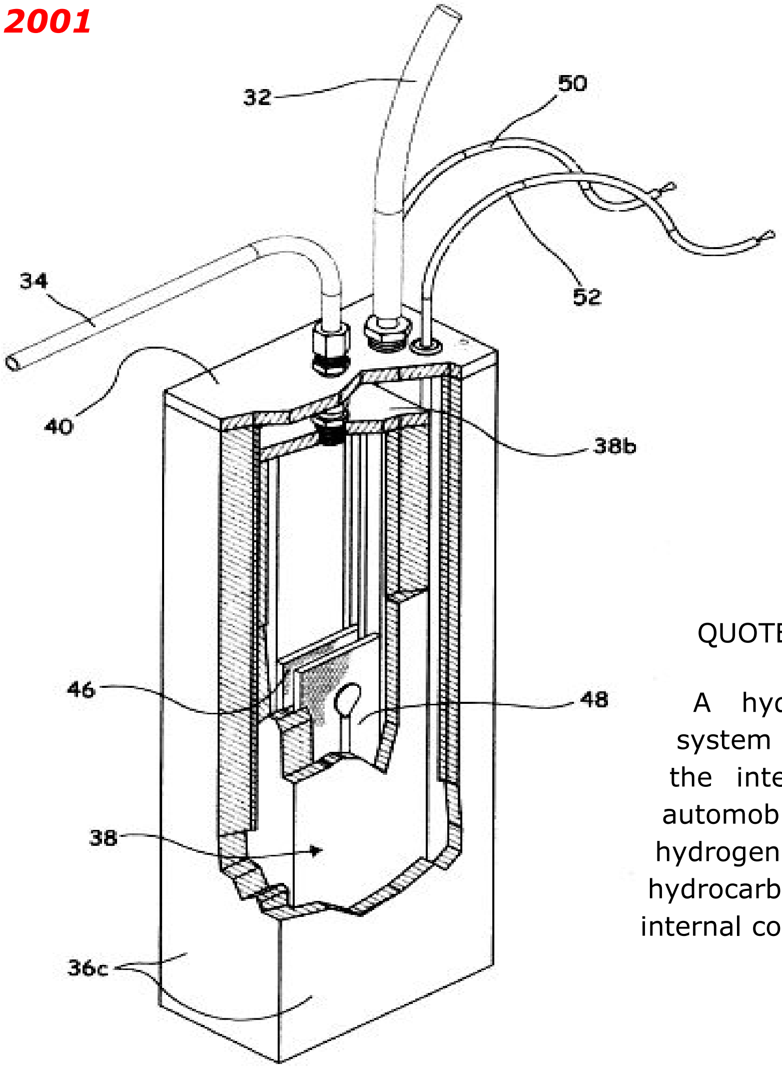

QUOTE:

A hydrogen-oxygen/hydrocarbon fuel system for enhancing the efficiency of the internal combustion engine of an automobile by supplying a mixture of hydrogen and oxygen gases and liquid hydrocarbon fuel to the fuel line of this internal combustion engine.

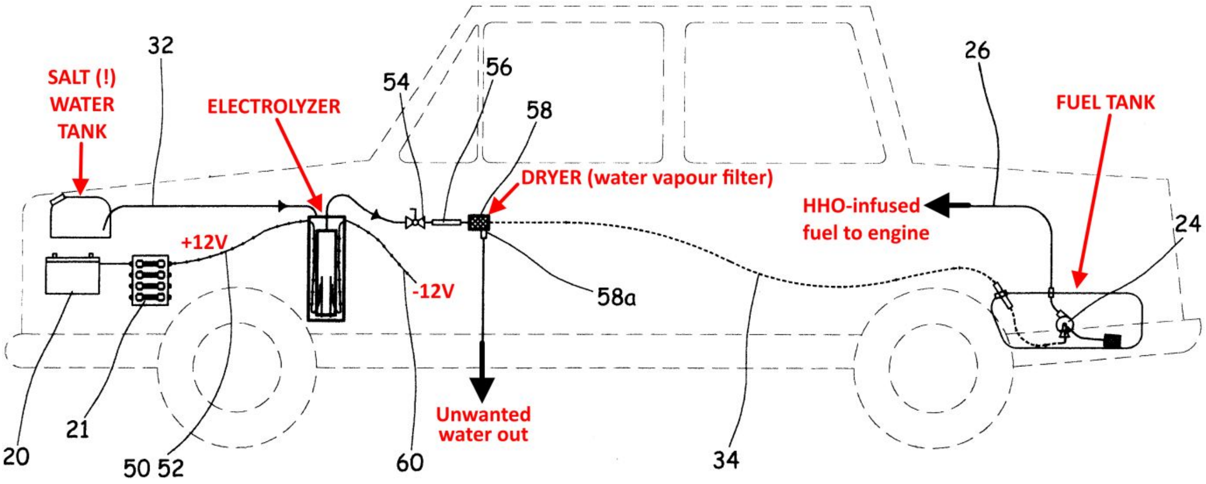

Inventor: Arthur Dungan. Patent № 5385657
"Apparatus for the gasification of water" – 1995

An apparatus and method for generating hydrogen gas by reacting water and an electrode at high temperature, wherein water is delivered under pressure by a pump in communication with a storage facility or tank in a manner forcing the water, at a controlled rate, into a gas tight vessel in which a heated electrode is positioned. An exothermic reaction takes place, whereby the liquid reactant, water, is reduced to hydrogen gas. A conduit in communication with the produced gas outlet of the vessel conducts the hydrogen gas to the predetermined connection for use, whether for combustion in an engine, or for industrial use.

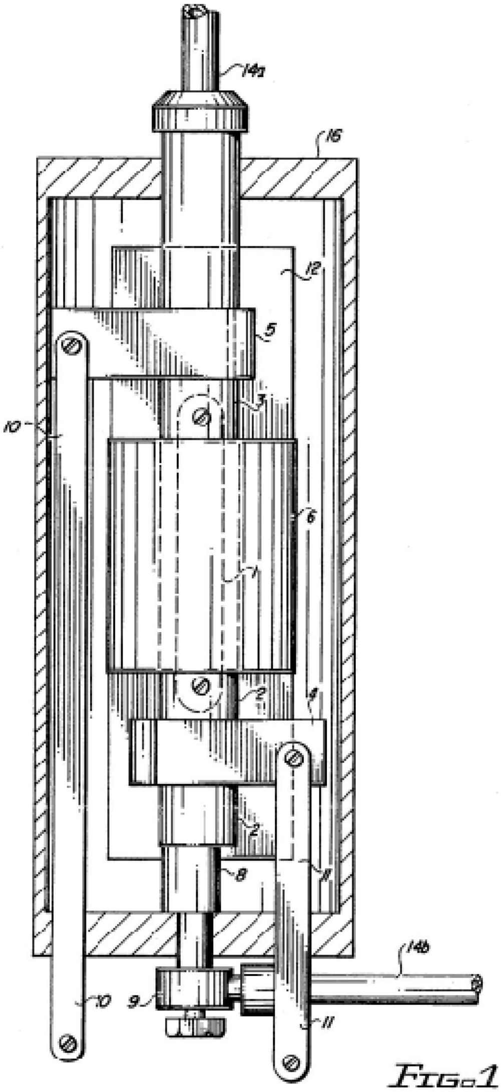

FIG. 1

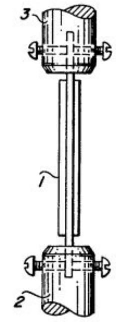

FIG. 3

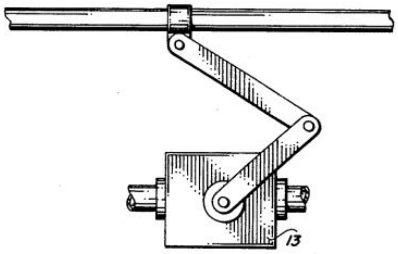

FIG. 6

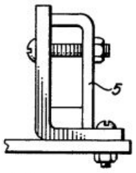

FIG. 4

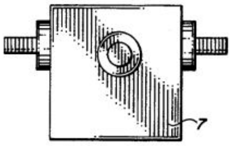

FIG. 7

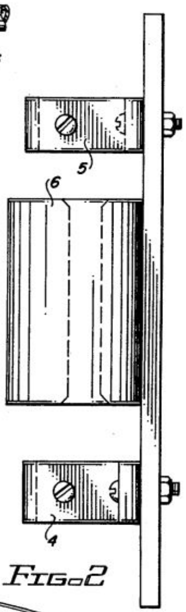

FIG. 2

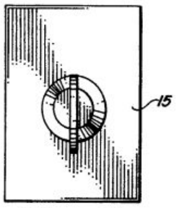

FIG. 5

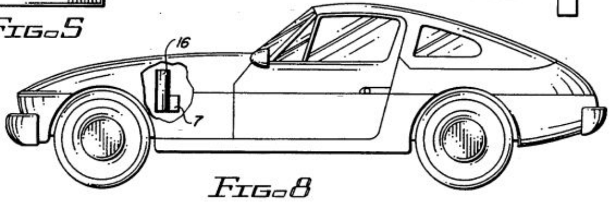

FIG. 8

Inventor: Jack H. Rupe – California Institute of Technology. Patent № 3906913 "System for minimizing internal combustion engine pollution emission" – 1975

A mixing device is provided for an internal combustion engine which simultaneously atomizes liquid fuel, mixes this fuel with an optimal quantity of hydrogen and combines this mixture with a prescribed quantity of air. A throttling mechanism controls the fuel delivery to the engine and also limits the fuel to air equivalence ratio to be predetermined upper bound to inhibit the production of air pollutants and to a lower bound which is above the lean flammability of the mixture.

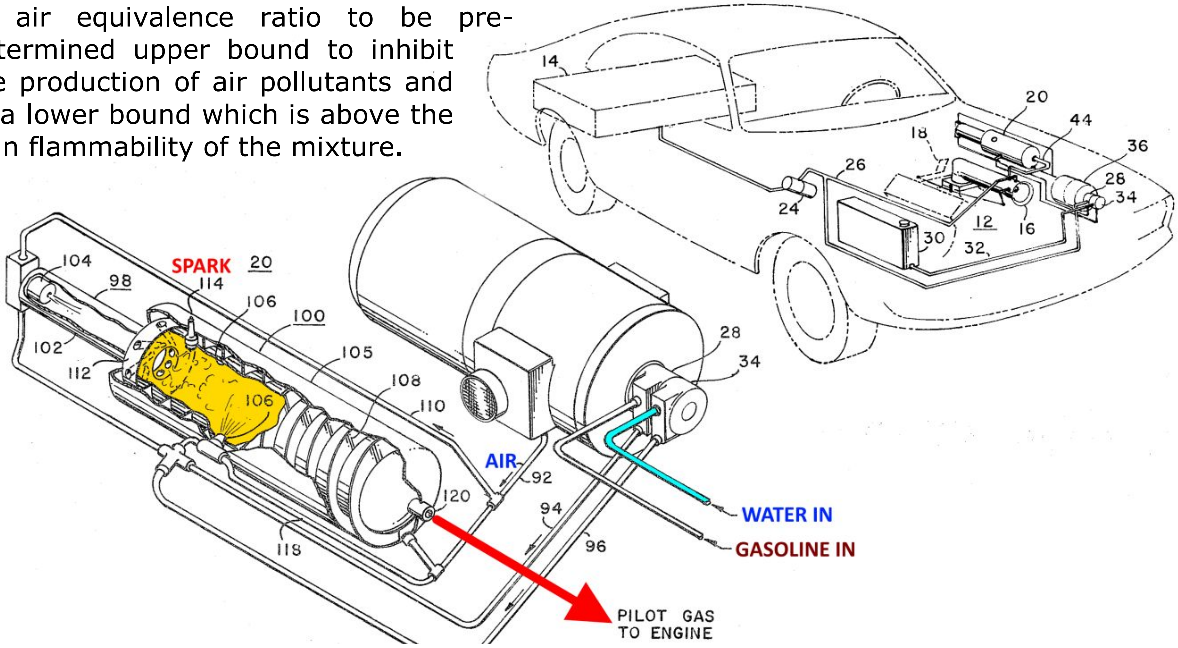

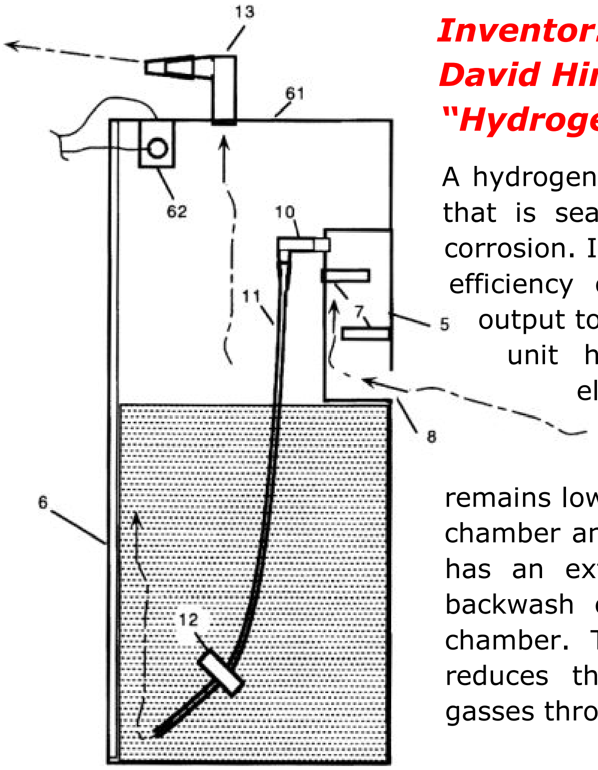

Inventor: J.W. Pettigrew; Gregory Monette David Hirsch. Patent № 5733421 "Hydrogen-oxygen fuel cell" – 1998

A hydrogen-oxygen fuel cell that uses an electrolysis unit that is sealed and has protection from explosions and corrosion. It has a plate structure that produces maximum efficiency of hydrogen production and can adjust the output to better match the needs of a given engine. The unit has an automatic fill system to keep the electrolyte solution at the proper levels for efficient hydrogen production, and the temperature of the electrolysis chamber remains low, thereby reducing the problems of cooling the chamber and the risk of melting the chamber. The device has an extraction chamber that is baffled to prevent backwash of electrolyte solution out of the electrolyte chamber. The device has an explosion preventer that reduces the explosion risk by working the produced gasses through a neutral fluid.

Inventor: Hugh Rose. Patent № 5452688 "Method and apparatus for enhancing combustion in internal combustion engines" – 1995

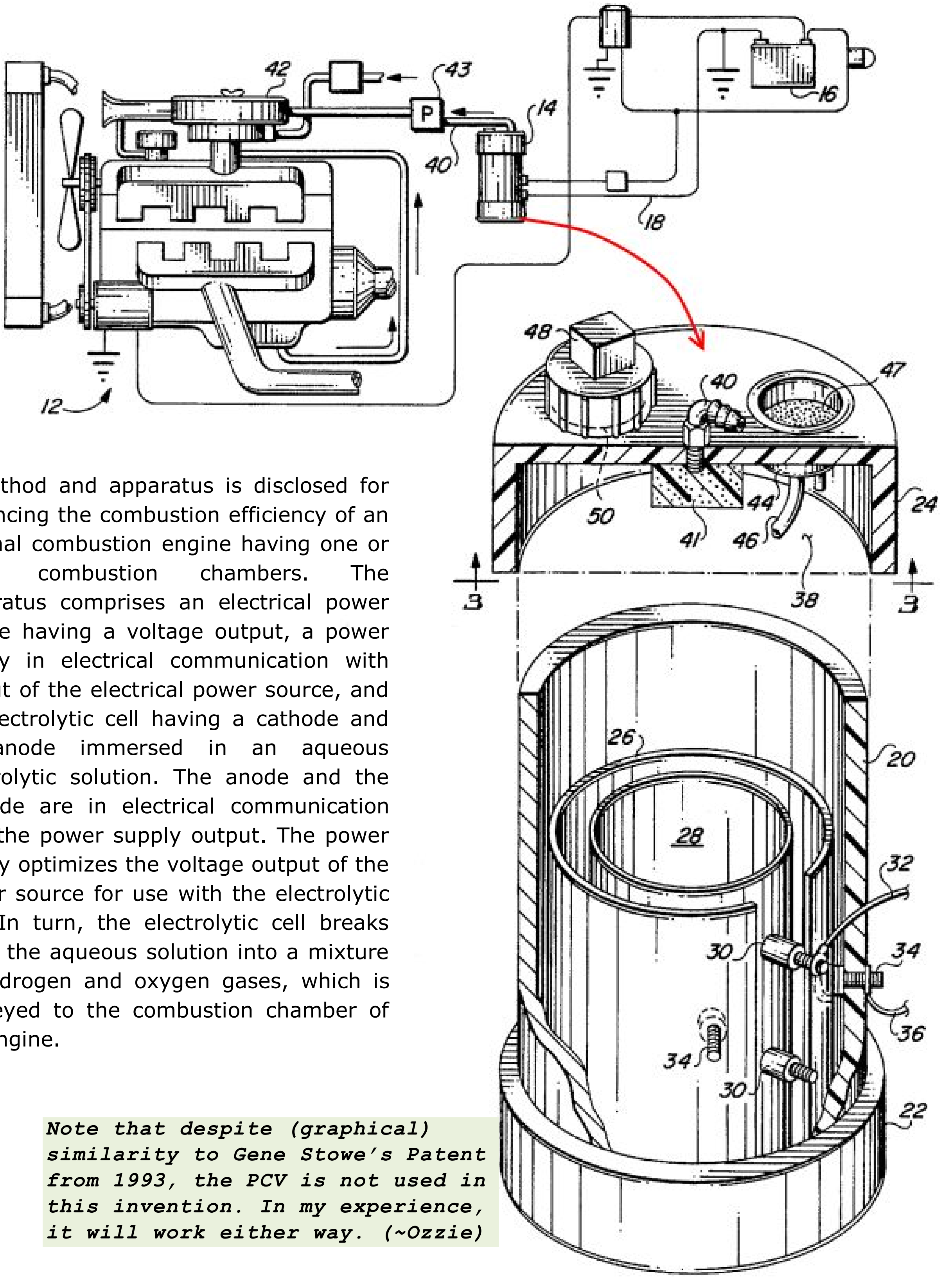

A method and apparatus is disclosed for enhancing the combustion efficiency of an internal combustion engine having one or more combustion chambers. The apparatus comprises an electrical power source having a voltage output, a power supply in electrical communication with output of the electrical power source, and an electrolytic cell having a cathode and an anode immersed in an aqueous electrolytic solution. The anode and the cathode are in electrical communication with the power supply output. The power supply optimizes the voltage output of the power source for use with the electrolytic cell. In turn, the electrolytic cell breaks down the aqueous solution into a mixture of hydrogen and oxygen gases, which is conveyed to the combustion chamber of the engine.

Note that despite (graphical) similarity to Gene Stowe's Patent from 1993, the PCV is not used in this invention. In my experience, it will work either way. (~Ozzie)

Inventors: Steve McFarland and Wilbur Jones.
Patent № 6314918 "Renewable fuel generating system" – 2001

This invention operates with a series of components integrally connected to an internal combustion powered engine, wherein an OEM alternator supplies the various fixed voltage load requirements of the engine and its accessories and additionally works in conjunction with a specifically designed high output electrical power generating device to energize a multiple cell anode and cathode type electrolyzer unit for liberating **hydrogen gas to fuel said internal combustion powered engine at greater than 100% efficiency levels.** Various mechanical and electrical components are incorporated to enhance fuel production, monitor and regulate system efficiency and safety levels, and optimize the performance of this renewable fuel generating system.

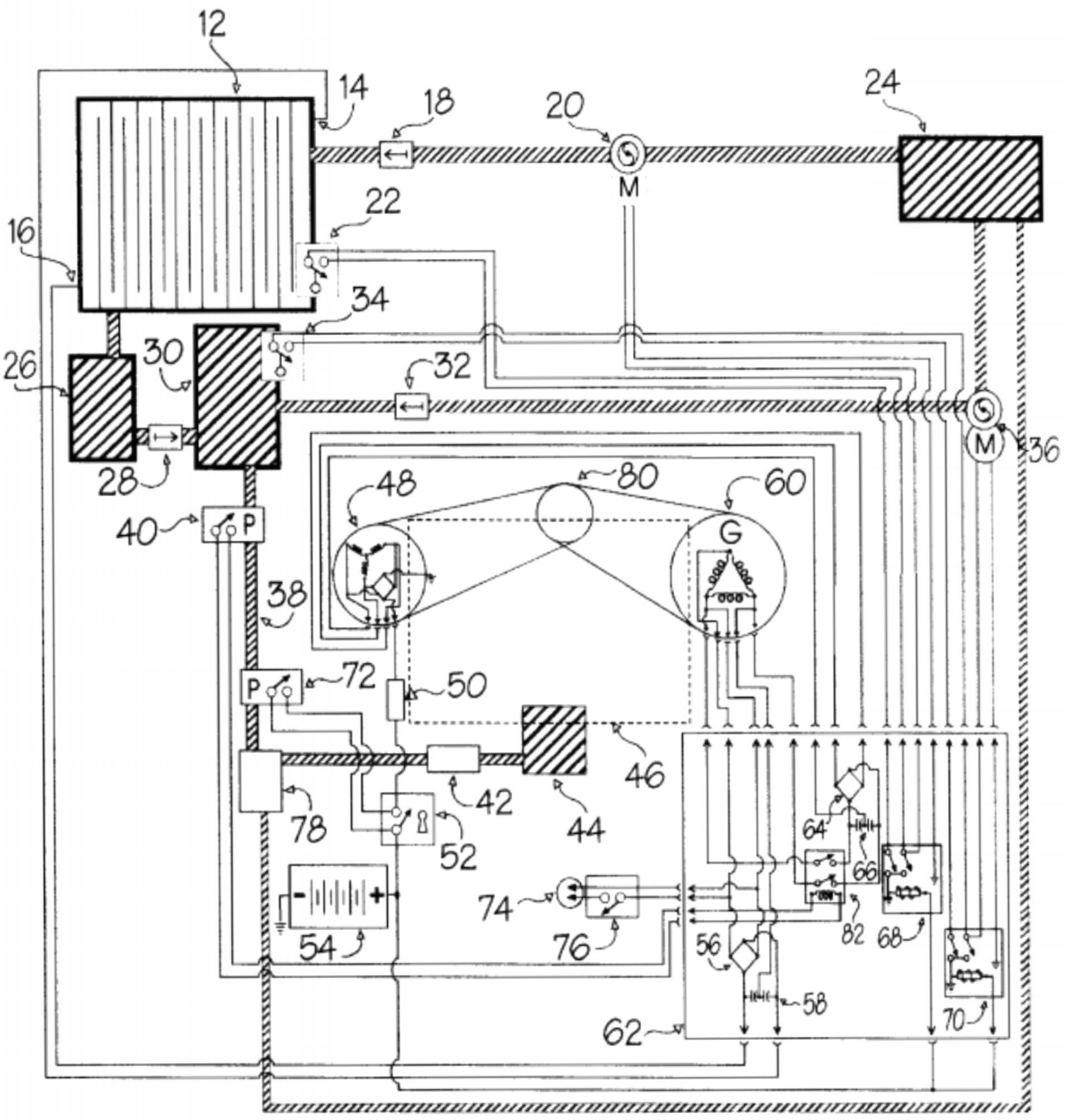

Inventors: James Knowlton & Alan Workman. Patent № 6508210 "Fuel supply system for a vehicle including a vaporization device for converting fuel and water into hydrogen" – 2003

A fuel supply system is disclosed for use with a vehicle propulsion system such as an internal combustion engine or a fuel cell system. The fuel supply system includes a water supply, fuel supply, and fuel conversion device coupled to the water and fuel supplies for generating hydrogen from the water and fuel and supplying the hydrogen to an intake manifold of the propulsion system with which the fuel supply system is used.

The fuel conversion device preferably includes a vaporization chamber, an inlet nozzle for introducing fine droplets of fuel and water into the vaporization chamber, an air inlet for introducing air into the vaporization chamber to create turbulence in the chamber, a heater in the vaporization chamber for heating the turbulent fuel/water mix at temperatures that cause the mix to convert into hydrogen, and an outlet for supplying the generated hydrogen and air to the vehicle propulsion system.

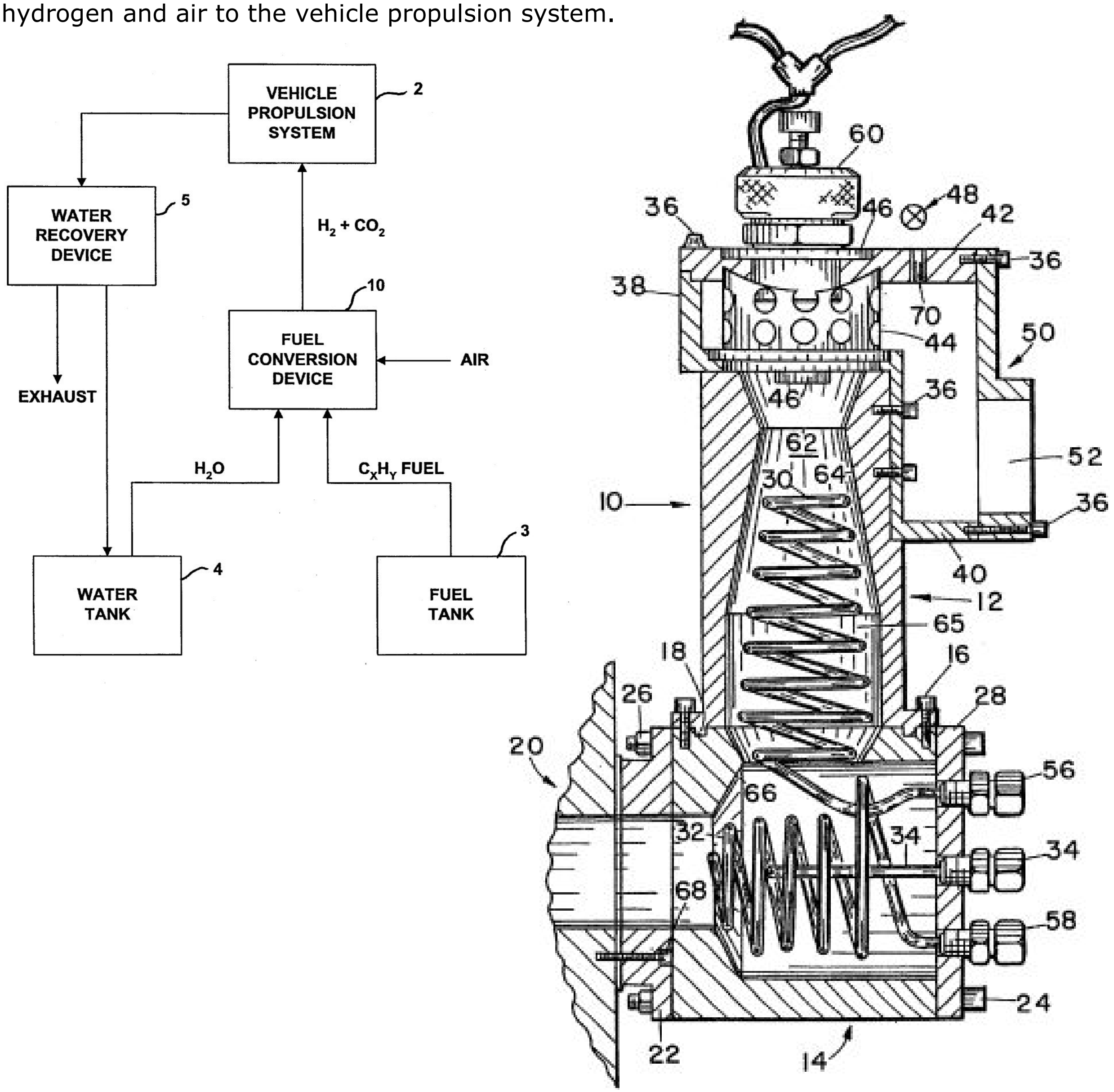

Inventors: John Zagaja, Trent Molter, Lawrence Moulthrop and William Smith. Patent № 6659049 "Hydrogen generation apparatus for internal combustion engines and method thereof" – 2003. Also published as Patent № 6857397 – 2005

A system and method are provided for generating hydrogen for use with an internal combustion engine. The system includes a venturi device coupled with an exhaust stream from the internal combustion engine. The venturi device creates a gas flow through a condenser to generate reactant water. After the reactant water is polished to remove contaminants, hydrogen and oxygen are disassociated using a PEM[153] based electrolyzer. The hydrogen gas is used by the internal combustion engine to assist in the combustion process and reduce pollutant emissions.

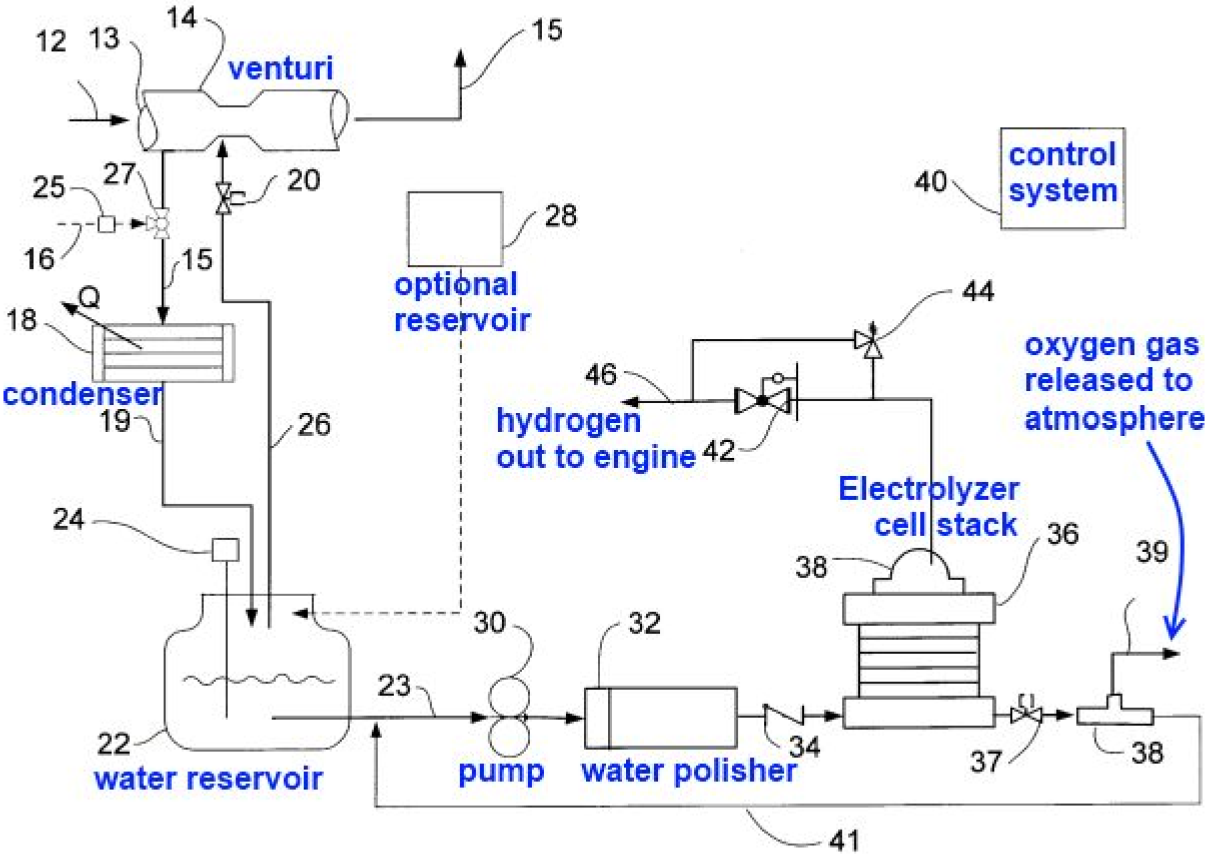

---

[153] Proton Exchange Membrane.

Inventors: James McElroy, Matthias Gottmann, John Finn and Fred Mitlitsky. Patent № 6821663

"Solid oxide regenerative fuel cell" – 2004

A Solid Oxide Regenerative Fuel Cell (SORFC) system stores waste heat from the fuel cell in a heat storage material during the discharge mode. The heat is then used to heat water to be electrolyzed during the charge mode.

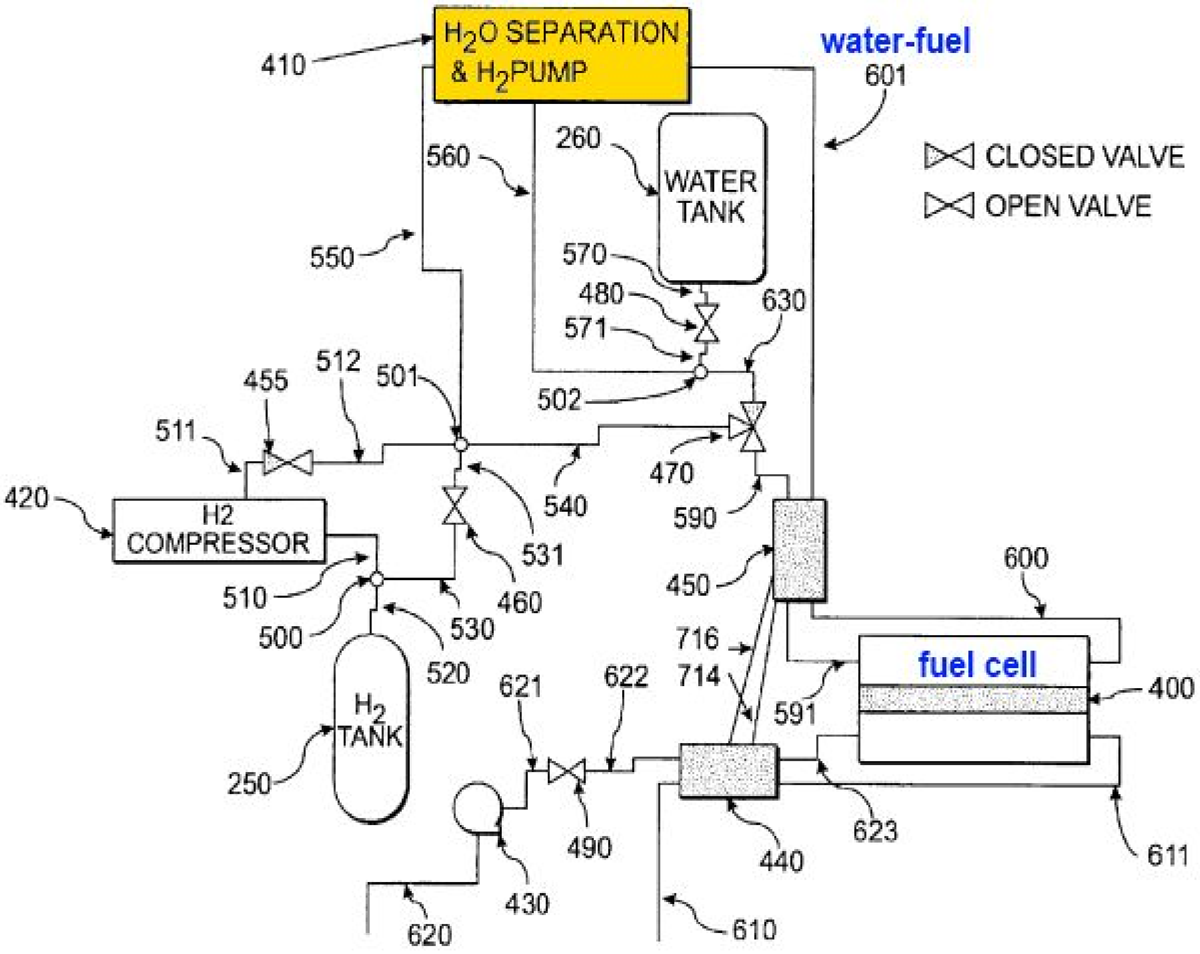

Inventor: Joseph Kejha. Patent № 7036616

"Hydrogen-electric hybrid vehicle construction" – 2006

An electric vehicle which carries at least two passengers, which has at least three wheels, said passengers sitting in tandem and most of the batteries or fuel cell systems are located on the sides of the passengers. The vehicle has an aerodynamically shaped body with substantially reduced frontal area and drag. The body is lightweight, made from shock absorbing materials and structures, and has pressure-airless tires, which enhances the safety of the passengers. The vehicle also includes an advanced **hydrogen-electric hybrid propulsion system** with quick refueling from existing infrastructure and various additional optional features and systems.

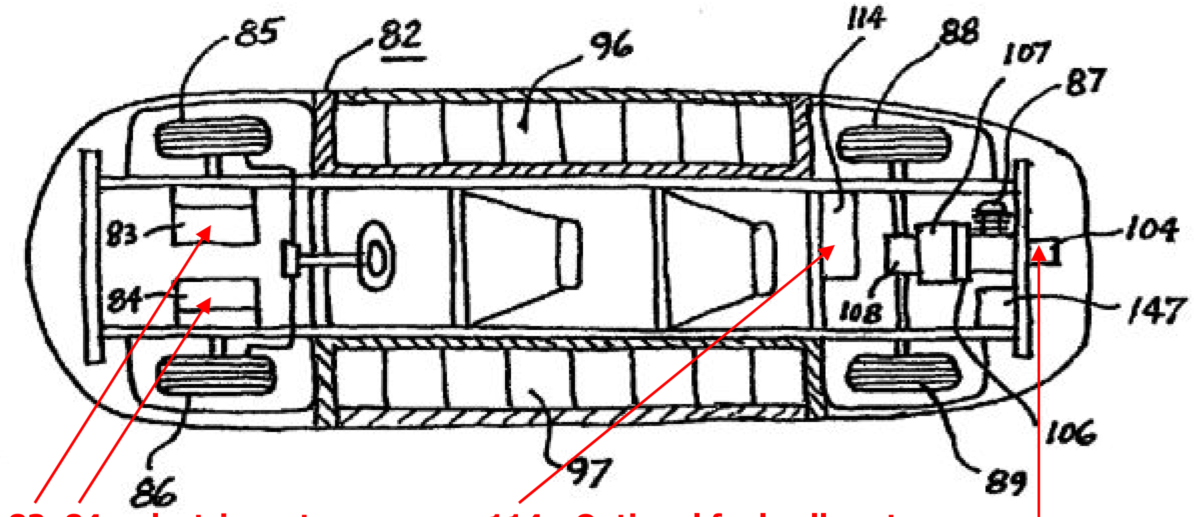

83, 84 - electric motors

114 - Optional fuel cell system

FIG. 12

Generator 104 gives electricity to Electrolyzer 105

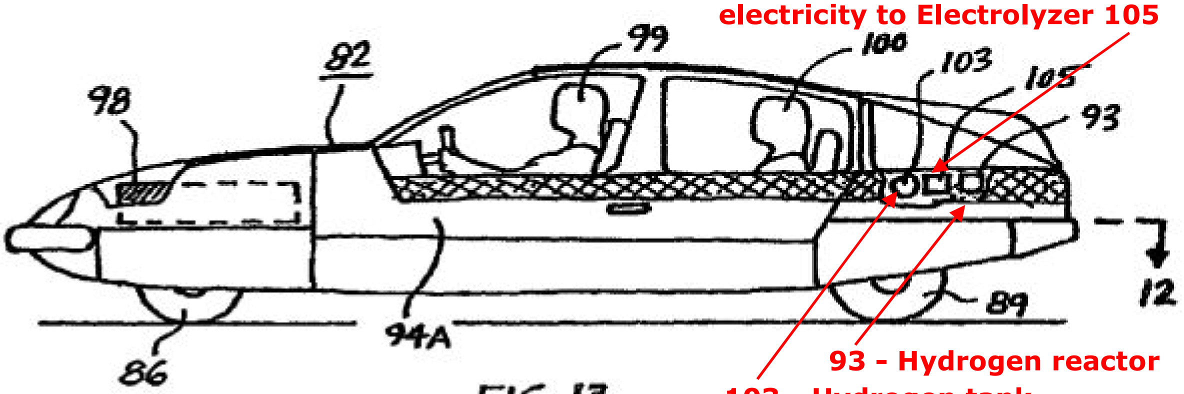

93 - Hydrogen reactor

103 - Hydrogen tank

FIG. 13

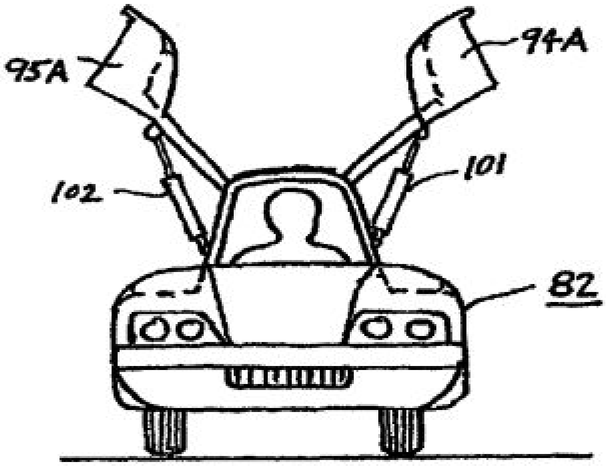

FIG. 14

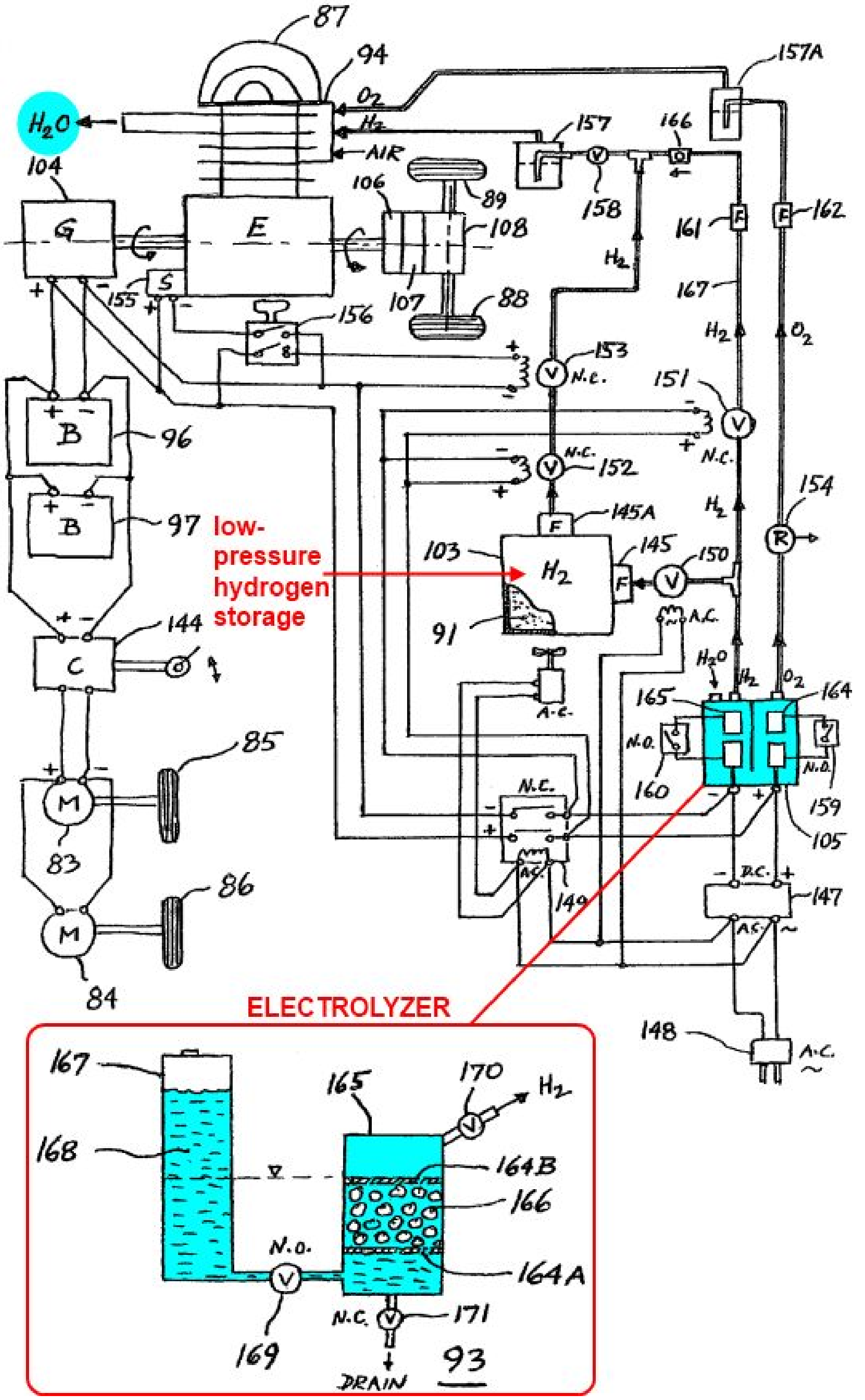
87
94
157A
H_2O
O_2
H_2
AIR
157
166
104
G
E
106
89
108
158
161
F
F
162
H_2
S
155
156
107
88
167
H_2
O_2
153
N.C.
151
N.C.
B
96
152
N.C.
H_2
154
B
97
low-pressure hydrogen storage
103
H_2
145A
F
145
150
F
R
91
A.C.
144
C
A.C.
H_2O
H_2
O_2
165
164
N.O.
160
N.O.
159
105
85
M
83
N.C.
A.C.
149
D.C.
147
A.C.
86
M
84
148
A.C.
ELECTROLYZER
167
165
170
H_2
168
164B
166
N.O.
164A
169
N.C.
171
DRAIN
93

Inventors: Gabi Balan, Donald Johnston, Daniela Balan and Mario De Souza. Patent № 6817320 "Hydrogen generating apparatus and components therefore" – 2004

A hydrogen generating system is provided for use in internal combustion engines for ***increasing the efficiency of the engine and decreasing emissions*** from the engine. The hydrogen generating system has an electrolysis cell for generating hydrogen and oxygen gases by electrolysis of an aqueous solution, a power source for providing electrical power to the electrolysis cell, an outlet flow means for introducing the generated gases into the intake manifold system of an internal combustion engine, a monitoring means for monitoring the operating conditions of the hydrogen generating system, and a control means connected to the monitoring means for controlling the operation of the hydrogen generating system in response to the monitoring means. Various devices and systems are added to facilitate use and overcome previous problems with prior hydrogen generating systems.

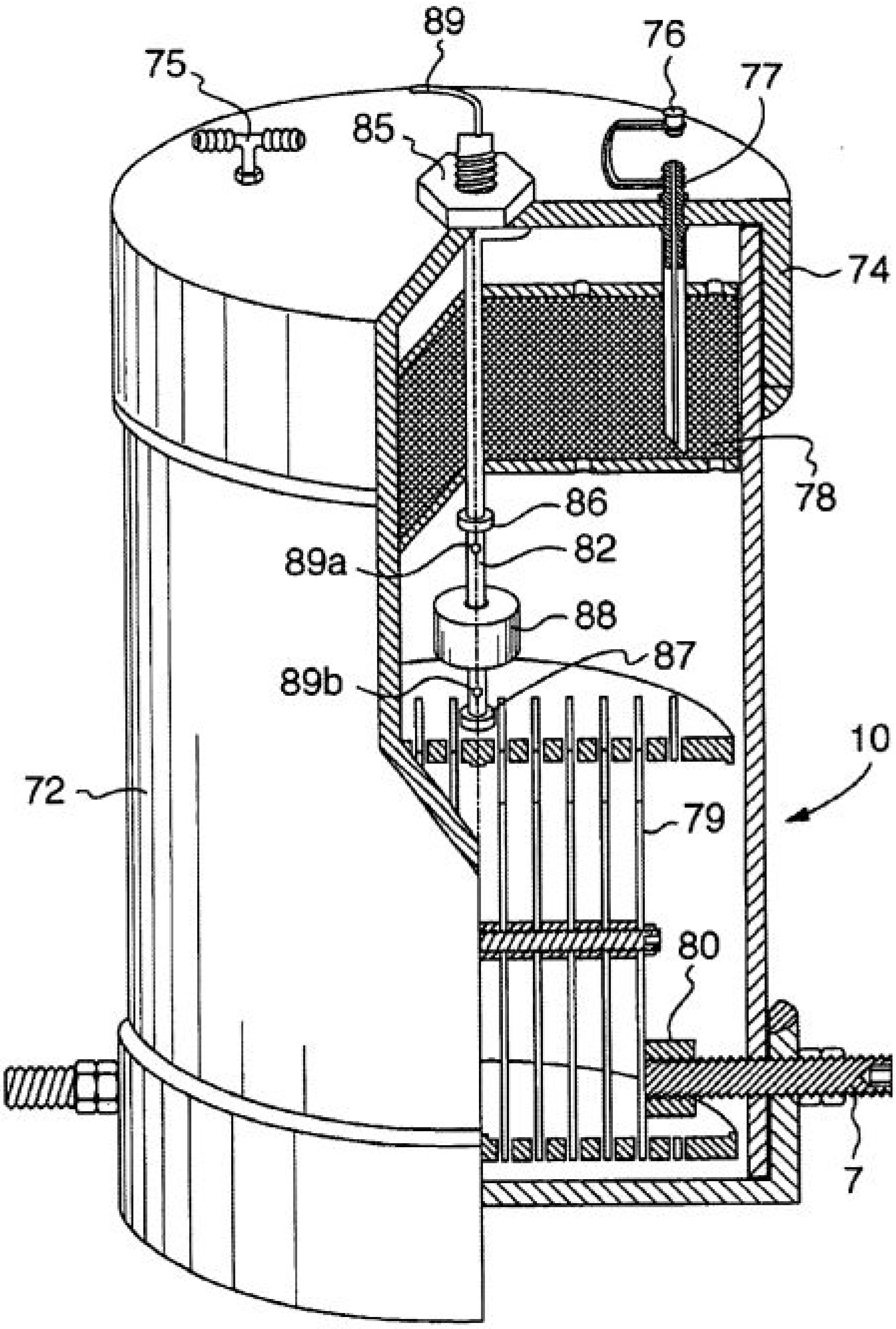

Inventor: Bill Ross. Patent № 6896789 "Electrolysis cell and internal combustion engine kit comprising the same" – 2005. Also Patent № 7143722 – 2006

A system for producing one or more gases for enhancing combustion in an internal combustion engine, the engine having an intake, the system comprising: an electrolysis cell, for generating one or more combustion enhancing gases under pressure; a gas conduit, for connecting the electrolysis cell to the internal combustion engine; and a flow regulator, operatively connected between the electrolysis cell and the intake of the engine, for regulating a flow of **the combustion enhancing gases** to the engine.

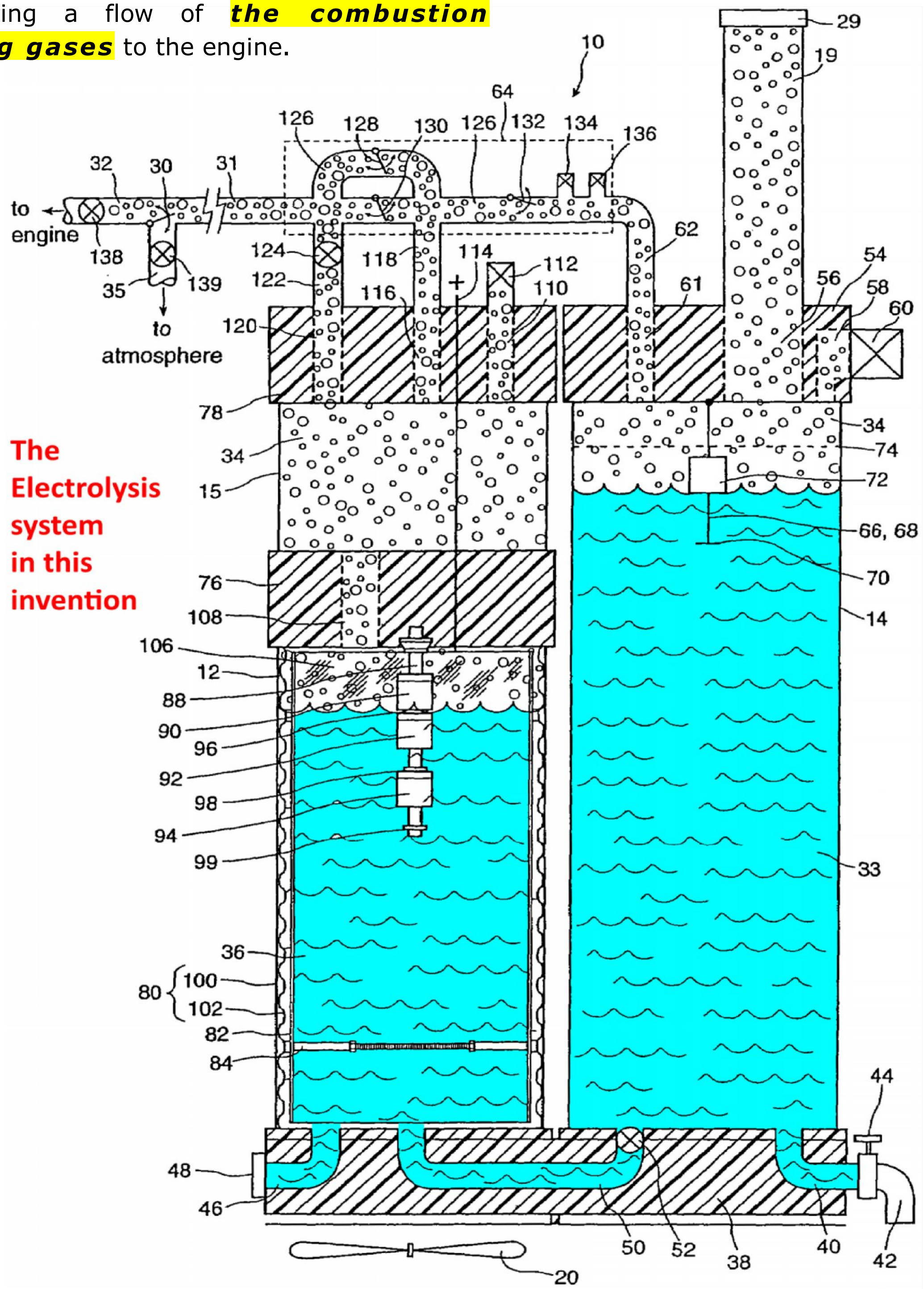

The Electrolysis system in this invention

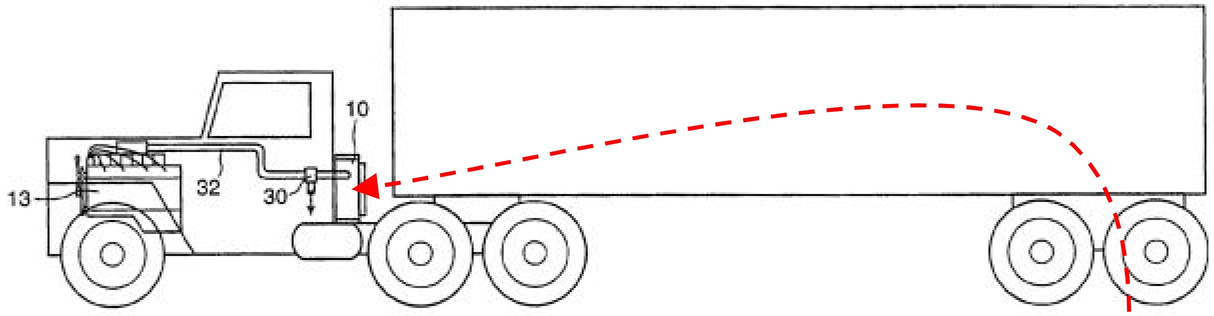

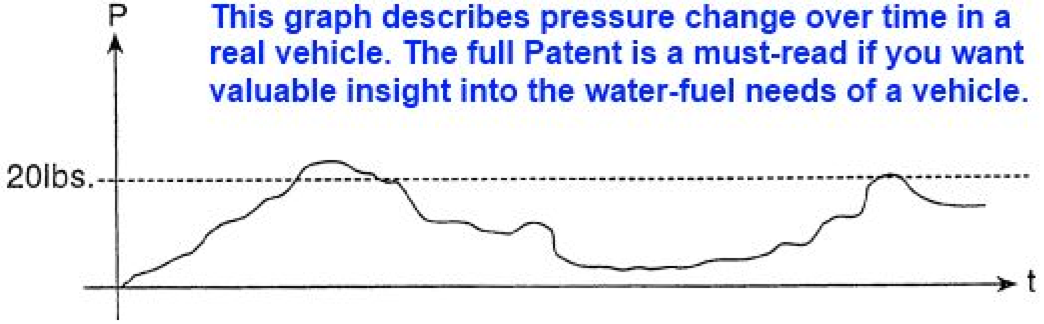

This graph describes pressure change over time in a real vehicle. The full Patent is a must-read if you want valuable insight into the water-fuel needs of a vehicle.

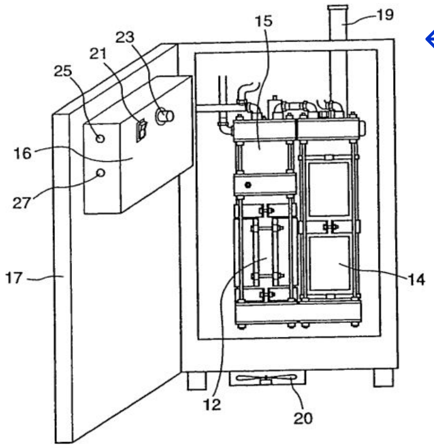

← The system is installed behind the cabin.

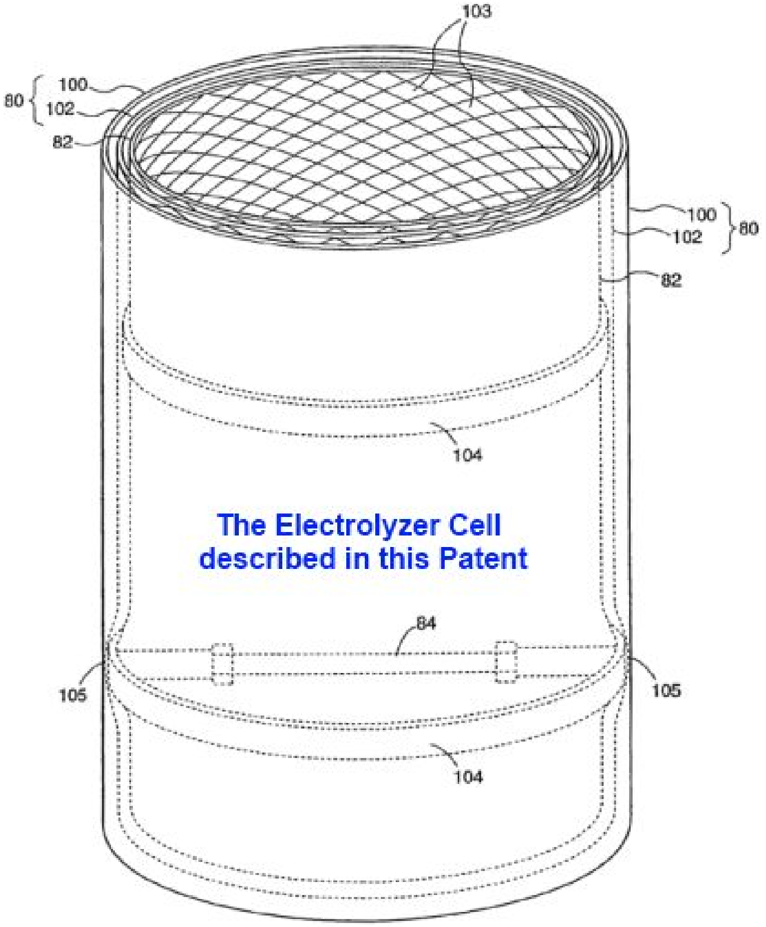

The Electrolyzer Cell described in this Patent

Inventor: Donald Owens. Patent № 6896789
"Hydrogen supplemental system for on-demand hydrogen generation for internal combustion engines" – 2013

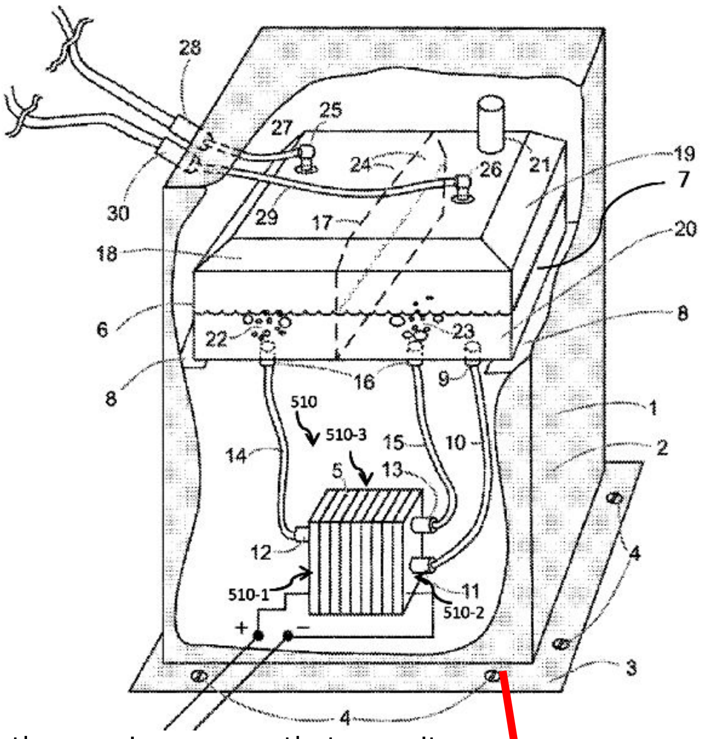

ABSTRACT: A portable, on-demand hydrogen generation system producing hydrogen and injecting the hydrogen into the air intake of internal combustion engines. Hydrogen and oxygen is produced with an electrolyzer from nonelectrolyte water in a supply tank. The hydrogen and oxygen is passed back thru the supply tank for distribution **and water preservation.**

The gases are kept separate by a divider in the tank. The device is ***optionally powered by the vehicle battery, a stand-alone battery, waste heat of the internal combustion engine or solar energy***. The system utilizes a vacuum switch or other engine sensor that permits power to the device and therefore hydrogen production ***only when the engine is in operation***.

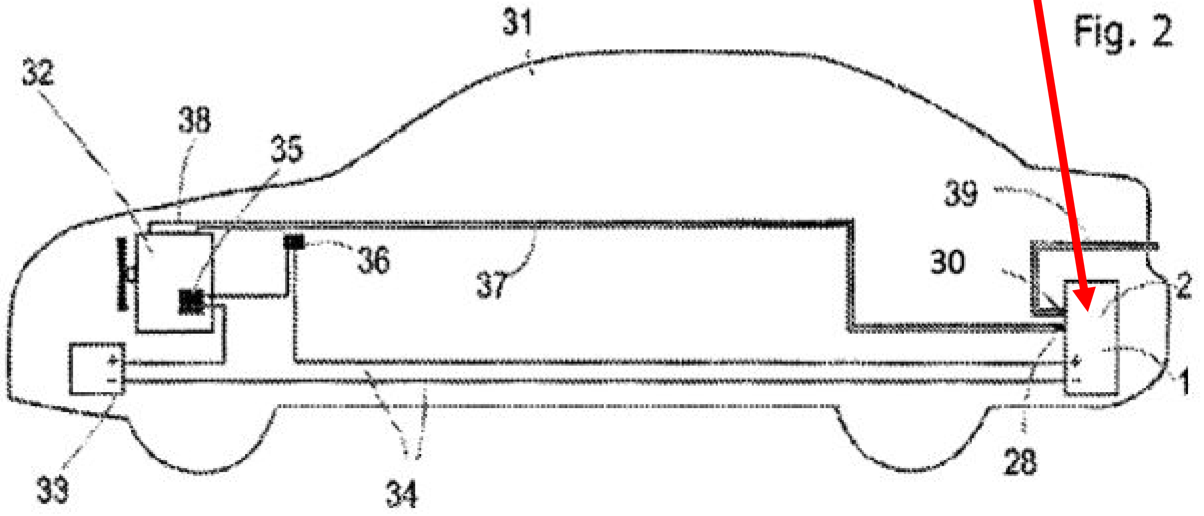

Fig. 2

> ***From SUMMARY OF THE INVENTION: "In the case of gasoline engines, the hydrogen gas is directed to the air intake of the engine while*** the oxygen gas is optionally vented to the atmosphere. ***--- No hydrogen is stored on, in or around the vehicle."***

Inventor: Nicolas Chauvin[154]. Patent App. № US20130263597 A1
"Low Energy Nuclear Thermoelectric System" – 2013

A ***low energy nuclear*** thermoelectric system ***for a vehicle*** which provides a cost-effective and sustainable means of transportation for long operation range with zero emission using an onboard low energy nuclear reaction thermal generator. The present invention generally includes a thermal generator within a thermal enclosure case, an energy conversion system linked with the thermal generator, an energy storage system linked with the energy conversion system, a cooling system and a central control system. The thermal generator reacts ***nickel powder with hydrogen*** within a reactor chamber to produce heat. The heat is then transferred to the energy conversion system to be converted into electricity for storage in the energy storage system. The cooling system provides cooling for the various components of the present invention and the control system regulates its overall operation. The present invention may be utilized to power a vehicle in an efficient, sustainable and cost-effective manner.

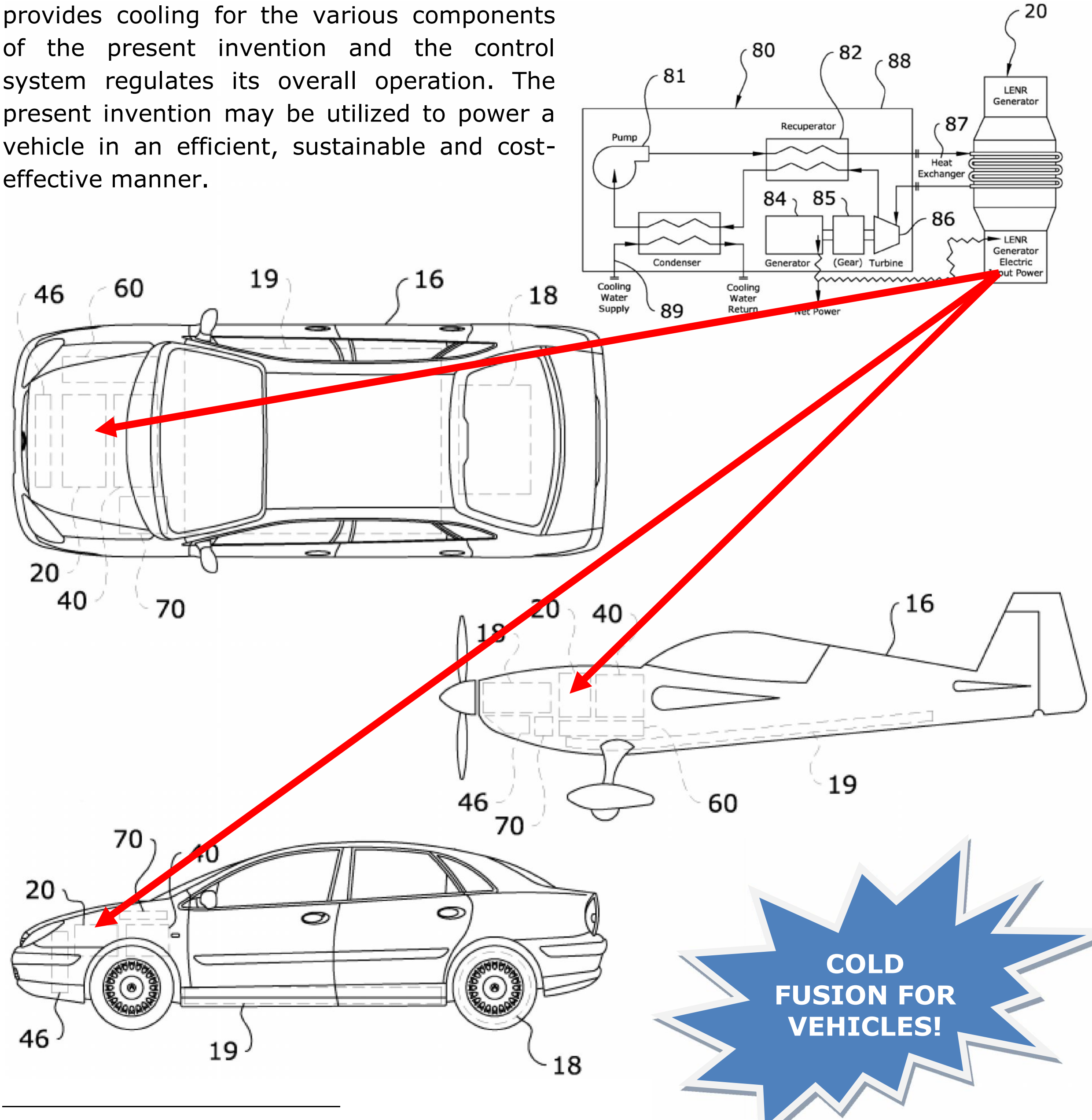

COLD FUSION FOR VEHICLES!

---

[154] CEO of www.lenr-cars.com

Inventors: John Thomas O'bireck, Singh Kanwaljit Basra, John E. Doughty. US Patent Application 20100043730 "Hydrogen Generating System for Operation with Engine Turbo Condition." Filed: January 2007. Published: February 2010

BACKGROUND: "A hydrogen generating system may be used on a vehicle to generate hydrogen gas for supplementing the vehicle's fuel supply **for fuel economy, to reduce emissions and/or to increase engine performance**."

STILL QUOTING from 'BACKGROUND': "*Hydrogen generating systems have been used on Diesel engines in cooperation with turbochargers. It has been discovered that injection of generated hydrogen gas during turbo boost can generate extra power but does not always correlate to fuel economy. In fact, power generation can be enhanced to such a degree by use of a hydrogen generating system that the vehicle driver tends to drive the engine to turbo boost conditions more frequently such that fuel consumption benefits are not realized to the extent expected during use of a hydrogen generating system. This unrealized fuel conservation or tendency for drivers to seek turbo boost conditions, may deter some fleet operators from using hydrogen generating systems in their fleets.*"

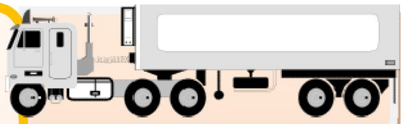

From my experience this description is true FOR SOME DRIVERS. If you're the owner of water-enhanced big rigs (lorries) then I guess you step lighter of the pedal to save your hard earned cash. But it's always nice to see down-to-earth discussions in official Patent docs. (~Ozzie)

From SUMMARY OF THE INVENTION: "According to one aspect of the present invention, there is provided a hydrogen generating system operable with an engine of a vehicle including a turbocharger, the hydrogen generating system comprising: ***an electrolysis assembly including at least one anode and at least one cathode configured to be capable of generating hydrogen gas by application of an electrical current therethrough in an electrolyte and a gas delivery system for delivery of generated hydrogen gas to the engine***; and a system for monitoring engine condition in respect of turbocharger condition, the system including a function for detecting an engine turbocharge status and a function for controlling the delivery of generated hydrogen gas to the engine of the vehicle in response to the detection of a selected engine turbocharge status."

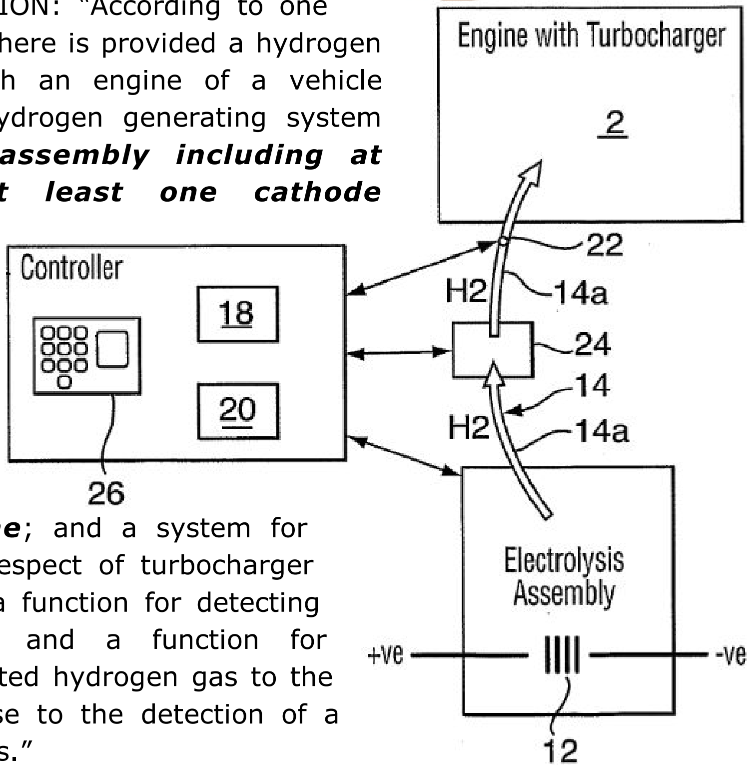

Inventor: Norman Williams. US Patent Application 2010/0288212
"On demand system for using water (HHO) as a sole fuel"
Filed: June 2009. Published: November 2010

The instant invention provides a system and apparatus for direct retrofit into any internal combustion engine a system and apparatus for an engine that uses only water as the raw fuel sources hydrogen, oxygen, and steam. The system is designed for on demand conversion of distilled water to hydrogen, oxygen and a slight amount of water vapor. Sensors, minor chamber modifications are the only minor changes to the original or OEM system provides an elegant answer to a question of alternative energy. With addition of multiple heat exchange units or steam generators, ***surplus energy is made***.

This illustration (based on FIG.2 of the Patent) shows the embodiment of this invention on a jet engine:

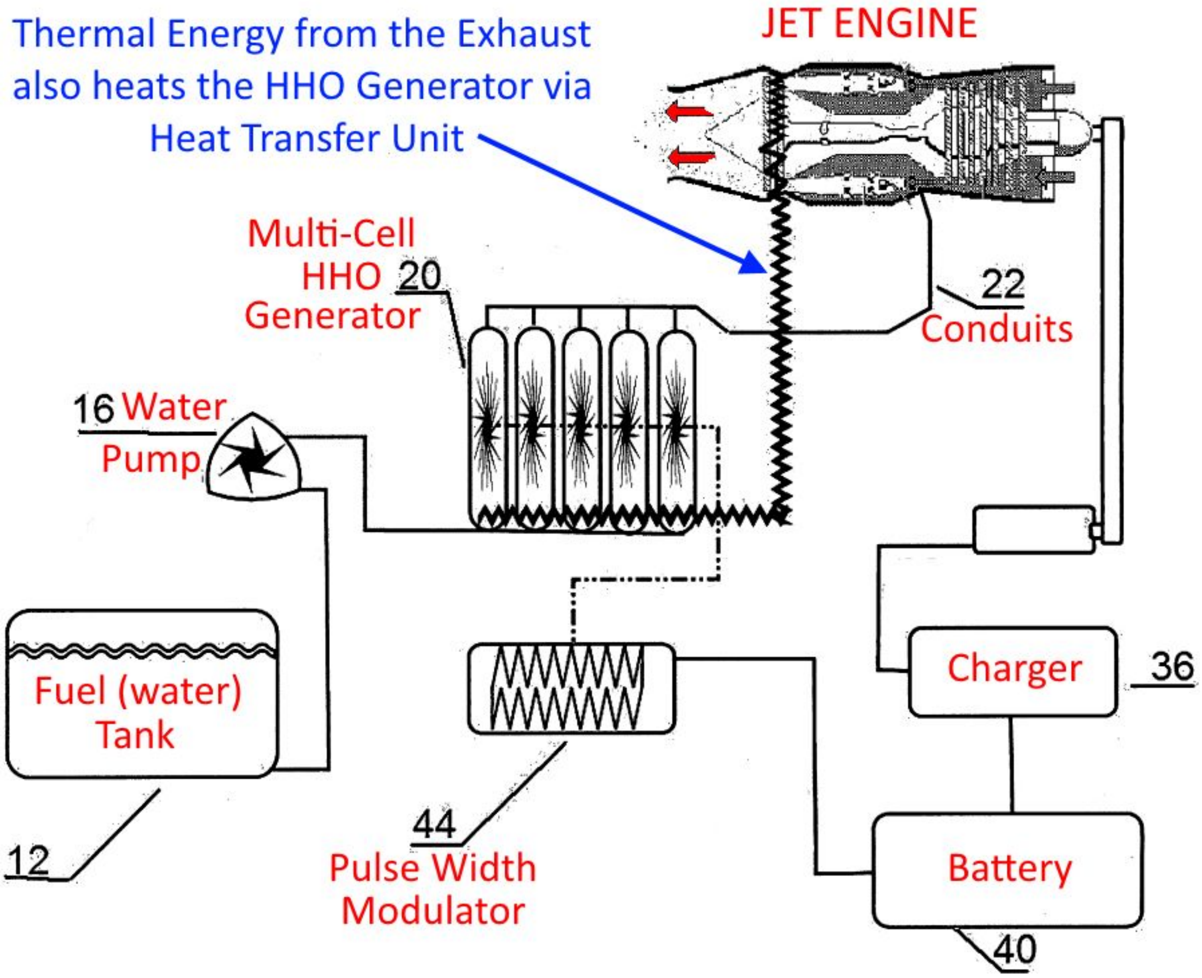

Japanese[155] Inventors: Yoshinori Kamitani, Hiroki Yamaguchi and Fumiyuki Hori. U.S. Patent № 6096177 "Electrolyzed water production apparatus" – 2000. Also Chinese Patent № CN1240766A in 2000 and CN1136152C in 2004

DESCRIPTION (greatly abridged): This invention relates to motorized vehicles, specifically automobiles powered by an energy source other than conventional fuels, such as gasoline, Diesel, alcohol, hydrogen, and the like. An apparatus and method for converting fluid molecules from a liquid state into a vapor state wherein the fluid has unnatural bond angles.

…frequency that modifies the bond angles of molecules in a vapor state. Ignition of these molecules with unnatural bond angles reverts the molecules back to normal bond angles with a release of energy that can be utilized in many different applications without the release of toxic or noxious gases, greenhouse gases or any interaction with the atmosphere or the consumption of any atmospheric oxygen. For example, the molecules with unnatural bond angles may be used in engines to power a motorized vehicle.

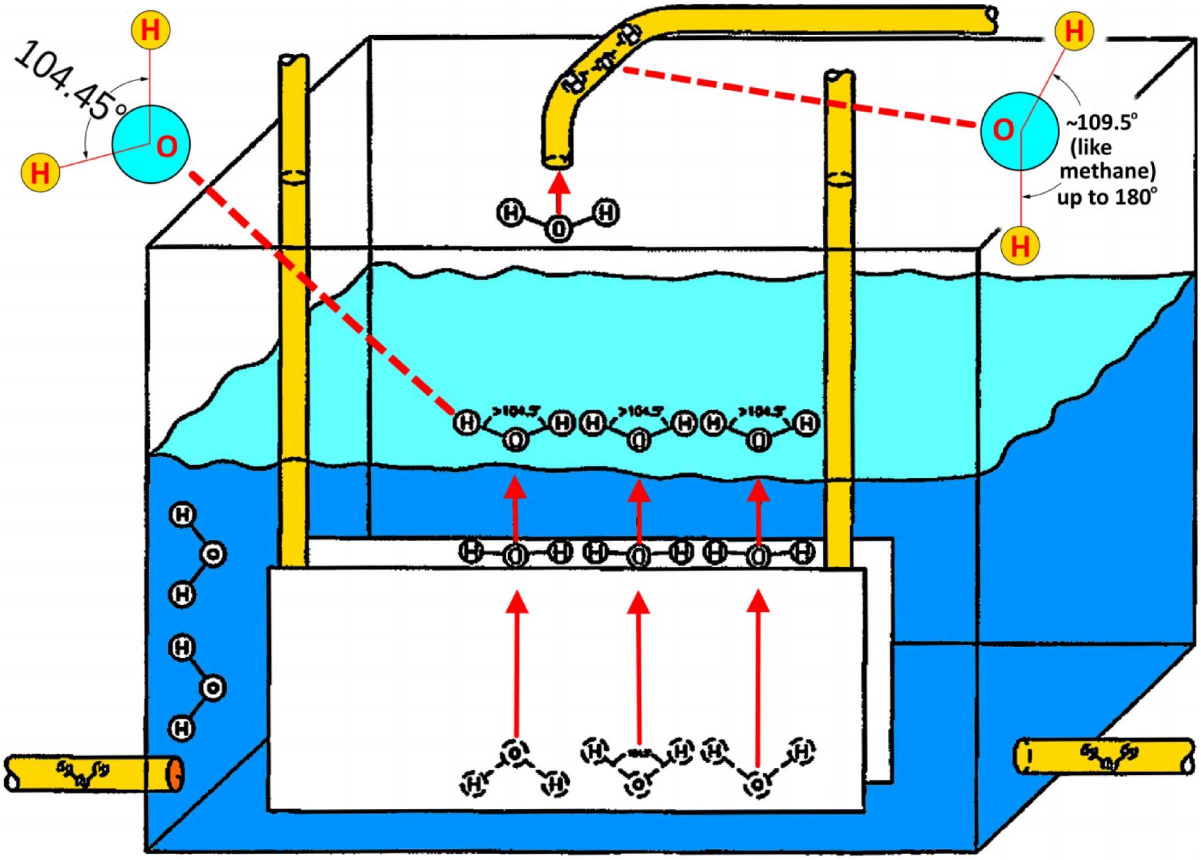

---

[155] The Original Assignee was Hoshizaki Denki Kabushiki Kaisha, a Japanese manufacturer based in Toyoake, Japan, that makes ice makers and other kitchen appliances

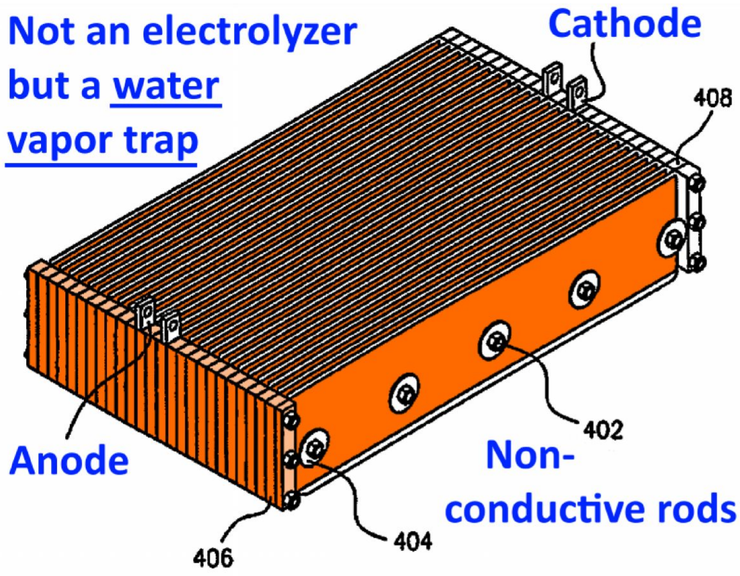

The location of the water vapor trap in the vehicle is not shown in the diagrams or specified in the text of this Patent; I would place it near the storage tank. There are many more important parts and options not shown here (even the water vapor trap is only one optional embodiment) - refer to the complete Patent for details and options. (~Ozzie)

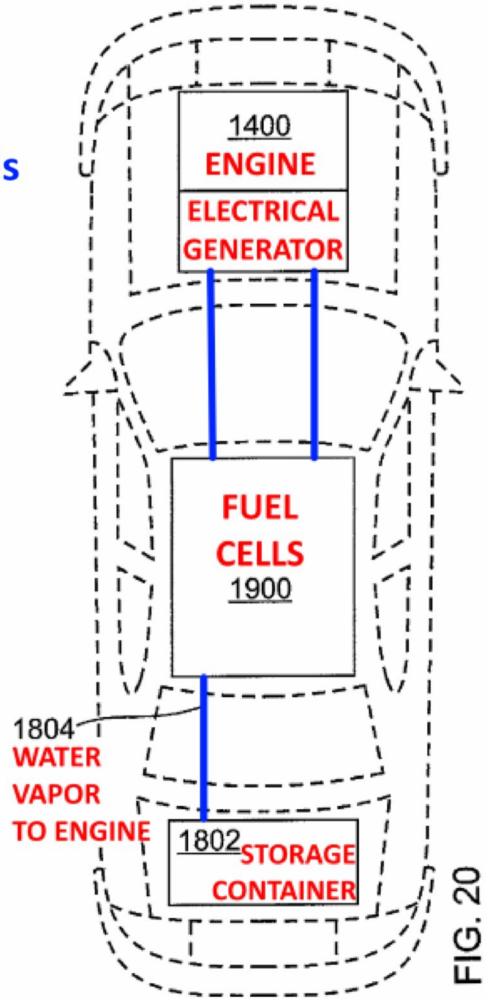

FIG. 20

This process and resulting product have advantages over the traditional electrolysis process in that less energy is consumed in making the product and the product produced, that is water molecules with unnatural bond angles, is safer to use than the highly explosive hydrogen gas produced by electrolysis. In addition, unlike electrolysis, which requires the use of water and added electrolytes, the current method and apparatus does not require the addition of any electrolytes to the water or solution. In other words, pure water may be used.

Inventor: Reinhard Gentsch and "Auf Teilnichtnennung Antrag" *("others remain unnamed by request").* ***German Patent Application № DE201210006827-A1 "Method for operating combustion engine of motor car, involves producing required amount of hydrogen by electrolysis process for operation of combustion engine, and transferring hydrogen and oxygen into combustion chamber" - 2013***

The method involves producing required amount of hydrogen by an electrolysis process for operation of a combustion engine, where voltage required for the electrolysis process is provided by a voltage converter or a 24 volt alternator (G). The hydrogen and oxygen are transferred into a combustion chamber. The engine is operated by a combination of fossil fuel and a hydrogen-oxygen mixture. A pressure switch (S) is integrated into a gas pressure spacer (2). A black-white-valve (V) is closed by the pressure switch if low pressure in an air intake channel (A) falls below -0.5 bar. An independent claim is also included for a mixing generator for production of a fuel mixture for operating a combustion engine.

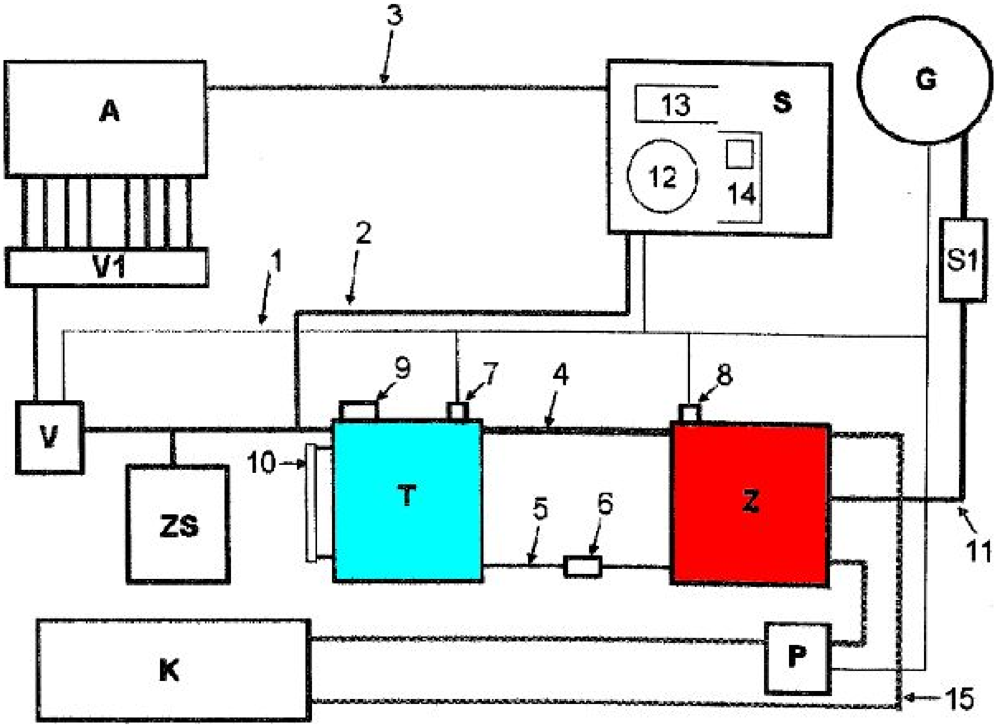

A: Intake tract
S: Control unit
Si: Fuse
G: Generator
V: Valve
V1: Distribution
Z: Electrolysis cell
T: Water Tank
ZS: Cache
K: Cooling
P: Pump
1: Electric lines
2: Gas pressure line
3: Vacuum line
4: Gas outlet
5: Water inlet line
6: Water Filters
7: Water level sensor
8: Temperature sensor
9: Wassereinfühlstutzen
10: Water level sight glass
11: Power line to SOA
12: Pressure gauge
13: Temperature display
14: Vacuum gauge
15: Coolant lines

Inventor: Donald W. Owens. Patent № 9574492 "Portable Hydrogen Supplemental System and Method for Lowering Particulate Matter and Other Emissions in Diesel Engines at Idle" – 2017

Note that both this Patent and the website www.hnogreenfuels.com of the responsible company – HNO Green Fuels, Inc. – stress the use of Brown's Gas for EFFECTIVELY reducing emissions in Diesels. However, in the "About Us" page they do mention that it is good for fuel economy, too. They address heavy transportation such as marine Diesels and long-haul Diesel trucks, as well as aircraft jet engines. Keep up the good works, guys!

> ***ABSTRACT: A portable on-demand hydrogen supplemental system is provided for producing hydrogen gas and injecting the hydrogen gas into the air intake of internal combustion engines for the purpose of increasing the combustion efficiency in the combustion chamber and lowering particulate emissions at idle. Hydrogen increases the laminar flame speed of diesel fuels, thus increasing combustion efficiency. Hydrogen and oxygen is produced by an electrolyzer from nonelectrolyte water in a nonelectrolyte water tank. The hydrogen gas is passed through a hydrogen gas collector. Nonelectrolyte water mixed with the hydrogen gas in the hydrogen gas collector is passed back thru the tank for distribution and water preservation. The system utilizes an onboard diagnostic (OBD) interface in communication with the vehicle's OBD terminal, to regulate power to the system so that hydrogen production for the engine is adjusted based on the RPM level and operation conditions of the vehicle.***

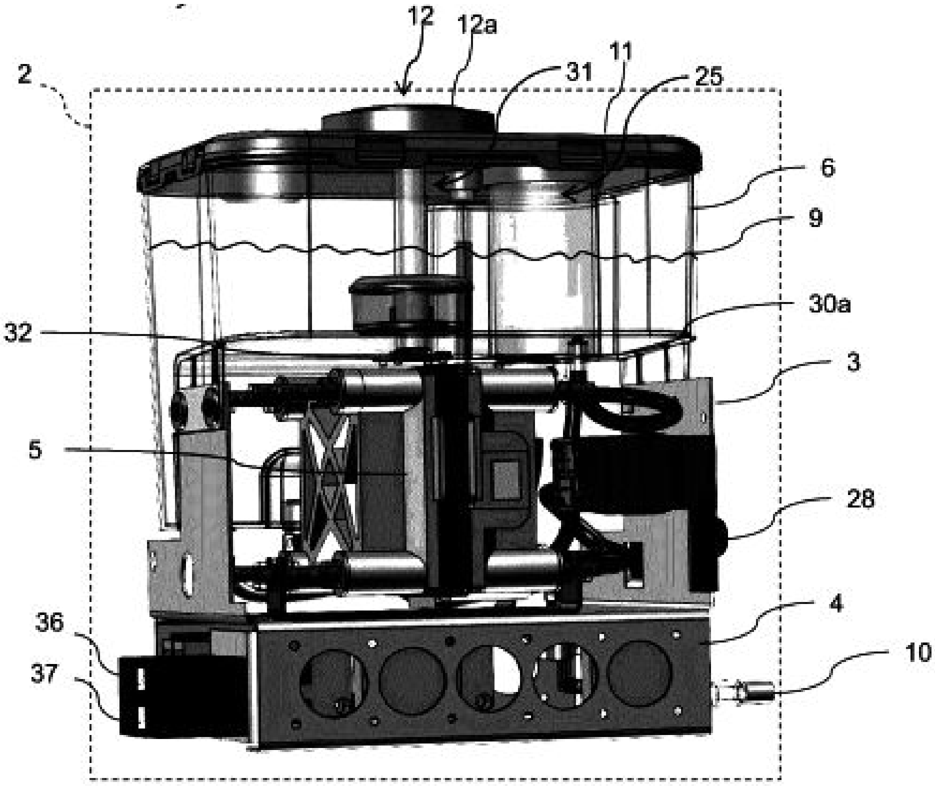

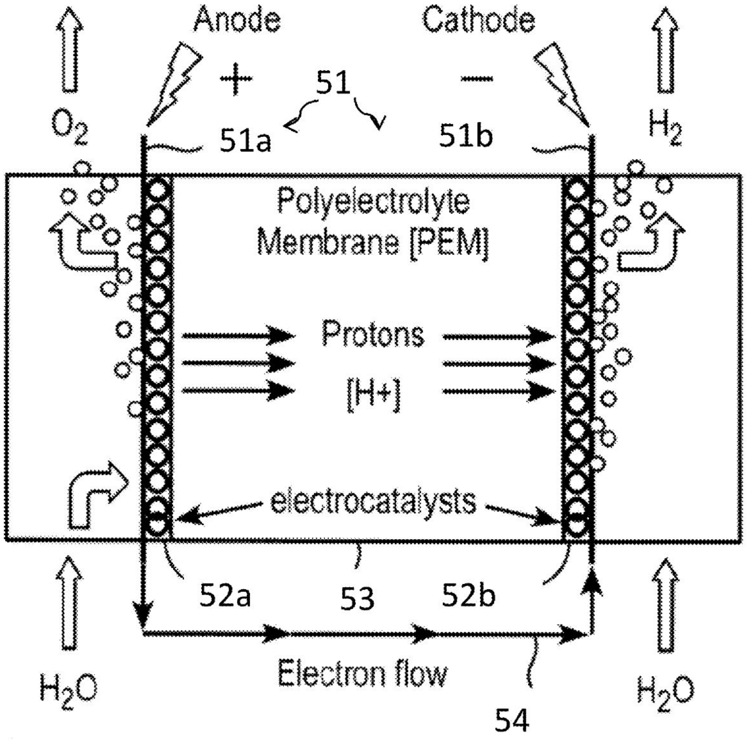

Fig 5. THE ELECTROLYTIC CELL

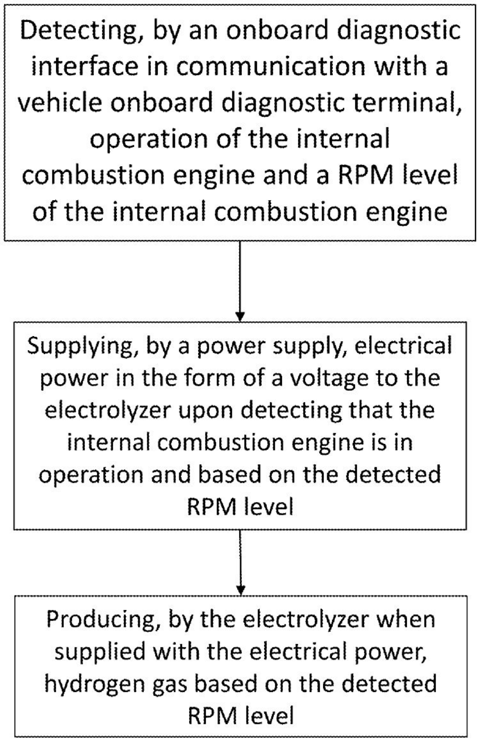

Detecting, by an onboard diagnostic interface in communication with a vehicle onboard diagnostic terminal, operation of the internal combustion engine and a RPM level of the internal combustion engine

Supplying, by a power supply, electrical power in the form of a voltage to the electrolyzer upon detecting that the internal combustion engine is in operation and based on the detected RPM level

Producing, by the electrolyzer when supplied with the electrical power, hydrogen gas based on the detected RPM level

Fig 10. AUTOMATED CONTROL

The present invention relates to a portable and compact, on-demand hydrogen supplemental system and a method for producing hydrogen gas and monitoring and controlling the amount of hydrogen being produced and injected into the air intake of internal combustion engines, particularly for diesel engines for the purpose of causing a more complete combustion of the fuel in the combustion chamber. The system and method reduces fuel consumption and emissions of diesel or other internal combustion engines at idle and at operating conditions. Hydrogen and oxygen is produced by an electrolyzer at low temperatures and pressure from nonelectrolyte water in a nonelectrolyte water tank.

The hydrogen gas is passed through a hydrogen gas collector. Nonelectrolyte water mixed with the hydrogen gas in the hydrogen gas collector is passed back thru the nonelectrolyte water tank for distribution and water preservation. The hydrogen gas and the oxygen gas travel in separate directions, therefore the gases are kept separate. In the case of most internal combustion engines, only the hydrogen gas is directed to the air intake of the engine while the oxygen gas is vented to the atmosphere.

Hydrogen has a high specific energy, high flame propagation speed and wide range of flammability and as such offers rich potential to promote combustion efficiency and reduce pollutant emissions in diesel fuel and other types of hydrocarbon-based fuels.

Hydrogen is mixed with the air that is used for combustion. The fundamental combustion parameter that compactly characterizes and quantifies the effects of hydrogen addition is the laminar flame speed, which embodies information about the exothermicity, reactivity and diffusivity of the resulting mixture.

To-date, experiments have been conducted for the hydrocarbon fuels methylcyclohexane, toluene, decalin, propane and kerosene. For each fuel, flame speed data were measured under various conditions. Results show a surprising increase in laminar flame speed with added hydrogen. In some cases the results were almost linear. The exact nature of the hydrogen-enhanced burning is seen to depend on the fuel volatility. Under some conditions, hydrogen addition was observed to increase the hydrocarbon burning rate by more than a factor of two. The flame speed increase for many fuels extends to normal and elevated pressures.

With this increase in flame speed, combustion efficiency and particulate matter emissions can also be reduced.

The system can be powered by the vehicles alternator, a stand-alone battery, waste heat or solar energy. The system utilizes an engine sensor or an onboard diagnostic (OBD) interface in communication with the vehicle's OBD terminal or other electronic controller, to regulate power to the system and monitor the RPM levels of the engine and the on-demand hydrogen supplemental system to supply hydrogen gas at the engine at specific RPM levels as determined by the vehicle's OBD terminal. Therefore, hydrogen production for the engine is controlled when at idle and at other operating conditions. As the hydrogen gas is produced it is immediately consumed by the engine. No hydrogen is stored on, in or around the vehicle.

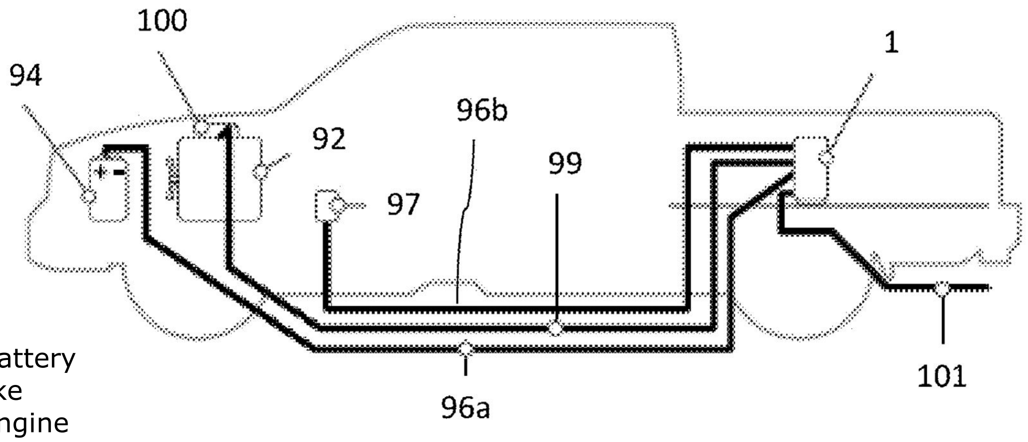

94: Vehicle Battery
100: Air Intake
92: Vehicle Engine
97: OBD Interface
96a: Electrical Wire to Battery
96b: Communication with the main power board
99: Hydrogen Hose
1: Portable Hydrogen Supplemental System
101: Oxygen Outlet

Inventor: Lien Chiow Tan (Singapore). Patent № 9605222 "Reactor" – 2017. Also registered internationally as WO2010151157-A1 "High Temperature Electrolysis System" – 2010

This invention provides a reactor for: converting feedstock material into gases; or disassociating or reforming a chemical compound; and a mixture to its constituent elements; and to other chemical forms, and finally a heating device. The reactor comprises a heating device for discharging an ionized gas into the reactor, a feedstock feeder for injecting the feedstock material into the reactor, and a shell forming a chamber that encloses a portion of the heating device and a portion of the feedstock feeder. The application also provides a method for converting hydrocarbon material into synthetic gases. The method comprises: providing the hydrocarbon material to a burner inserted into a reactor, a second step of supplying ionized gases into the reactor, and a third step of subjecting the burner to a flame of the ionized gases such that molecules of the hydrocarbon material are dissociated to forming synthetic gas.

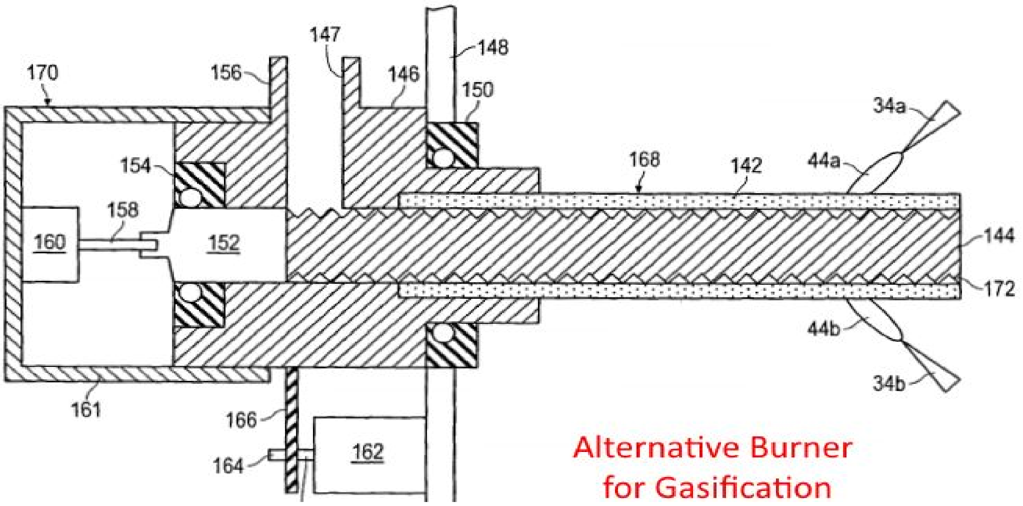

Alternative Burner for Gasification

The present application can provide a gasification device that comprises the reactor and an HHO gas generator. The HHO gas generator is connected to the heating device for supplying the ionized gases. The ionized gases comprise oxygen gas, hydrogen gas and free ions of oxygen and hydrogen molecules (O_2, H_2, O_{-2}, H_+, HO_-). In contrast to pure oxygen and hydrogen gases (no electrical charge), the ionized gases can be burnt at a much higher temperature of more than 2,200°C., which is sufficient for disassociating the hydrocarbon material into the synthetic gas.

In one preferred embodiment, the ionized oxygen and hydrogen gases (i.e. HHO gas or oxyhydrogen gas) is generated by an electrolysis process in water solution of potassium hydroxide. The potassium hydroxide solution may be replaced by water. Electrodes for conducting the electrolysis process may be charged with continuous supply of constant voltage (e.g. DC) or pulsating direct current.

Outputs (e.g. voltage and current) of the DC power supply may be connected to the regulator for regulating production rate of the ionized HHO gas (i.e. oxyhydrogen gas).

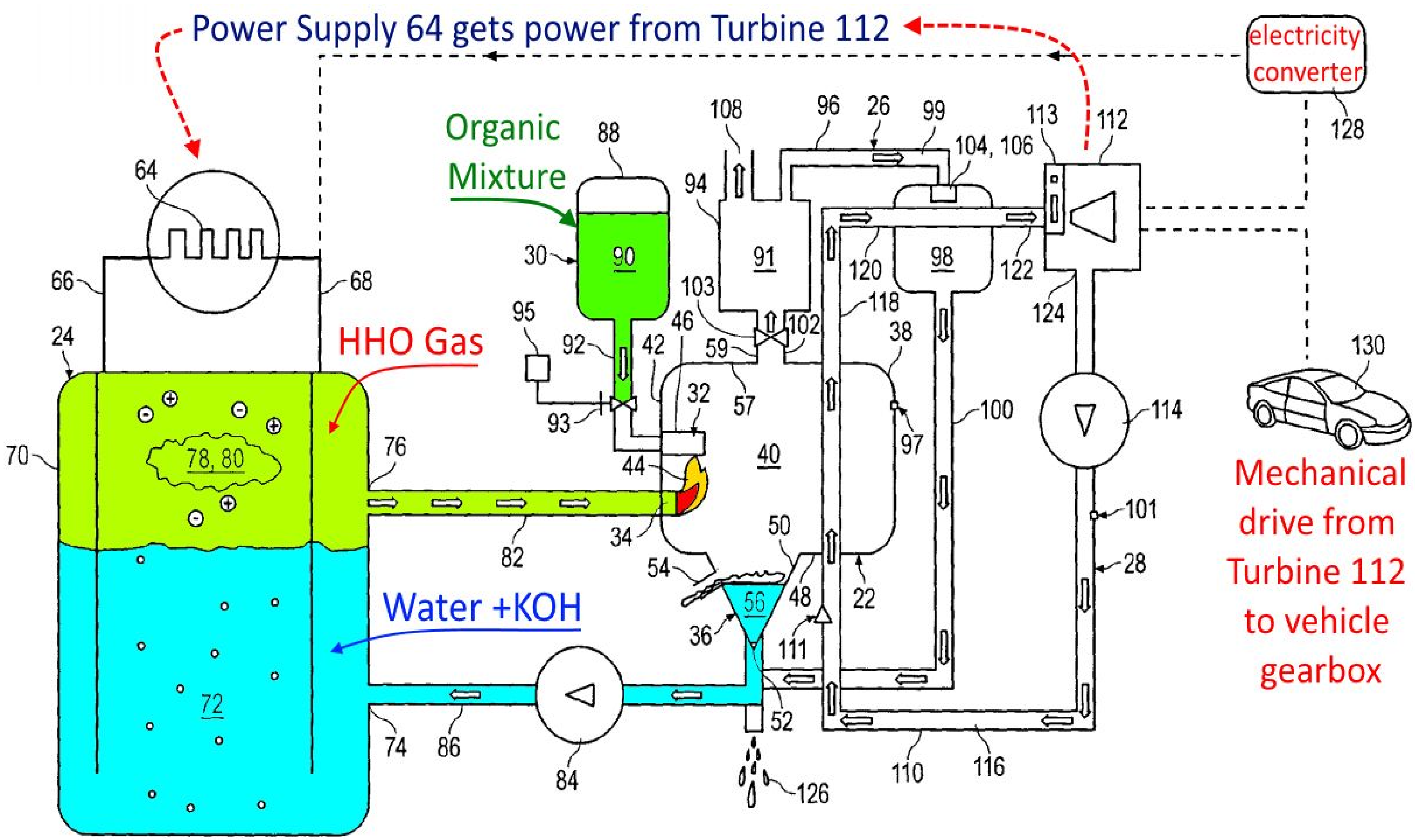
Power Supply 64 gets power from Turbine 112
electricity converter
128
Organic Mixture
HHO Gas
Water +KOH
Mechanical drive from Turbine 112 to vehicle gearbox
130
64
66
68
24
70
78, 80
72
76
82
74
86
84
88
90
30
92
93
95
42
46
32
44
34
40
54
36
56
50
48
111
52
126
57
59
103
94
91
108
96
26
99
104, 106
98
120
118
38
97
22
100
102
113
112
122
124
114
101
28
110
116

Water Injection Patents

Inventors: James P. Szybist & James C. Conklin.
Patent № 8291872 "Highly efficient 6-stroke engine cycle with water injection" – 2012

A six-stroke engine cycle having improved efficiency. Heat is recovered from the engine combustion gases by using a 6-stroke engine cycle in which combustion gases are partially vented proximate the bottom-dead-center position of the fourth stroke cycle, and water is injected proximate the top-dead-center position of the fourth stroke cycle.

[Later in the description] ---water is injected in an attempt to ***recover energy from the hot combustion gases***. ---water injection directly into the combustion chamber which offer ***improved operating efficiency of the engines***.

GOVERNMENT RIGHTS: This invention *was made with government support* under Contract No. DE-AC05-00OR22725 awarded by the U.S. Department of Energy. The government has certain rights in the invention. *{How come??? We paid for it! ~Ozzie}*

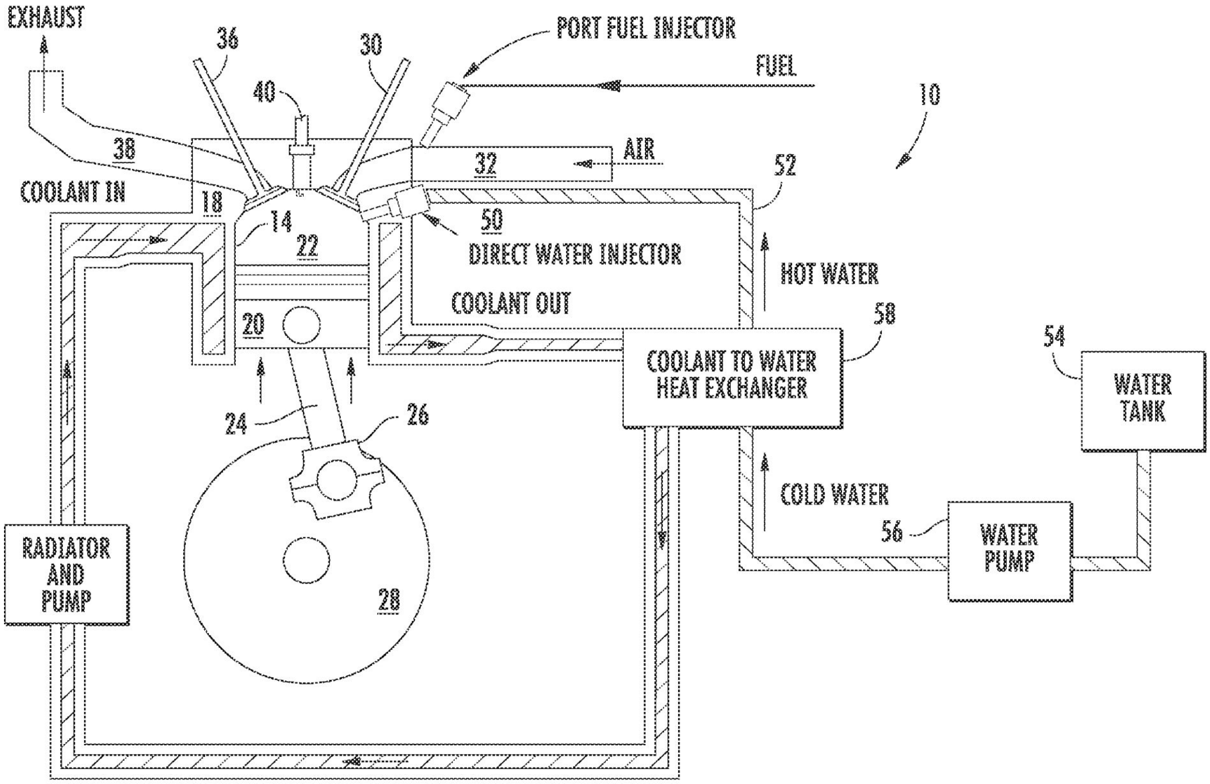

Inventors: Mathews, Crower, Kiss. Patent № 8661816 "Hybrid combustion energy conversion engines" - 2014

A hybrid internal combustion engine having a cylinder, a piston disposed within the cylinder, the piston constructed and arranged to reciprocate within the cylinder, and a combustion chamber defined by the cylinder and the top of the piston. The hybrid internal combustion engine also includes an exhaust manifold and a **heat exchanger disposed within the exhaust manifold.** A pump disposed between the heat exchanger and a fluid reservoir is provided to deliver fluid **{water}** from the reservoir to the heat exchanger, whereby the fluid in the heat exchanger is heated and turned into High Pressure Gas (HPG) when the combustion gases are exhausted from the combustion chamber via the exhaust manifold. The resulting HPG may then be introduced into the combustion chamber to provide a **HPG power stroke.**

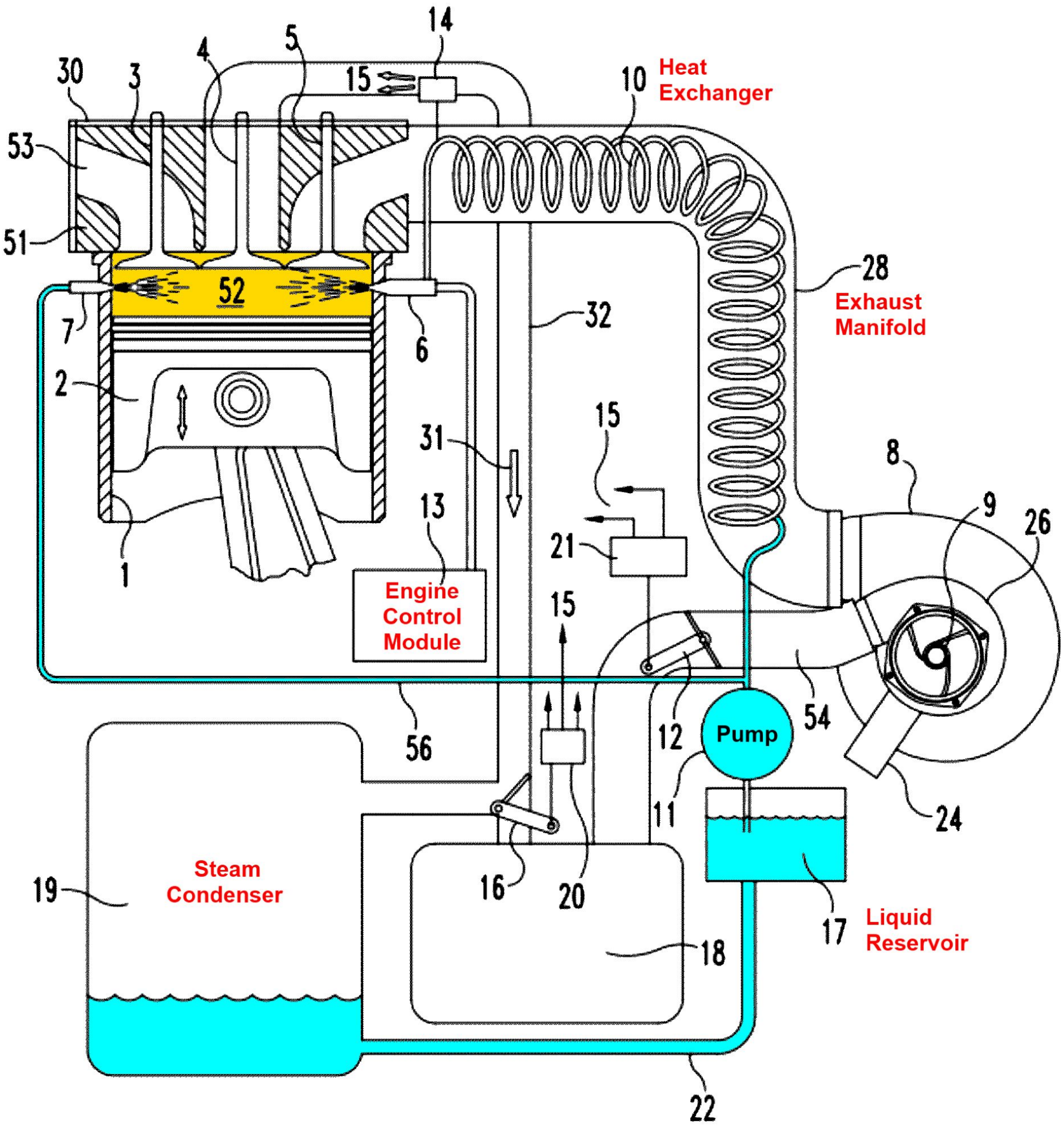

Water-Fueled Heaters

Inventor: Philipp Huber. Patent № 558176 "Process for Electrizing Water for Heating Purposes" – 1896

Using electrolysis, the inventor generates hydrogen in one jar and oxygen in the other. The gases are then combined in the burner tip.

The burner flame heats radiator "D" which is made of stone since a metal radiator would melt from the intense heat. The radiator dissipates the heat in the room.

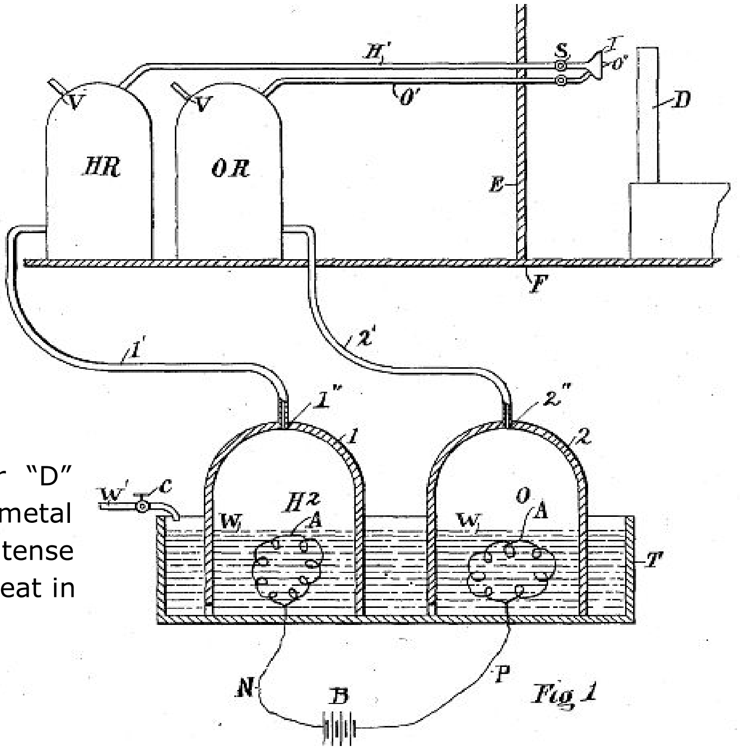

Fig 1

Inventor: John Munday. Patent № 5279260 "Water fuelled boiler" – 1994

A water to fuel electrolysis system for providing hydrogen and oxygen gases to a steam boiler for the production of heat and steam.

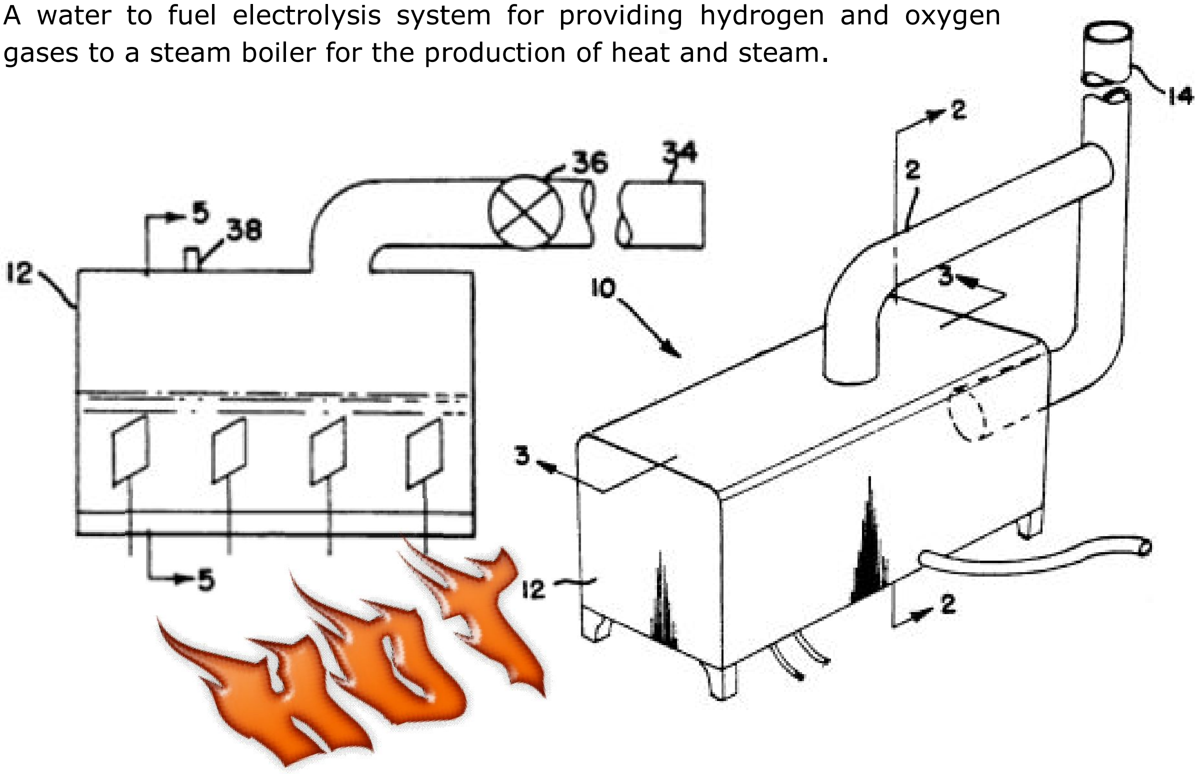

Inventor: Fred A. Wentworth Jr. Patent № 3862819
"Fuel catalyzer" – 1975

The energy output of a fossil fuel combustion system is increased by adding minute amounts of highly vaporized water and oil to the combustion air. In an oil gun such as used in **home heating plants** air pressure and vacuum is tapped off the gun compressor to bubble air through a sealed tank of water covered with an oil film and draw it back to mix with the combustion air flow.

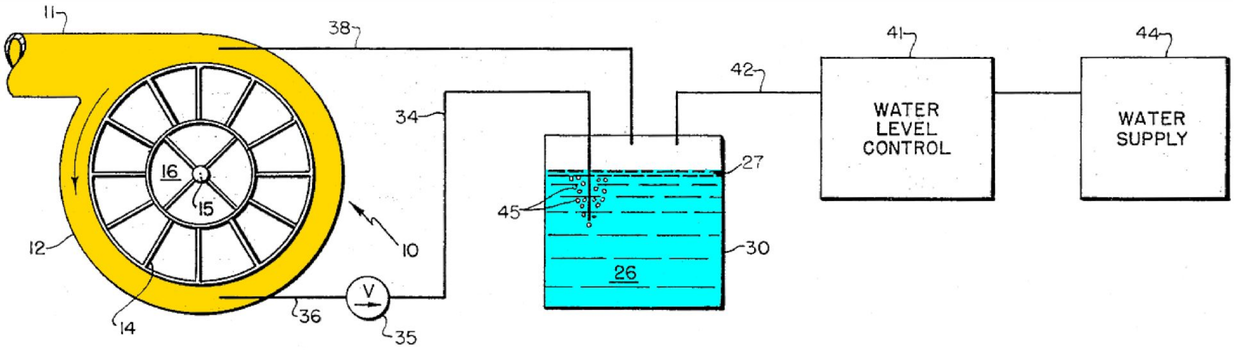

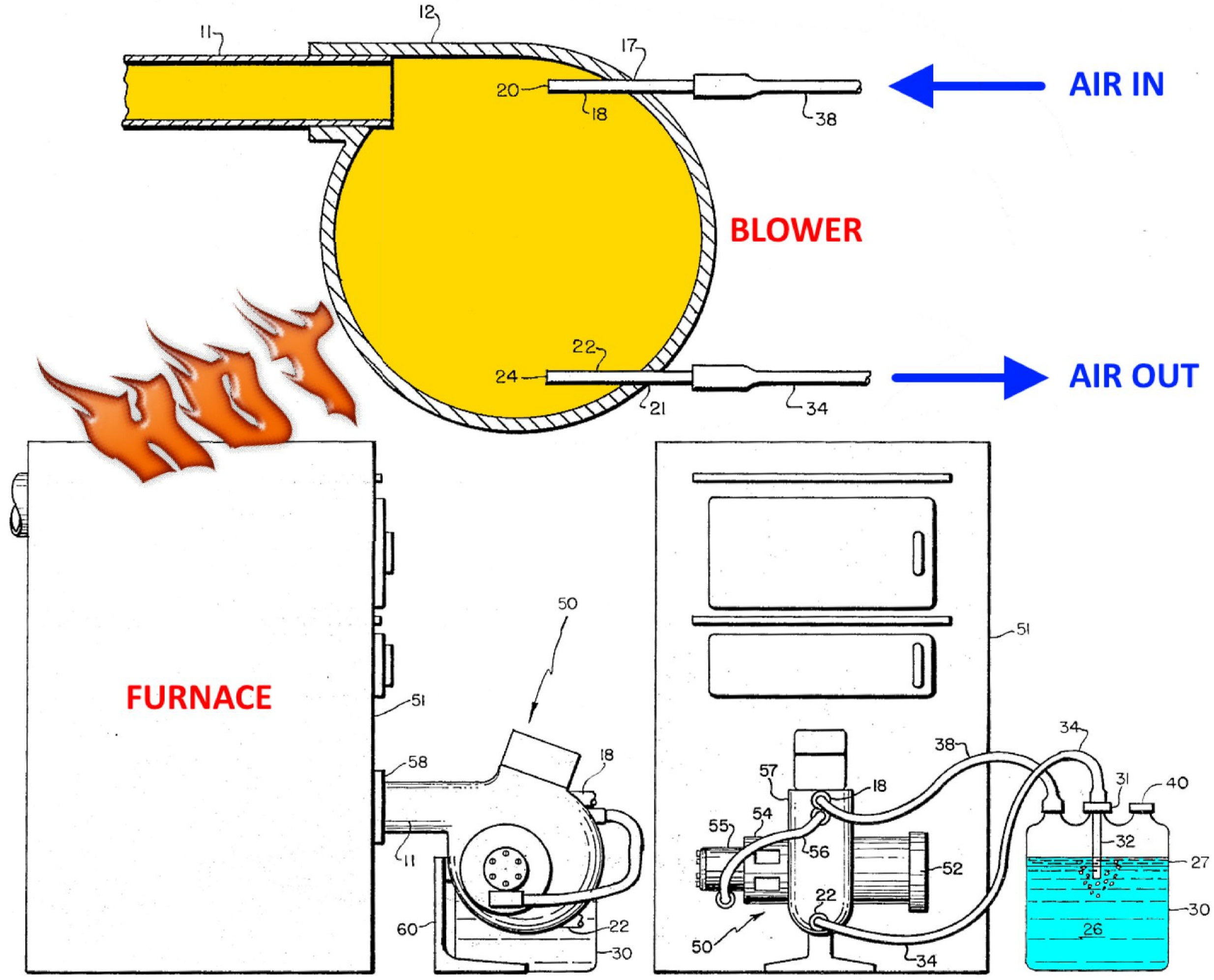

Inventor: Sang Nam Kim (S. Korea). Patent № 6443725 "Apparatus for generating energy using cyclic combustion of Brown Gas" – 2002

An energy generating apparatus using the cyclic combustion of Brown gas is disclosed. The apparatus comprises a heat generating unit, an outer wall, a Brown gas generator, an open-shut valve and a burner. The heat generating unit is positioned on a base. The outer wall surrounds the heat generating unit so as to define a combustion chamber, is provided with a discharge hole at its upper portion, and radiates infrared rays. The Brown gas generator is used to generate Brown gas. The open-shut valve is positioned between supply pipes so as to block the Brown gas discharged from the Brown gas generator. The burner is used to heat the heat generating unit by burning Brown gas supplied through the open-shut valve and the supply pipes.

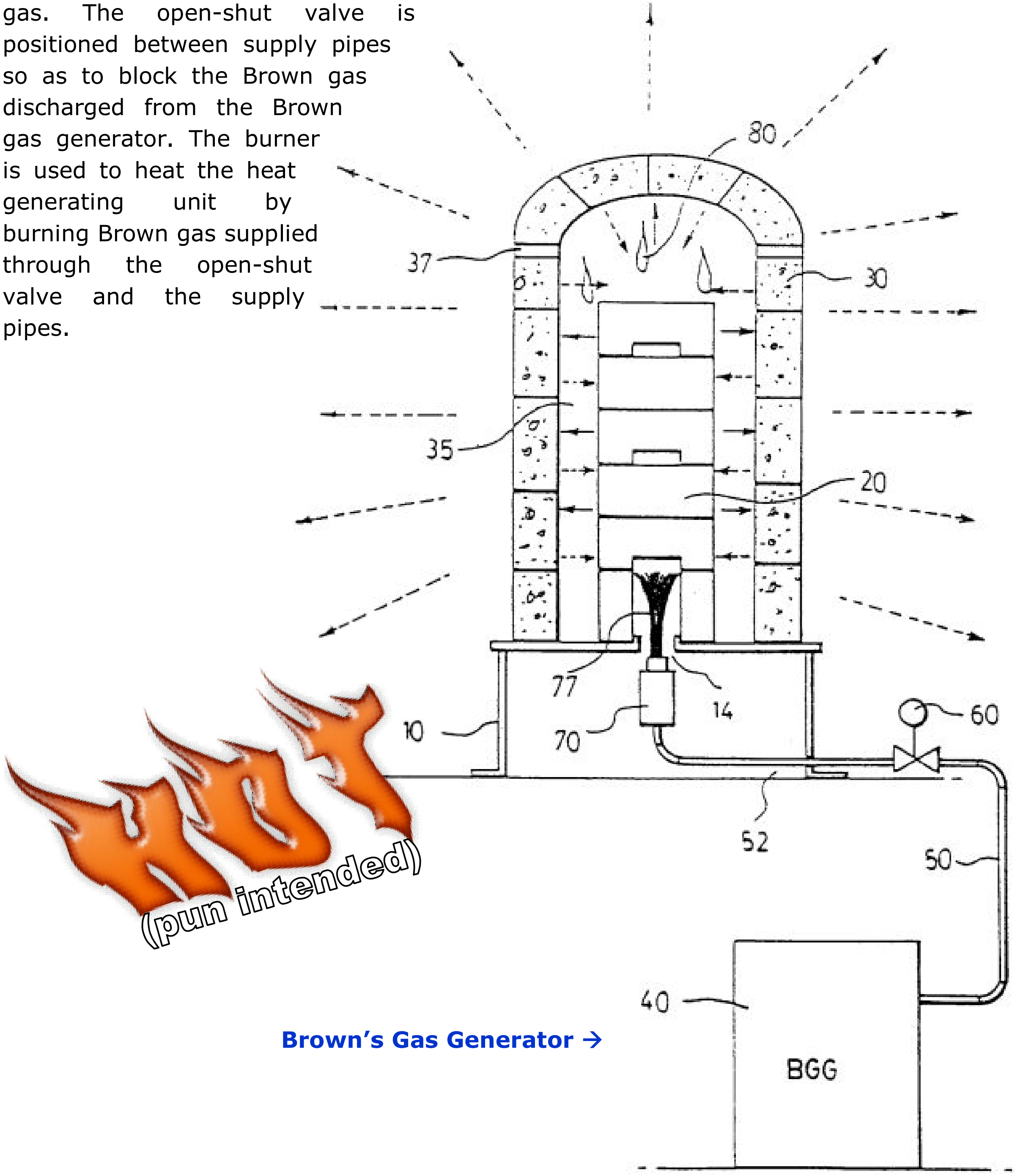

Brown's Gas Generator →

Inventor: Sang Nam Kim (S. Korea). Patent № 6397834
"Brown Gas heating furnace made of mineral stone" – 2002

The Brown gas heating furnace made of mineral stone maintains a desired temperature with a small amount of fuel. The brown gas heating furnace includes a hollow base, having burner mounting holes formed in a top wall of the base, and a door mounted at a front side of the base. The burners are centrally mounted in the burner mounting holes of the base, with branch ducts connecting each of the burners to a Brown gas supply duct. A heating section consisting of firebricks stacked together in a staggered fashion on the top wall of the base encloses the burner mounting holes, with a furnace section seated on the base and having a combustion chamber surrounding the heating section. The furnace section also has venting holes adapted to vent the combustion chamber to the atmosphere. The furnace section may include stacked blocks made of mineral stone, biotite, germanium, or jade, or may use hollow mineral stones.

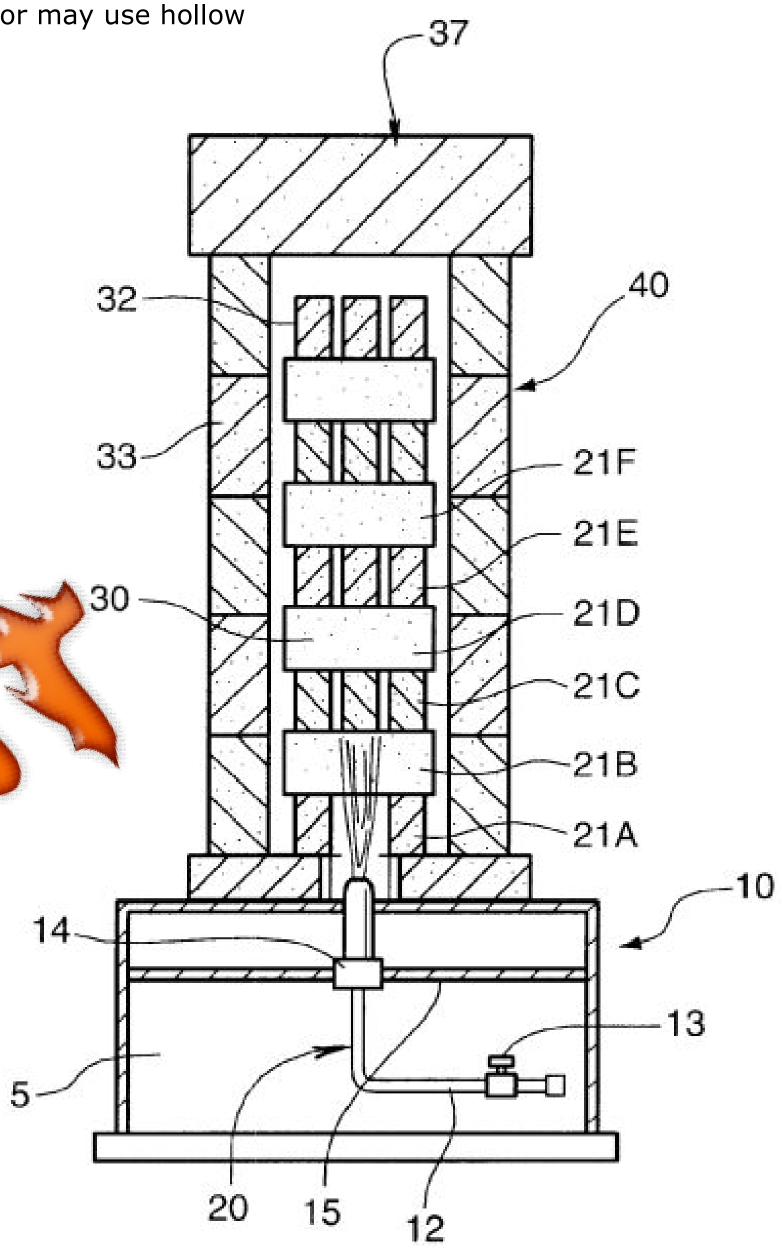

Inventor: Sang Nam Kim (S. Korea). Patent № 6761558
"Heating apparatus using thermal reaction of Brown Gas" – 2002

The present invention relates to a heating apparatus using thermal reaction of brown gas. After brown gas generated from a brown gas generator passes hexane liquid in a flame arrester, it is burnt in a brown gas burner located at a lower portion of a heating element. Heating members are installed in multi-stage inside a heating element body of a hollow form. The heating element body located at each stage includes vent holes and exhaust openings. A cover is disposed on the top of the heating element. The heating member located at the lower portion is heated by flame of the brown gas, and then also the heating member located at an upper portion is heated by flame of high temperature caused by the thermal reaction of the brown gas, which gradually heats the lower heating member. After all, the whole heating members are heated to emit a vast heat. The heating device according to the present invention is very useful as a heat source for all brown gas boilers, heaters, heating furnaces and warm air circulators and can contribute to environmental preservation by making a purified energy, which does not induce environmental pollution.

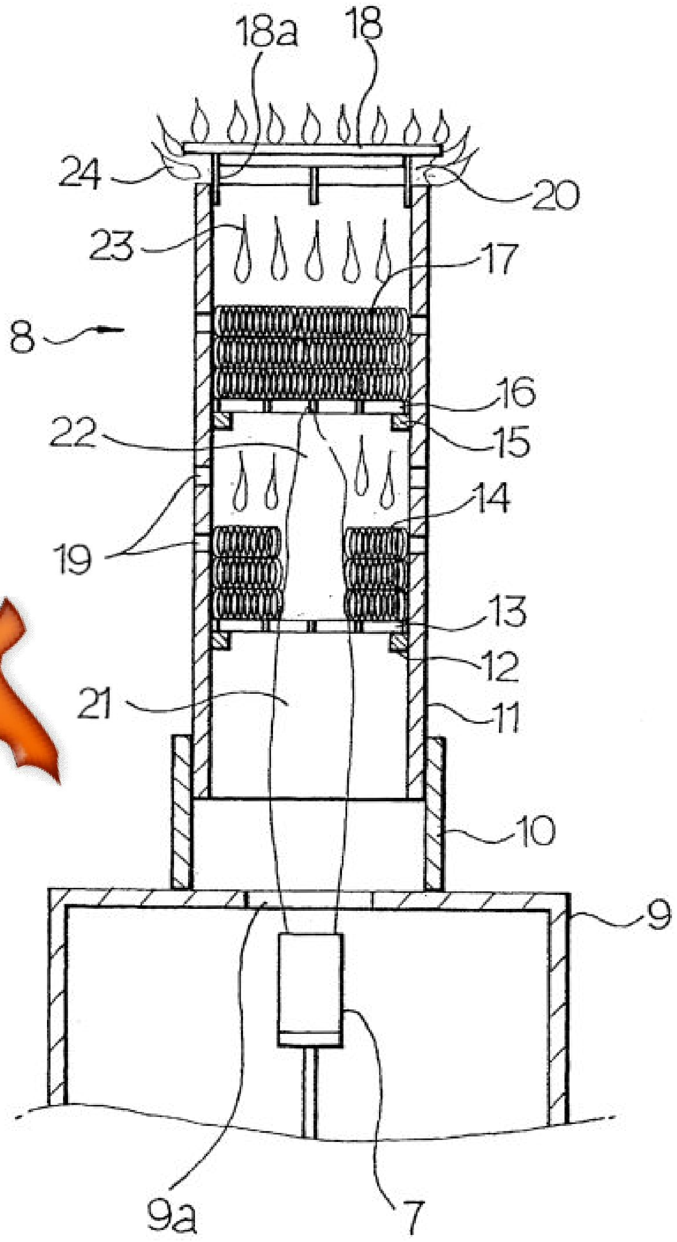

Inventors: Randy Morrell Bunn & Mark Richard Akkerman.
Patent Application № US2010/0187321
"Home heating system utilizing electrolysis of water" – 2010

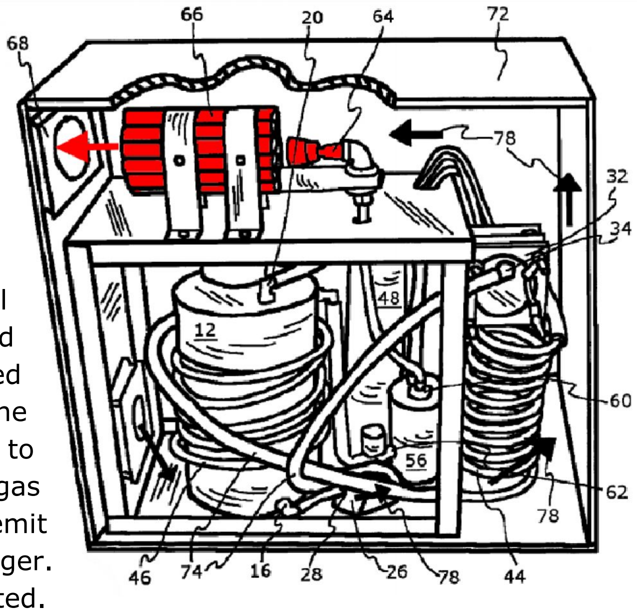

Disclosed is a heating system utilizing electrolysis of water for heating a space. The system includes a tank configured to hold water, a separation cell configured to perform electrolysis of water, a first heat exchanger, a gas bubbler, a burn unit, and a second heat exchanger, where water from the tank is delivered to the separation cell where electrolysis is performed. The fluid produced from the electrolysis is delivered through the first heat exchanger back to the tank, then to the gas bubbler, and finally to the burn unit, where the hydrogen gas produced during electrolysis is burned to emit heat directed at the second heat exchanger. Through the process environment air is heated.

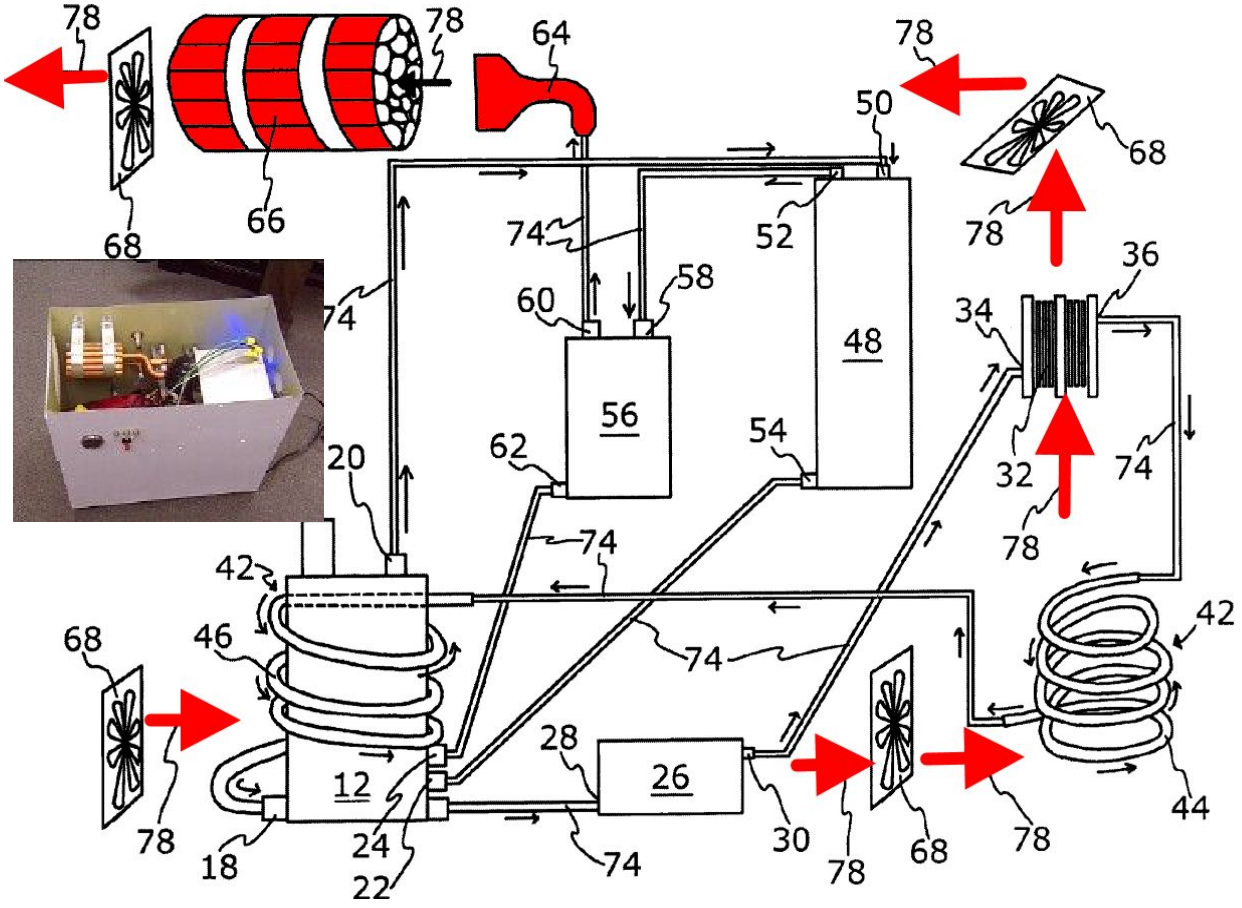

More photos, TV coverage, tests and commercial products in 0.

Inventors: Shawn Mikuski, Jayson Eduard Vajda, Stephen John Gaynes. Patent Application № US2012/0244485-A1
"Heating system with integrated hydrogen generation" – 2012

A heating system for heating a liquid includes a fuel cell having a plurality of charged plates operatively positioned within the fuel cell. An electrolytic solution supply conduit is operatively connected to the fuel cell for supplying electrolytic solution to the fuel cell. In one embodiment, a water conduit supplies water to the fuel cell. The water in the electrolytic solution disposed between said charged plates is converted to **$H_2H_2O_2$ gas.** A torch is provided for receiving the **$H_2H_2O_2$ gas.** A heat exchanger is operatively positioned relative to the torch for receiving heat from the torch and supplying the heat to a manifold for heating a liquid. In one embodiment, the fuel cell and the electrolytic solution are disposed within a first chamber of a reservoir and a cooling fluid is disposed within the second chamber of the reservoir.

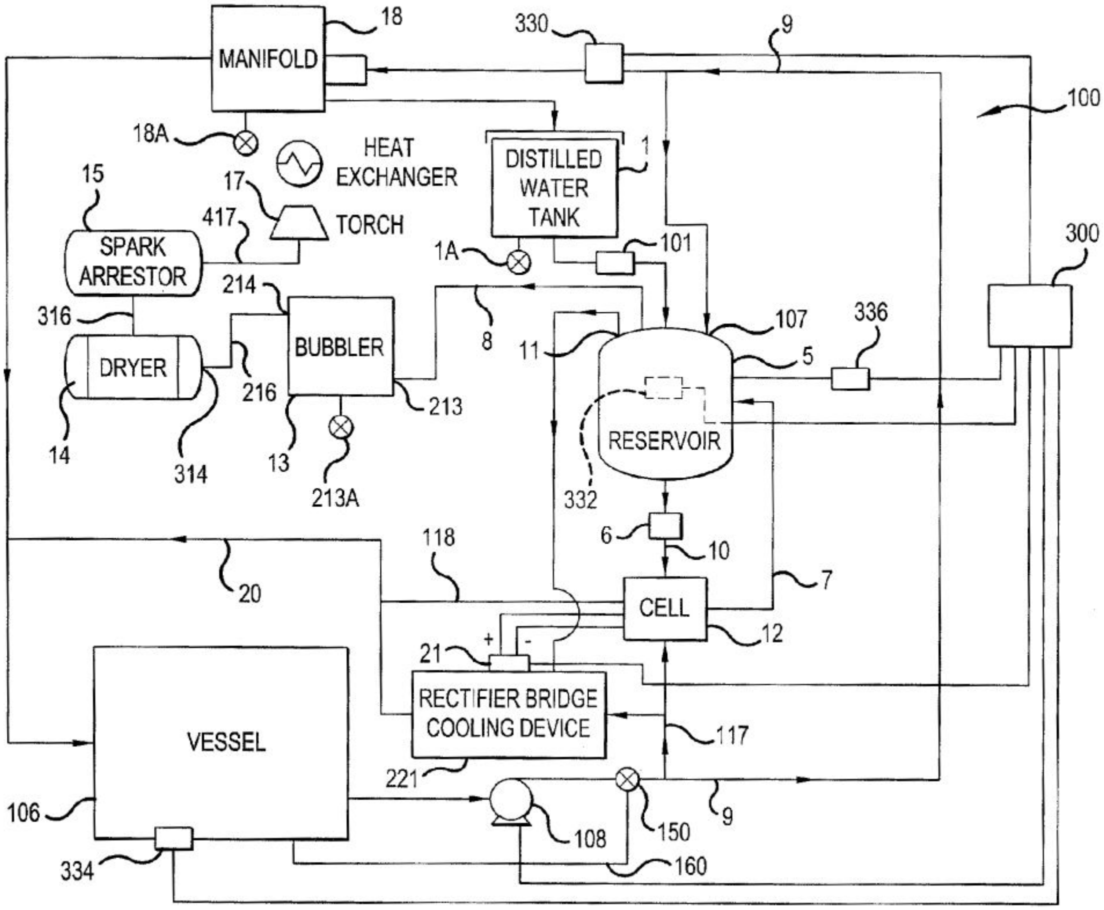

NOTE: In 0, Patents № US2010/0187321 and № US2012/0244485 are provided in further detail, simply because they are more recent – and more advanced in terms of their control systems; however, there is no claim made here that any of the heater inventions presented in this book is better than the others and it is left to the reader to examine them according to his needs and scope of vision.

Therapeutic Brown's Gas Patents

Inventor: Song Doug Kang (Korea). International Patent Application № WO2005/049051 A1 "New use of Brown's Gas and feeding apparatus of the Brown's Gas" – 2005.
US Patent Application № 2007/0104797 – 2007.

Provided is a new use of Brown's Gas, more particularly, to ***the use of Brown's Gas for the treatment of diseases in mammals*** and a Brown's Gas supply apparatus therefor. It is based on the assumption that the Brown's Gas is a medium capable of directly supplying moisture (special form of water according to the third theory of Brown's Gas) to many regions of the body via skin, etc. ***Various effects of the Brown's Gas on the body have been demonstrated.*** In particular, provided is a new use of the Brown's Gas for treatment or alleviation of the symptoms of a lesion in a lesional tissue, cell, or organ of a mammal. ***Provided is also a simple and inexpensive Brown's Gas supply apparatus for supplying pure Brown's Gas suitable to be applied to the human body.***

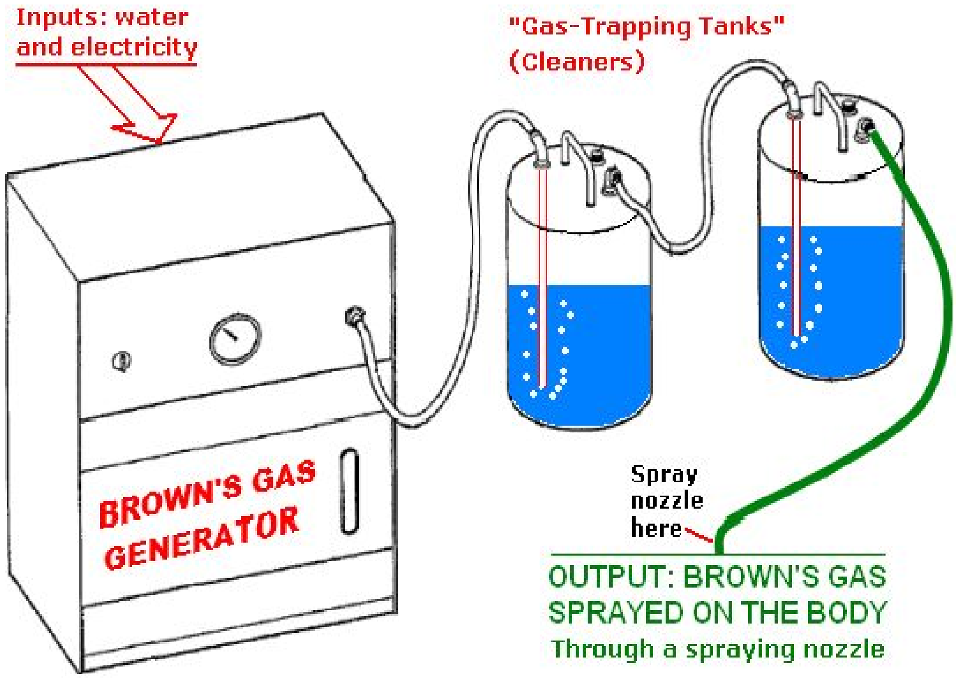

The inventor purchased this Brown's Gas Generator from George Wiseman
www.Eagle-Research.com

List of desirable therapeutic results of Brown's Gas found and demonstrated by the inventor:

1. Elimination or Alleviation of Myalgia

> ***When Brown's Gas was sprayed on the region of the body where myalgia, frozen shoulder, muscular stiffness such as neck stiffness, or bruises is located, alleviation or elimination of pain by rapid relaxation of a muscle was observed. Further, a bruise at a bruised region disappeared and normal skin color was regained.***
>
> ***These phenomena can be explained as follows: sprayed Brown's Gas is absorbed in skin and hydrates the muscle where pain occurs to recover the tissues of the muscle, resulting in elimination of the pain by relaxation of the muscle.***

2. Alleviation of Symptoms and Pain of Rheumatoid Arthritis, Degenerative Arthritis, etc

> ***When Brown's Gas was sprayed onto the lesional regions of patients who suffered from rheumatoid arthritis, knee arthralgia, wrist arthralgia, and knuckle arthralgia, the patients felt less pain and that the joints were relaxed. Acute pain was alleviated by spraying occurred only once. Some patients underwent pain alleviation so that they had a normal life. These therapeutic effects continued for a considerably extended period of time. Furthermore, in patients who suffered from an aftereffect of knee joint surgery (cruciate ligament implant surgery, cartilage implant surgery), recovery of joint function, together with pain alleviation, was observed. Improvement in the symptoms of Achilles myositis was also observed.***
>
> ***Like for myalgia, these phenomena can be explained as follows: Brown's Gas is absorbed through skin and supplies moisture to joint synovial fluid to lubricate joints. There is another interpretation based on the second theory of Brown's Gas that monatomic hydrogen contained in Brown's Gas serves as active hydrogen in the body. That is, rheumatoid arthritis is known to be an autoimmune disease that spontaneously creates an inflammatory substance that attacks joint synovium, causing joint inflammation. High level of the inflammatory substance intensifies pain, whereas low level of the inflammatory substance alleviates pain. Even though the creation of the inflammatory substance is attributed to a genetic factor and an environmental factor, the gene of interest has not been identified. However, it is known that active oxygen plays an important role in the creation of the inflammatory substance. A serum test shows a remarkably reduced level of an antioxidative ingredient in a patient with rheumatoid arthritis, relative to a normal person. In this respect, many attempts have been made to use an antioxidant as an anti-inflammatory agent. Thus, it is thought that active hydrogen, known to serve as an antagonist to active oxygen in the body, alleviates rheumatoid arthritis. Further, the***

> ***spraying of Brown's Gas improved the node and inflammation by gout, which can also be explained similarly to that described above.***

3. Alleviation of the Symptoms of Intervertebral Disc

> ***Like for arthritis, patients with intervertebral disc experienced alleviation of pain and symptoms after spraying Brown's Gas on a lesional region. The alleviation of pain and symptoms is attributed to hydration of the lesional tissue of intervertebral disc by Brown's Gas absorbed through skin.***

4. Elimination or Alleviation of Headache

> ***When Brown's Gas was sprayed on the necks of patients with severe headache, including chronic headache, migraine, and acute headache by impact applied to the cervical vertebrae in car accident, the patients had a clear head and rapid alleviation or elimination of headaches. Further, the therapeutic effect continued over a prolonged period of time (six months, at present) after therapy with Brown's Gas.***
>
> ***These phenomena can be explained as follows: sprayed Brown's Gas is absorbed in neck skin and hydrates neck muscles. Therefore, muscle tissues are relaxed and thus contracted blood vessels are restored to normal. As a result, blood flow increases and sufficient oxygen supply to the brain is achieved, resulting in disappearance of headache.***

5. Elimination of Inflammation in Wounded Region and Body Region Affected by Bacterial Inflammation, or Rapid Recovery of the Affected Regions

> ***When Brown's Gas was directly sprayed on a wounded region of the body, it was observed that the wound was rapidly cured. Furthermore, when Brown's Gas was sprayed on the body region affected by bacterial inflammation such as laryngitis, otitis media, and sinus infections (ozena), alleviation or rapid elimination of inflammation was observed. This might be possible because Brown's Gas destructs or prevents the growth of anaerobic microorganism in the wounded region and various microorganisms in the body region affected by inflammation, and at the same time, helps cell restoration in the wounded region and the body region affected by inflammation. The destruction and prevention of the growth of microorganisms can be sufficiently explained assuming that Brown's Gas contains large amounts of reactive oxygen, in particular monatomic and diatomic oxygen based on the second theory of Brown's Gas.***

6. Prevention of Inflammatory and Allergic Cutaneous Reaction

When Brown's Gas was sprayed on the skin where allergic reaction occurred, complete disappearance of allergy symptoms was observed. Furthermore, when Brown's Gas was sprayed on the skin where non-infectious inflammatory reaction occurred, remarkable improvement of inflammation was observed by spraying occurred only once. It was also observed that the spraying of Brown's Gas is effective for the treatment of eye's movement relating nerve disorder due to inflammation in nerve cells at the back part of the head. These therapeutic effects are attributed to cell restoration by hydration of target skin cells by Brown's Gas.

It is expected that the effect of Brown's Gas on skin can be extended to skin tissue restoration, moisturizing, anti-aging, etc. Therefore, Brown's Gas can also be used as a skin-moisturizing agent for cosmetic purpose.

7. Pain Removal or Alleviation

When Brown's Gas was applied to patients with sciatica, pain in right pelvis, pain by the bone fracture of ankle joint, pain by the bone fracture of wrist joint, pain by herpes shingles, toothache, menstrual pain, etc., considerable pain alleviation was observed.

8. Ocular Disease

Patients with ocular diseases such as simple ocular congestion and afterimage, sties, epidemic keratoconjunctivitis, glaucoma, and cataract experienced considerable disease improvement effects by spraying of Brown's Gas.

9. Parkinson's Disease

When Brown's Gas was sprayed on patients with Parkinson's disease, considerable improvement in paralysis of limbs, speech disorder, dribbling by excessive salivation, head shaking, trembling of hands, etc. was observed.

Furthermore, symptoms removal, improvement, or relief in insomnia by nervousness, myasthenia by muscle weakness, chilly hands and feet by blood circulation dysfunction, asthma, gastritis and gastric ulcer, panic disorder, diabetic peripheral neuropathy, trouble in the left chest by stricture of the heart, breathing discomfort, etc. was observed.

In addition to cure or improvement of symptoms during or after therapy with Brown's Gas, patients experienced the following common effects.

10. Lightness and clearness of the head.

11. Lightness of the body and good condition.

12. Disappearance of the dimness and redness in the eyes.

13. Warm hands and feet and perspiration.

14. Good sleep.

> *These effects are attributed to promoted blood circulation by spraying of Brown's Gas, resulting in smooth blood supply to various regions in the body.*

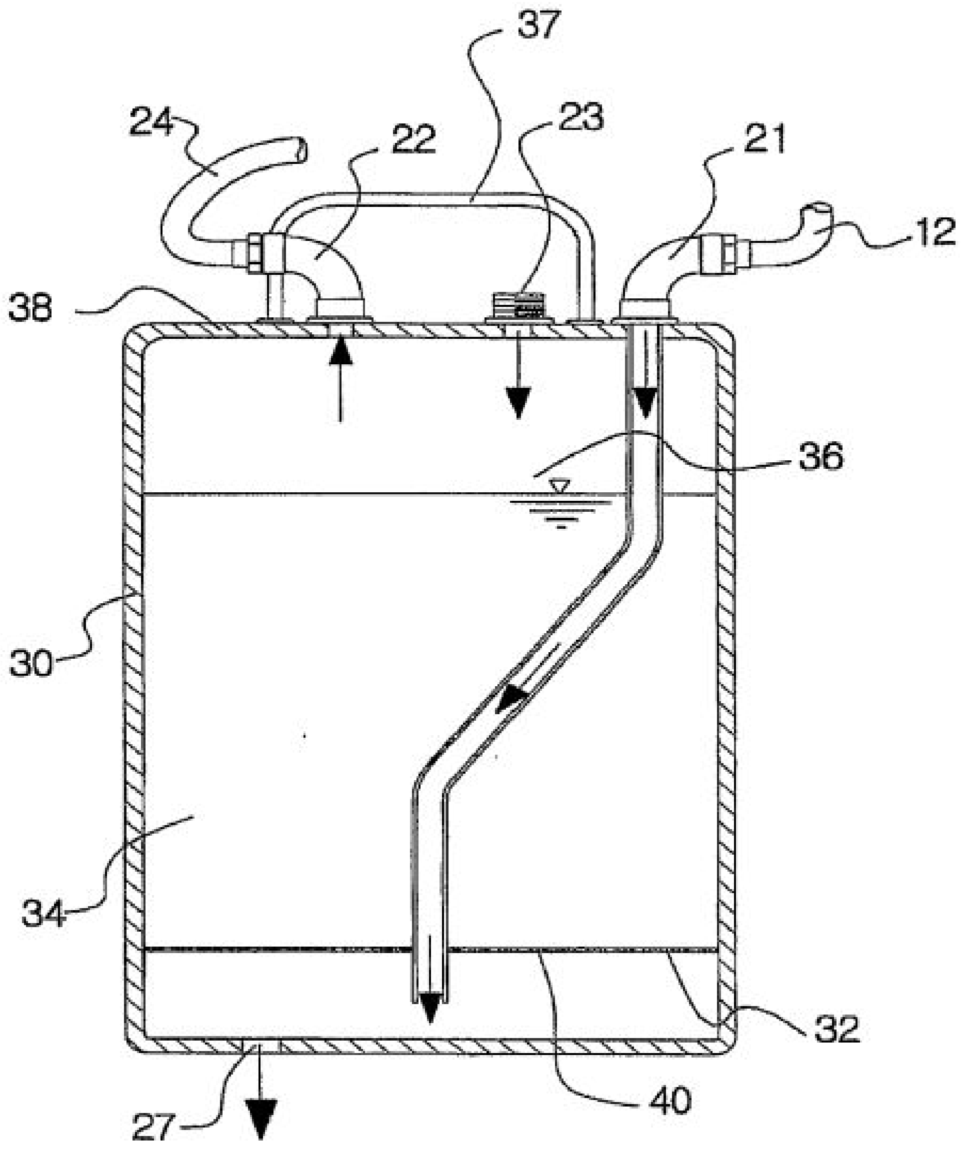

PROOF OF THIS INVENTION'S THERAPEUTIC EFFECT:

This is just 1 OF 39 CASE STUDIES LISTED!!

Subject: female, age 72.

Symptoms: degenerative arthritis of two knees; severe pain and stiffness in standing and walking, and numbness.

Treatment and Effect:

(1) Brown's Gas was sprayed on the right knee joint for 30 minutes and on the left knee joint for 30 minutes with a 20-minute pause between the two spraying. Immediately after the spraying, the joints were relaxed and the pain completely disappeared. The patient could walk at a brisk pace on a flat ground with no assistance and did not feel severe pain when she went up and down the stairs.

(2) At the next day after the treatment, the patient felt pain in the knee joints in walking even though the level of the pain was remarkably slight, showing that the therapeutic effect was maintained during the post-treatment period.

(3) At three days after the treatment, a secondary treatment was performed in the same manner as in the section (1).

FIG. 5A

FIG. 5B

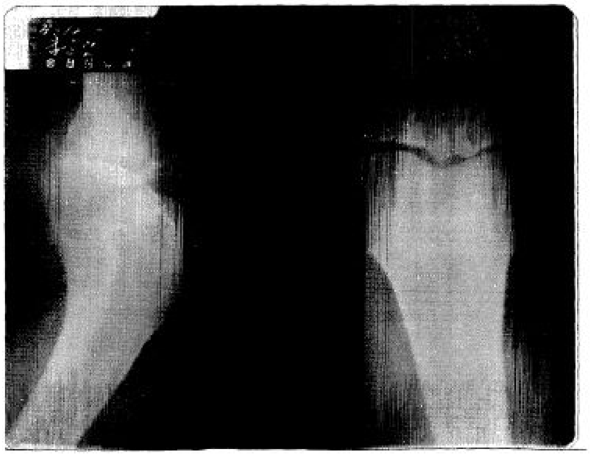

(4) At two weeks after the secondary treatment, the therapeutic effects were maintained to an extent that the knee joints were relaxed and almost no pain was felt.

The therapeutic effects were identified by X-ray images before and after the treatment with Brown's Gas. FIG. 5A is an X-ray image before the primary treatment of the section (1) (Nov. 21, 2003) and FIG. 5B is an X-ray image at two weeks after the secondary treatment of the section (3) (Dec. 31, 2003).

Updates, discoveries, testimonials, resources and products
by George Wiseman regarding the use of Brown's Gas for health:
www.eagle-research.com/cms/category/browns-gas/browns-gas-health-enhancement

Another company that makes health-and-beauty products based
on these discoveries is Epoch Energy Technology Corp., Taiwan
http://www.oxy-hydrogen.com/s/2/news.html

Inventors: Hans Becker and Robert Moroney. Patent № 7160434 “Therapeutic electrolysis device” – 2007

EXCERPTS from this Patent: “The present invention relates to an electrolysis device for use in connection with therapeutic purposes. In particular, the present invention relates to a device capable of efficiently ionizing water for therapeutic uses.---Electrolysis involves ionizing water by passing an electrical current through water.---By creating a preponderance of either negative ions or positive ions in water, desirable effects can be realized. For example, it is believed that ***charged particles can be drawn from the body*** by placing a body part, such as the feet, in a water bath having a preponderance of negative ions or of positive ions.---it would be desirable to provide such a device that was ***economical to produce***.”

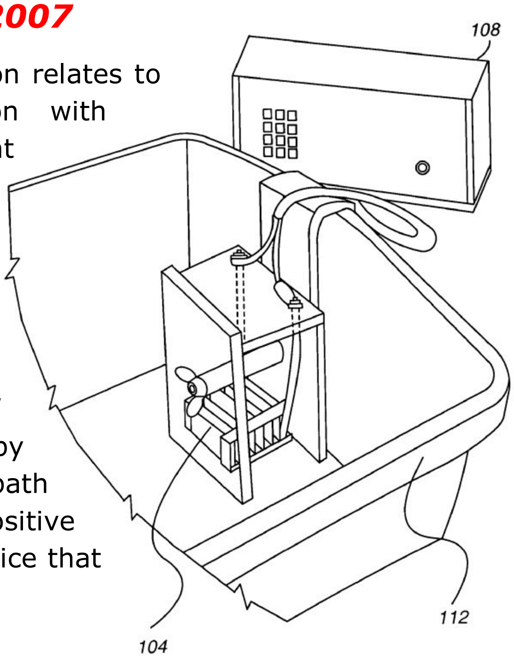

Inventor: Hsin-Yung Lin. Patent App. № 103800979 (China) 产生器保健气体 (Gas generator for health use) – 2014, also 20140374243 (USA)

ABSTRACT: A gas generator for health use is provided. The gas generator for health use includes an electrolysis device for electrolyzing water and producing a gas mixture that includes hydrogen and oxygen. The gas generator for health use further includes a gas mixing system coupled to the electrolysis device to receive the gas mixture. The gas mixing system is adapted to mix the gas mixture with water vapor, an atomized medicinal liquid, a volatile essential oil or a combination thereof to produce a health gas for being inhaled by a user.

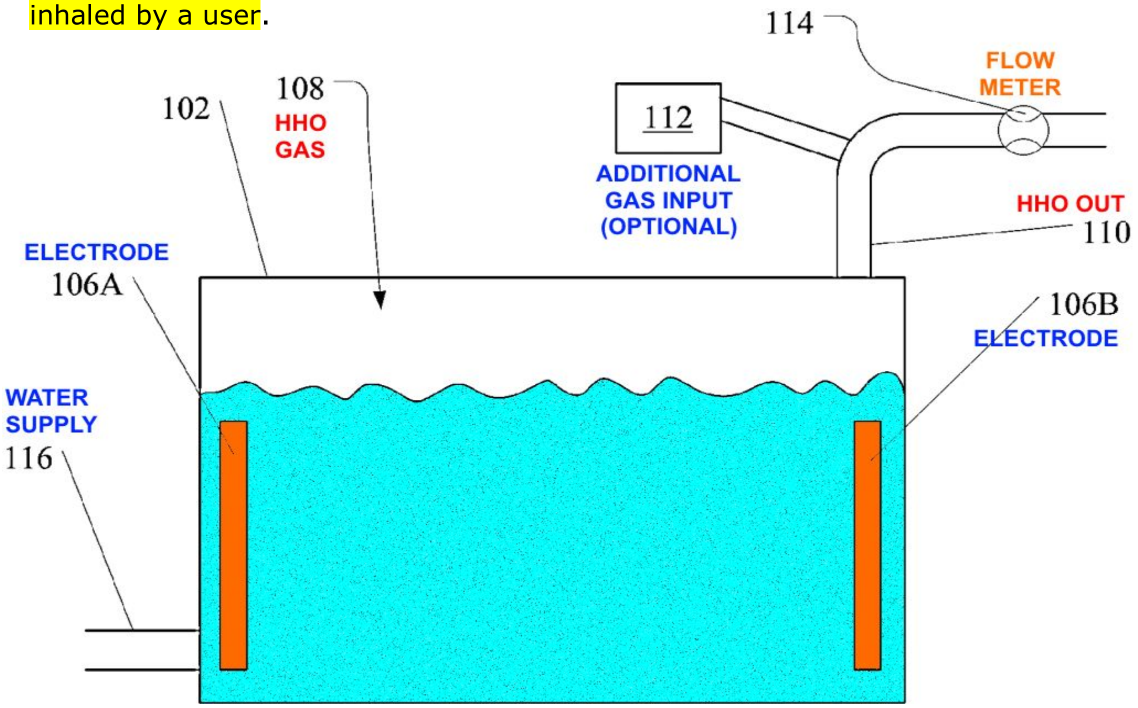

Ozzie's Non-Politically-Correct Statement on PUBLIC HEALTH

Dear reader,

Please observe very closely the ***BROAD AND DETAILED*** scientific proof provided by scientist and inventor Song Doug Kang in the documents referenced above. This good Korean man made his knowledge freely available to the world in 2004 (which is also the year when he made it known to the US Government via its Patent Office). Hans Becker and Robert Moroney gave it further validation in their 2007 US Patent cited above.

Consider the potential harm to the health of Mankind, and the accumulated suffering of many patients if this is NOT accepted at least as an alternative treatment to all the diseases and pains listed by Mr. Kang. In other words, let it be known – and let the patients choose if they want to try it out.

Let me take this one step further: I am holding a firm conviction that it would be a ***SERIOUS CRIME AGAINST HUMANITY*** for anybody to block, criticize or ban further FREE experimentation aimed to alleviate patients' suffering with these affordable inventions and similar ones.

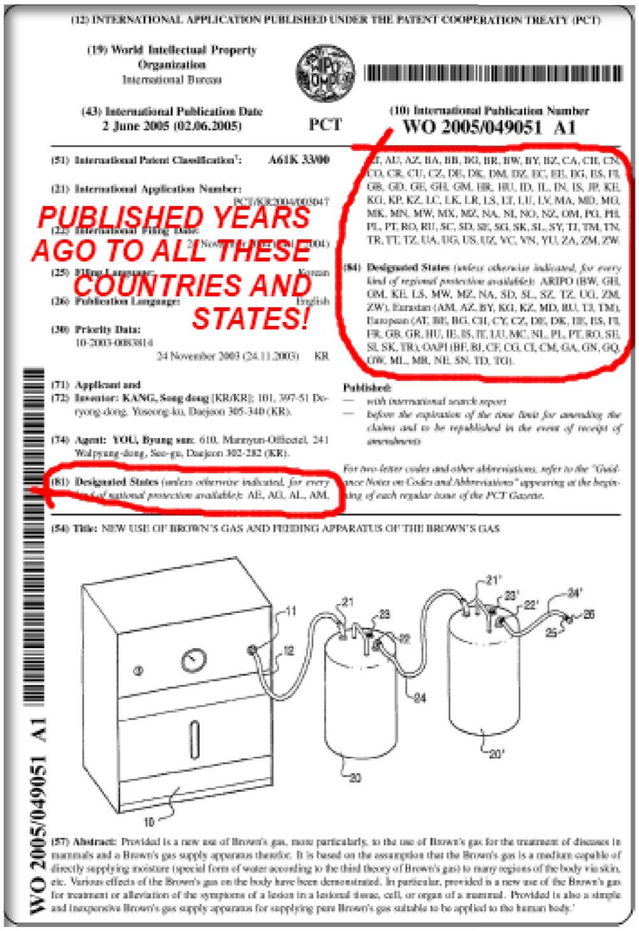

(12) INTERNATIONAL APPLICATION PUBLISHED UNDER THE PATENT COOPERATION TREATY (PCT)

(19) World Intellectual Property Organization
International Bureau

(43) International Publication Date
2 June 2005 (02.06.2005)

PCT

(10) International Publication Number
WO 2005/049051 A1

(51) International Patent Classification⁷: A61K 33/00

(21) International Application Number: PCT/KR2004/003047

(22) International Filing Date: 24 November 2004 (24.11.2004)

(25) Filing Language: Korean

(26) Publication Language: English

(30) Priority Data:
10-2003-0083814 24 November 2003 (24.11.2003) KR

(71) Applicant and
(72) Inventor: KANG, Song doug [KR/KR]; 101, 397-51 Doryong-dong, Yuseong-ku, Daejeon 305-340 (KR).

(74) Agent: YOU, Byung sun; 610, Mannyun-Officetel, 241 Walpyung-dong, Seo-gu, Daejeon 302-282 (KR).

(81) Designated States *(unless otherwise indicated, for every kind of national protection available)*: AE, AG, AL, AM, AT, AU, AZ, BA, BB, BG, BR, BW, BY, BZ, CA, CH, CN, CO, CR, CU, CZ, DE, DK, DM, DZ, EC, EE, EG, ES, FI, GB, GD, GE, GH, GM, HR, HU, ID, IL, IN, IS, JP, KE, KG, KP, KZ, LC, LK, LR, LS, LT, LU, LV, MA, MD, MG, MK, MN, MW, MX, MZ, NA, NI, NO, NZ, OM, PG, PH, PL, PT, RO, RU, SC, SD, SE, SG, SK, SL, SY, TJ, TM, TN, TR, TT, TZ, UA, UG, US, UZ, VC, VN, YU, ZA, ZM, ZW.

(84) Designated States *(unless otherwise indicated, for every kind of regional protection available)*: ARIPO (BW, GH, GM, KE, LS, MW, MZ, NA, SD, SL, SZ, TZ, UG, ZM, ZW), Eurasian (AM, AZ, BY, KG, KZ, MD, RU, TJ, TM), European (AT, BE, BG, CH, CY, CZ, DE, DK, EE, ES, FI, FR, GB, GR, HU, IE, IS, IT, LU, MC, NL, PL, PT, RO, SE, SI, SK, TR), OAPI (BF, BJ, CF, CG, CI, CM, GA, GN, GQ, GW, ML, MR, NE, SN, TD, TG).

Published:
- *with international search report*
- *before the expiration of the time limit for amending the claims and to be republished in the event of receipt of amendments*

For two-letter codes and other abbreviations, refer to the "Guidance Notes on Codes and Abbreviations" appearing at the beginning of each regular issue of the PCT Gazette.

(54) Title: NEW USE OF BROWN'S GAS AND FEEDING APPARATUS OF THE BROWN'S GAS

(57) Abstract: Provided is a new use of Brown's gas, more particularly, to the use of Brown's gas for the treatment of diseases in mammals and a Brown's gas supply apparatus therefor. It is based on the assumption that the Brown's gas is a medium capable of directly supplying moisture (special form of water according to the third theory of Brown's gas) to many regions of the body via skin, etc. Various effects of the Brown's gas on the body have been demonstrated. In particular, provided is a new use of the Brown's gas for treatment or alleviation of the symptoms of a lesion in a lesional tissue, cell, or organ of a mammal. Provided is also a simple and inexpensive Brown's gas supply apparatus for supplying pure Brown's gas suitable to be applied to the human body.'

WO 2005/049051 A1

PUBLISHED YEARS AGO TO ALL THESE COUNTRIES AND STATES!

Here, I said it. I am not a lawyer and this is not a legal statement. Nor is it a medical statement. This is just my personal opinion. Now I leave it to the patients, their loved ones **and their lawyers** to carry the message the rest of the way.

~Ozzie Freedom

P.S. I've had my own personal success with applying Brown's Gas to my drinking water. And I have heard (and filmed in the USA) success stories by others. This principle works and it works well and fast.

Waterfuel for Your Lab

This one, for example, can be used by Big Oil for better business – see official document:

Inventor: Olivier Issenman (France). Patent App. № EP19900402743 (Europe) "Apparatus for the production by electrolysis of water of a hydrogen-oxygen gaseous mixture used for feeding an ionisation flame" – 1991, also DE69012266 D1/T2 (Germany) and EP0422994 (Europe)

The present invention relates to a preparation device, by electrolysis of water, a gas mixture of oxygen and hydrogen to be fed to a flame ionization. As is known, is used in many laboratory instruments, small flames for certain effects, and particularly used for the ionization of organic molecules, which makes them readily identifiable. In the detector to detect the existence of small traces of molecules, it is common to use a flame fed with a non-organic fuel, that is to say containing no carbon organic carbon.

Fig. 1

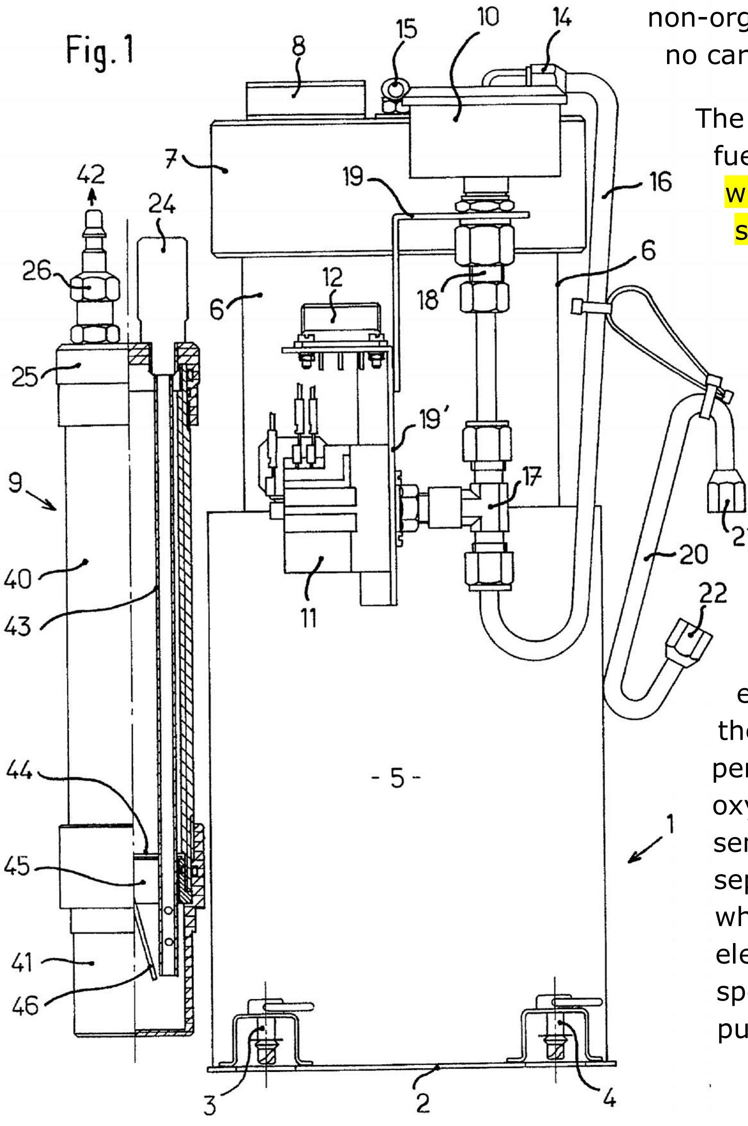

The most commonly used in this case fuel is hydrogen for ionizing particles which are then collected by a suitable electrode system.

The hydrogen which is necessary may, for example, be provided in pure form by a pressure bottle, or be prepared by a hydrogen generator which, in the case of a laboratory apparatus which provides per minute some cubic centimeters of this gas.

The usual equipment commercially appeal to the electrolysis of water and ensure by their structure and functioning, a perfect separation of hydrogen and oxygen, including through the use of semi-permeable membranes separation and platinum electrodes, which requires the use, as an electrolyte, a bi-distilled water with a specific amount of a separable body pure.

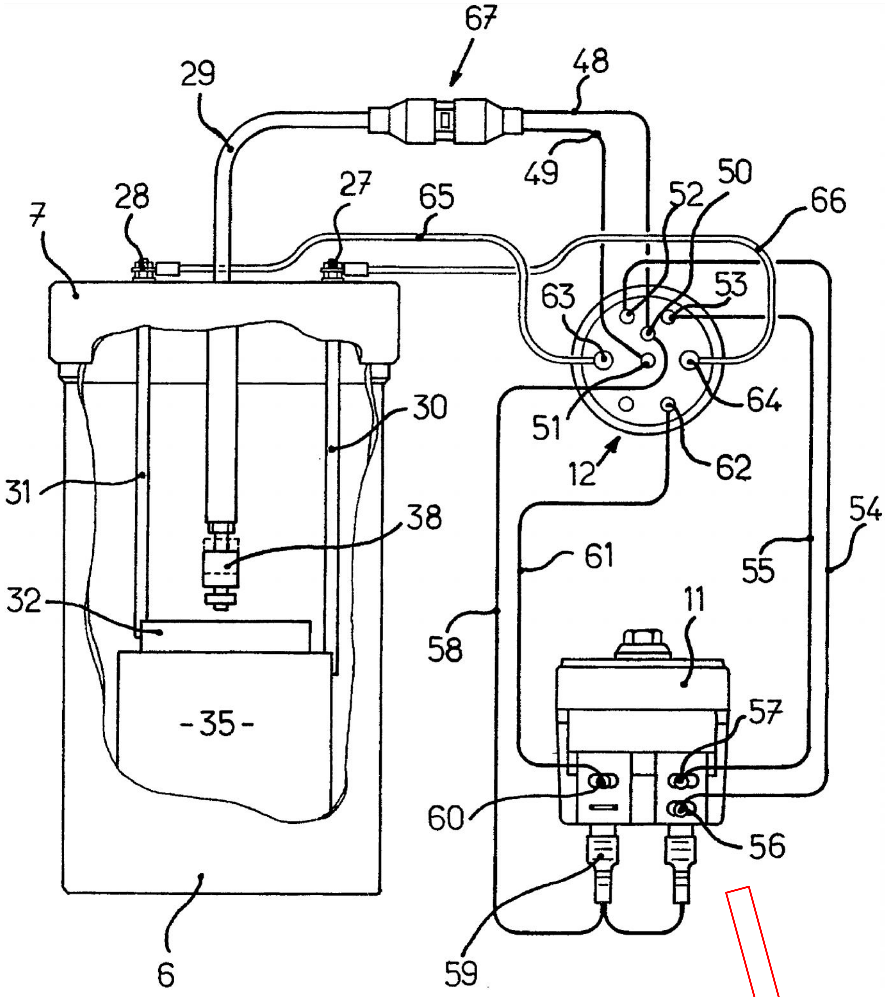

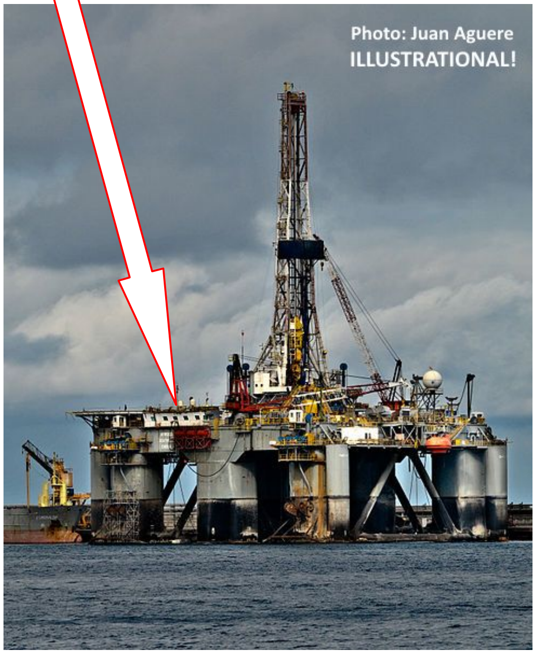
Photo: Juan Aguere
ILLUSTRATIONAL!

Such generators are expensive, fragile devices that require great care and constant maintenance. Their use is justified when one wishes to use absolutely pure hydrogen. When it is possible, when the oxygen supply of the ionisation flame, simultaneously use of hydrogen as a fuel, it is enough of a fuel mixture consisting of a mixture of oxygen and hydrogen (containing no organic traces body), as produced for example by electrolysis.

The invention thus relates essentially a water electrolysis device, providing a stoichiometric mixture of oxygen and hydrogen that is ready to burn easy to handle while maintaining the desired security, said device picked up a structure is easily transportable on the site, ***for example, in an analysis cabin located on a place of oil drilling.***

Kanarev – Patents from Russia

Waterfuel Patents by scientists of Kuban State Agrarian University, Russia, led by Prof. Philipp M. Kanarev

So far we've mostly exposed work done in the West, but tremendous Waterfuel work has been done, proven and experimented in East Europe, mainly in Russia and other FSU (Former Soviet Union) countries. The list of Russian Patents below was provided by Professor Kanarev and published on the web.

Together with Kanarev, other Russian inventors who are credited for these inventions are: Peysakhovich, Podobedov, Tlishev and Bebko. They produced a large number of patents and scientific papers on the subject of electrolysis and Waterfuel. In his teachings, many of which have been translated into English (I'm giving you references below) Kanarev shows strong empathy to the environment and the non-business importance of Waterfuel.

Plasma-Electrolytic Cells

Russian Patent № 2157861
"Device for obtaining thermal energy, hydrogen and oxygen"
Date: 25.11.1998

The Diagram shows Kanarev's plasma-electrolysis reactor from this Patent.

Its main parts are:

1 – Housing
4 – Bottom Cover
5 – Top Cover
10 & 14 – Anodes
11 & 15 – Cathodes

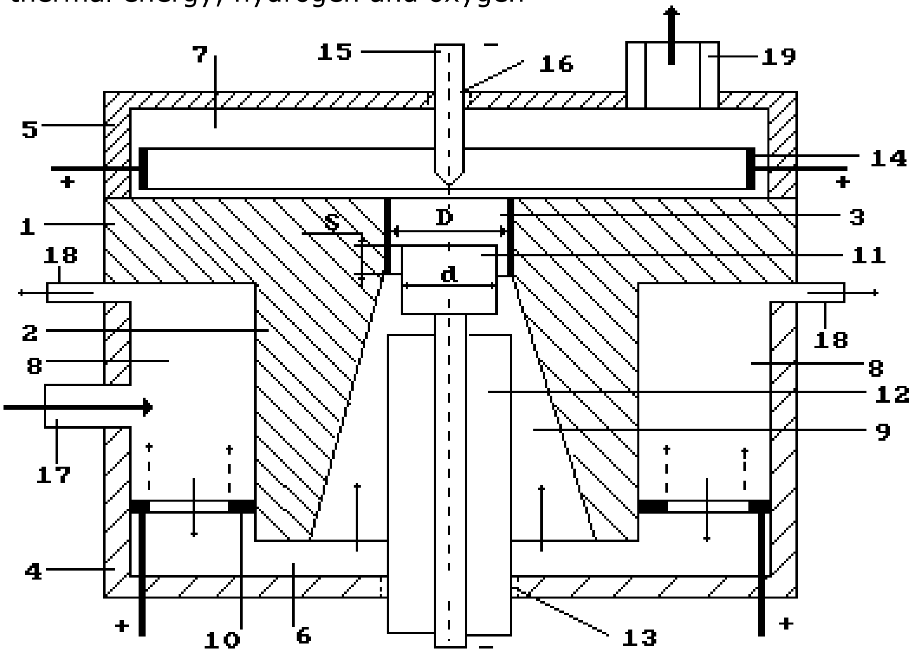

Russian Patent № 2157862
“Device for obtaining thermal energy and mixes of gases”
Date: 25.11.1998

The Diagram shows Kanarev’s plasma-electrolysis reactor of gas mix from this Patent:

1–Reactor housing
2–reactor top cover
3–anode
4–cathode (outlet pipe)
5–inlet pipe
6 & 7–bushings.

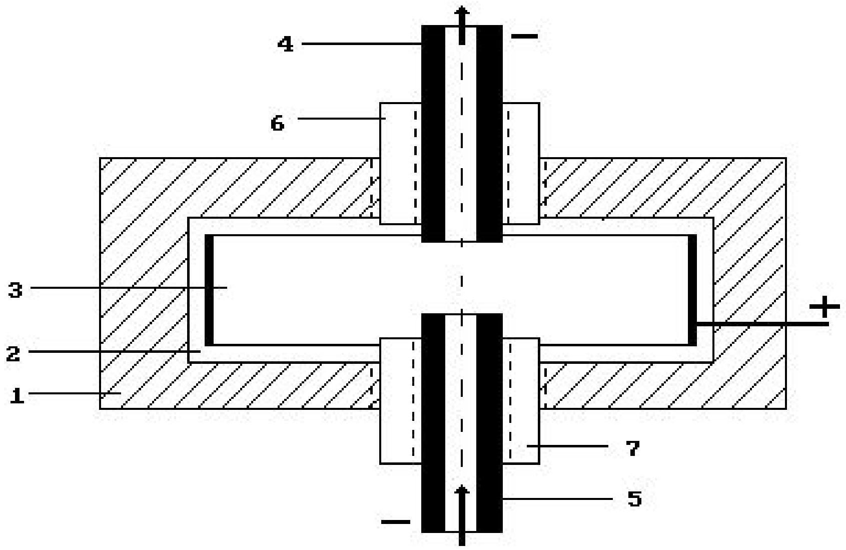

Russian Patent № 2157427
“Device for obtaining thermal energy, hydrogen and oxygen”
Date: 26.01.1999

The Diagram shows Kanarev’s plasma-electrolysis reactor of gas mix from this Patent. Its main parts are:

1–Reactor Top Cover
3–Reactor Housing
6–Cathode
9–Anode
11–Solution Holder
16–Coolant
20–Gas Outlet Pipe
23–Anemometer (gas flow gauge).

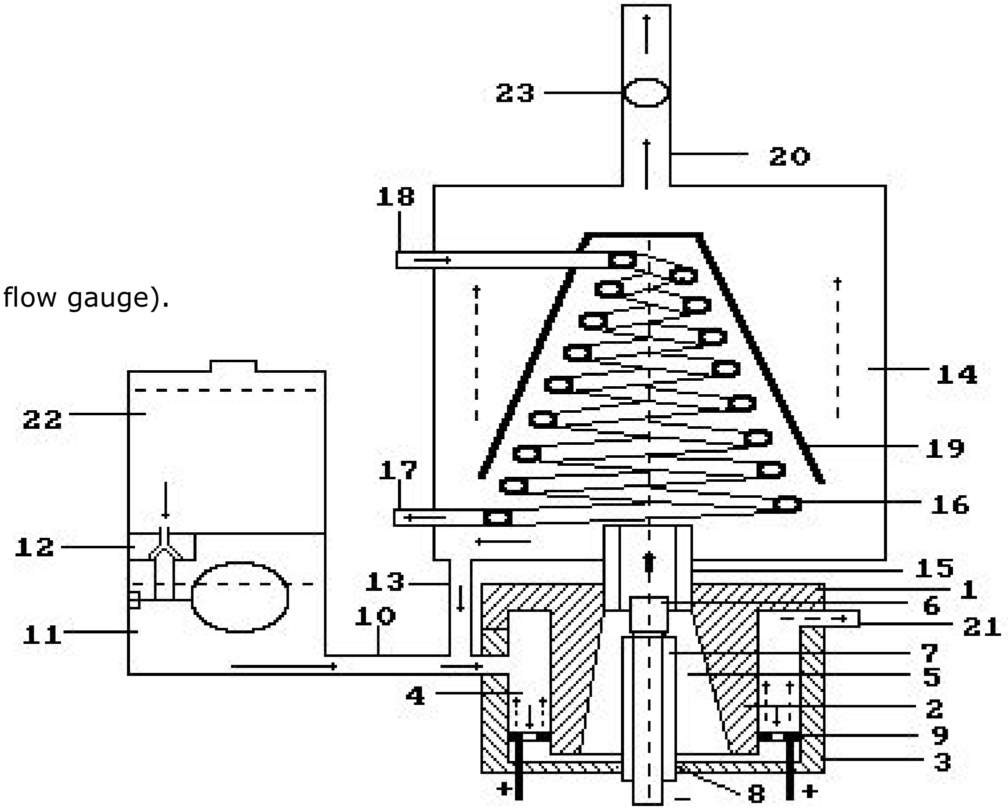

A more detailed diagram of this Reactor is given below:

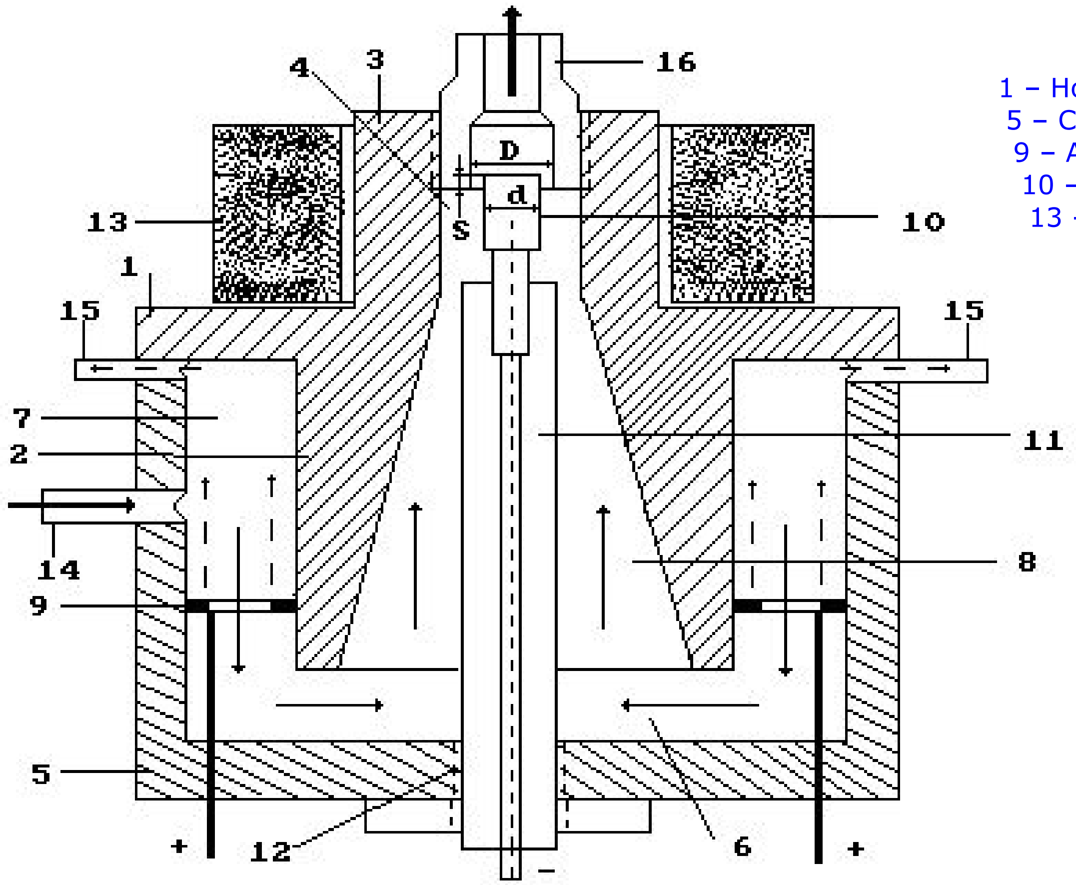

1 – Housing
5 – Cap
9 – Anode
10 – Cathode
13 – Magnet

Russian Patent № 2167958
“Device for obtaining thermal energy, hydrogen and oxygen”
Date: 02.06.1999

Russian Patent № 2175027
“Device for obtaining thermal energy, hydrogen and oxygen”
Date: 03.06.1999

Russian Patent № 2213162
“Device for obtaining thermal energy, hydrogen and oxygen”
Date: 06.03.2001

Russian Patent № 2186153
“Cathode for a plasma-electrolytic reactor.”
Date: 28.06.2001

Cells for Cold Fusion

Russian Patent № 2210630 →

"Device for obtaining a gas mix and ***Cold Fusion*** of atoms of chemical elements"

Date: 04.09.2002

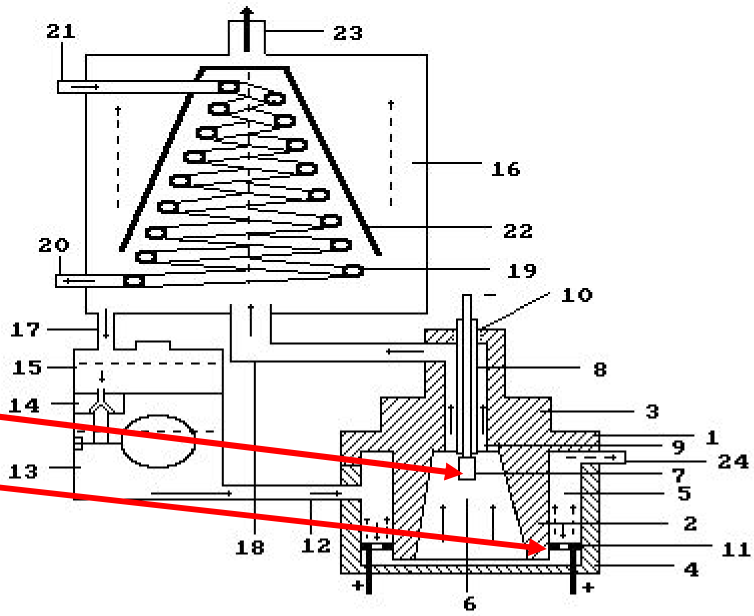

Cathode

Anode

Low Current Electrolyzers

Russian Patent № 2227817 →

"Electrolytic cell of Low-current Electrolyzer for obtaining hydrogen from water"
Date: 27.04.2004

See Chapter 9 in which Kanarev refers to this patent.

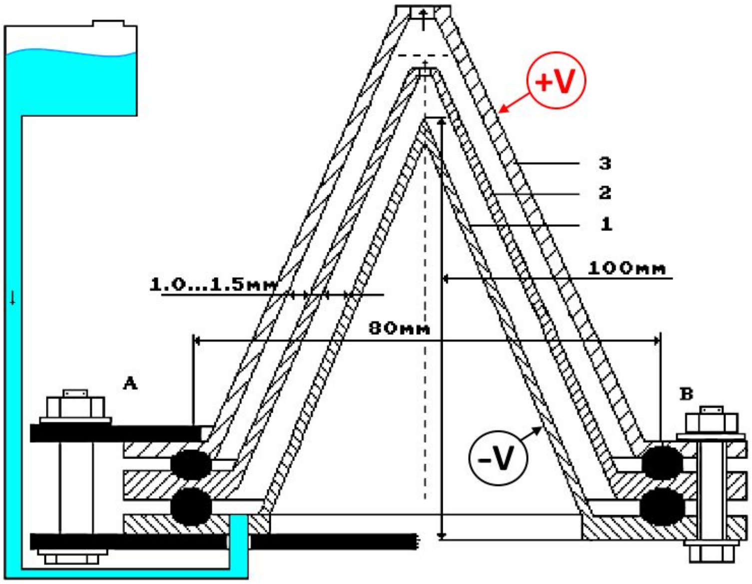

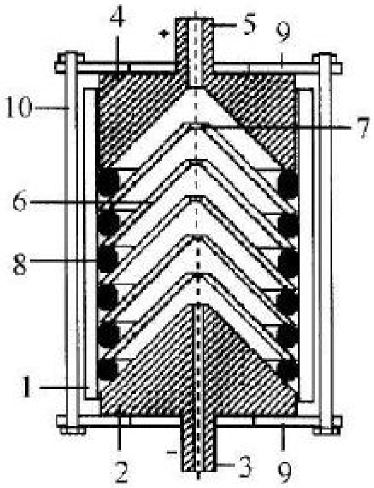

←← Russian Patent № 2232829
"Device for obtaining hydrogen and oxygen"
Date: 20.07.2004

Russian Patent № 2277138
"Device for obtaining hydrogen and oxygen"
Date: 27.05.2006

Patent Application № 2006103430
"Method of obtaining energy for electrolysis and a device for its realization"
Date: 2006

Thermal Pre-Plasma Cells

Russian Patent № 2228390
"Device for obtaining thermal energy, hydrogen and oxygen"
Date: 10.05.2004
Download: www.rexresearch.com/kanarev/ru2228390.pdf

Russian Patent № 2256006
"Device for obtaining thermal energy, hydrogen and oxygen"
Date: 10.07.2005
Download: www.rexresearch.com/kanarev/ru2256006.pdf (bad font, drawing OK)

Russian Patent № 2256007
"Device for obtaining thermal energy, hydrogen and oxygen"
Date: 10.07.2005
Download: www.rexresearch.com/kanarev/ru2256007.pdf (bad font, drawing OK)

Russian Patent № 2258098
"Device for obtaining thermal energy, hydrogen and oxygen"
Date: 10.08.2005
Download: www.rexresearch.com/kanarev/ru2258098.pdf

Russian Patent № 2258097
"Device for obtaining thermal energy, hydrogen and oxygen"
Date: 10.08.2005
Download: www.rexresearch.com/kanarev/ru2258097.pdf

Russian Patent № 2260075
"Device for obtaining thermal energy, hydrogen and oxygen"
Date: 10.09.2005
Download:

Patent Application № 20313344
"Device for obtaining heat, hydrogen and oxygen"
Date: 2003(??)

Patent Application № 2003137263
"Device for obtaining heat, hydrogen and oxygen"
Date: 2003

Patent Application № 2006100216
"Method and device for obtaining and uses of heat"
Date: 2006

To search all Kanarev's Patents in the worldwide database visit: http://worldwide.espacenet.com/searchResults?bookmarkedResults=true&submitted=true&DB=EPODOC&IA=Kanarev

Do you want to see proof on how one of Kanarev's inventions multiplies energy input 11-fold or more? Go to Chapter 15.

WHAT YOU NEED TO UNDERSTAND ABOUT RUSSIAN INVENTIONS

(by Ozzie)

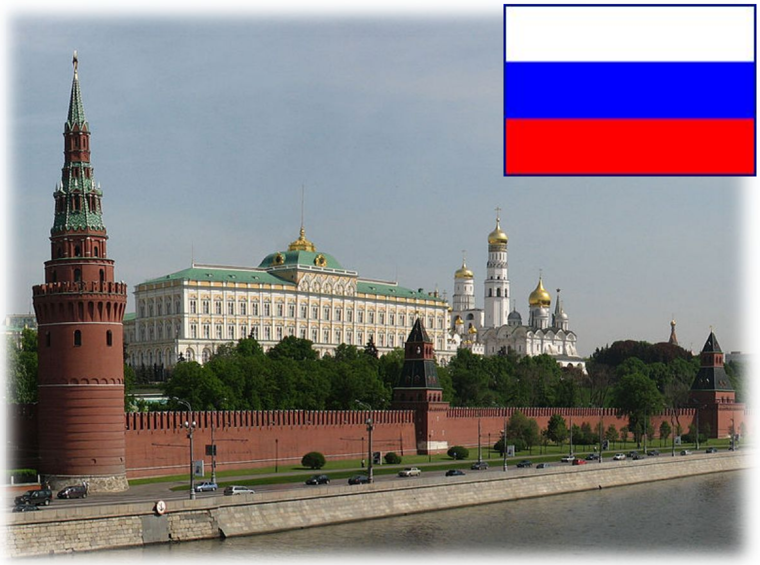

You may have asked yourself: "If Russian inventions are so fabulous as they claim, then why don't we see them out here?"

Good question. But not easy to answer.

I've been to Russia and had a chance to meet some of its brightest scientists. My impression is that there are several reasons why we don't see many scientific products or even hear much about technologies they have been developing there for ages.

One of the more obvious reasons is the language barrier – even though I've been a Senior Tech Writer for years, it was hard to understand their far-reaching technologies even via an excellent (technical) interpreter. They think differently about many scientific matters. For example "magnetism" in Russia is bread and butter stuff whereas many Westerns think it is crackpot science. You have to understand that Russia and Ukraine have a tradition of very strict control over everything, and science matters are no different – the proper channels there would not have approved any of the Russian Patents presented here if they thought those were hot air ideas. The authorities thoroughly check every paper, every machine and every factory. This is no proof that it's all error-free, but yet another aspect you should understand.

Another strong point is patriotism. The Russian government invests a lot in education and science, and wants to keep their hard-earned intellectual property at home, as you can see in these official documents:

1. www.mid.ru/bdomp/ns-osndoc.nsf/1e5f0de28fe77fdcc32575d900298676/2deaa9ee15ddd24bc32575d9002c442b!OpenDocument
2. http://www.rupto.ru/rupto/nfile/3b05468f-4b25-11e1-36f8-9c8e9921fb2c/Civil_Code.pdf

Furthermore, even without the government controlling the information, many of the scientists and inventors themselves are less than eager to divulge information to the West, because they have a strong personal conviction that it should stay the property of the Motherland, Mother Russia. I can understand their standpoint. Can you?

This is not Russian propaganda and you're welcome to make up your own mind. I just wanted to give you a sneak peek behind the "curtain."

Russian Patent № 2227817

"ELECTROLYTIC CELL OF LOW-CURRENT ELECTROLYZER FOR OBTAINING HYDROGEN FROM WATER"

PATENT DETAILS

Publication date:	27 April, 2004
Inventors:	Philipp Mikhailovich Kanarev; V.V. Podobedov; A.I. Tlishev.
Classification:	
- International:	C25B1/04; C25B9/06; (IPC1-7): C25B1/04; C25B9/06
- European:	Y02E60/36F
Application number:	RU20030117806 20030616
Priority number:	RU20030117806 20030616
Full Patent ENGLISH	http://russianpatents.com/patent/222/2227817.html

ABSTRACT

FIELD:

Physiochemical technologies for production of hydrogen and oxygen from water.

SUBSTANCE:

Proposed electrolytic cell has taper housing made from current-conducting material and used as cathode, additional taper electrodes and taper cover made from current-conducting material and used as anode. Cylindrical bases of housing, additional electrodes and cover have circular recesses for dielectric rings. Housing, additional electrodes and cover are connected by means of bolts inserted into holes in cylindrical bases. Insulation between anode, additional electrodes and cathode is insured by dielectric rings, dielectric washers and dielectric bushes. Solution is fed from reservoir to inter-electrode space through passage. Gases escape through branch pipe. Proposed cell may be used for polarization of ions of solution and water molecules in horizontal and vertical planes, thus forming positive potential on anode and negative potential on cathode before connecting the cell to electric circuit; process of separation of gases continues after disconnection of cell from circuit.

EFFECT:

Considerable reduction of power requirements for decomposition of water.

DRAWINGS:

See next page.

VITAL REPLICATION TIPS

I couldn't get a copy of the full Patent neither in Russian nor in English. According to www.rexresearch.com/kanarev/kanarev1.htm it was originally developed under military umbrella so maybe that's the reason. Rex Research stated that this tech ***has been replicated successfully***. Since the Patent abstract says specifically that it has one drawing, I assume the drawing below must be it – according to Kanarev's own articles.

Russian Patent
№ 2227817

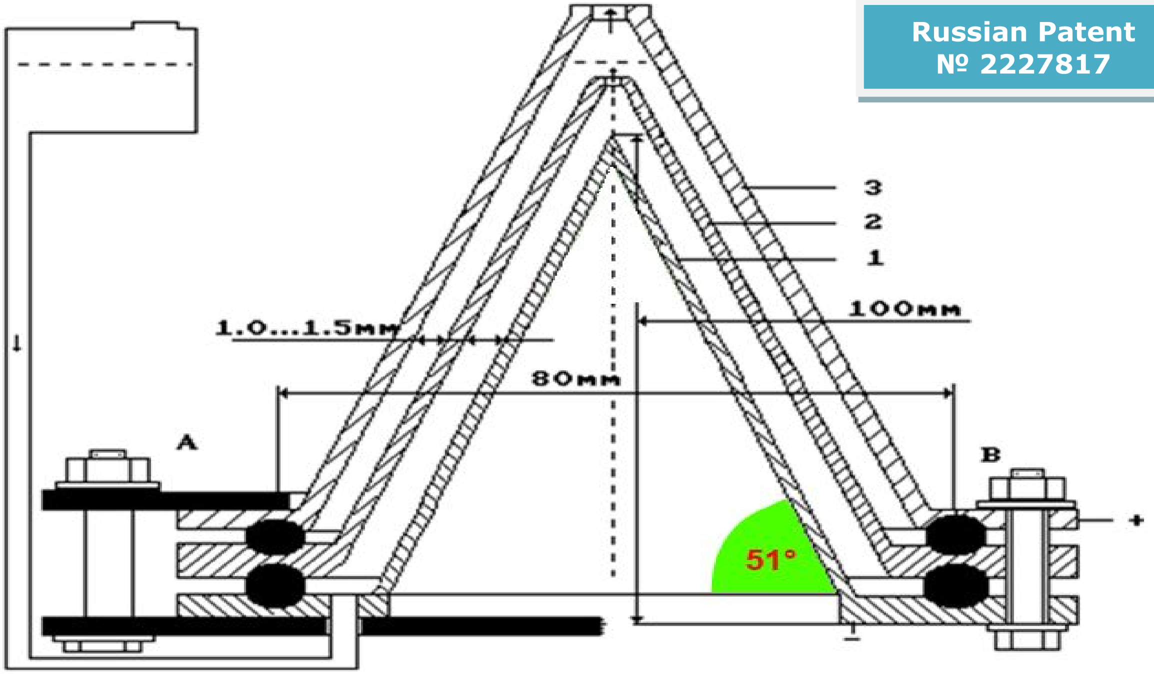

In the above drawing you can see some of the dimensions. However, it has come to my knowledge that the angle I marked in green is a critical measurement (missing from the Patent). One Waterfuel experimenter who replicated Kanarev's Patent in a number of experiments, was kind enough to share his findings. ***The missing, yet vital piece of information in the Patent was the precise ANGLE of the electrode structure.*** The experimenter found that the desired RESONANCE (rather than brute force electrolysis) only occurs if you set ***the slope angle*** at

51 degrees →→

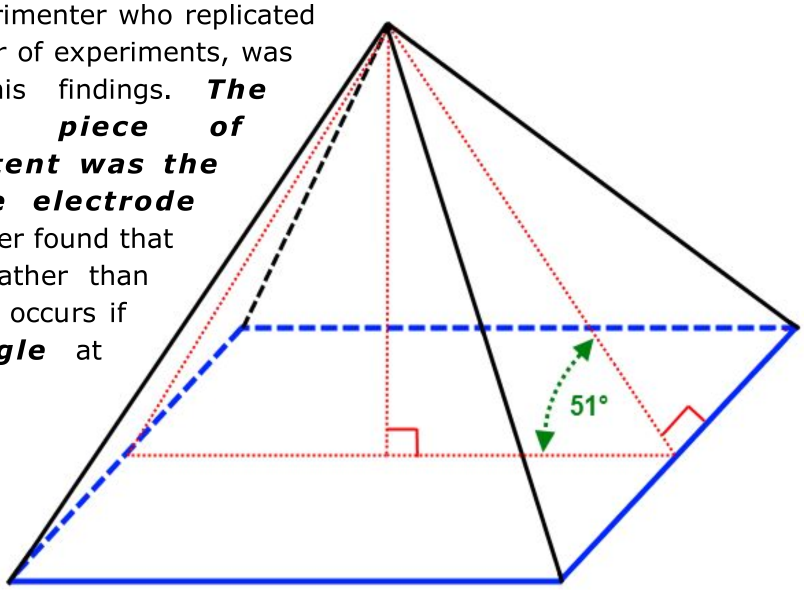

Is it a mere coincidence that this is also the slope angle of the Great Pyramid of Giza? Is this why "Area 51" is marked by this number? Well, it doesn't really matter – but you can use it as a nice reminder of this important angle. The drawing above shows you exactly which angle should be 51°. To be exact, in an optimal pyramid it calculates to 51.84° (some say 51.17°), but if you bring it to 51° then you should be close enough. Once you get positive results you can tweak it from there.

It's also important to know that the electrodes (parts 1, 2 and 3 in Kanarev's drawing) should be CONE SHAPED rather than square-based pyramids. You can experiment with square pyramids but the CORNERS are problematic: not only are they hard to produce but also **prone to faster corrosion.** How to create stainless steel cones? A machinist can help you with that.

Drawing not to scale. It shows how a cone layout may look like before bending. Measurements in this drawing are *approximate*, based on my own calculations **for 51.84° in red** and ***for 19.8° in yellow highlight***.

UNITS: experiment with X values as fractions of 1 meter, e.g. ½ meter, ¼ meter, and also fractions of 1 Royal Cubit (0.524 meter) as well as **complete** inches.

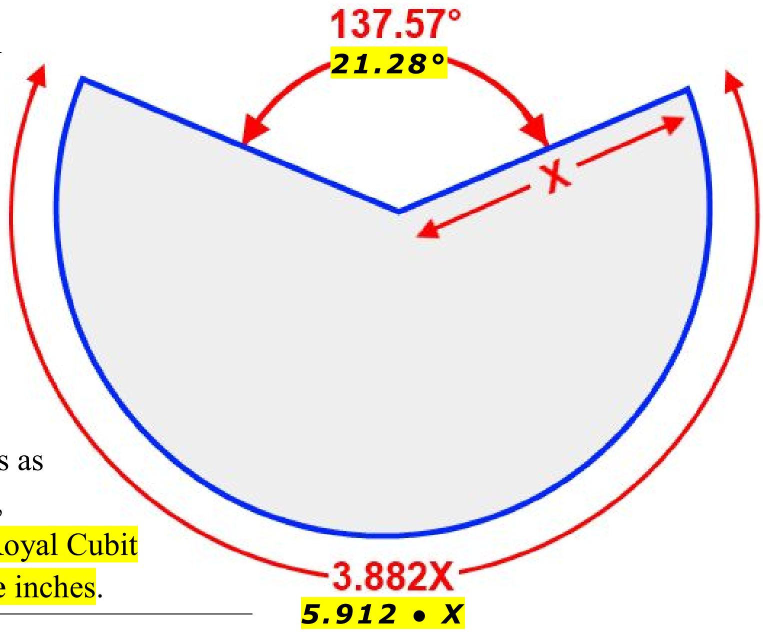

That experimenter also found out that ***if you made that angle 19.8° rather than 51° then it should create RESONANCE.*** This means that the process of electrolysis needs to be started, and then after a while (10 to 30 minutes???) it "catches on" and starts vibrating all by itself, needing little or no power to continue and produce HHO, much like Kanarev describes. Also see the ***low-angle*** conical electrodes on page 4 of Australian Patent AU-2005100722-A4 (see next page, the angles could be 19.8º or near). The stress point: ***it must be exactly 19.8°*** which requires special tooling, craftsmanship and patience.

At this time of writing, apart from the Patent itself of course (and good metal e.g. 316L), the only pieces of information I consider critical for replicating this invention are: the angles, the cone shape and the measurements given in the Patent drawing by Kanarev himself. Tweaking the structure may be required in order to get optimal results, but these tips may save you time and get you closer to optimum results.

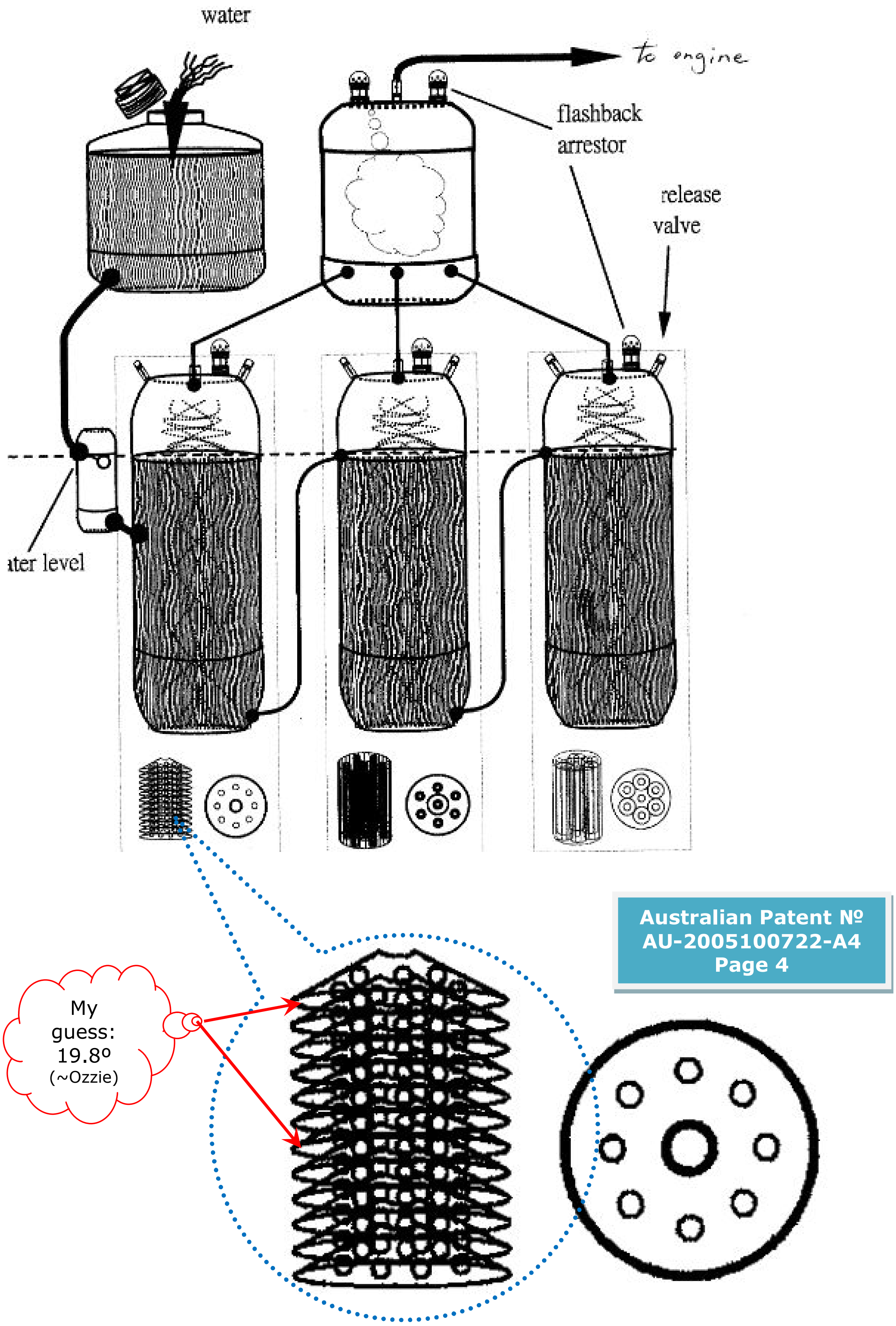

Australian Patent № AU-2005100722-A4 Page 4

My guess: 19.8º (~Ozzie)

One more replication tip: WATCH how the process should look like

One of the videos showing Kanarev's electrolysis is available for download at:
http://guns.connect.fi/innoplaza/energy/story/Kanarev/video/VIDEOELECTROLYS.wmv

Frankly, it is hard for me to tell which patent number exactly corresponds to this video. But if you watch it you may get another hint regarding Kanarev's Waterfuel invention. I believe it relates to Russian Patent № 2227817 by Philipp Mikhailovich Kanarev, V.V. Podobedov and A.I. Tlishev – or a prototype for a similar invention. You can see in the video that it's not your ordinary low-current electrolysis.

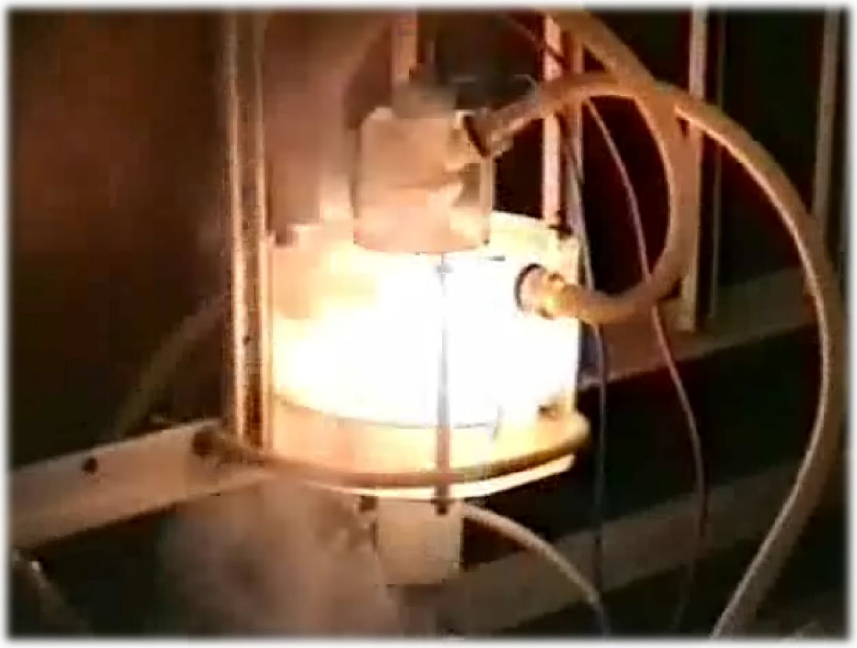

Image from mentioned video

NOTES:

- When you see the video you may get the same idea I did – that this is not normal electrolysis but type of "cold fusion" (Kanarev uses other terms – he says there is no real fusion here and explains in great detail; the references are all here, just study them closely). Relate this to Chapter 28 below.

- I obtained these replication tips from tests and independent analysis that have been performed without Kanarev's direct assistance, as well as my own research.

- This department of the technology (Kanarev's Patents and electrolysis theory appearing in this book, with the replication tips I've added) is regarded by some theorists to be "pseudoscience" because they only analyze it by known theory rather than actually building and testing the devices. I belong in the school of thought that says that theory gets us just so far, and the rest must be completed by experimentation.

Business Use of Patent Information

By The European Patent Office
(EPO – www.EPO.org)

Patent information is interesting not only because of its legal and technical relevance, but increasingly because of its importance in a business context. Patent information provides a wealth of information for many people involved in business, especially corporate decision makers, investors, managers and innovators working in research and development.

It can help you to:

- Monitor trends in technology which will influence your products,
- See which markets your competitors are active in,
- Identify business opportunities, and
- coordinate your business decisions.

Decision-makers are becoming increasingly interested in using patents to get an idea of the "big picture" and take informed decisions. Tools on the market can analyze large amounts of patent data and present the results in easily understandable graphics showing, for example:

- Increased patent activity in certain technical fields
- Areas in which your competitors' patents are clustered
- The geographical distribution of patents over time.

It is also important for a business to understand patent information in order to avoid the duplication of work — at the EPO, we estimate the cost of duplicate research to be 20 billion euro a year in Europe alone. This is a deficit that no company can afford to ignore.

What You Need to Know About The Validity and Workability of Patents (by Ozzie)

The word 'Patent' does not mean "mature technology ready to sell" although many of them describe such technologies. A Patent is simply a type of document that exposes an invention to the public – through Government channels. Therefore, the fact that an official paper exists on any subject does not necessarily mean that it is fully developed. However, it DOES mean that serious experts think that it can definitely be fully developed in a reasonable span of time, and become one more on-the-shelf reality.

I'm not sure what percentage of Patents have been written after the inventor has played with working models or even made a professional prototype, but it is certain that many of them have (sometimes the Government demands it). Behind many of the Waterfuel Patents that you've seen in this book are from inventors who have invested a lifetime of experimenting with physical models and even drove their vehicles across the land using their inventions.

Bottom line: "Patent = 100% Fact" is clearly a false statement,
while "Patent = A lot of Validity" is a very true statement.

And when you use any existing Patent or Patents as part of your research, your development and even if "only" as part of your line of thought, it is a valid tool for inspiration and direction. As stated above by The European Patent Office, proper use of Patents and Patent Applications can save you a lot of wasted money.

So use Patents wisely and ethically, in your business or in your private experimentation, and see how much value a piece of paper can give you, and what impact it can have on your future. And future generations.

Against Patents...

Back in 1990, electronics pioneer and inventor Don Lancaster published his thesis "The Case Against Patents" in which he speaks STRONGLY AGAINST PATENTING. I'm not supporting or opposing his thesis, but if you're an inventor or developer, it's always a good read so you can see the other side of patenting – and alternatives suggested by this savvy professional. Some of the points Don Lancaster makes against Patents in general (his statements, not mine):

- Big industry does NOT buy ideas or patents.
- Nobody voluntarily pays any patent royalties.
- Not one patent in one hundred will ever show any positive cash flow.
- Your patent does not in any manner prevent others from stealing or using your ideas.

Download the full document from Lancaster: http://www.tinaja.com/glib/casagpat.pdf

Patent Suppression "For National Security"

By Gary Vesperman (edited to fit this book)

During the 1950's, Phil Stone, a retired Florida college physics professor, had a patent for a device to run an engine on water. The U.S. Government then unfairly classified his patent, and this prevented him from developing his device.

But Phil Stone's story is only one of many.

The US Patent Office has classified 5000 patents, an unknown number of which relate to energy. Their helplessly shackled inventors will be jailed for 20 years if they work on, develop, make, sell, write about, or even simply talk about their inventions.

The most straightforward way to suppress development of new sources of energy and still maintain an appearance of legitimacy might be by controlling the US Patent Office.

Under the Invention Secrecy Act of 1951, the government may restrict the publication and dissemination of information about new inventions if their disclosure could be "detrimental to the national security." By the end of 2006 there were 4942 invention secrecy orders in effect. These "secretized" patents are kept in the vault at the US Patent Office (Park 5 Building). They never receive a patent number, and the inventor is rarely, if ever, compensated by the government for use of the invention.

The US Patent Office has a nine-member committee that screens patents in order to protect "national security". An understandable reason for suppressing certain types of energy inventions is that the knowledge behind them is also capable of producing tremendously destructive advanced weapons such as the "death ray".

A hidden purpose of this committee is to also find and remove from public access energy-related patents which could threaten the fossil fuel and power monopolies.

Canada's patent office doesn't have a similar screening committee. It is recommended that energy patents possibly in danger of being classified ***should be first applied for in Canada***. Once granted, up to one year is allowed to apply for the same patent in the US Patent Office. Now the patent cannot be classified because it is already out in the public domain, courtesy of Canada.

> ***Canada's Patent authority is called "Canadian Intellectual Property Office". Call it toll-free 1-866-997-1936, or visit www.ic.gc.ca/eic/site/cipointernet-internetopic.nsf/eng/home***

As a solution, Gary Vesperman in 2007 suggested that the newly-elected U.S. Congress create and pass a bill of law titled "Energy Inventor Protection and Patent Declassification Act". Included should be 24/7 protection of energy inventors and their property by armed guards, and declassification of as many as 5000 energy patents unfairly held in secret by the US Patent Office.

Furthermore, says Vesperman, Remy Chevalier[156] suggests that the U.S. Congress needs to put back into question the entire review process of patent law, and its consequences on environmental health, by imposing strict fines to whoever is caught buying energy patents for the sole purpose of keeping its protocol out of commercial circulation.

Phil Stone on "Opting-Out" of the Patent System

By Brian Wine www.byronwine.com (from a message Phil Stone sent him in Sep.2005)

> ***Nearly everyone working in the "free energy" field has had problems with the patent office. They seem to think that a rejected patent means they cannot produce the object covered by the rejected patent. SO, they think they cannot produce and sell a 200 MPG carburetor, or a fuel-free motor, or whatever. This logic is flawed.***
>
> ***Let me explain by example... IBM publishes "technical bulletins" that are really their failed patent applications. Those bulletins provide the proof of prior art and prevent litigation of products built on those failed patents. Once published, anywhere, but it works nicely for their size to produce a book, the idea is no longer patentable by anyone. The principle is this: publishing process establishes prior-art and thus the inventor, by publishing, "opts out" of the patent system completely. This protects the inventor from future litigation. No one can use future patents to "steal" prior-art.***
>
> ***The free energy folks that have been refused patent protection by the patent office are being forced to "opt-out" of the patent system. This may not be by choice, but it is a well known path. These inventors should be immediately publishing the equivalent, their own "technical bulletins" so they can produce their devices without fear of patent litigation over their own use of their inventions in the future. No patent can then be granted to anyone else over the item because of prior art.***
>
> ***This misunderstanding of the patent system from within the free-energy community, is as responsible for these items remaining off the market as failure to be granted a patent. The inventors themselves are doing this to themselves. The fundamental economic theory also shifts without patent protection, but there are still theories in support. (Primary what are called 'first movers advantages.') You should be clearly mentioning this on your list of problems related to these technologies, since it is as central as the inventions themselves.***
>
> ***-Phil***
> ***http://bibletime.com***

---

[156] Pro-environment activist (Green Party, Connecticut)

“Invention is the most important product of man’s creative brain. The ultimate purpose is the complete mastery of mind over the material world, the harnessing of human nature to human needs.”

— Nikola Tesla, from his book “My Inventions”

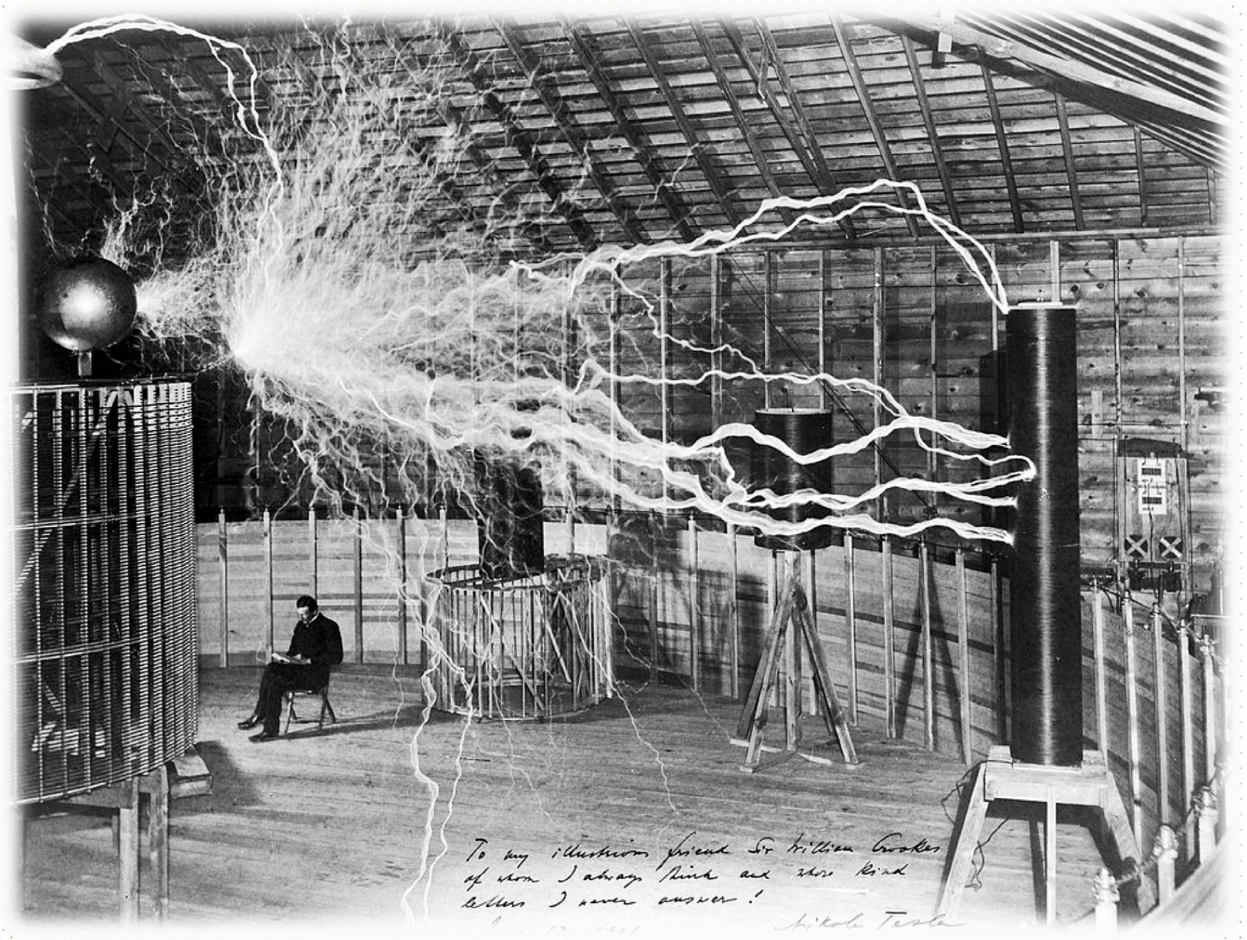

===== End of Volume-1. This book is continued in Volume-2 =====

Title: The GREEN SCIENCE of Waterfuel:
Free-Energy Secrets "THEY" Don't Want You to Know
VOLUME 2 of 2

Authors: Ozzie Freedom, George Wiseman, William Rhodes, Sir Anthony Griffin, Moray King, Chris Eckman, Andrija Puharich, P.M. Kanarev, R.M. Santilli, Viktor Schauberger, Tyler van Houwelingen, et al.

Edition: Fourth Edition, June 2017

ISBN:

Publisher: 1Freedom.com eBook Publishers

SHARE

This book is a non-profit educational project that supports Waterfuel and all Cleantech. If you wish to reprint this book (no cost, no royalties) please contact the Publisher for ready-to-print files, low-cost printers and free advice.

IMAGES: Unless otherwise noted, photos and artwork were shot or created by the author, or obtained from royalty-free resources: PublicDomainPictures.net, Clker.com, Wikimedia Commons, NASA, U.S. Patent Office and other public domain resources, or borrowed on a fair-use basis as this is a non-profit publication for educational and research purposes. Photos and illustrations attached to textual descriptions quoted from other authors belong to their respective authors although some have been edited to fit this publication.

TABLE OF CONTENTS

Chapter **Page**

VOLUME-1

VOLUME-2

Chapter 22. **Practical, Modern-Day Waterfuel Heater Patents**

Remember: **HEATING also with WATER CAVITATION per Chapter 16 above.**

Is Our World Warming? Or Cooling?

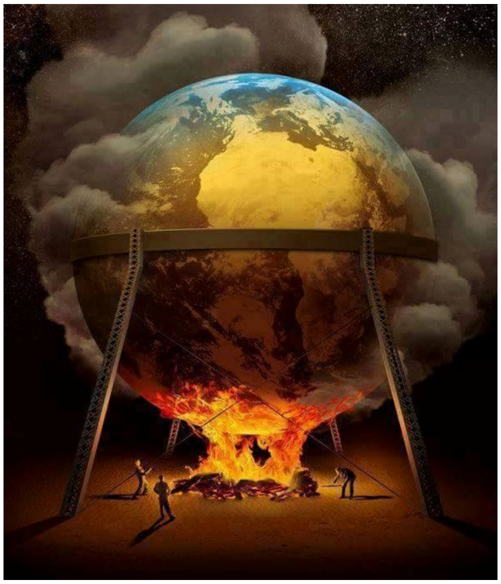

Art: Mena Kamil *Photo: Santiago Puig Vilado*

Some shout: "Global Warming!" while others shout back just as hard: "No way! It's Global Cooling!" … This debate can fill up a book of its own so let's not go there. However, in recent winters it has become clear that extreme weather conditions will be our lot for a while – including such harsh winters that few people remember. Billions of people need heating – CHEAP and SAFE heating – that does not make it hard to breathe and does not dry the air indoors. Heating your home and your office with Brown's Gas is the answer.

You may have seen the section in Chapter 21 about heaters, but here I'm going to show you two modern-day Waterfuel-heating inventions that are not only registered with the Patent office, but are also provided in great detail for your research and consideration. If you live here ← or any place where cheap and safe heating is desirable, then you should examine this chapter.

Photo: Denis Jacquerye (2005)

Waterfuel Room Heater Patents 2012+13

US 20100187321A1

(19) **United States**
(12) **Patent Application Publication**
Bunn et al.

(10) **Pub. No.: US 2010/0187321 A1**
(43) **Pub. Date: Jul. 29, 2010**

(54) **HOME HEATING SYSTEM UTILIZING ELECTROLYSIS OF WATER**

(76) Inventors: **Randy Morrell Bunn**, Caldwell, ID (US); **Mark Richard Akkerman**, Boise, ID (US)

Correspondence Address:
DYKAS, SHAVER & NIPPER, LLP
P.O. BOX 877
BOISE, ID 83701-0877 (US)

(21) Appl. No.: **12/695,876**

(22) Filed: **Jan. 28, 2010**

Related U.S. Application Data

(60) Provisional application No. 61/148,214, filed on Jan. 29, 2009.

Publication Classification

(51) **Int. Cl.**
F24D 5/00 (2006.01)

(52) **U.S. Cl.** .... **237/1 R**; 237/50

(57) **ABSTRACT**

Disclosed is a heating system utilizing electrolysis of water for heating a space. The system includes a tank configured to hold water, a separation cell configured to perform electrolysis of water, a first heat exchanger, a gas bubbler, a burn unit, and a second heat exchanger, where water from the tank is delivered to the separation cell where electrolysis is performed. The fluid produced from the electrolysis is delivered through the first heat exchanger back to the tank, then to the gas bubbler, and finally to the burn unit, where the hydrogen gas produced during electrolysis is burned to emit heat directed at the second heat exchanger. Through the process environment air is heated.

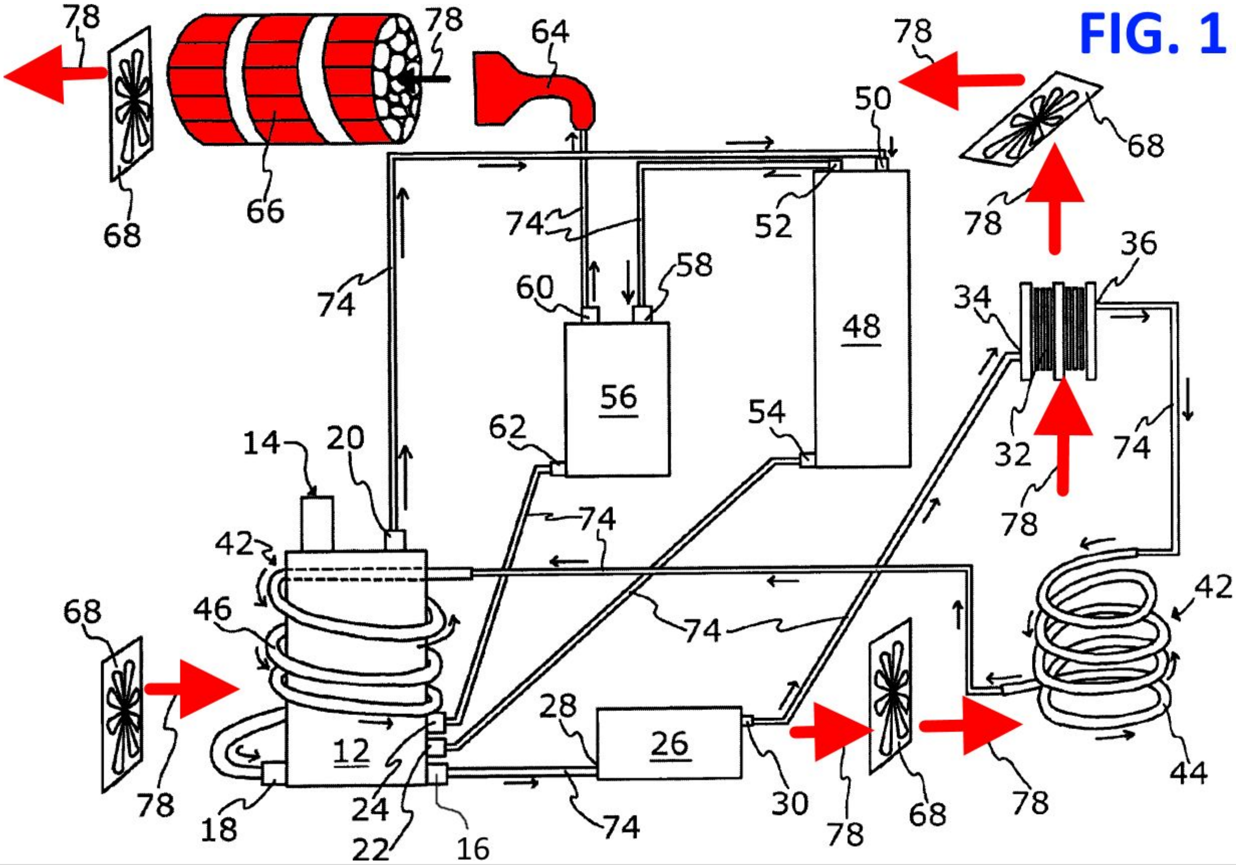

FIG. 1

FIELD OF THE INVENTION

The invention generally relates to a heating system, and more particularly to a heating system utilizing electrolysis of water.

BACKGROUND OF THE INVENTION

Many different fuels have been used as heating sources, including wood, coal, natural gas, propane, heating oil, methane, and animal excrement, to name a few. Typically, these fuels are burned to generate heat. However, these fuels are not always in ready and abundant supply. Further, the fuels readily available in one area are not necessarily readily available in other areas. For example, in some parts of the world, wood and coal are readily available while propane and natural gas are not. In these areas, a heating system designed to utilize propane or natural gas as a fuel source will not be terribly helpful. Further, even in the areas where propane and natural gas are available, the cost of such fuels can often be prohibitive. Still further, the availability of such fuels is often largely dependent upon a third party. When such third parties unilaterally decided to limit the supply of the fuel, the end-user suffers from increased prices due to high demand or the bitter cold of insufficient supply. Finally, many of these fuels, when burned, produce emissions that are not safe for prolonged human exposure and that worsen problems of pollution.

SUMMARY OF THE INVENTION

The present heating system provides an efficient heat source for a home or other space where the system utilizes water, which is generally widely and abundantly available, as a fuel source without producing dangerous emissions. The present heating system further provides a heating unit that captures the heat emitted by various components within the unit, rather than relying upon only the burning of the hydrogen gas produced from the electrolysis process. Further, certain embodiments of the present invention allow a user to utilize commonly-available parts to construct the unit. Thus, the manufacturing cost of the system is kept minimal and the technology is made available to a greater percentage of the public.

As described in more detail below, the heating system includes a tank in which water is stored. The water from the tank is passed to separation cells wherein electrolysis is performed. During electrolysis the hydrogen and oxygen comprising the water molecules are separated to form hydrogen gas and oxygen gas. The hydrogen gas, oxygen gas, and any non-separated water are passed through a first heat exchanger, wherein the fluid within is cooled and heat is emitted. After passing through the first heat exchanger, the fluid is returned to the tank where the hydrogen gas and oxygen gas gather at the top of the tank and exit to a gas bubbler. In the gas bubbler water vapor and steam that may have exited the tank remain within the gas bubbler fluid while the hydrogen and oxygen gas pass out of the gas bubbler to a condenser and then to a burn unit or pass out of the gas bubbler and then directly to a burn unit. The burn unit includes a flashback arrestor, an igniter, and a torch. After traveling through the flashback arrestor of the burn unit, the hydrogen gas is burned by the igniter and the torch flame resulting therefrom is directed to a second heat exchanger. The heat from the first heat exchanger, the separation cells, and burn unit are pushed through the system and out into the space to be heated by a series of fans. Other heat emitted by devices within the system is also gathered by the air flow directed by the series of fans. As such, the heating system utilizes relatively little energy to perform electrolysis of water and generates a relatively large amount of heat for the amount of energy used. Further, the emissions from the system are essentially only hydrogen gas, oxygen gas, and steam, i.e., non-toxic and non-harmful gases.

The purpose of the Summary is to enable the public, and especially the scientists, engineers, and practitioners in the art who are not familiar with patent or legal terms or phraseology to determine quickly, from a cursory inspection, the nature and essence of the technical disclosure of the application. The Summary is neither intended to define the invention of the application, which is measured by the claims, nor is it intended to be limiting as to the scope of the invention in any way.

Still other features and advantages of the claimed system will become readily apparent to those skilled in the art from the following detailed description describing preferred embodiments of the system, simply by way of illustration of the best mode contemplated by carrying out the system. As will be realized, the system is capable of modification in various obvious respects all without departing from the invention. Accordingly, the drawings and description of the preferred embodiments are to be regarded as illustrative, and not restrictive.

BRIEF DESCRIPTION OF THE DRAWINGS

FIG. 1 is a partial diagram of a heating system according to a first embodiment.

FIG. 2 is a partial diagram of a heating system according to a second embodiment.

FIG. 3 is an isometric, perspective view of the right side and top of a heating system according to the first embodiment, with the right side and part of the top of the exterior case removed for ease of viewing the interior.

FIG. 4 is an isometric, perspective view of the front and top of a heating system according to the first embodiment.

FIG. 5 is an isometric view of the back, right side, and top of an internal case of a heating system according to the first embodiment.

FIG. 6 is an isometric view of the front and top of a tank of a heating system according to the first embodiment.

FIG. 7 is a partial, isometric, perspective view of the back and top of a heating system according to the first embodiment.

FIG. 8 is a top view of a first heat exchanger of a heating system according to the second embodiment.

FIG. 9 is an isometric, perspective view of the front and top of a gas bubbler of a heating system according to the first embodiment.

FIG. 10 is a front, elevation view of a gas bubbler of a heating system according to the second embodiment.

FIG. 11 is an exploded view of a flashback arrestor of a burn unit of a heating system according to the second embodiment.

FIG. 12 is a top view of a second heat exchanger of a heating system according to the first embodiment and the second embodiment.

FIG. 13 is a side elevation view of a second heat exchanger of a heating system according to the first embodiment and the second embodiment.

FIG. 14 is an exploded view of an upper rear fan subsystem of a heating system according to the first embodiment.

FIG. 15 is a diagram of a heating system incorporated within a home furnace system.

DESCRIPTION OF THE PREFERRED EMBODIMENTS

While the system is susceptible of various modifications and alternative constructions, certain illustrated embodiments thereof have been shown in the drawings and will be described below in detail. It should be understood, however, that there is no intention to limit the system to the specific form disclosed. On the contrary, the system is to cover all modifications, alternative constructions, and equivalents falling within the spirit and scope of the invention as defined in the claims.

In the following description and in the figures, like elements are identified with like reference numerals. The use of "e.g.," "etc.," and "or" indicates non-exclusive alternatives without limitation unless otherwise noted. The use of "including" means "including, but not limited to," unless otherwise noted.

As shown in the FIGS. 1 through 15, disclosed is a heating system **10** utilizing electrolysis of water for heating a space. According to the depicted embodiments, the heating system **10** is contained within an external case **72**. The external case **72** preferably comprises a box-shaped housing made up of a front external side, a right external side, a left external side, a back external side, a bottom external side, and a top external side. The external case **72** houses an internal case **70** that divides the interior of the external case **72** into two sections. The internal case **70**, which has an interior surface and an exterior surface, preferably comprises a box-shaped housing made up of a front internal side, a right internal side, a left internal side, a back internal side, a bottom internal side, and a top internal side. The bottom internal side rests atop the bottom external side. The front external side of the external case **72** has a fan **68** attached in a lower area, i.e., a lower front fan **68**. The front internal side defines a front fan opening **92**. As arranged within the external case **72**, the front fan opening **92** aligns with the fan **68** in the lower front area of the front external side. Accordingly, the front fan opening **92** is configured to encourage environmental air from the space to be heated to enter the external case **72** and the internal case **70** from the space.

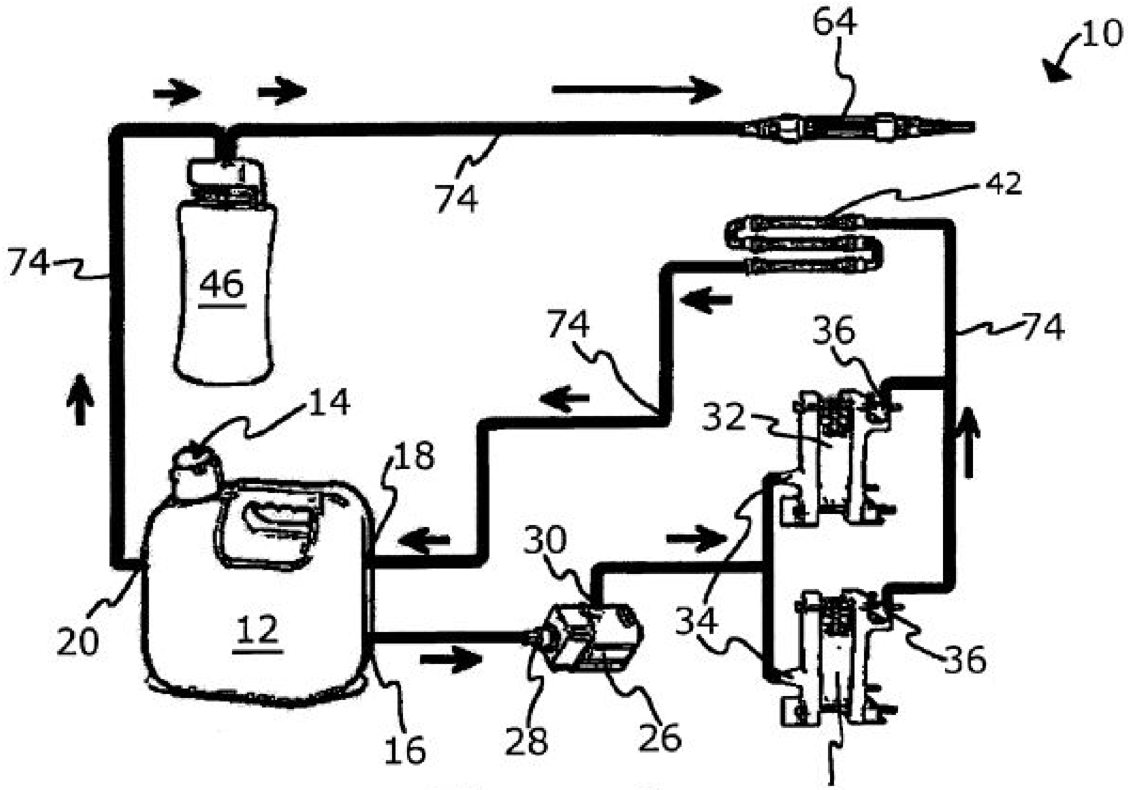

Figure 2

As shown in FIG. 3, the heating system **10** also includes a tank **12** located mostly within the internal case **70**. The tank **12** is configured to hold water **96** and gases, specifically hydrogen and oxygen gases. Preferably, the tank **12** is configured to hold such gases under pressure. Further, preferably, the tank **12** includes an electrolyte such that the water **96** and electrolyte form a water-electrolyte mixture. The electrolyte is preferably a compound configured to enhance the conductivity of water when the electrolyte is mixed therewith. Preferably, the electrolyte is a compound that is prone to disassociate into cations[157] that are of a greater standard electrode potential than a hydrogen ion and into anions that are of a lower standard electrode potential than hydroxide. In some embodiments the electrolyte includes potassium hydroxide. In other embodiments, the electrolyte includes sodium hydroxide. In still other embodiments, the water-electrolyte mixture further includes an anti-foaming agent. In one such embodiment, the water-electrolyte mixture includes potassium carbonate as the electrolyte along with an anti-foaming agent, such as polydimethylsiloxane, silicone oil, vegetable oil, or another known, non-toxic, anti-foaming agent.

---

[157] In electrolysis, a cation is an ion (or group of ions) that are positively charges and tens to move toward the Cathode – the negative electrode.

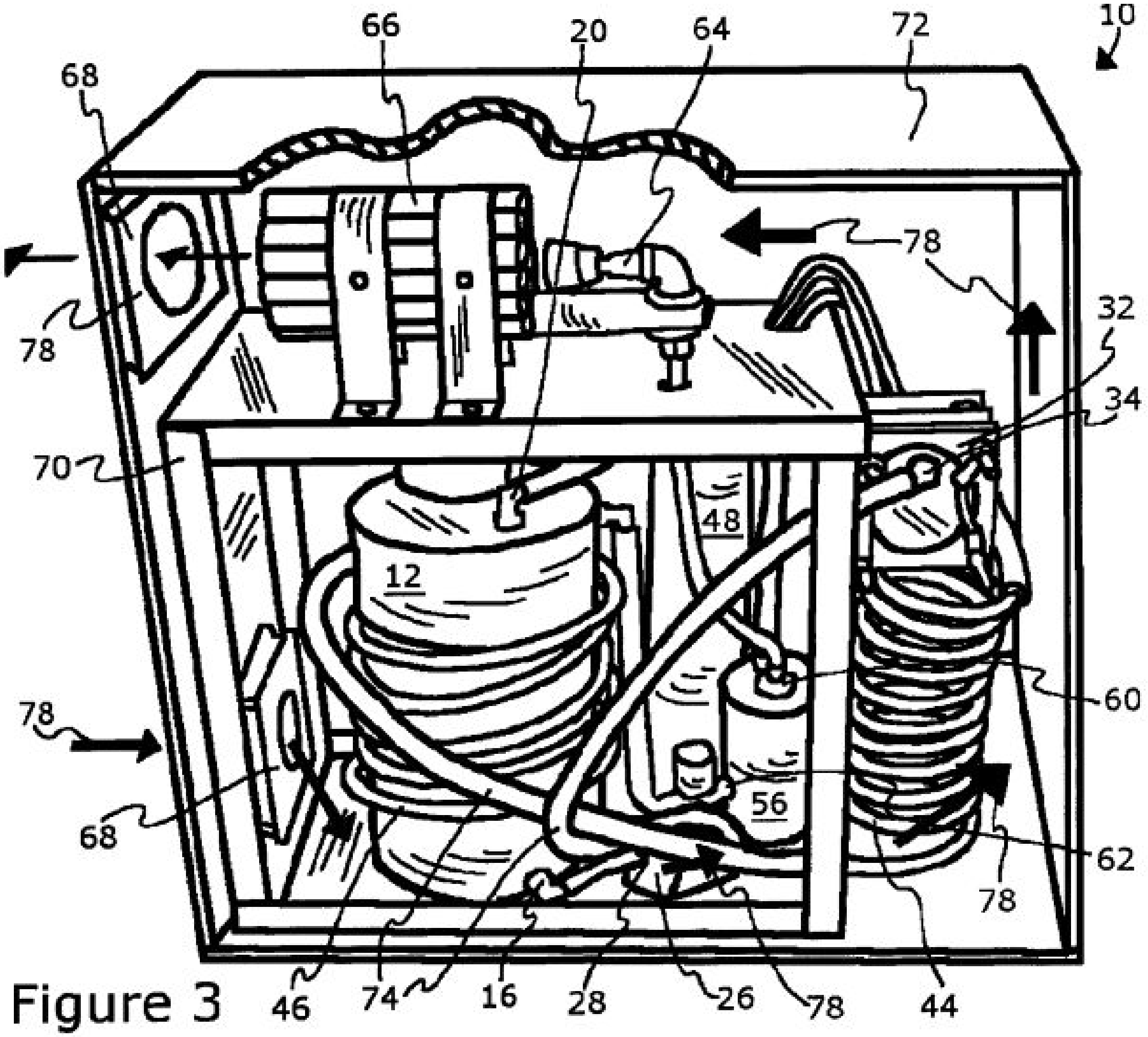

Figure 3

The tank **12** defines a tank refill port **14** in the upper area of the tank **12**. The tank refill port **14** is covered by a selectively-removable cap, which, when removed enables a user to refill the tank **12** via the tank refill port **14** with additional water **96**, electrolyte, or anti-foaming agent. Preferably, the tank refill port **14** aligns with a tank port opening **84** defined in the top internal side of the internal case **70**. The tank refill port **14** of the tank **12** extends out of the internal case **70** through the tank port opening **84**. As such, the tank refill port **14** is accessible outside of the internal case **70** and readily accessible when the external case **72** is removed.

Also located within the internal case **70** is a pump **26** that has a pump inlet **28** and a pump outlet **30**. The pump **26** is powered by a power source. The pump inlet **28** is operatively connected to a first tank outlet **16** defined in the tank **12** via a first conduit **74**. The first tank outlet **16** is preferably defined in a lower region of the tank **12**, below the level of the water **96** or water-electrolyte mixture within the tank **12**. The first conduit **74** is configured to pass the water **96** or water-electrolyte mixture between the tank **12** and the pump **26** via the first tank outlet **16** and the pump inlet **28**.

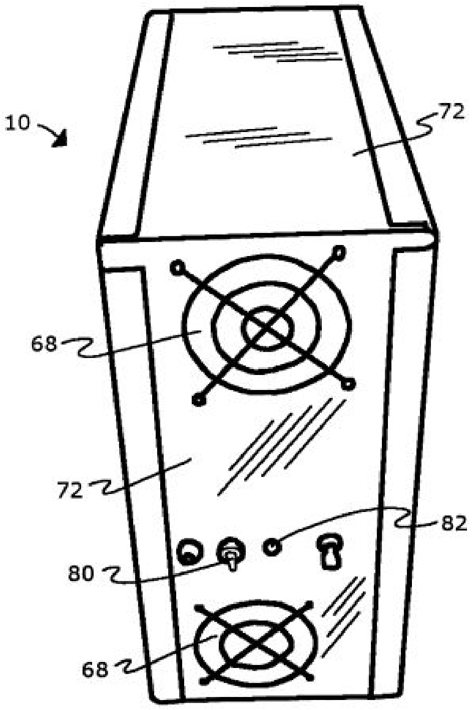

Figure 4

Preferably, the first conduit **74** is insulated along its length so that the temperature of the water **96** or water-electrolyte mixture within the conduit **74** is not excessively heated by the air within the internal case **70** as it flows between the tank **12** and the pump **26.**

Attached to the pump outlet **30** is a second conduit **74**, which, according to the first depicted embodiment, passes outside of the internal case **70** via a back conduit opening **90** defined in the back internal side (FIG. 5). Preferably the second conduit **74** is insulated along its length by being covered with insulation **76** (FIG. 7). The second conduit **74** is also configured to pass the water or water-electrolyte mixture from the pump **26.**

The second conduit **74** is operatively connected to and is configured to pass the water or water-electrolyte mixture to the cell inlet **34** of a separation cell **32** located outside of the internal case **70** and mounted to the exterior surface of the internal case **70.** Preferably, and according to the depicted embodiments, a plurality of separation cells **32** are so mounted. For example, in the first depicted embodiment, shown in FIGS. 1, **3**, and **7**, the heating system **10** includes two separation cells **32** operatively connected to one another in series. As another example, in the second depicted embodiment, shown in FIG. 2, the heating system **10** includes two separation cells **32** operatively connected to one another in parallel. In the second depicted embodiment, the two separation cells **32** are operatively connected to one another via a number of conduits **74.**

While it is preferred that the water-electrolyte mixture pass from the tank **12** to the separation cells **32** via the use of a pump **26**, in other embodiments, no pump **26** is used, such that the tank **12** will be more directly operatively connected to the separation cells **32**, such as by one conduit **74** extending between the first tank outlet **16** and the cell inlet **34**.

In some embodiments, the separation cells **32** are incorporated with a pump **26** as a single unit, such that no separate pump **26** is necessary. In such embodiments, the pump **26**, being contained within the separation cells **32**, will be located outside the internal case **70.** In still other embodiments, multiple pumps **26** are utilized or other devices are included along the flow between the first tank outlet **16** and cell inlet **34.**

Figure 6

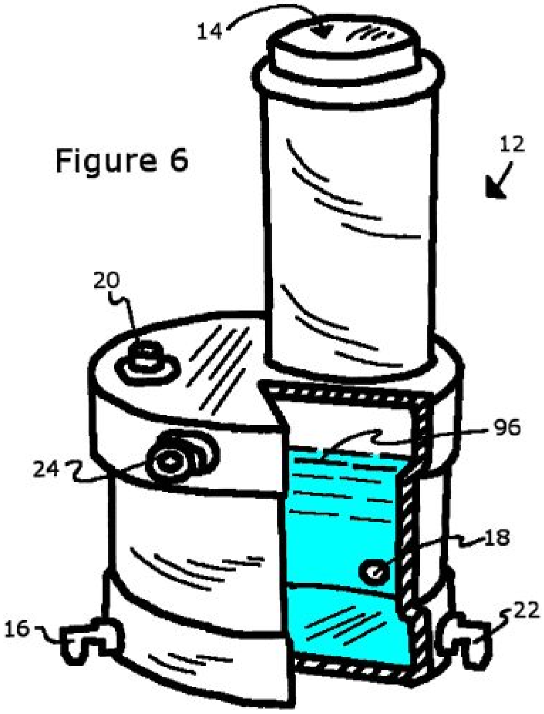

In any regard, the water-electrolyte mixture exiting the tank **12** via the first tank outlet **16** is transported to the separation cells **32**.

Each of the separation cells **32** contains a series of negatively-charged plates and positively-charged plates accordingly to known separation cell **32** designs. In some such designs, neutrally-charged, or non-charged, plates are also included in the series of positive and negative plates. In some embodiments, the plates within the separation cells **32** are made of stainless steel. In other embodiments, the plates are made of platinum. In any regard, the separation cells **32** are configured to perform electrolysis of water, preferably in the presence of an electrolyte. The size and number of plates included in each separation cell **32** is chosen depending on the amount of hydrogen and oxygen that is desired to be produced. That is, the larger the space to the heated, the greater the amount of hydrogen production will be desired, and the larger the surface area of the separation plates will likely be wanted.

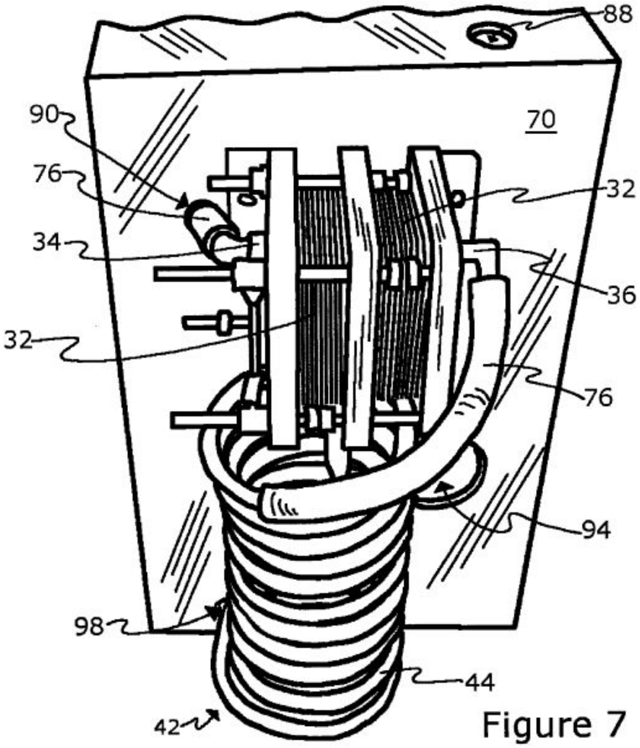

Figure 7

The separation cells **32** receive the water or water-electrolyte mixture via the second conduit **74**, perform electrolysis of the water **96** in the mixture in the presence of the electrolyte in the mixture, and produce a cell outlet mixture containing hydrogen gas and oxygen gas. Absent a completely efficient electrolysis performance, the separation cells **32** will also produce water vapor. The electrolyte and other components of the water-electrolyte mixture, such as the anti-foaming agent, if used, will also be included in the cell outlet mixture. According to the first embodiment, the cell outlet mixture will be the mixture exiting the second of the two separation cells **32** in series. According to the second embodiment, the cell outlet mixture will be the combination of the mixtures exiting each of the two separation cells **32** in parallel. In either regard, the cell outlet mixture exits the separation cells **32** via a cell outlet **36** (FIG. 7). The electrolysis process emits heat; thus, the cell outlet mixture exiting the separation cells **32** will tend to be hotter than the water or water-electrolyte mixture that entered the separation cells **32**.

Connected to the cell outlet **36** is a first heat exchanger **42**. In some embodiments, another conduit **74** operatively connects the cell outlet **36** to the first heat exchanger **42**. According to the first embodiment, the first heat exchanger **42** includes a primary segment **44** and a secondary segment **46** (FIG. 1). According to the second embodiment, the first heat exchanger **42** includes a plurality of tubes connected to one another in series in an S-configuration (FIG. 8). In other embodiments, the first heat exchanger **42** uses different conventional designs of simple heat exchangers. Also, according to the first embodiment, the primary segment **44** of the first heat exchanger **42** is covered with insulation **76** as it immediately exits the separation cells **32** via the cell outlet **36**. In other embodiments, the primary segment **44** is not insulated.

Figure 8

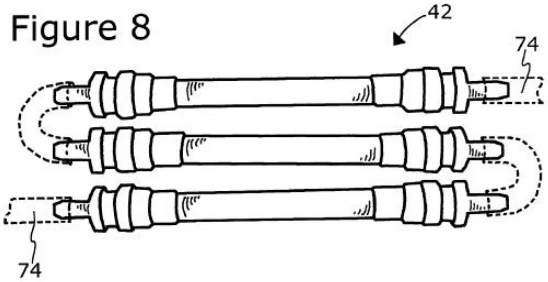

The first heat exchanger **42** is configured to pass the cell outlet mixture between the separation cells **32** and the tank **12**, where the first heat exchanger **42** is connected to the tank **12** at a first tank inlet **18** defined in the tank **12** wall. According to the first depicted embodiment, the first tank inlet **18** is defined in a lower part of the tank **12**, below the level of the water **96** or water-electrolyte mixture within the tank **12**. According to the second depicted embodiment, the first tank inlet **18** is defined in an upper part of the tank **12**, above the level of the water **96** or water-electrolyte mixture within the tank **12**.

As shown in FIG. 7, the primary segment **44** of the first heat exchanger **42** is preferably located outside of the internal case **70** and is arranged in a coil configuration. The primary segment **44** is configured to accommodate cooling of the cell outlet mixture as it passes through the primary segment **44** from the separation cells **32**. That is, as the cell outlet mixture travels through the primary segment **44**, heat from the cell outlet mixture will be emitted to environmental air. In other embodiments, the cell outlet **36** of the separation cells **32** is connected with the primary segment **44** of the first heat exchanger **42** via another conduit **74** (as shown in FIG. 1).

After traveling through the primary segment **44**, the cell outlet mixture will pass into a third conduit **74**, which is connected to the primary segment **44** of the first heat exchanger **42**. The third conduit **74** passes from outside the internal case **70** to inside the internal case **70** via a back heat exchanger opening **98** defined in the back internal side of the internal case **70**. Preferably, the back heat exchanger opening **98** is defined in a lower area of the back internal side of the internal case **70**. Thus, the third conduit **74** is configured to carry the cell outlet mixture that exits the primary segment **44** of the first heat exchanger **42** into the internal case **70** and to the secondary segment **46** of the first heat exchanger **42**, the secondary segment **46** being connected to the third conduit **74.**

Though the first depicted embodiment connects the primary segment **44** and secondary segment **46** of the first heat exchanger **42** via a conduit **74**, in other embodiments, the primary segment **44** and first heat exchanger **42** are seamlessly joined.

The secondary segment **46** of the first heat exchanger **42** receives the cell outlet mixture from the third conduit **74** and eventually deposits it into the tank **12** via a first tank inlet **18** defined in the tank **12** wall. Preferably, the first tank inlet **18** is defined in a lower area of the tank **12** wall, below the water **96** or water-electrolyte level line. The secondary segment **46**, located inside the internal case **70**, is arranged so as to encircle the tank **12** a number of times, preferably winding a number of times around the tank **12**, winding from the top of the tank **12** to the bottom of the tank **12** where the secondary segment **46** connects with the first tank inlet **18.** Thus, the secondary segment **46** is configured to pass the cell outlet mixture from the third conduit **74** to the tank **12** via the first tank inlet **18.** It is expected that the water-electrolyte mixture within the tank **12** will generally be cooler than the cell outlet mixture passing through the secondary segment **46**. As such, the secondary segment **46**, wound round the tank **12**, is configured to accommodate further cooling of the cell outlet mixture, whereby additional heat is emitted from the secondary segment **46**.

When the cell outlet mixture is returned to the tank **12**, water vapor, electrolyte, and anti-foaming agent from the cell outlet mixture will tend to re-mix with the water-electrolyte mixture in the tank **12**. The hydrogen gas and oxygen gas from the cell outlet mixture will tend to bubble up through the water-electrolyte mixture within the tank **12** to gather near the top of the tank **12**. The hydrogen gas and oxygen gas will then be available to exit the tank **12** via a second tank outlet **20** defined in an upper area of the tank **12** wall. A fourth conduit **74** is operationally connected to the second tank outlet **20** and is configured to pass the hydrogen gas and oxygen gas from the tank **12**. Water vapor or steam that has accumulated in the same area will also pass out of the second tank outlet **20** via the fourth conduit **74**.

The heating system **10** further includes a gas bubbler **48** preferably located within the internal case **70**. The gas bubbler **48** contains a gas bubbler fluid, which is preferably water **96**. The gas bubbler **48** defines a gas bubbler inlet **50** and a gas bubbler outlet **52** in an upper area of the gas bubbler **48**, as shown in FIGS. 9 and 10. The gas bubbler inlet **50** extends down below the level of the gas bubbler fluid. Thus, according to the depicted embodiments, the gas bubbler inlet **50** extends below the level of the water **96** within the gas bubbler **48**. Because the gas bubbler inlet **50** extends down into the gas bubbler fluid, the hydrogen gas and oxygen gas that are passed from the tank **12** via the fourth conduit **74** will tend to bubble **100** up through the gas bubbler fluid to gather in an upper area of the gas bubbler **48**. Preferably, the amount of gas bubbler fluid contained within the gas bubbler **48** is maintained at an amount to keep the level of the gas bubbler fluid at a level low enough to allow gas to gather in an upper area of the gas bubbler **48** but high enough to keep the gas bubbler inlet **50** extending to a submerged locale.

During operation, water vapor or steam that has passed from the tank **12** into the gas bubbler **48** will be able to mix with the gas bubbler fluid and remain within the gas bubbler **48**. The gas bubbler outlet **52**, which does not extend down below the level of the gas bubbler fluid, accommodates the exit of a gas bubbler mixture, which gas bubbler mixture will include the bubbled-up gases, particularly the hydrogen gas and oxygen gas, and, in some circumstances gas bubbler fluid vapors and/or steam.

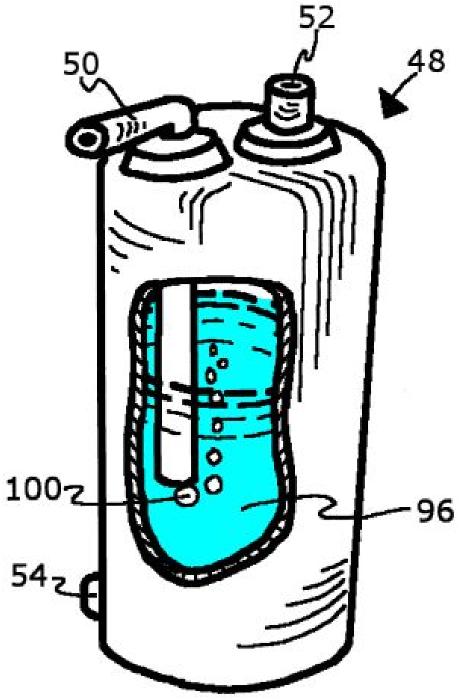

Figure 9

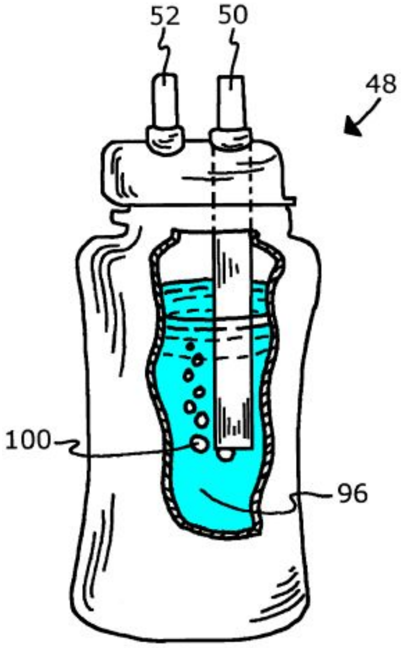

Figure 10

According to the second depicted embodiment, shown in FIG. 10, the gas bubbler **48** is constructed from a readily-available water container, in which the gas bubbler inlet **50** and gas bubbler outlet **52** are defined in the lid of the water container. In some embodiments, such water container is a drinking water container.

According to the first depicted embodiment, however, shown in FIG. 9, the gas bubbler **48** is a custom-designed container with a reservoir within. A fifth conduit **74** is connected to the gas bubbler outlet **52**. This fifth conduit **74** is configured to pass therethrough the gas bubbler mixture that exits the gas bubbler **48** via the gas bubbler outlet **52**.

As shown in FIG. 1, the fifth conduit **74** of the first depicted embodiment passes to a condenser **56** via a condenser inlet **58** defined in an upper area of the condenser **56**. Thus, the fifth conduit **74** carries the gas bubbler mixture from the gas bubbler **48** to the condenser **56**. The condenser **56**, preferably located within the internal case **70**, is configured to further cool the gas bubbler mixture such that the gas bubbler fluid, water vapor, or steam within the gas bubbler mixture will tend to condense and form a gas bubbler fluid condensate or water condensate, as the case may be. As such, the condenser **56** is further configured to prevent water from traveling out of the condenser outlet **60**. The remaining hydrogen gas and oxygen gas will not form a condensate, but will pass out of the condenser **56** via a condenser outlet **60** defined in the condenser **56**, preferably in an upper area. These gases will pass out of the condenser outlet **60** through a sixth conduit **74** connected thereto and configured to pass the hydrogen gas and oxygen gas therethrough away from the condenser **56**, outside of the internal case **70** via a flashback arrestor opening **86** (FIG. 5) defined in the upper internal side, and to a burn unit **64** that is operatively connected to the sixth conduit **74**. The burn unit **64** is situated outside of the internal case **70** and is directed toward the front external side.

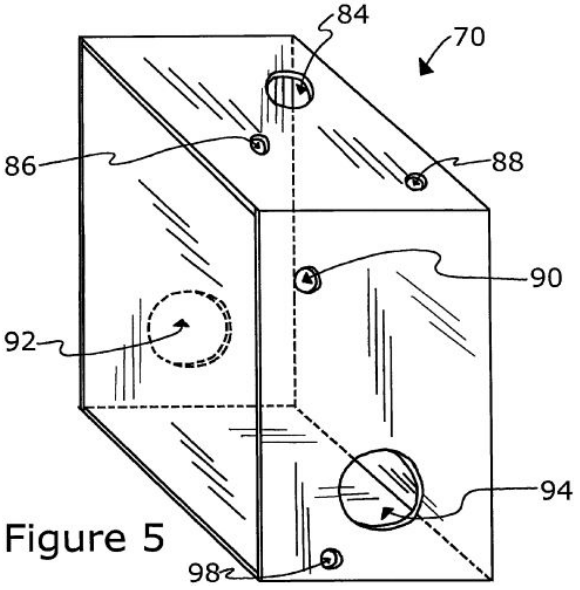

Figure 5

Though in the first depicted embodiment, the gas bubbler mixture is passed through a condenser **56** before the hydrogen gas and oxygen gas are passed to the burn unit **64**, according to the second depicted embodiment, a conduit **74** carries the gas bubbler mixture with the hydrogen gas and oxygen gas from the gas bubbler outlet **52** of the gas bubbler **48** direct to the burn unit **64**, as shown in

FIG. 2. This conduit **74** is preferably angled and configured to prevent water or other liquid from making an upward siphon back to the burn unit **64**.

The burn unit **64** includes a flashback arrestor connected to an igniter, which is configured to light a torch. The igniter portion of the burn unit **64** is configured to burn, as the torch flame, the hydrogen gas passing into the igniter portion from the flashback arrestor portion of the burn unit **64**. The flashback arrestor portion of the burn unit **64** is configured to prevent the igniter portion from burning the hydrogen gas contained within the sixth conduit **74** that connects to the burn unit **64**. According to the embodiment depicted in FIG. 11, the flashback arrestor portion of the burn unit **64** includes a flashback arrestor narrow fitting **104** connected to a flashback arrestor wide fitting **106**, which is joined with a flashback arrestor tube **110** on a proximate end. In some embodiments, the flashback arrestor narrow fittings **104** are barb fittings. The flashback arrestor tube **110** is joined with another flashback arrestor wide fitting **106** on the opposite, distal end. This second flashback arrestor wide fitting **106** is connected with a flashback arrestor narrow fitting **104** that is tipped with a flashback arrestor tip **102**.

The torch flame is produced at the flashback arrestor tip **102**. In some embodiments, the flashback arrestor tip **102** is a chuck fitting that is tapped for a 0.025 MIG tip and the flashback arrestor wide fittings **106** are quarter inch pipe fittings. The flashback arrestor tip **102** includes an orifice configured to reduce the exiting gas stream to a size conducive for forming the torch flame. Between the two flashback arrestor wide fittings **106** are mesh screens **108** configured to discourage the flame from passing therethrough to ignite hydrogen gas contained on the other side. In some embodiments, the flashback arrestor tube **110** comprises a copper tube and the mesh screens **108** comprise bronze wool. In other embodiments, the flashback arrestor tube **110** is filled with the mesh, rather than just being bordered by mesh screens **108**. According to the first depicted embodiment, the burn unit **64** is arranged in a bent shape, as shown in FIG. 3. According to the second depicted embodiment, the burn unit **64** is arranged in a straight shape, as shown in FIG. 2. In other embodiments, the flashback arrestor of the burn unit **64** is designed according to other known methods.

Should the hydrogen gas contained within the sixth conduit **74** become ignited, though unintentional, the gas bubbler fluid within the gas bubbler **48** will also serve as a flashback arrestor, a wet flashback arrestor. Accordingly, the gas bubbler fluid within the gas bubbler **48** is preferably a noncombustible substance, such as water.

Because the burn unit **64** is directed toward the front external side of the external case **72**, the heat generated from the burning of the hydrogen gas will also be directed toward the front external side of the external case **72**. Located between the burn unit **64** and the surface of the front external side of the external case **72** is a second heat exchanger **66** (FIGS. 12 and 13). The second heat exchanger **66** preferably includes a plurality of second heat exchanger tubes **116** bound together in a bundle, in close proximity with one another, preferably coming into contact with a number of other second heat exchanger tubes **116**. The bundle is attached via case mounting brackets **114** to the exterior surface of the internal case **70**. In some embodiments, the second heat exchanger tubes **116** comprise pipes made of copper, aluminum, or other conductive material.

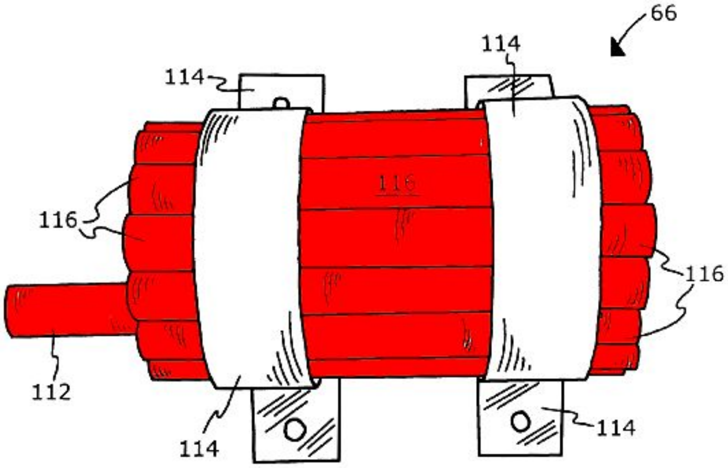

Figure 12

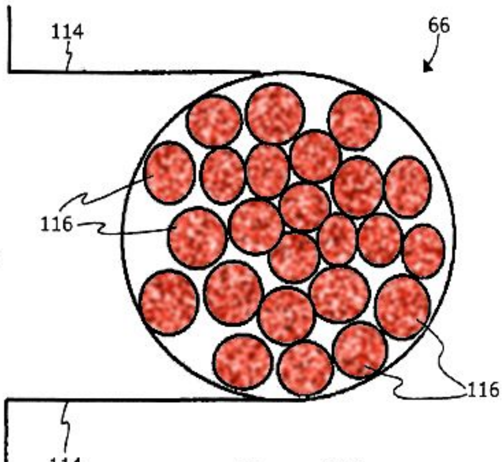

Figure 13

In some embodiments, the second heat exchanger **66** further includes at least one extended tube **112** toward which the burn unit **64** is specifically pointed. Preferably, in such embodiments, the flame from the torch of the igniter within the burn unit **64** is enters the extended tube **112** of the second heat exchanger **66.** As such the torch flame directly heats the extended tube **112** and then the heat is dissipated through the remainder of the second heat exchanger tubes **116.** In other embodiments, the second heat exchanger **66** includes second heat exchanger tubes **116** of all equal lengths. The second heat exchanger **66** is configured such that the heat emitted by the burn unit **64** heats the environmental air within and surrounding the second heat exchanger **66** before the heated air exits the side of the second heat exchanger **66** nearest to the front external side of the external case **72**.

Opposite the exiting side of the second heat exchanger **66**, an fan **68** is mounted within the front external side of the external case **72.** This upper front fan **68** is aligned with the second heat exchanger **66** and is configured to encourage heat emitted from the second heat exchanger **66** to exit the external case **72** and enter the space outside the heating system **10**, i.e., the space the heating system **10** is to heat.

Another fan **68** is preferably mounted within a back fan opening **94** (FIG. 5) defined in the back internal side of the internal case **70.** This rear fan **68** is configured to encourage environmental air to pass from inside the internal case **70** to outside the internal case **70**, while still being within the external case **72.** Thus, the rear fan **68** encourages environmental air to flow past the primary segment **44** of the first heat exchanger **42.**

Preferably, a fourth fan **68** is positioned above the separation cells **32** and is configured to direct heat emitted from the separation cells **32** toward the upper front fan **68.** As such, this upper rear fan **68** (shown in FIG. 1) is located outside of the internal case **70**, but inside the external case **72.** In some embodiments, the upper rear fan **68** is mounted to the interior surface of the external case **72.** In other embodiments, the upper rear fan **68** is mounted to the exterior surface of the internal case **70.**

As shown in the embodiment depicted in FIG. 14, the upper rear fan **68** comprises a duct fan subsystem **118**, which includes a heating system **10** situated above the separation cells **32** and directed upward.

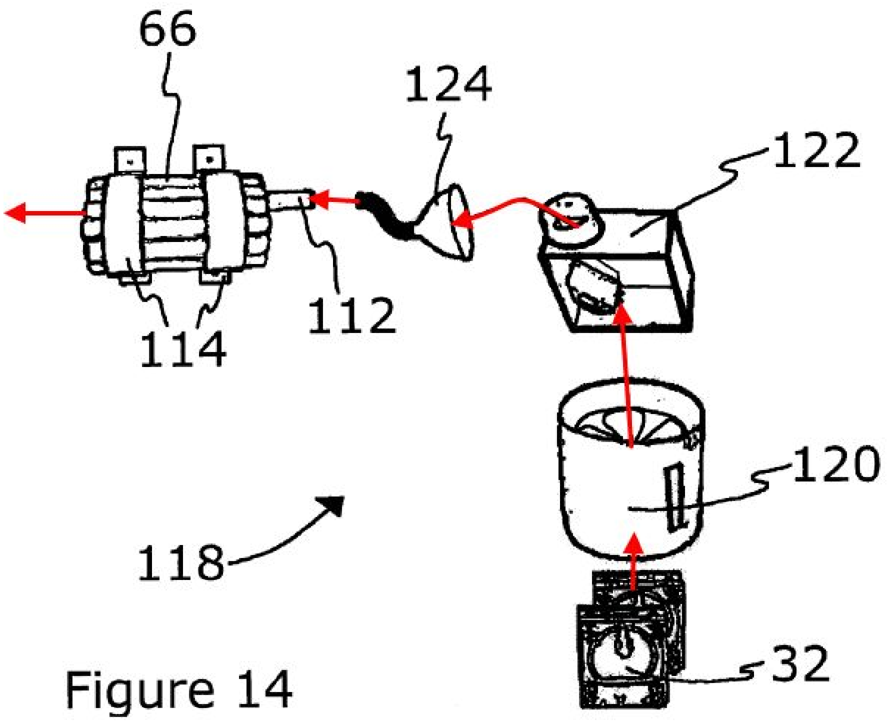

Figure 14

Situated above the duct fan **120** is a vent fan **122**, such as one in the style of a bathroom ceiling fan, which is configured to direct the air leaving the duct fan **120** in a direction perpendicular to the direction in which the duct fan **120** is directed. Preferably, attached to the exit port of the vent fan **122** is a reducing tube **124** configured to focus the heated air toward the direction of the second heat exchanger **66** and thereafter the upper front fan **68**. In other embodiments, a plurality of reducing tubes **124** are attached to the exit port of the vent fan **122** with each of the reducing tubes **124** focusing the heated air toward a different second heat exchanger tube **116** of the second heat exchanger **66**.

The heating system **10**, as depicted, therefore comprises a heating unit that is configured to heat a space utilizing water as a fuel for an electrolysis process. According to the first depicted embodiment, diagramed in FIG. 1, the water, or water-electrolyte mix, is first retained within the tank **12**. The water, or water-electrolyte mix, exits the tank **12** at the first tank outlet **16**, travels along the first conduit **74** and enters the pump inlet **28** of a pump **26**. The pump **26** compels the water, or water-electrolyte mix, to exit the pump **26** via a pump outlet **30**, where it is carried along a second conduit **74** to the cell inlet **34** of at least one separation cells **32**. Within the separation cells **32**, the electrolysis process is carried out, and the results of that process exit the separation cells **32** via the cell outlet **36** and are carried away via the primary segment **44** of a first heat exchanger **42** where the fluids are cooled, or by another conduit **74** that connects the cell outlet **36** with the primary segment **44**.

From the primary segment **44**, the fluids pass through a third conduit **74** to the secondary segment **46** of the first heat exchanger **42** where the fluids are again cooled as they circle the tank **12**. The fluids enter through the first tank inlet **18** into the tank **12**. The gases within the fluids travel through the water, or water-electrolyte mixture, within the tank **12** and out the second tank outlet **20** to a fourth conduit **74**, which carries the gases or other fluids to the gas bubbler inlet **50** of the gas bubbler **48**.

The gases are bubbled through the gas bubbler fluid therein and exit the gas bubbler **48** via the gas bubbler outlet **52**. They are carried away from the gas bubbler **48** via a fifth conduit **74** and into the condenser inlet **58** of a condenser **56**. Gases that did not condense within the condenser **56** exit the condenser **56** via the condenser outlet **60** and travel through a sixth conduit **74** to the burn unit **64**, wherein the hydrogen gas is ignited and generates heat this is directed toward the second heat exchanger **66**.

As the fluids are traveling through the heating system **10**, environmental air from the space to be heated is also traveling through the system and being heated, as indicated by the environmental air flow **78** arrows depicted in FIG. 1. That is, environmental air from the space to be heated is pulled into the external case **72** and internal case **70** via the lower front fan **68**, which pushes the environmental air past the secondary segment **46** of the first heat exchanger **42**, thereby encouraging the cooling of the fluids within the primary segment **44**. The environmental air picks up the heat that is emitted from the secondary segment **46** of the first heat exchanger **42** and then travels past the pump **26**. The pump **26** also emits heat as it is operated, thereby increasing the temperature of the environmental air. The lower rear fan **68** in the back internal side of the internal case **70** pulls the environmental air from inside the internal case **70** to outside the internal case **70** and past the primary segment **44** of the first heat exchanger **42**. This encourages cooling of the fluids within the primary segment **44**, while the heat emitted from the primary segment **44** increases the temperature of the environmental air flowing by.

The upper rear fan **68** then pulls the environmental air up past the separation cells **32**, and the heat emitted from the electrolysis process within the separation cells **32** further increases the temperature of the environmental air flowing thereby. The upper rear fan **68** directs the air toward the burn unit **64**, where the heat emitted from the burning of the hydrogen gas released during electrolysis further adds to the heat of the environmental air, which heating is also aided by the second heat exchanger **66**. The upper front fan **68** then pulls the heated environmental air outside of the external case **72** and into the space to be heated. Accordingly, the heat emitted by the pump **26**, the heat emitted by the primary segment **44** and secondary segment **46** of the first heat exchanger **42**, the heat emitted by the separation cells **32**, and the heat emitted by the burn unit **64** all contribute to increase the temperature of the environmental air fed back into the space to be heated.

Preferably, the pump **26**, fans **68**, separation cells **32**, and burn unit **64** are all powered by a shared power source (not shown). Also preferably, this power source is located within the external case **72**, if not also the internal case **70**. Therefore, the heat given off by the power source during operation will also contribute to increasing the temperature of the environmental air flowing through the heating system **10**. Likewise, any heat given off by the fans **68** during operation will also be captured and fed out of the heating system **10**.

As the tank **12**, gas bubbler **48**, and condenser **56** will all, during operation, hold some amount of fluid, likely water **96**, it is further preferred that the tank **12** further define a tank port opening **84** and a tank bubbler port **22** and a tank condenser port **24.** Likewise, the condenser **56** defines a condenser fluid port **62** and the gas bubbler **48** defines a gas bubbler fluid port **54.** Preferably, the condenser fluid port **62** is defined in a lower area of the condenser **56**, and the gas bubbler fluid port **54** is defined in a lower part of the gas bubbler **48.**

A seventh conduit **74** operatively connects the tank bubbler port **22** with the gas bubbler fluid port **54**, and an eight conduit **74** operatively connects the tank condenser port **24** with the condenser fluid port **62.** Along the seventh conduit **74** and the eight conduit **74** are located valves configured to selectively open the conduits **74** to allow communication between the tank **12** and the respective condenser **56** or gas bubbler **48.** As such, when the level of gas bubbler fluid within the gas bubbler **48** becomes undesirably low, the valve along the seventh conduit **74** can be operated to allow water **96** or water-electrolyte mixture contained within the tank **12** to flow into the gas bubbler **48** so as to raise the level of gas bubbler fluid within the gas bubbler **48.**

Contrarily, when the level of gas bubbler fluid within the gas bubbler **48** becomes undesirably low, the valve along the seventh conduit **74** can be operated to allow gas bubbler fluid within the gas bubbler **48** to transfer to the tank **12**, thereby lowering the level of gas bubbler fluid within the **48.** Similarly, when the amount of condensate within the condenser **56** becomes undesirably great, the valve along the eighth conduit **74** can be operated to allow transfer of the condensate to the tank **12**, thereby lowering the level of the condensate within the condenser **56.** Contrarily, if additional liquid within the condenser **56** becomes desired, the valve along the eighth conduit **74** can be operated to allow transfer of water **96** or water-electrolyte mixture from the tank **12** to the condenser **56**, thereby raising the level of the fluid within the condenser **56.**

It is further preferred that the heating system **10** include an on/off switch **80**, accessible from outside the external case **72**, and configured to power on the power source so as to start the operation of the heating system **10.** Ideally, the heating system **10** also includes a on/off light **82** configured to indicate whether or not the heating system **10** is turned on and in operation. In some embodiments, the heating system **10** also includes temperature sensors and fluid level sensors so as to provide data on the operating conditions of the system, which data can be utilized to prevent unsafe conditions, such as when the water **96** levels within the tank **12** grow too low or when the temperatures within the conduits **74** grow too high. These sensors are further used to indicate to a user when the water **96**, electrolyte, and/or anti-foaming agent within the tank **12** need to be replaced or refilled via the tank refill port **14.**

This gas bubbler **48** further defines a gas bubbler fluid port **54**, preferably in a lower region of the gas bubbler **48**. The gas bubbler fluid port **54** is operatively connected with the tank **12** via another conduit **74** that is configured to pass water and/or gas bubbler fluid between the gas bubbler **48** and the tank **12** via a tank bubbler port **22** defined in the tank **12** wall.

As the heating system **10** is configured to heat a space, it is further configured to be incorporated into a traditional furnace system to form a furnace hybrid system **126**, as shown in FIG. 15. As shown, the traditional furnace system includes a furnace heat box **130** that receives air to be heated a cold air return **128**. The heated air exits the furnace heat box **130** through furnace hot air ducts **132**. To incorporate the heating system **10** into the traditional furnace system to form a furnace hybrid system **126**, a secondary cold air duct **134** is spliced into the cold air return **128** and fed to the lower front fan **68** of the heating system **10**. A secondary hot air duct **136** is spliced into the furnace hot air ducts **132** and is connected to the upper front fan **68** of the heating system **10**.

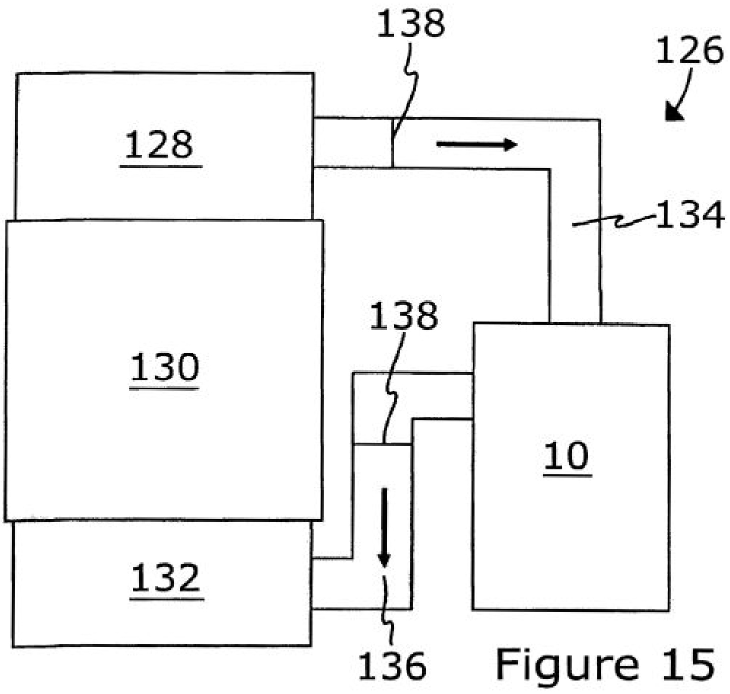

Figure 15

- **10: The Heating System**
- **126: Furnace Hybrid System**
- **128: Cold Air Return**
- **130: Furnace Heat Box**
- **132: Furnace Hot Air Ducts**
- **134: Cold Air Duct**
- **136: Secondary Hot Air Duct**
- **138: Breeze Blockers**

Breeze blockers **138**, or one-way vents, are included in both the secondary cold air duct **134** and the secondary hot air duct **136** to prevent the air within the secondary cold air duct **134** and the secondary hot air duct **136** from traveling in the opposite direction, and against the fans **68** of the heating system **10**.

Preferably, the conduits **74** of the heating system **10** are made of conductive metal tubes or pipe, to allow ready dissipation of heat where the conduits **74** are not covered by insulation **76**.

Also, preferably, the level of the water **96** or water-electrolyte mixture within the tank **12** is kept at a level below the top of the tank **12**, so that a space is left at the top of the tank **12** wherein hydrogen and/or oxygen gas can gather and remain until the system is put into operation to burn the hydrogen gas with the burn unit **64**. Accordingly, as hydrogen gas and oxygen gas are produced by the separation cells **32**, if the heating system **10** is turned off, the as-yet-unused gases will be retained largely within the tank **12** until the heating system **10** is restarted.

The exemplary embodiments shown in the figures and described above illustrate, but do not limit, the system. It should be understood that there is no intention to limit the system to the specific form disclosed; rather, the system is to cover all modifications, alternative constructions, and equivalents falling within the spirit and scope of the invention as defined in the claims.

For example, while the exemplary embodiments illustrate the use of a number of conduits **74**, the system is not limited to use with the conduits arranged only as depicted, but may be used with a different number of conduits differently positioned. For example, in some embodiments, the front internal side of the internal case **70** further defines a upper conduit opening **88** configured to allow conduits **74** to pass from inside the internal case **70** to outside the internal case **70**, or vice versa.

The upper conduit opening **88** is further configured to allow electrical cords to connect the power source with the separation cells **32** or other devices external to the internal case **70** needing power. Still further, while the exemplary embodiments locate a number of the components of the heating system **10** external to the internal case **70**, in other embodiments, the components, including the primary segment **44** of the first heat exchanger **42** and the separation cells **32** are arranged to be inside the internal case **70.**

Moreover, while in the first depicted embodiment, the first heat exchanger **42** includes a primary segment **44** and a secondary segment **46**, with the primary segment **44** being arranged in a coil configuration and with the secondary segment **46** being arranged in a coil configuration winding around the tank **12**, in other embodiments, the first heat exchanger **42** comprises a single coil that winds around the gas bubbler **48**, rather than around the tank **12**, before passing back into the tank **12**.

Further, while **the system is not limited to use with the heating of rooms in a home**, it is expected that various embodiments of the system will be particularly useful in such situations. In any regard, the foregoing description should not be construed to limit the scope of the invention, which is defined in the following claims.

Accordingly, while there is shown and described the present preferred embodiments of the system, it is to be distinctly understood that this system is not limited thereto but may be variously embodied to practice within the scope of the following claims. From the foregoing description, it will be apparent that various changes may be made without departing from the spirit and scope of the invention, as defined by the following claims.

Patent claims, citations and more information are available.
Download the complete document from the Patent Office
http://pdfaiw.uspto.gov/.aiw?Docid=20100187321
and Google www.google.co.il/patents/US20100187321

THIS INVENTION WAS PUT TO THE TEST – AND PASSED – see below

Independent Tests, TV Coverage and Products

Sources: The company's website http://www.hhohhu.com, my own data and others

Based on the Patent shown above by Mark Akkerman and Randy Bunn, the company called HHOHHU (HHO Home Heater Unit) has developed a self-contained home heating unit that utilizes water as its fuel. They sell plans for the system to enable people to build one of these from parts available at local hardware/electric stores. The main advantages:

- Inexpensive and energy-efficient heating,
- Adds humidity to the air,
- Runs continuously,
- Great conversation piece!
- One of the best demonstrations of several Waterfuel home applications.

The Patent owners said their first version of the HHOHHU draws ~450 Watts and could heat up 1,000 square feet. Does this "hold water" when put to the test? The following independent tests is from forum participant 'woodpecker' on 9 Feb. 2009:

> ***"I have made some tests with the gas, heating a room:***
>
> ***Room size: 15 Cubic m., Start temp. 11 degree celsius***
>
> ***I used 14 copper tubes. Temperature was raised after 30 minutes by 14 degr.***
>
> ***Total Watt used: 330***
>
> ***For comparison, i made the same test once more with a electric heater with 450 Watt:***
>
> ***Start temp. 11 degree, after 30 min. Tempt. was raised to 13,5 degree.***
>
> ***So the gas was heating with less Watt a little bit more.***
>
> ***The copper tubes get quite hot, but after installing a little fan, I could touch them with bare hands."***

These results are not spectacular, but ARE DEFINITELY POSITIVE and can surely be enhanced by professional design and factory build. Add the environmental and safety benefits and we're in the green with this one.

Products

Companies in Europe offer DIY info (www.FreeFromFuel.com) and commercial systems (www.HHO-Heating-Systems.com). Photos below are from www.hhohhu.com/m20.htm

REPLICATION TIP: What were they thinking? With all due respect to safety features, please do NOT install heaters in wooden boxes!

← The DVD shown here was rebranded 'Water4Gas' but it was authored by others. The DVD is divided into 95 short videos, each describing one step in building the heater system and its automation circuitry. At this time of writing it's available on eBay. Plans and downloads from the inventors of Patent № US20100187321 are offered at **http://hhohhu.com**

This HHO Heater Invention on Major TV News

Channel 6 News (ABC)

https://youtu.be/t8igW-cxnDw

Fox 12 News

https://youtu.be/WcsyO6HSzEc

US 20120244485A1

(19) **United States**

(12) **Patent Application Publication**
MIKUSKI et al.

(10) **Pub. No.: US 2012/0244485 A1**
(43) **Pub. Date: Sep. 27, 2012**

(54) HEATING SYSTEM WITH INTEGRATED HYDROGEN GENERATION

(76) Inventors: **Shawn MIKUSKI**, Brick, NJ (US); **Jayson Eduard VAJDA**, Rivas (NI); **Stephen John GAYNES**, McHenry, IL (US)

(21) Appl. No.: **13/417,802**

(22) Filed: **Mar. 12, 2012**

Related U.S. Application Data

(60) Provisional application No. 61/466,714, filed on Mar. 23, 2011, provisional application No. 61/537,894, filed on Sep. 22, 2011.

Publication Classification

(51) **Int. Cl.**
F27B 19/00 (2006.01)

(52) **U.S. Cl.** **432/92**

(57) ABSTRACT

A heating system for heating a liquid includes a fuel cell having a plurality of charged plates operatively positioned within the fuel cell. An electrolytic solution supply conduit is operatively connected to the fuel cell for supplying electrolytic solution to the fuel cell. In one embodiment, a water conduit supplies water to the fuel cell. The water in the electrolytic solution disposed between said charged plates is converted to $H_2H_2O_2$ gas. A torch is provided for receiving the $H_2H_2O_2$ gas. A heat exchanger is operatively positioned relative to the torch for receiving heat from the torch and supplying the heat to a manifold for heating a liquid. In one embodiment, the fuel cell and the electrolytic solution are disposed within a first chamber of a reservoir and a cooling fluid is disposed within the second chamber of the reservoir.

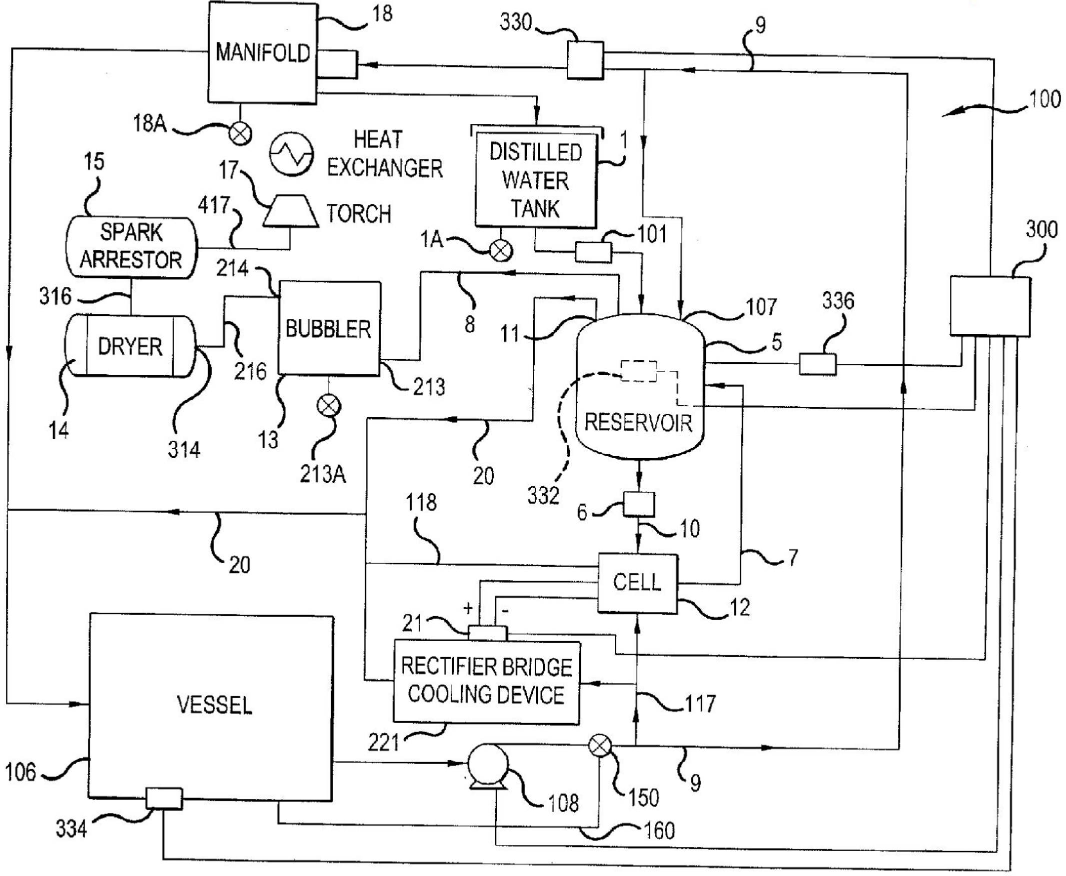

FIG. 1

ABSTRACT

A heating system for heating a liquid includes a fuel cell having a plurality of charged plates operatively positioned within the fuel cell. An electrolytic solution supply conduit is operatively connected to the fuel cell for supplying electrolytic solution to the fuel cell. In one embodiment, a water conduit supplies water to the fuel cell. The water in the electrolytic solution disposed between said charged plates is converted to $H_2H_2O_2$ gas. A torch is provided for receiving the $H_2H_2O_2$ gas. A heat exchanger is operatively positioned relative to the torch for receiving heat from the torch and supplying the heat to a manifold for heating a liquid. In one embodiment, the fuel cell and the electrolytic solution are disposed within a first chamber of a reservoir and a cooling fluid is disposed within the second chamber of the reservoir.

DESCRIPTION

BACKGROUND OF THE INVENTION

1. Field of the Invention

The present invention is directed to a heating system that employs an integrated $H_2H_2O_2$ generating fuel cell for producing a fuel for heating a heat exchanger for heating a liquid in a large vessel such as a swimming pool, spa or water fountain.

2. Description Of Background Art

There is a common need in the swimming pool and spa industry to heat large quantities of water in a swimming pool or spa to make for a more pleasurable swimming/bathing experience. This is normally accomplished by adding a furnace to the water filtration system. However, conventional heating systems normally consist of natural gas, liquid propane gas or electrical heating elements that are expensive to operate. In the alternative, a conventional heating system may rely on polymer solar panels that are dependent on daylight and exceptional weather conditions. Similarly, a conventional heating system may rely on a heat pump device which is dependent on warm air weather conditions.

Conventional furnaces that use gas and/or electricity can add heat to the water in a swimming pool or spa very quickly. However, conventional furnaces have a distinct disadvantage in that they must rely on a supplier of the primary fuel needed to heat the water. The suppliers of natural gas, liquid propane gas or electrical energy can raise the price to whatever the market will bear. Therefore, conventional furnaces are very expensive to operate. Polymer solar panels operate on sunlight and work without any additional outside energy. However, polymer solar panels lack the ability to quickly change the temperature of the liquid in the vessel they are heating. In addition, polymer solar panels are limited to producing heat only during sunlight hours, on sunny days and days without rain which also limits the effectiveness of the solar panels. Similarly, heat pumps function by extracting heat from outside warm air. In colder temperatures, heat pumps are ineffective at heating swimming pool water.

SUMMARY AND OBJECTS OF THE INVENTION

According to an embodiment of the present invention, a heating system is provided that uses electrical power to create $H_2H_2O_2$ from water in an electrolytic solution by use of a fuel cell. The $H_2H_2O_2$ is then fed, without being stored, to a torch where it is ignited and provides heat to a heat exchanger. The heat exchanger then heats the liquid which passes through the exchanger via an independent pump, or a circulation pump of the vessel.

According to an embodiment of the present invention, a majority of the energy used in the heating system is generated directly by the fuel cell. Thus, it is not necessary to purchase fuel from a utility service at an ever increasing market price.

According to an embodiment of the present invention, a relatively small amount of electrical input is used to produce a relatively high amount of heat as compared to a conventional conductive heating unit.

According to an embodiment of the present invention, the heating system can be made to service a variety of sizes of various applications. The heating system may be scaled up or down to meet the heating time expectations of the consumer.

According to an embodiment of the present invention, the fuel cell is not susceptible to output loss at high temperatures as compared to other fuel cells. The fuel cell according to the present invention employs an independent pump, a circulation pump and/or a filter/pump combination to run the liquid from the vessel around the fuel cell to cool the fuel cell. In addition, the excess thermal output from the hydrogen generation in the fuel cell is used to heat the liquid that is returned to the vessel.

According to an embodiment of the present invention, hydrogen is not stored or pressurized. $H_2H_2O_2$ gas is generated based on the need and size of the system.

According to an embodiment of the present invention, the heating system can be used at any time and is not limited to sunlight hours or to warm air conditions. This is to be contrasted to the operation of polymer solar panels which require direct sun light and to the operation of heat pumps which require a certain temperature of ambient air to be effective. Thus, the present invention can operate and generate heat on a twenty-four hour basis, on a cloudy day and on a rainy day or cold day.

According to an embodiment of the present invention, the heating system also has the ability to replace large and inefficient natural gas and propane fired heaters. Thus, energy savings are achieved while utilizing the most prevalent source of fuel in the world, hydrogen.

According to an embodiment of the present invention, the heating system includes a reservoir divided into at least a first chamber and a second chamber. A fuel cell includes a plurality of charged plates with the fuel cell being operatively positioned within the first chamber of said reservoir. Water and an electrolytic solution are disposed within the first chamber of the reservoir for supplying water and the electrolytic solution to the fuel cell. A cooling fluid is disposed within the second chamber of the reservoir for cooling the fuel cell.

The water and the electrolytic solution are disposed between said charged plates and the water is converted to $H_2H_2O_2$ gas. A torch is provided for receiving the $H_2H_2O_2$ gas wherein a heat exchanger operatively positioned relative to the torch receives heat from the torch for supplying the heat to a manifold for heating a liquid.

According to an embodiment of the present invention, the heating system further includes a reservoir top positioned on a top surface of the reservoir for closing the reservoir and a bracket secured to the reservoir top for positioning the fuel cell within the first chamber in the reservoir.

According to an embodiment of the present invention, the heating system further includes a supply conduit with a shut off valve and an outlet conduit with a shut off valve operatively connected to said second chamber in said reservoir and a supply conduit with a shut off valve and an outlet conduit with a shut off valve operatively connected to said first chamber in said reservoir.

According to an embodiment of the present invention, the heating system for heating a liquid includes a fuel cell having a plurality of charged plates operatively positioned within the fuel cell. An electrolytic solution supply conduit is operatively connected to the fuel cell for supplying electrolytic solution to the fuel cell. A thermoelectric device is operatively positioned relative to the fuel cell for selectively cooling or heating solution. The water in the electrolytic solution disposed between the charged plates is converted to $H_2H_2O_2$ gas and is supplied to a torch with a heat exchanger operatively positioned relative to the torch for receiving heat from the torch and supplying the heat to a manifold for heating a liquid.

According to an embodiment of the present invention, the heating system further includes a thermostat operatively connected to the thermoelectric device for controlling the cooling or heating of the electrolytic solution.

According to an embodiment of the present invention, the heating system for heating a liquid includes a fuel cell having a plurality of charged plates operatively positioned within the fuel cell. A reservoir supplies electrolytic solution to the fuel cell. A thermoelectric device is operatively positioned relative to the reservoir for selectively cooling or heating the electrolytic solution. The water in the electrolytic solution disposed between the charged plates is converted to $H_2H_2O_2$ gas which is supplied to a torch with a heat exchanger operatively positioned relative to the torch for receiving heat from the torch and supplying the heat to a manifold for heating a liquid.

According to an embodiment of the present invention, the heating system further includes a thermostat operatively connected to the thermoelectric device for controlling the cooling or heating of the electrolytic solution.

According to an embodiment of the present invention, the heating system for heating a liquid includes a fuel cell having a plurality of charged plates operatively positioned within the fuel cell. An electrolytic solution supply conduit is operatively connected to the fuel cell for supplying electrolytic solution to the fuel cell. A radiator is operatively connected to the heating system for cooling the electrolytic solution. A fan is provided for supplying a flow of air to the radiator for cooling the radiator. The water in the electrolytic solution disposed between the charged plates is converted to $H_2H_2O_2$ gas that is supplied to a torch with a heat exchanger operatively positioned relative to the torch for receiving heat from the torch and supplying the heat to a manifold for heating a liquid.

According to an embodiment of the present invention, the fuel cell may be for use in a heating system for heating a liquid wherein a first outer plate is provided with a predetermined length and width. A second outer plate is provided with a predetermined length and width. A plurality of charged plates are operatively positioned between the first outer plate and said second outer plate. The plurality of charged plates are oversized relative to the first and second outer plates to include a heat exchange area that projects past the predetermined length and width of the first and second outer plates;. A conduit is provided for supplying water and an electrolytic solution to said fuel cell wherein the water and the electrolytic solution are disposed between said charged plates and the water is converted to $H_2H_2O_2$ gas.

According to an embodiment of the present invention, the heating system for heating a liquid includes a fuel cell having a plurality of charged plates operatively positioned within said fuel cell. A reservoir is operatively connected to the fuel cell for supplying electrolytic solution to the fuel cell. An evaporator is operatively positioned within the reservoir for cooling the electrolytic solution. A metering device, a dryer, a condenser and a compressor are operatively connected to the evaporator for supplying a compressed gas for cooling the evaporator and for cooling the electrolytic solution;

Further scope of applicability of the present invention will become apparent from the detailed description given hereinafter. However, it should be understood that the detailed description and specific examples, while indicating preferred embodiments of the invention, are given by way of illustration only, since various changes and modifications within the spirit and scope of the invention will become apparent to those skilled in the art from this detailed description.

BRIEF DESCRIPTION OF THE DRAWINGS

The present invention will become more fully understood from the detailed description given hereinbelow and the accompanying drawings which are given by way of illustration only, and thus are not limitative of the present invention, and wherein:

FIG. 1 is a schematic view of the heating system according to an embodiment of the present invention;

FIG. 2 is a schematic view of the reservoir with a heat exchanger being positioned within and the $H_2H_2O_2$ being discharged therefrom;

FIG. 3 is a schematic view of the an embodiment of the heating system according to the present invention;

FIG. 4 is a flow chart illustrating the steps in the heating of the liquid in the heating system of the present invention;

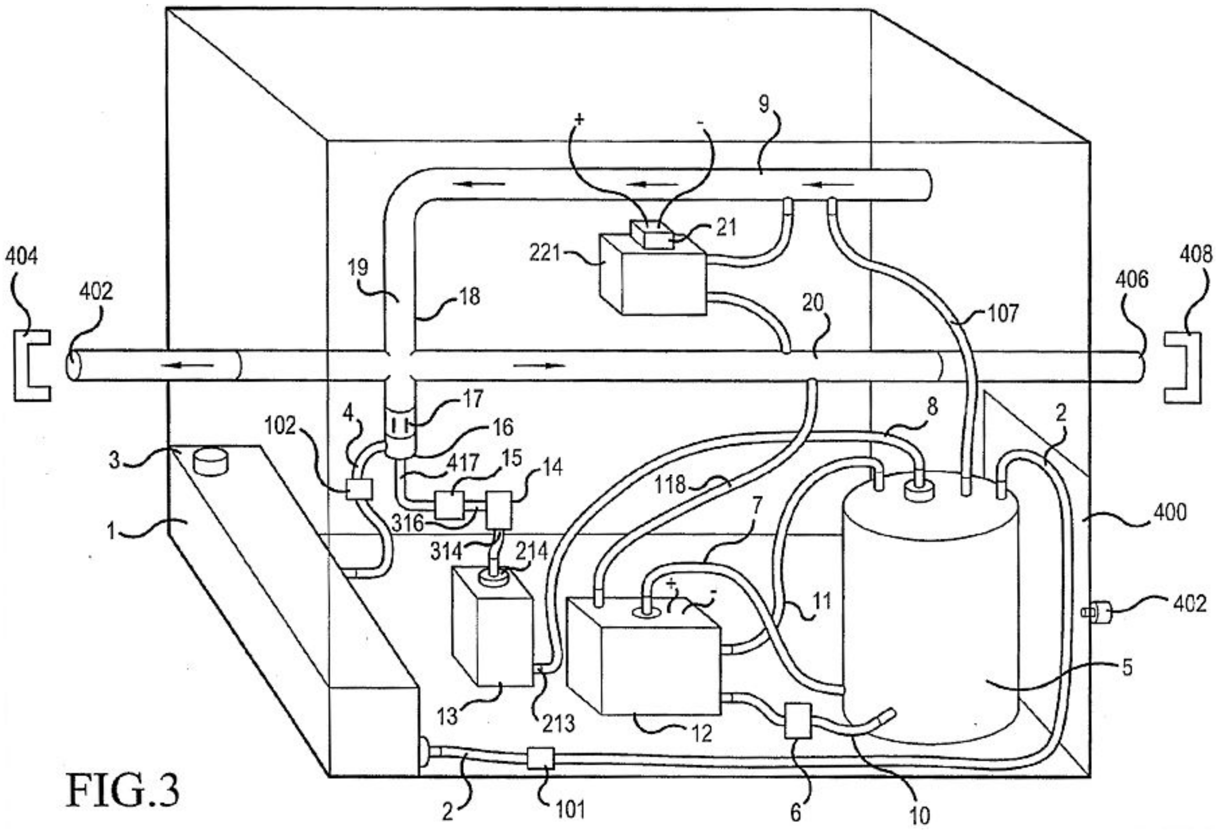

FIG.3

FIG. 5 is a schematic view of a rectifier bridge and a cooler for use in the present invention;

FIG. 6 is a top view of the rectifier bridge and cooler illustrated in FIG. 5;

FIG. 7 is view of a fuel cell illustrating a cooling conduit disposed within;

FIG. 8 is an exploded view of the fuel cell illustrated in FIG. 7;

FIG. 9 is a schematic view of the heating system according to an embodiment of the present invention wherein the warm liquid from the reservoir is supplied to the fuel cell;

FIG. 10 is a schematic view of the heating system according to an embodiment of the present invention wherein the warm liquid from the reservoir is supplied to the rectifier bridge cooling device;

FIG. 11 is a view of the torch showing the arrangement for fitting together with the heat exchanger;

FIG. 12 is a top view of the torch;

FIG. 13 is a flow chart setting forth the steps in the operation of a mechanical control of the conductivity of the electrolyte in the reservoir;

FIG. 14 is a flow chart setting forth the steps in the operation of an electrical control of the conductivity of the electrolyte in the reservoir;

FIG. 15 is a schematic view of an integrated reservoir and the fuel cell being combined into a single unit;

FIG. 16 is an exploded view of the various components of the integrated reservoir and the fuel cell;

FIG. 17 is a schematic view of the heating system according to a second embodiment of the present invention wherein an integrated reservoir and fuel cell are utilized;

FIG. 18 is a view of the integrated reservoir and fuel cell in a closed condition with shut off valves being operatively connected to the conduits supplying/discharging fluid therefrom;

FIG. 19 is a schematic view of the reservoir with an embodiment of a heat exchanger with a thermoelectric device being positioned within the reservoir for selectively heating or cooling the electrolytic solution;

FIG.19

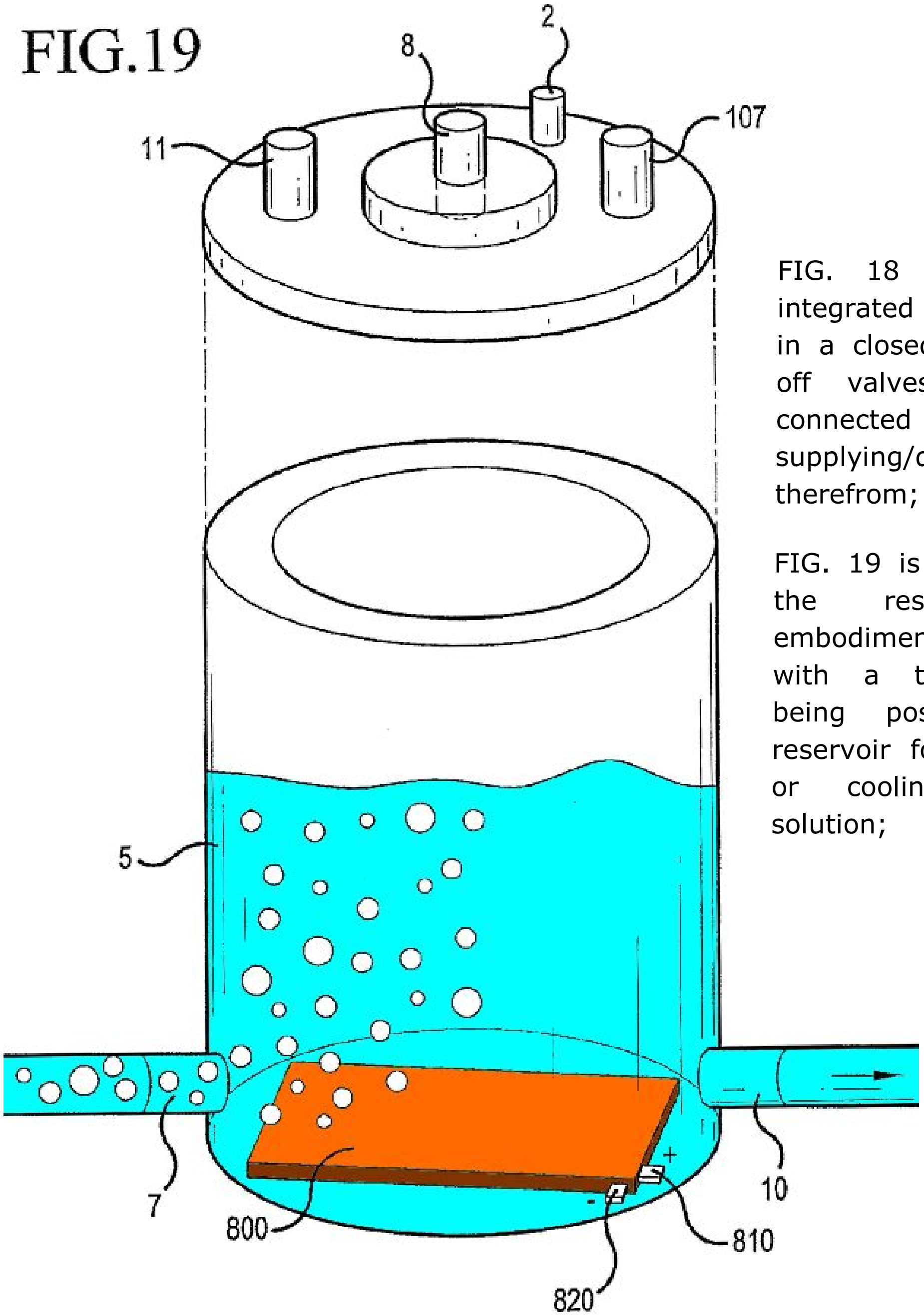

FIG. 20 is a schematic view of an embodiment wherein a radiator and fan are operatively connected to the integrated reservoir and the fuel cell unit for cooling the electrolytic solution;

FIG. 21A is a schematic view of an embodiment wherein a radiator and fan are operatively connected to the fuel cell for cooling the electrolytic solution;

FIG. 21B is a schematic view of an embodiment wherein a radiator and fan are operatively connected to the reservoir for cooling the electrolytic solution;

FIG. 21C is a schematic view of an embodiment wherein a radiator and fan are operatively connected to the integrated reservoir and the fuel cell unit for cooling the electrolytic solution that is pumped into the radiator;

FIG. 22 is a view of the positively and negatively charged plates acting as a heat sink;

FIG. 23 is a view wherein gaskets are positioned between the positively and negatively charged plates thereby producing a heat sink effect; and

FIG. 24 is a schematic view of an embodiment that employs compressed vapor cooling to cool the electrolytic solution in the integrated reservoir and the fuel cell unit.

ABSTRACT

A heating system for heating a liquid includes a fuel cell[158] having a plurality of charged plates operatively positioned within the fuel cell. An electrolytic solution supply conduit is operatively connected to the fuel cell for supplying electrolytic solution to the fuel cell. In one embodiment, a water conduit supplies water to the fuel cell. The water in the electrolytic solution disposed between said charged plates is converted to $H_2H_2O_2$ gas. A torch is provided for receiving the $H_2H_2O_2$ gas. A heat exchanger is operatively positioned relative to the torch for receiving heat from the torch and supplying the heat to a manifold for heating a liquid. In one embodiment, the fuel cell and the electrolytic solution are disposed within a first chamber of a reservoir and a cooling fluid is disposed within the second chamber of the reservoir.

DESCRIPTION

BACKGROUND OF THE INVENTION

1. Field of the Invention

The present invention is directed to a heating system that employs an integrated $H_2H_2O_2$ generating fuel cell for producing a fuel for heating a heat exchanger for heating a liquid in a large vessel such as a swimming pool, spa or water fountain.

---

[158] To most people the term "fuel cell" means a cell that TAKES IN hydrogen to produce electricity; here they refer to a cell that takes in electricity to produce $H_2H_2O_2$ gas (HHO) but now that Stanley Meyer and others have used the term 'fuel cell' in this manner, in official documents, the terms are entwined and we just need to pay attention.

2. Description of Background Art

There is a common need in the swimming pool and spa industry to heat large quantities of water in a swimming pool or spa to make for a more pleasurable swimming/bathing experience. This is normally accomplished by adding a furnace to the water filtration system. However, conventional heating systems normally consist of natural gas, liquid propane gas or electrical heating elements that are expensive to operate. In the alternative, a conventional heating system may rely on polymer solar panels that are dependent on daylight and exceptional weather conditions. Similarly, a conventional heating system may rely on a heat pump device which is dependent on warm air weather conditions.

Conventional furnaces that use gas and/or electricity can add heat to the water in a swimming pool or spa very quickly. However, conventional furnaces have a distinct disadvantage in that they must rely on a supplier of the primary fuel needed to heat the water. The suppliers of natural gas, liquid propane gas or electrical energy can raise the price to whatever the market will bear. Therefore, conventional furnaces are very expensive to operate. Polymer solar panels operate on sunlight and work without any additional outside energy. However, polymer solar panels lack the ability to quickly change the temperature of the liquid in the vessel they are heating. In addition, polymer solar panels are limited to producing heat only during sunlight hours, on sunny days and days without rain which also limits the effectiveness of the solar panels. Similarly, heat pumps function by extracting heat from outside warm air. In colder temperatures, heat pumps are ineffective at heating swimming pool water.

SUMMARY AND OBJECTS OF THE INVENTION

According to an embodiment of the present invention, a heating system is provided that uses electrical power to create $H_2H_2O_2$ from water in an electrolytic solution by use of a fuel cell. The $H_2H_2O_2$ is then fed, without being stored, to a torch where it is ignited and provides heat to a heat exchanger. The heat exchanger then heats the liquid which passes through the exchanger via an independent pump, or a circulation pump of the vessel.

According to an embodiment of the present invention, a majority of the energy used in the heating system is generated directly by the fuel cell. Thus, it is not necessary to purchase fuel from a utility service at an ever increasing market price.[159]

According to an embodiment of the present invention, a relatively small amount of electrical input is used to produce a relatively high amount of heat as compared to a conventional conductive heating unit.

According to an embodiment of the present invention, the heating system can be made to service a variety of sizes of various applications. The heating system may be scaled up or down to meet the heating time expectations of the consumer.

---

[159] They attack the phenomenon of greed in an official Patent…I find it interesting. Do you?

According to an embodiment of the present invention, the fuel cell is not susceptible to output loss at high temperatures as compared to other fuel cells. The fuel cell according to the present invention employs an independent pump, a circulation pump and/or a filter/pump combination to run the liquid from the vessel around the fuel cell to cool the fuel cell. In addition, the excess thermal output from the hydrogen generation in the fuel cell is used to heat the liquid that is returned to the vessel.

According to an embodiment of the present invention, hydrogen is not stored or pressurized. $H_2H_2O_2$ gas is generated based on the need and size of the system.

According to an embodiment of the present invention, the heating system can be used at any time and is not limited to sunlight hours or to warm air conditions. This is to be contrasted to the operation of polymer solar panels which require direct sun light and to the operation of heat pumps which require a certain temperature of ambient air to be effective. Thus, the present invention can operate and generate heat on a twenty-four hour basis, on a cloudy day and on a rainy day or cold day.

According to an embodiment of the present invention, the heating system also has the ability to replace large and inefficient natural gas and propane fired heaters. Thus, energy savings are achieved while utilizing the most prevalent source of fuel in the world, hydrogen.

According to an embodiment of the present invention, the heating system includes a reservoir divided into at least a first chamber and a second chamber. A fuel cell includes a plurality of charged plates with the fuel cell being operatively positioned within the first chamber of said reservoir. Water and an electrolytic solution are disposed within the first chamber of the reservoir for supplying water and the electrolytic solution to the fuel cell. A cooling fluid is disposed within the second chamber of the reservoir for cooling the fuel cell. The water and the electrolytic solution are disposed between said charged plates and the water is converted to $H_2H_2O_2$ gas. A torch is provided for receiving the $H_2H_2O_2$ gas wherein a heat exchanger operatively positioned relative to the torch receives heat from the torch for supplying the heat to a manifold for heating a liquid.

According to an embodiment of the present invention, the heating system further includes a reservoir top positioned on a top surface of the reservoir for closing the reservoir and a bracket secured to the reservoir top for positioning the fuel cell within the first chamber in the reservoir.

According to an embodiment of the present invention, the heating system further includes a supply conduit with a shut off valve and an outlet conduit with a shut off valve operatively connected to said second chamber in said reservoir and a supply conduit with a shut off valve and an outlet conduit with a shut off valve operatively connected to said first chamber in said reservoir.

According to an embodiment of the present invention, the heating system for heating a liquid includes a fuel cell having a plurality of charged plates operatively positioned within the fuel cell. An electrolytic solution supply conduit is operatively connected to the fuel cell for supplying electrolytic solution to the fuel cell. A thermoelectric device is operatively positioned relative to the fuel cell for selectively cooling or heating solution. The water in the electrolytic solution disposed between the charged plates is converted to $H_2H_2O_2$ gas and is supplied to a torch with a heat exchanger operatively positioned relative to the torch for receiving heat from the torch and supplying the heat to a manifold for heating a liquid.

According to an embodiment of the present invention, the heating system further includes a thermostat operatively connected to the thermoelectric device for controlling the cooling or heating of the electrolytic solution.

According to an embodiment of the present invention, the heating system for heating a liquid includes a fuel cell having a plurality of charged plates operatively positioned within the fuel cell. A reservoir supplies electrolytic solution to the fuel cell. A thermoelectric device is operatively positioned relative to the reservoir for selectively cooling or heating the electrolytic solution. The water in the electrolytic solution disposed between the charged plates is converted to $H_2H_2O_2$ gas which is supplied to a torch with a heat exchanger operatively positioned relative to the torch for receiving heat from the torch and supplying the heat to a manifold for heating a liquid.

According to an embodiment of the present invention, the heating system further includes a thermostat operatively connected to the thermoelectric device for controlling the cooling or heating of the electrolytic solution.

According to an embodiment of the present invention, the heating system for heating a liquid includes a fuel cell having a plurality of charged plates operatively positioned within the fuel cell. An electrolytic solution supply conduit is operatively connected to the fuel cell for supplying electrolytic solution to the fuel cell. A radiator is operatively connected to the heating system for cooling the electrolytic solution. A fan is provided for supplying a flow of air to the radiator for cooling the radiator. The water in the electrolytic solution disposed between the charged plates is converted to $H_2H_2O_2$ gas that is supplied to a torch with a heat exchanger operatively positioned relative to the torch for receiving heat from the torch and supplying the heat to a manifold for heating a liquid.

According to an embodiment of the present invention, the fuel cell may be for use in a heating system for heating a liquid wherein a first outer plate is provided with a predetermined length and width. A second outer plate is provided with a predetermined length and width. A plurality of charged plates are operatively positioned between the first outer plate and said second outer plate. The plurality of charged plates are oversized relative to the first and second outer plates to include a heat exchange area that projects past the predetermined length and width of the first and second outer plates;. A conduit is provided for supplying water and an electrolytic solution to said fuel cell wherein the water and the electrolytic solution are disposed between said charged plates and the water is converted to $H_2H_2O_2$ gas.

According to an embodiment of the present invention, the heating system for heating a liquid includes a fuel cell having a plurality of charged plates operatively positioned within said fuel cell. A reservoir is operatively connected to the fuel cell for supplying electrolytic solution to the fuel cell. An evaporator is operatively positioned within the reservoir for cooling the electrolytic solution. A metering device, a dryer, a condenser and a compressor are operatively connected to the evaporator for supplying a compressed gas for cooling the evaporator and for cooling the electrolytic solution.

Further scope of applicability of the present invention will become apparent from the detailed description given hereinafter. However, it should be understood that the detailed description and specific examples, while indicating preferred embodiments of the invention, are given by way of illustration only, since various changes and modifications within the spirit and scope of the invention will become apparent to those skilled in the art from this detailed description.

BRIEF DESCRIPTION OF THE DRAWINGS

Detailed Description of The Preferred Embodiments

As illustrated in FIGS. 1-3, a heating system 100 is provided for heating a liquid. The heating system 100 includes a water tank or a distilled water tank 1 for holding distilled water that will be added to a reservoir 5 via a peristaltic pump, centrifugal pump or any suitable pump 101 (hereinafter referred to as a pump) which will transfer the distilled water from the distilled water tank 1 to an area adjacent to the bottom of the reservoir 5 containing the water in the electrolytic solution. The use of the pump 101 will maintain the electrolytic solution in the reservoir 5 at an optimum conductivity level. Distilled water in the tank 1 will be replenished by adding more distilled water to the tank manually through the opening 3. In addition, distilled water may also be captured in the torch and manifold area from the combustion of the $H_2H_2O_2$ fuel as well as the condensation created in the manifold and pumped back to the distilled water tank 1 with a pump.

The pumps 101 and 102 can be powered by an AC or DC electricity source. In the alternative, the pumps 101 and 102 can be powered by electricity generated by a hydroelectric device powered by a circulation pump 108 of a vessel 106.

The reservoir 5 will perform several functions. The first function will be to hold and contain the electrolytic solution. The water in the solution will be used to create the $H_2H_2O_2$ gas. After the water in the electrolytic solution is supplied to the fuel cell and $H_2H_2O_2$ gas is generated from the water, the reservoir 5 will also be used to collect the $H_2H_2O_2$ gas. A pump 6 will ensure that the electrolytic solution which is

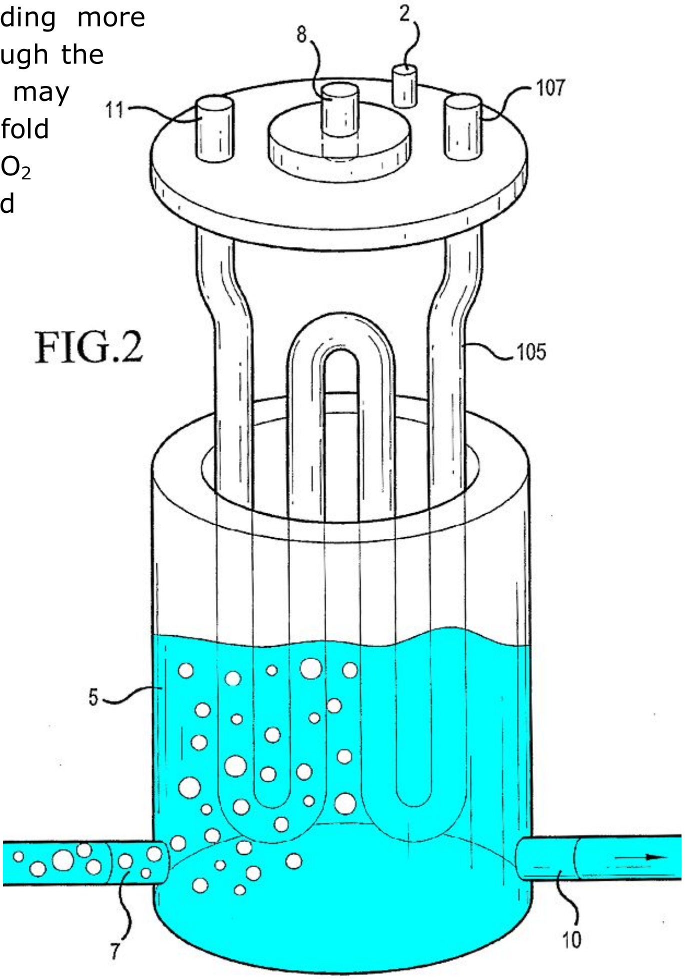

FIG.2

pumped from the reservoir 5 and through the fuel cell 12 will continually bring fresh electrolyte to be supplied to the fuel cell 12 for conversion of the water within the electrolytic solution to $H_2H_2O_2$ gas. A conduit 10 located at the bottom of the reservoir 5 permits the electrolytic to be pumped into the cell 12.

A second conduit 7 will exit at the top of the fuel cell 12 to permit electrolyte as well as $H_2H_2O_2$ gas created in the fuel cell 12 to enter the reservoir 5 from a second location at the bottom of the reservoir 5. The electrolyte will continue to circulate through the system while the $H_2H_2O_2$ gas rises through the electrolytic solution in the reservoir 5 and escapes into a conduit 8 at the top of the reservoir 5. The $H_2H_2O_2$ gas will be supplied to a bubbler 13.

As illustrated in FIG. 2, the reservoir 5 will also cool the electrolyte by means of having a heat conductive cavity or tubing that forms a heat exchanger 105 mounted within the reservoir 5. This heat exchanger 105 will draw heat out of the electrolyte in the reservoir 5 thereby cooling the reservoir 5 while simultaneously adding heat to the liquid from the vessel 106. An inlet 107 at the top of the reservoir 5 permits a cool liquid to be pumped from the vessel 106 using the pump 108 to supply the cool liquid from the conduit 9 to the heat exchanger 105. The heat exchanger 105 will have fluid from the vessel 106 being pumped through the heat exchanger 105 by the pump 108 to thereby cool the electrolytic solution while heating the liquid from the vessel 106. The liquid in the heat exchanger 105 will then exit from a conduit 11 and will flow to either the cooling system of the fuel cell 12 where the liquid will also pass through another heat exchanger or into a warm liquid return manifold 20 where the heated liquid will be sent back to the vessel 106.

The reservoir 5 will consist of a tank that will hold the electrolytic solution and capture the $H_2H_2O_2$ gas as it is created by the water in the fuel cell 12. The tank 5 will consist of two main parts. The lower section is a container that will hold the electrolytic solution and will have two points of entry at the bottom. One will allow fresh cooled electrolyte to be pumped out through the conduit 10 and into the fuel cell 12. The second will allow electrolyte and $H_2H_2O_2$ gas from the fuel cell to travel back into the reservoir 5 by way of the conduit 7.

The top section of the reservoir 5 will make a water tight seal when it is bolted, sealed or otherwise secured to the lower section. It will have four points of entry. At the highest point is the exit that will allow the $H_2H_2O_2$ gas to escape the reservoir 5 by way of the conduit 8 and continue through the system. Another entry point will allow distilled water from the distilled water tank 1 to be pumped into the reservoir 5 by way of the conduit 2. This will be controlled by a pump 101 to maintain optimum conductivity of the electrolyte. The final two entry points will be connected together internally to a heat exchanger 105 that will be submerged in the electrolyte when the top and bottom sections of the reservoir 5 are joined. The pathway in the heat exchanger 105 will have liquid from the vessel 106 that is to be heated forced through the heat exchanger 105 by the pump 108. One side will be an inlet 107 for the cool liquid from the vessel 106 and the other side will be an outlet 11. The inlet side 107 will be fed from a cool liquid manifold that will draw cool liquid from the main piping and force the liquid through the heat conductive piping of the heat exchanger 105. As illustrated in FIG. 1, the liquid may exit the other outlet 11 and be connected to the warm liquid conduit 20 for being returned to the vessel 106. This system will cool the electrolyte while heating the liquid from the vessel 106. As illustrated in FIG. 9, the other outlet 11 may be connected to the cooling liquid for the fuel cell 12 and then connected to the outlet conduit 118 and thereafter to the warm liquid conduit 20 to be returned to the reservoir 106. As illustrated in FIG. 10, the other outlet 11 may be connected to the heat sink 221 of the rectifier bridge 21 and then returned to the warm liquid conduit 20 which will lead back to the vessel 106.

As illustrated in FIG. 3, the warm liquid conduit 20 may include two exit openings 402 and 406. If the heating system 100 is operatively connected to an existing flow passage from a vessel 106 that is inline, the exit opening 406 is closed by the cap 408. If the heating system 100 is operatively connected to an existing flow passage from a vessel 106 that requires a parallel return, the exit opening 402 is closed by the cap 404.

FIG.5

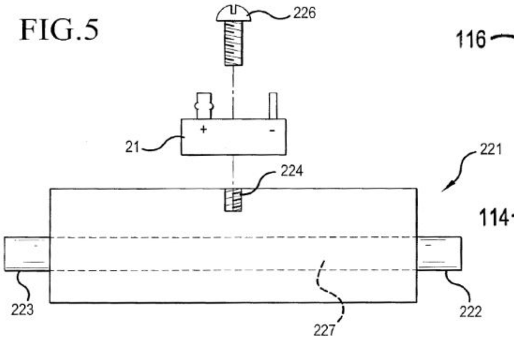

FIG.6

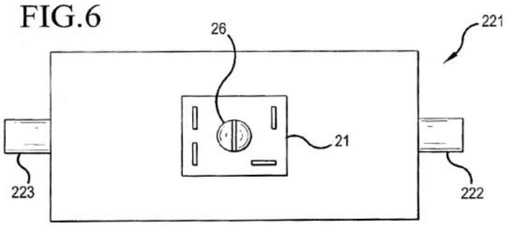

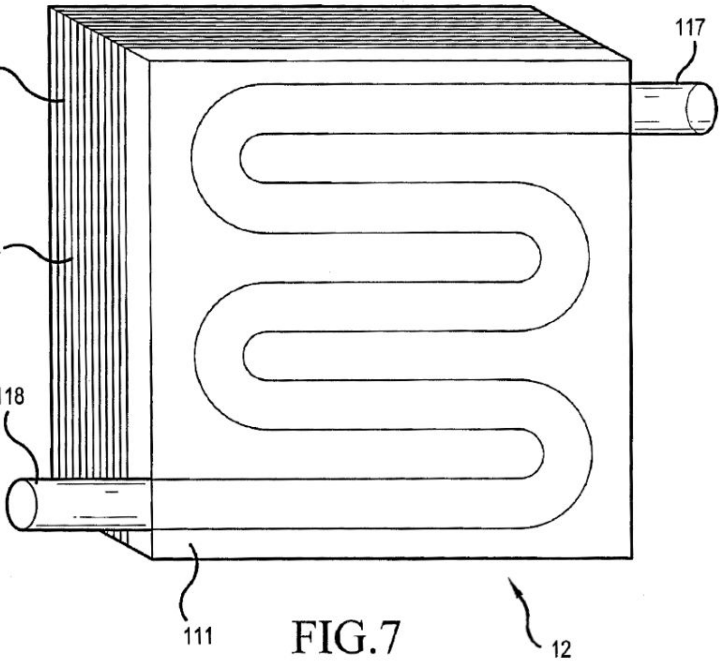

FIG.7

As illustrated in FIGS. 3, 5 and 6, a rectifier bridge 21 is used to convert AC voltage to DC voltage. Such a rectifier bridge 21 creates a significant amount of heat and is normally affixed to a heat sink 221 to dissipate the heat. The rectifier bridge 21 will be mounted to an insulated heat sink 221 which will be cooled by liquid from the vessel 106 to be heated. The insulated heat sink 221 will draw cool liquid from the cool liquid manifold 9 and circulate the liquid through the insulated heat sink 221 to cool the rectifier bridge 21. Thereafter, the liquid is sent back as warm liquid through the warm liquid conduit 20. This will add two advantages. The first advantage is that the liquid stream will cool the rectifier bridge 21 and the heat sink 221. The second advantage is that the liquid stream will heat the liquid in the stream that is thereafter supplied back to the vessel 106.

The rectifier bridge 21 will be used to convert AC voltage to DC. The cooler 221 includes an inlet 222 on one side for the cool liquid to enter the cooler 221. The liquid will be forced into the inlet 222 from the liquid conduit 117. The liquid will travel through the cooler 221 via a channel 227 in the cooler 221. The liquid will then pass out through the outlet 223 where the liquid will return the warm liquid to the vessel 106 via the warm liquid conduit

20. The rectifier bridge 21 will be attached to the cooler 221 by a fastener 226 and will screw directly into the cooler 221.

As illustrated in FIGS. 7 and 8, the fuel cell 12 uses a series of positively and negatively charged stainless steel plates 114A to 114G to create a field where electrolysis will take place. When the fuel cell 12 is energized and the solution is passed through the fuel cell 12 the water in the fuel cell creates oxyhydrogen or $H_2H_2O_2$. The $H_2H_2O_2$ gas is then forced back through the reservoir 5 via the conduit 7 with the electrolyte. The electrolyte will refill the reservoir 5 and the $H_2H_2O_2$ gas will rise to the top of the reservoir 5 where under its own pressure the $H_2H_2O_2$ gas will exit through a conduit 8 at the top of the reservoir 5. The $H_2H_2O_2$ fuel will then be supplied into the bubbler 13. The fuel cell 7 will be kept at a cool operating temperature by circulating cool liquid from the vessel 106 throughout the walls of the fuel cell through the inlet conduit 117 and out the outlet conduit 118. The cool liquid may come from the reservoir 5 or the cool liquid manifold 9.

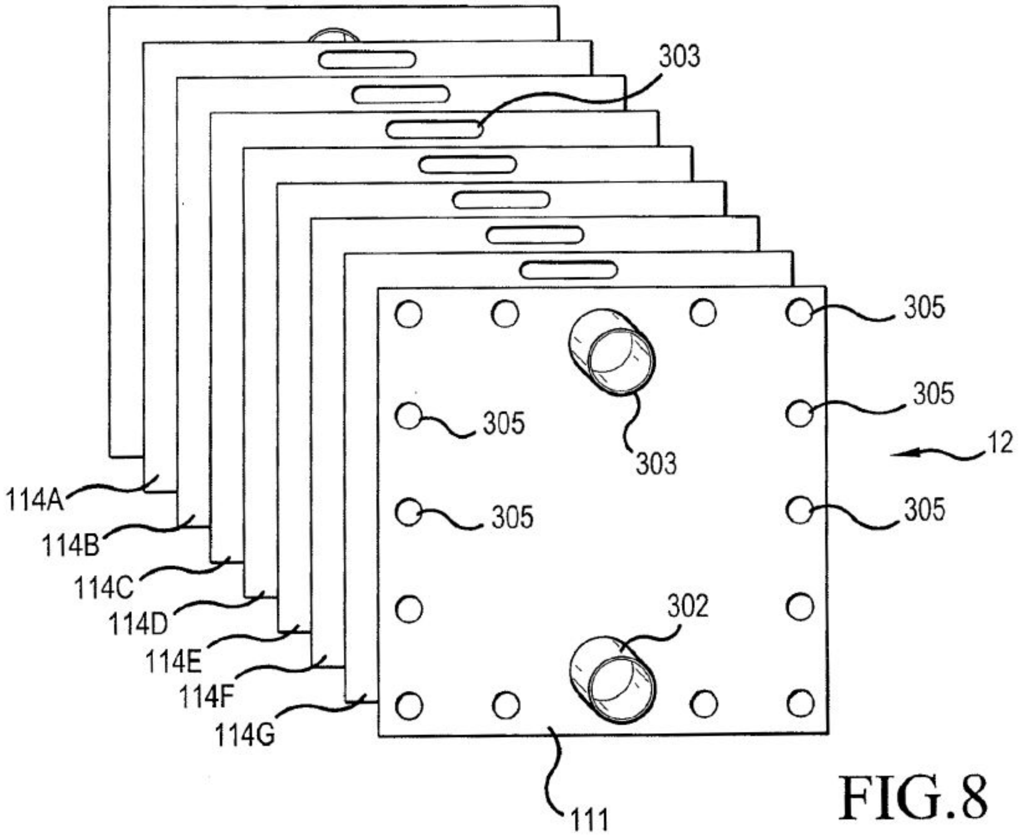

FIG.8

As illustrated in FIG. 1, the bubbler 13 is a vessel which is filled with liquid and includes an entry point 213 for gas at the bottom and an exit point 214 for gas at the top. The main function of the bubbler 13 is to create a non-flammable buffer for the gas to travel through. Thus, if there is a failure at a torch 17 wherein the flame is inside the torch 17 and a blowback condition exists with the flames traveling back from the tip of the torch 17, no flame can enter the reservoir 5 or fuel cell 12 area of the heating system 100. This limits the possible damage to the components and increases safety. After the $H_2H_2O_2$ gas has made its way through the fuel cell 12 and the reservoir 5, the $H_2H_2O_2$ gas will pass through the bubbler 13. The gas will enter the liquid filled bubbler 13 from the bottom and rise to the top in the form of bubbles. The gas will collect at the top of the bubbler 13 and will be pushed by its own expanding pressure through a conduit 216 into a dryer 14.

The liquid in the bubbler 13 will act as a filter to keep impurities out of the fuel supply.

The dryer 14 consists of a multiple cavity device with several porous filters and a drain at the bottom. The drain at the bottom is of a petcock type for allowing moisture to be drained from the dryer 14. The dryer 14 is designed to eliminate most of the moisture which may be in the gas in order to create the hottest flame possible from the $H_2H_2O_2$. The moisture may be created by steam from the fuel cell 12. However, the use of the reservoir 5 and fuel cell 12 cooling system may negate the moisture. In addition, moisture may be created from liquid picked up in the bubbler 13. The $H_2H_2O_2$ gas will enter from a conduit 314 near the bottom of the dryer 14 and push through the varied chambers by its own expanding force and exit through a conduit 316 at the top of the dryer 14 and then will be supplied to a spark arrestor 15.

FIG.9

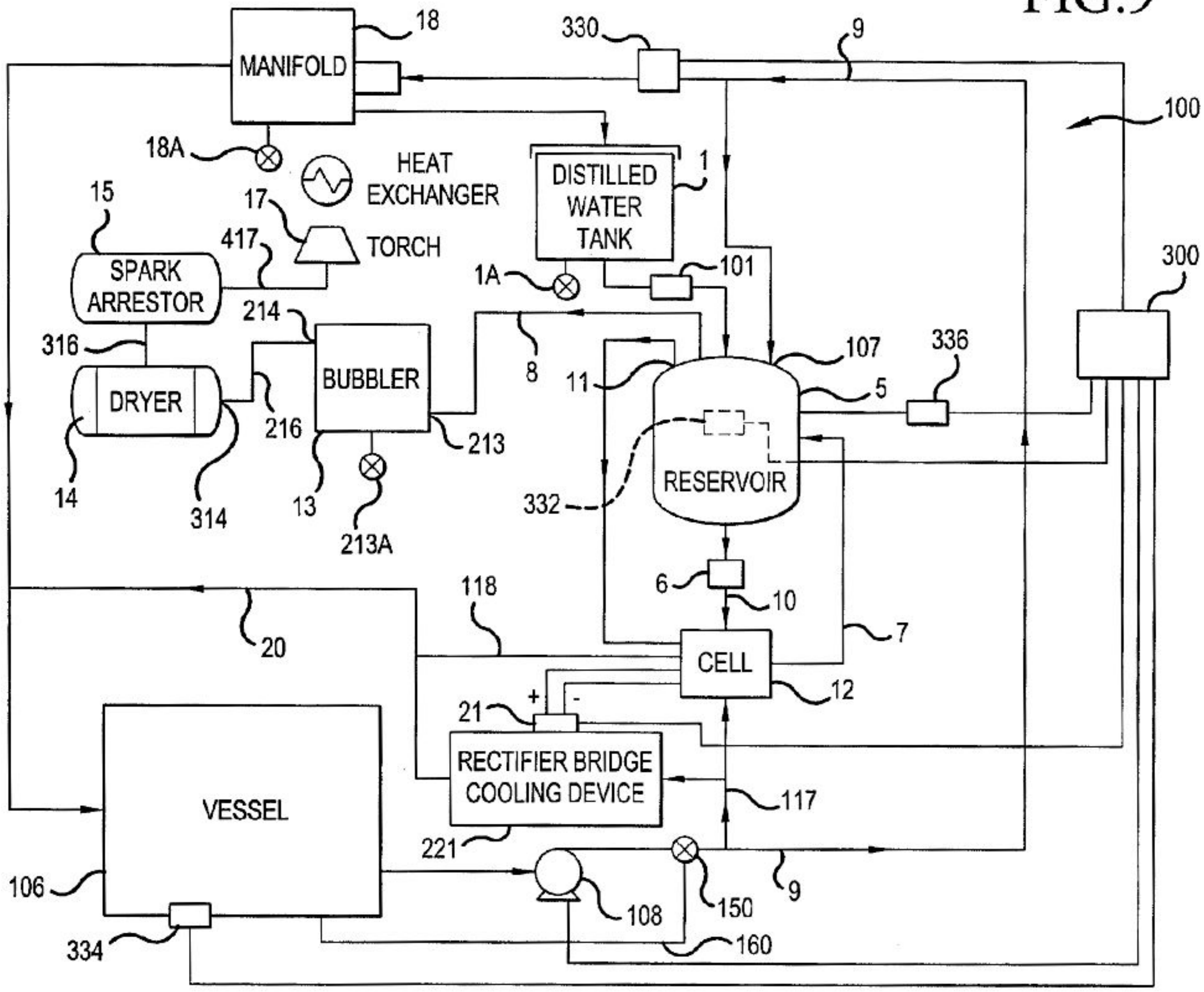

The dryer includes a mechanical float switch, an electric sensor or a magnetic float switch for determining if water in the moisture collecting chamber is above desired levels.

The spark arrestor 15 is a device for accepting the $H_2H_2O_2$ gas from the dryer 14 and creating a check valve for the flame. If a blowback condition exists and flames travel back from the tip of the torch 17, the spark arrestor 15 will smother the flame and stop the flame from backing up into the dryer 14. The spark arrestor 15 has an opening on one side that will accept a conduit from the dryer 14 that allows the $H_2H_2O_2$ gas to be pushed through the device by its own expanding force. The $H_2H_2O_2$ gas exits through a conduit 417 to supply the gas to the torch manifold 16 and the torch 17.

The spark arrestor 15 includes a mechanical and/or electrical sensor for determining and indicating when the spark arrestor 15 is nearing the end of its useful life and for determining when the spark arrestor 15 is past the end of its useful life for terminating power to the fuel cell 12.

FIG.10

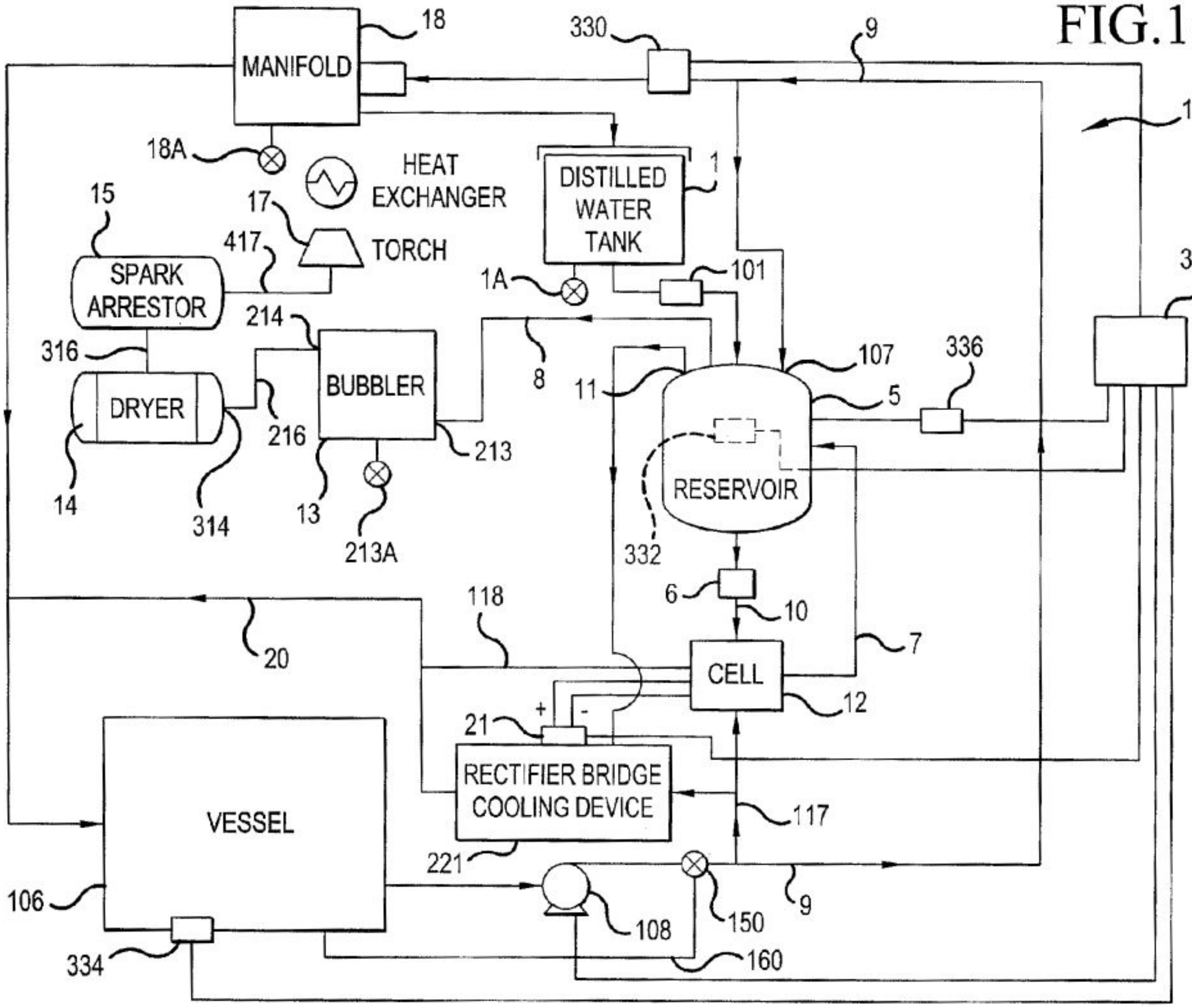

The torch 17 shall have a conical point where the flame will be focused. There can be multiple arrays of torch points, or a single point in any application, depending on the heat exchanger or manifold used.

The torch tip is fitted closely into the manifold 18 and heat exchanger 19 to best transfer heat from the tip to the heat exchanger 19 and then to the liquid to be heated. The torch tip includes an integrated igniter to ignite the torch 17.

The $H_2H_2O_2$ gas travels from the spark arrestor 15 into the torch manifold 16 that will allow the gas to be directed to the torch 17 or multiple torches to be ignited by an electrical spark. The number of torches 17 and corresponding runners in the torch manifold 16 will be determined by the size of the unit and the amount of $H_2H_2O_2$ gas the system is sized to create. There will be no storage or pressurization of the $H_2H_2O_2$ gas. The torch manifold 16 will capture and channel any distilled water created by the ignition of $H_2H_2O_2$ gas as waste byproduct to send the distilled water back to the distilled water tank 1 by way of the conduit 4. This channel will also capture condensation created by the differing temperatures from the cool liquid running through the main heater manifold 18 and the heat created by the torches 17 and the heat exchanger 19 mounted within the main heater manifold 18. This captured distilled water will be pumped into the distilled water tank 1 through the conduit 4.

In one embodiment, the torches 17 may have a male thread on one side wherein the torches 17 may be screwed into the torch manifold 16 which will have a female thread. The torches 17 will fit into an aperture in the heat exchanger 19. The torch manifold 16 with the torches 17 installed is then bolted or otherwise attached to the main heat manifold 18. The $H_2H_2O_2$ fuel will be ignited in the torches 17 to heat the main heat exchanger 18 thereby heating the liquid supplied from the vessel 106. The combined heat exchanger 19 and complete torch manifold 16 will be bolted or otherwise attached to the main heater manifold 18.

The main heat exchanger 19 may be made with a hollow core. Around the outside of the hollow core are additional discs which will increase the contact area of the heat exchanger with the liquid supplied from the vessel 106. The torches 17 will ignite the $H_2H_2O_2$ gas where the gas will burn at a high temperature without the need of oxygen from the atmosphere. The core and the discs will heat the liquid as the liquid passes within the main heater manifold 18.

As illustrated in FIGS. 11 and 12, in one embodiment of the present invention three torches 17A, 17B and 17C are mounted on a torch manifold 16. The three torches 17A, 17B and 17C are fitted within apertures 19A, 19B and 19C in the main heat exchanger 19. Thus, all of the heat from the torches 17A, 17B and 17C is used in view of the fact that no external source of oxygen is necessary. The $H_2H_2O_2$ gas provides the necessary oxygen for burning the hydrogen. A collection ring 16A is formed on a surface of the torch manifold 16 for collecting distilled water that is formed as a by-product of the combustion of the $H_2H_2O_2$ gas. The distilled water in the collection ring 16A will be fed to the conduit 4 for return to the distilled water tank 1.

FIG.11

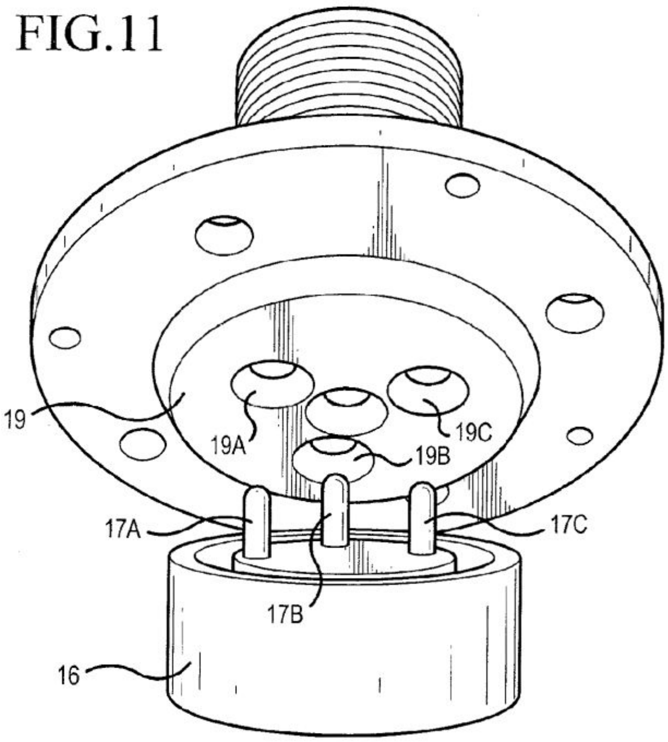

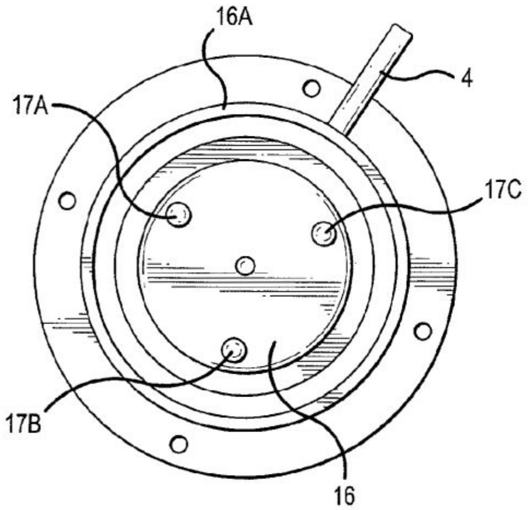

FIG.12

In a conventional heater using natural gas or liquid propane the burner would be displaced from the heat exchanger by a predetermined distance to permit a supply of oxygen to flow to the torch for burning the natural gas or liquid propane. A conventional heater would result in a loss of some of the heat in view of this arrangement.

The main heat manifold 18 will be attached to the main heat exchanger 19 by bolts or other means to secure the main heat manifold 18 and the main heat exchanger 19 with a water tight seal. The design places the main heat exchanger 19 into the main stream of liquid from the vessel 106 as the liquid passes through the main heat manifold 18. The liquid moves over the heat exchanger 19 heating the liquid as the liquid passes. The heated liquid is returned to the vessel 106. The main heat manifold 18 is designed with two returns but only one may be used at a time. The main heat manifold 18 will be supplied with a cap 404 or 408 that will close off one of the returns. This allows greater flexibility when plumbing the main heat manifold 18 into a pre-existing system. One choice is an inlet and outlet pipe on the same side 402 or 406 as is currently used on most swimming pool heaters. The other choice is a straight through configuration where the inlet is on one side and the outlet is on the opposite side 402 and 406.

The heat exchanger 19 and manifold 18 are the main transfer points of the thermal energy into the liquid being heated. The manifold 18 is an outer cavity with an inlet for fresh liquid to be heated, and an outlet for heated liquid to exit, and lastly an opening to insert and seal the heat exchanger 19. The heat exchanger 19 will be inserted directly into the flow of the liquid. When the torch 17 is fired it will cause the heat exchanger 19 to warm, thus warming the liquid passing around the heat exchanger 19.

The manifold 18 includes the heat exchanger 19 which will accept directly the flame from the torch tip. The heat exchanger 19 has an alternating protrusion pattern across a width of the heat exchanger 19 which, in one embodiment of the invention, will protrude roughly one half of an inch (1.27 cm) away from one side the heat exchanger 19. These protrusions from the heat exchanger 19 will alternate from side to side of the heat exchanger 19 and, in one embodiment of the invention, shall be spaced one quarter of an inch (0.635 cm) away from each other longwise so the liquid is forced into multiple contact points with the heat exchanger 19.

The protrusions from the heat exchanger 19 are in a spiral pattern to allow the liquid to swirl inside the heat exchanger 19 so the liquid comes into contact with as much of the heat exchanger 19 as possible.

The protrusions from the heat exchanger 19 are in a reverse curve pattern causing the liquid to double back on itself so the liquid is subjected to more time in the manifold 18 thereby gaining more heat.

The heat exchanger 19 shall be removable from the manifold 18 for easy maintenance. In addition, the heat exchanger 19 will have a bypass that will allow a predetermined amount of liquid to bypass the heat exchanger 19 by having differing size baffles. The heat exchanger 19 may have a bypass that will allow a predetermined amount of liquid to bypass the heat exchanger by having differing size pipe reducers.

The heat exchanger 19 may have a bypass that will allow an adjustable amount of liquid to bypass the heat exchanger 19 with the use of a scissor valve, ball valve, diverter valve, or butterfly valve. In another embodiment, the heat exchanger 19 may have a bypass that will allow a permanently fixed amount of liquid to bypass the heat exchanger 19. The heat exchanger 19 and manifold 18 can be constructed as one integral component to permit easy replacement of the whole unit.

In addition, when the heat exchanger is not being used, the heat exchanger 19 and manifold 18 may be removed from the system to extend the life of the heat exchanger 19. As illustrated in FIGS. 1, 9 and 10, a bypass valve 150 can be closed to permit the pump 108 and a filter system to be connected directly to the vessel 106 without circulating any liquid through the heating system 100.

Further, where winterization of the heating system 100 is required, a drain valve 1A, operatively connected to the distilled water tank 1, a drain valve 18A, operatively connected to the main heat manifold 18 and a drain valve 213A, operatively connected to the bubbler 13, are provided to drain liquid from the system.

The fuel cell 12 will take electrolyte from the reservoir 5 and pass the electrolyte over a series of positively and negatively charged plates 114A to 114G which have a predetermined amount of space between the plates 114A to 114G. In the space between the plates 114A to 114G an electrical field is provided where the electrolysis will take place. The result will be a release of $H_2H_2O_2$ gas which will be collected as fuel for the heating system.

The fuel cell 12 is commercially available and can be sized differently to generate the amount of $H_2H_2O_2$ required. There are two outside polymer plates 111 which have an entry hole 302 near the bottom of the fuel cell 12 to allow the electrolyte to be pumped into the fuel cell 12. Between the two polymer plates 111 the plurality of stainless steel plates 114A to 114G are spaced relative to each other. The stainless steel plates 114A to 114G also include the same holes 302 as the polymer plates 111 to allow ingress and egress of the electrolytic fluid. Between every plate 114A to 114G there is a gasket 116 which will create space between the plates 114A to 114G as well as make the unit water tight. The entire system is held together by a plurality of fasteners 305 that run through the plates 114A to 114G pulling the plates 114A to 114G together to provide a water tight seal.

The outside polymer plates 111 will have a cavity that will allow liquid from either the cool liquid conduit 117 to be pumped through the cavity cooling the fuel cell 12 as well as heating the liquid. As illustrated in FIG. 7, an inlet 117 is provided where the cool liquid will enter. An outlet 118 is provided where the warm liquid will exit. The cavity will be on both sides of the fuel cell and will return the liquid back to the warm liquid conduit 20 and then back to the vessel 106.

An electrical source is provided to cause electrolysis in the water in the electrolytic solution that results in the creation of hydrogen and oxygen, $H_2H_2O_2$. The source of electricity may be from a solar panel, an electrical line of current, a DC power supply, or electricity created by a hydroelectric generator powered by a circulation pump of a vessel. A rechargeable battery or disposable battery may also be used separately or in conjunction with the solar panel, the electrical line of current, the DC power supply or the electricity created by the hydroelectric generator.

When DC voltage is applied to the fuel cell 12, the water in the electrolytic solution disposed between the properly spaced positively and negatively charged plates 114A to 114G creates $H_2H_2O_2$ in the form of a gas. As the water in the electrolytic solution passes through the space between the negative and positively charged plates 114A to 114G that create an electrical field the electrolysis will take place. The electrolysis creates the hydrogen and oxygen, $H_2H_2O_2$, mixture. The fuel cell 12 may be of a wet or dry type.

The electrical source can originate from either 220 volts AC or 110 volts AC as provided from a typical power grid. The current is converted to 6, 12, 24, 48, 60, 72, 84, 96, 108 or 120 volts by use of transformers and then rectified to a DC current. A 6, 12, 24, 48, 60, 72, 84, 96, 108, 120 volt DC deep cell battery or any suitable voltage DC battery may be used. The DC deep cell battery may be recharged by a solar vocative panel. In the alternative, the 6, 12, 24, 48, 60, 72, 84, 96, 108, 120 volt may be supplied by a single photo vocative panel or by an array of photo vocative panels. Further, the 6, 12, 24, 48, 60, 72, 84, 96, 108, 120 volt DC deep cell battery or any suitable voltage DC battery may be recharged by a circuit that is connected to an electrical line of current.

As an example, the rectifier bridge 21 may be operated at 4 to 15 amps at 100 to 130 volts DC to produce approximately 5 to 10 liters of $H_2H_2O_2$ gas per minute for supplying a substantial quantity of $H_2H_2O_2$ gas to the torch 17 for heating the heat exchanger 19. The present invention produces a substantial quantity of heat as compared to a conventional conductive heating unit. The use of 4 to 15 amps provides a relatively low energy source with a substantially high output of $H_2H_2O_2$ gas.

Any battery array either rechargeable or disposable that can be configured in a 6, 12 or 24 volt configuration may be used as the electrical source.

In addition, a power source of 220 volts AC or 110 volts AC of power may be operatively connected to a triad dimmer, reduced to 55 volts AC and then rectified to DC current. Further a power source of 110 volts AC of power may be operatively connected to a rectifier DC to a 52 plate fuel cell. In one embodiment 220 volts AC of power can be transformed to 110 volts AC and then rectified to DC power which is then applied to a 52 plate fuel cell.

An electrical current that is provided from any hydroelectric device that could be connected to the liquid circulation system of the vessel to create electricity may be used to power the fuel cell.

The electrical control system shall monitor the amperage that is being delivered to the fuel cell. If the amperage being drawn to the cell reaches a level above that for which it is rated, the electrical system will automatically cut off power to the fuel cell.

The cell circuitry includes a fuse or circuit breaker of a specified rating for the cell and power supply that shall blow if there is a rise in the amperage above that predetermined level.

The fuel cell 12 includes a mechanical pressure sensor that will trigger a shutdown of the system if backpressure of an undesirable level exists in the fuel cell 12. In the alternative, the fuel cell 12 may include an electrical pressure sensor that will trigger a shutdown of the system if backpressure of an undesirable level exists in the fuel cell 12.

The fuel cell 12 includes an emergency blowout valve which will vent the hydrogen from the fuel cell if a pressure above desired levels inside the fuel cell is reached.

The fuel cell 12 includes a mechanical safety which will alert and cut power to the fuel cell 12 if the electrolytic liquid is low in the fuel cell 12. In the alternative, the fuel cell 12 may include an electrical safety which will alert and cut power to the fuel cell 12 if the electrolytic liquid is low in the fuel cell 12.

The fuel cell includes a mechanical or electrical safety which will indicate visually to the operator that the electrolytic solution is low.

The fuel cell includes an electronic pulse modulation to control the overheating of the fuel cell if the overheating conditions exist.

The fuel cell includes a provision that if the ambient air temperature rises above a predetermined level, power to the fuel cell will be cut off.

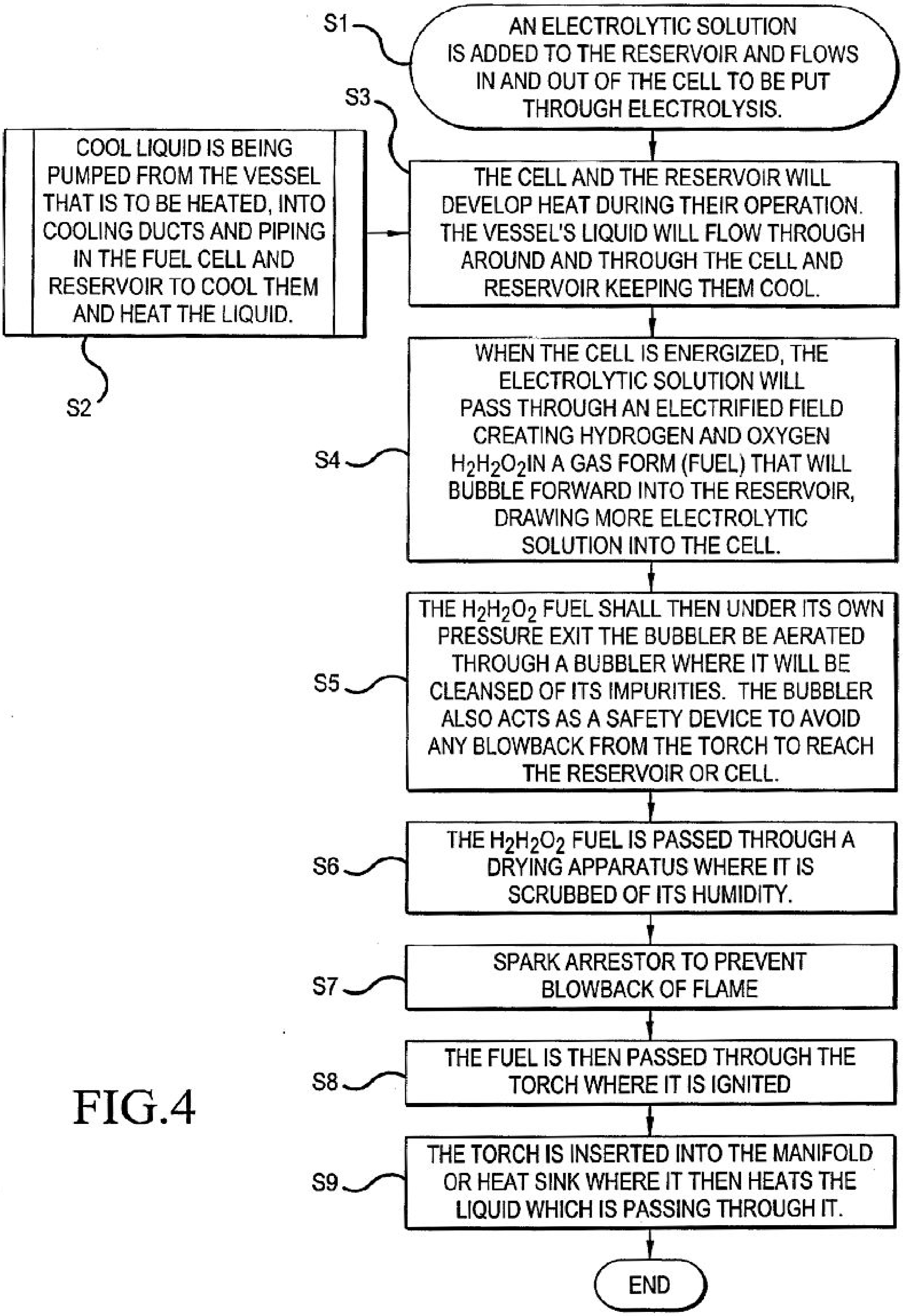

AN ELECTROLYTIC SOLUTION IS ADDED TO THE RESERVOIR AND FLOWS IN AND OUT OF THE CELL TO BE PUT THROUGH ELECTROLYSIS.

COOL LIQUID IS BEING PUMPED FROM THE VESSEL THAT IS TO BE HEATED, INTO COOLING DUCTS AND PIPING IN THE FUEL CELL AND RESERVOIR TO COOL THEM AND HEAT THE LIQUID.

THE CELL AND THE RESERVOIR WILL DEVELOP HEAT DURING THEIR OPERATION. THE VESSEL'S LIQUID WILL FLOW THROUGH AROUND AND THROUGH THE CELL AND RESERVOIR KEEPING THEM COOL.

WHEN THE CELL IS ENERGIZED, THE ELECTROLYTIC SOLUTION WILL PASS THROUGH AN ELECTRIFIED FIELD CREATING HYDROGEN AND OXYGEN $H_2H_2O_2$IN A GAS FORM (FUEL) THAT WILL BUBBLE FORWARD INTO THE RESERVOIR, DRAWING MORE ELECTROLYTIC SOLUTION INTO THE CELL.

THE $H_2H_2O_2$ FUEL SHALL THEN UNDER ITS OWN PRESSURE EXIT THE BUBBLER BE AERATED THROUGH A BUBBLER WHERE IT WILL BE CLEANSED OF ITS IMPURITIES. THE BUBBLER ALSO ACTS AS A SAFETY DEVICE TO AVOID ANY BLOWBACK FROM THE TORCH TO REACH THE RESERVOIR OR CELL.

THE $H_2H_2O_2$ FUEL IS PASSED THROUGH A DRYING APPARATUS WHERE IT IS SCRUBBED OF ITS HUMIDITY.

SPARK ARRESTOR TO PREVENT BLOWBACK OF FLAME

THE FUEL IS THEN PASSED THROUGH THE TORCH WHERE IT IS IGNITED

THE TORCH IS INSERTED INTO THE MANIFOLD OR HEAT SINK WHERE IT THEN HEATS THE LIQUID WHICH IS PASSING THROUGH IT.

END

FIG.4

The reservoir 5 is constructed with pipes or veins similar to a radiator. The pipes extend into the reservoir 5 and come into contact with the electrolytic solution in the reservoir 5. Liquid from the vessel 106 being heated will be passed through the pipes using the circulating pump 108 of the vessel 106. The cool liquid passing through the pipes will wick away heat from the electrolytic solution, while adding heat to the liquid going back to the vessel 106.

As illustrated in FIG. 4, step S1 takes an electrolytic solution and adds the solution to a reservoir 5. Step S2 is the cool liquid that is pumped from a vessel to be heated into the heating system. Step S3 utilizes the cool liquid from the reservoir for cooling the fuel cell 12 and the reservoir 5. Step S4 forms $H_2H_2O_2$ gas and sends the gas to the bubbler 13. Step S5 the $H_2H_2O_2$ gas is cleaned. Step S6 the $H_2H_2O_2$ gas is sent to a dryer. Step S7 the $H_2H_2O_2$ gas passes through a spark arrestor 15. In Step S8 the $H_2H_2O_2$ gas is passed through the torch 17 and ignited. Step S9 the torch 17 heats the heat exchanger 19 disposed within the manifold 18 for heating the liquid from the vessel 106.

The present invention does not store or pressurize the $H_2H_2O_2$ gas. The heating system 100 is sized for a particular vessel 106 to permit only a sufficient amount of $H_2H_2O_2$ gas which will be consumed by the torch 17. The $H_2H_2O_2$ gas is only generated based on the need and the size of the system. In addition, no blow back of the flame from the torch 17 back to the reservoir 5 will occur in view of the arrangement of the spark arrestor 15, the dryer 14 and the bubbler 13.

In addition, a control system 300 is used to monitor the flow of fluid in the conduit 9 by use of a flow switch 330 to turn off the pump 108 and the rectifier bridge 21 and all electrical equipment if the flow of fluid in the conduit 9 is below a predetermined volume.

The control system is operatively connected to a thermostatic 334 to turn off the pump 108 and the rectifier bridge 21 and all electrical equipment when the liquid within the vessel 106 is heated to a desired temperature.

Further, the control system 300 will monitor the level of electrolytic solution in the reservoir 5 by way of a float switch 332 or a switch operating on a sight panel in the reservoir 5 to refill the reservoir 5 with additional distilled water if the level of electrolytic solution is below a predetermined level.

FIG. 13 sets forth a flow chart of the steps in the operation of a mechanical floating switch 332 for controlling the conductivity of the electrolyte in the reservoir 5. In Step 101[160] the control starts. Step 102 the reservoir 5 is filled with an electrolytic solution. Step 103 a floating switch 332 is positioned within the reservoir 5 for monitoring the level of electrolytic solution from NO to NC. Step 104 if the float switch 332 is positioned in the NC position, a controller 300 will turn on the pump 101 to pump a predetermined amount of distilled water into the reservoir 5. Step 105 if the floating switch 332 is returned to the NO state, the pump 101 is not activated.

---

[160] In the drawing, step 101 is marked S101 and so forth. If you're a researcher of such HHO heating systems, following these steps closely would teach you how the system should be controlled, both in terms of functionality and safety of operation.

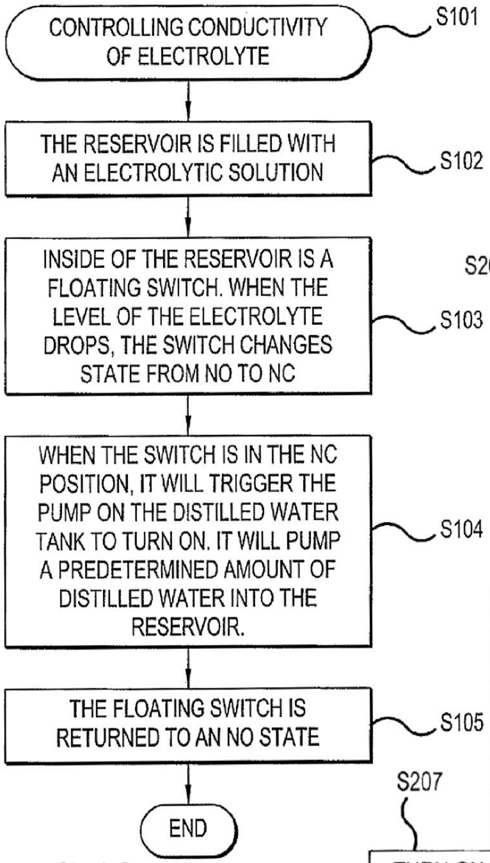

FIG.13

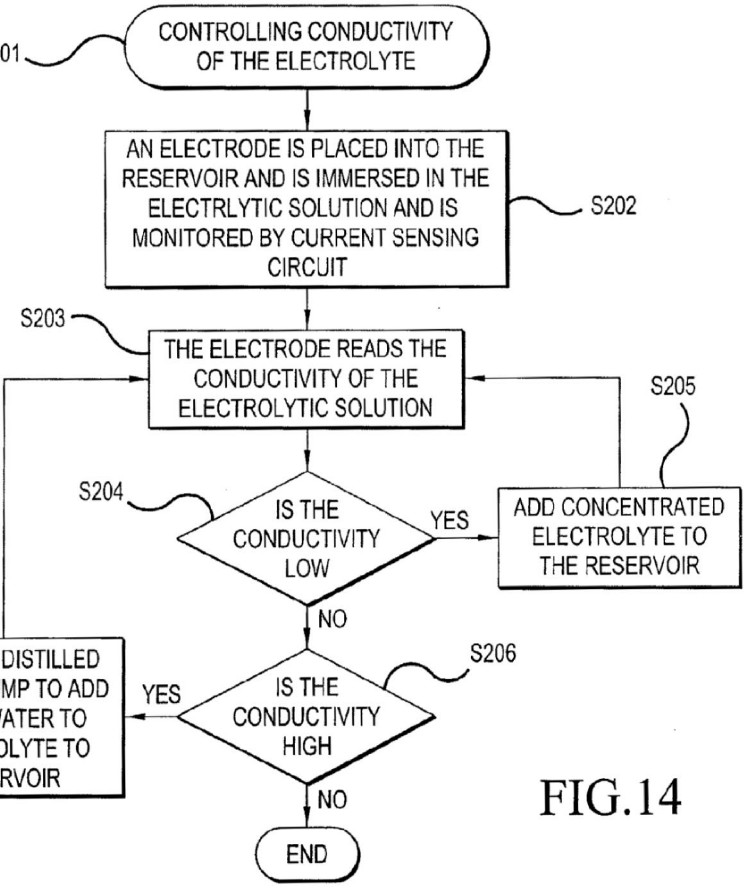

FIG.14

FIG. 14 is a flow chart setting forth the steps in the operation of an electrical control of the conductivity of the electrolyte in the reservoir 5. In this embodiment, the reservoir 5 would include an electrode immersed in the electrolytic solution in the reservoir wherein a current sensing circuit is monitored to determine the conductivity of the electrolytic solution.

In Step 201 the control starts. Step 202 an electrode is placed in the reservoir 5 and is immersed in the electrolytic solution and is monitored by a current sensing circuit. Step 203 the electrode reads the conductivity of the electrolytic solution. Step 204 if the conductivity is low a signal is sent to Step 205 to add concentrated electrolyte to the reservoir 5. Step 206 determines if the conductivity is high. Step 207 turns on the pump 101 to add additional distilled water to the reservoir 5.

Further, the control system 300 will monitor the pressure within the reservoir 5 by way of a pressure switch 336 to turn off the pump 108 and the rectifier bridge 21 and all electrical equipment if the pressure rises above a predetermined level.

The use of low amperage in the range of 4 to 15 amps while producing the required amount of $H_2H_2O_2$ gas that is not stored within the heating system 100 provides a safe heating system 100 for industrial use or normal home use.

As illustrated in FIG. 3, an access door 400 with a handle 402 may be used to gain access to the components of the heating system to facilitate servicing and winterizing of the components.

FIGS. 15-18 illustrate an embodiment of the invention wherein the reservoir 5 and the fuel cell 12, as illustrated in FIG. 1, have been combined into a single, integrated reservoir and fuel cell assembly 500. By constructing the integrated reservoir and fuel cell 501 as a single unit, the cost of manufacturing the unit is decreased, improved cooling of the reservoir/fuel cell occurs and the back pressure on the fluid circulation system is minimized. Further, the footprint of the combined reservoir fuel cell is decreased to provide a reduction in the required space for the unit.

The embodiment illustrated in FIGS. 15-18 also eliminates the requirement for a pump to circulate the electrolytic solution between the reservoir and fuel cell. Safety is improved by reducing problems that may develop if a leak or rupture in the fuel cell or reservoir occurs. Further, as illustrated in FIG. 17, a hydrogen sensor 720 is provided to trigger a safety shutdown of the system.

The reservoir and fuel cell assembly 500 are combined into a single unit to also enable a savings of space inside an enclosure for the heating system. This is accomplished by placing the fuel cell 502 into a reservoir bottom 506, immersed in the electrolytic solution, rather than having a separate fuel cell 12 and a separate reservoir 5 as illustrated in FIG. 1. The reservoir 504 includes two different chambers, the reservoir bottom 506, and a fuel cell cooler 508. The fuel cell cooler 508 will hold the liquid from the vessel 106 that is being heated. The reservoir bottom 506 will hold the water in the electrolytic solution used to produce the $H_2H_2O_2$ fuel.

As illustrated in FIGS. 15 and 16 together with the heating system illustrated in FIGS. 1 and 17, a reservoir top 610 includes a negative terminal connection 610 a and a positive terminal connection 610 b for securing to the positive and negative connections from the rectifier bridge 21 connected to the cooler 221. The reservoir top 610 also includes an $H_2H_2O_2$ vent conduit 610 c for allowing $H_2H_2O_2$ fuel created by the cell 502 to exit and make its way through the system to be burned by the torch 17.

The reservoir top 610 also includes a distilled water entry conduit 610 d for allowing fresh distilled water to enter the fuel cell chamber from the distilled water tank 1. In addition, a plurality of apertures 610 g and 610 h may be formed around the entire reservoir top 610 for receiving a corresponding individual fastener or a plurality of fasteners 514 a, 514 b formed around the top of the reservoir 504 for securing the reservoir top 610 to the reservoir 504.

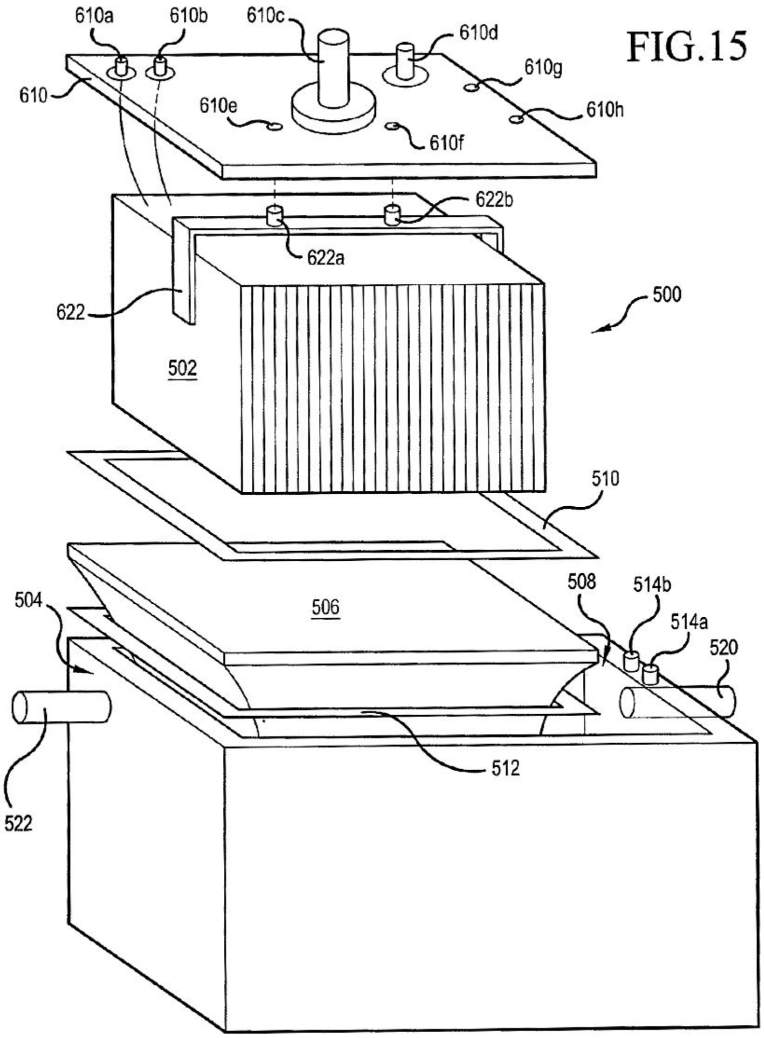

FIG.15

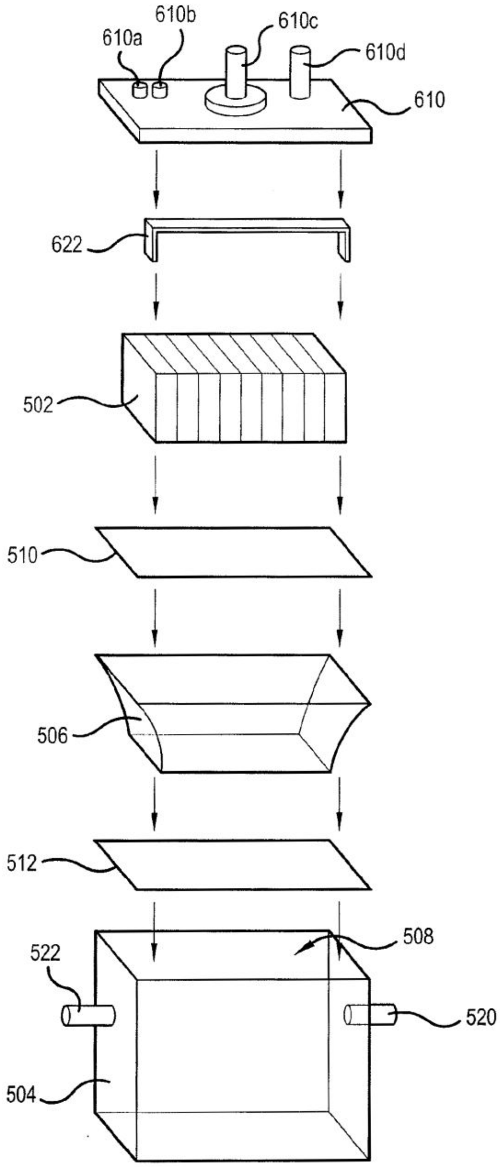

FIG.16

Negative and positively charged plates 502 are suspended from the reservoir top 610 by a cell attachment bracket 622. The cell attachment bracket 622 can either be molded into the reservoir top 610 or attached by fasteners secured within the apertures 622 a, 622 b in the cell attachment bracket 622 and 610e and 610f in the reservoir top 610. When the cell attachment bracket 622 is bolted to the reservoir top 610, the conductive plates 502 will be submerged into the electrolytic solution to a predetermined level in the reservoir bottom 506. The reservoir bottom 506 is made of a heat conductive polymer or metal for holding the electrolytic solution. In this embodiment, a pump is not required to pump liquid through the fuel cell 12 as the $H_2H_2O_2$ bubbles rising from the charged plates 502 will cause convection, thereby circulating the electrolytic solution in the reservoir bottom 506.

The electrolytic solution will come into contact with the reservoir bottom 506, and transfer heat through the reservoir bottom or chamber 506 into the liquid in the fuel cell cooler 508.

The fuel cell cooler 508 will accept the entire aforementioned assembly including the reservoir bottom 506 and the fuel cell 502 into a recess in the top of the fuel cell cooler 508. A gasket 510 creates a seal between the fuel cell cooler 508 and the reservoir bottom 506. Thus, a water and air tight seal is provided that will keep the contents of both respective chambers 506, 508 separate from each other.

The fuel cell cooler 508 includes a channel in the surface for receiving a gasket 512. The gasket 512 is also disposed within a channel around the rim of the reservoir bottom 506. The entire fuel cell assembly 500 is held together by a plurality of fasteners 514a, 514b positioned around the perimeter of the reservoir 504 and received in a plurality of apertures 610g, 610h formed around the perimeter of the reservoir 504.

The fuel cell cooler 508 includes an inlet conduit 520 for enabling a flow of a cooling liquid from the vessel 106 to be pumped by the circulation pump 108 into the fuel cell cooler 508 for cooling the reservoir bottom 506 that includes the conductive plates of the fuel cell 502 disposed therein. The cooling liquid comes into contact with the underside of the reservoir bottom 506 thereby heating the liquid in the fuel cell cooler 508 while cooling the electrolyte in the reservoir bottom 506. The warmed liquid exits the reservoir 504 via an outlet conduit 522.

FIG. 17 is similar to FIG. 3 wherein like elements are referred to with the same reference numerals. Thus, a description thereof is omitted. As illustrated in FIG. 17, a safety catch or drawer 700 is disposed beneath the fuel cell assembly 500. The floor of the main cabinet 710 for positioning the fuel cell assembly 500 includes slots 702 or a grid wherein if a rupture occurs in the fuel cell cooler 508 or the fuel cell assembly 500, the electrolytic solution will flow through the slots 702 and into the safety catch or drawer 700. The safety catch or drawer 700 may include a predetermined amount of a neutralizing agent for returning the electrolytic solution to a suitable pH level rendering it neutral. The solution may then be disposed of safely and the unit can be repaired.

The safety catch or drawer 700 includes a handle 701 for sliding out the safety catch or drawer 700 for easy removal and replacement. The removable safety catch drawer 700 slides into the bottom of the heater cabinet and is located directly under the reservoir and or under the fuel cell itself. The heater cabinet will include the slots 702 or a grid that will allow electrolytic solution from either the fuel cell 502 or the reservoir 504 or the reservoir and fuel cell assembly 500 to flow out of the heater cabinet and down into the drawer 700. The drawer 700 would have a predetermined amount of neutralizing agent in the drawer 700 which when mixed with the electrolyte would bring the ph to a neutral level. This would facilitate an easy cleanup of the electrolyte if the fuel cell 502 and or the reservoir 504 should rupture or leak.

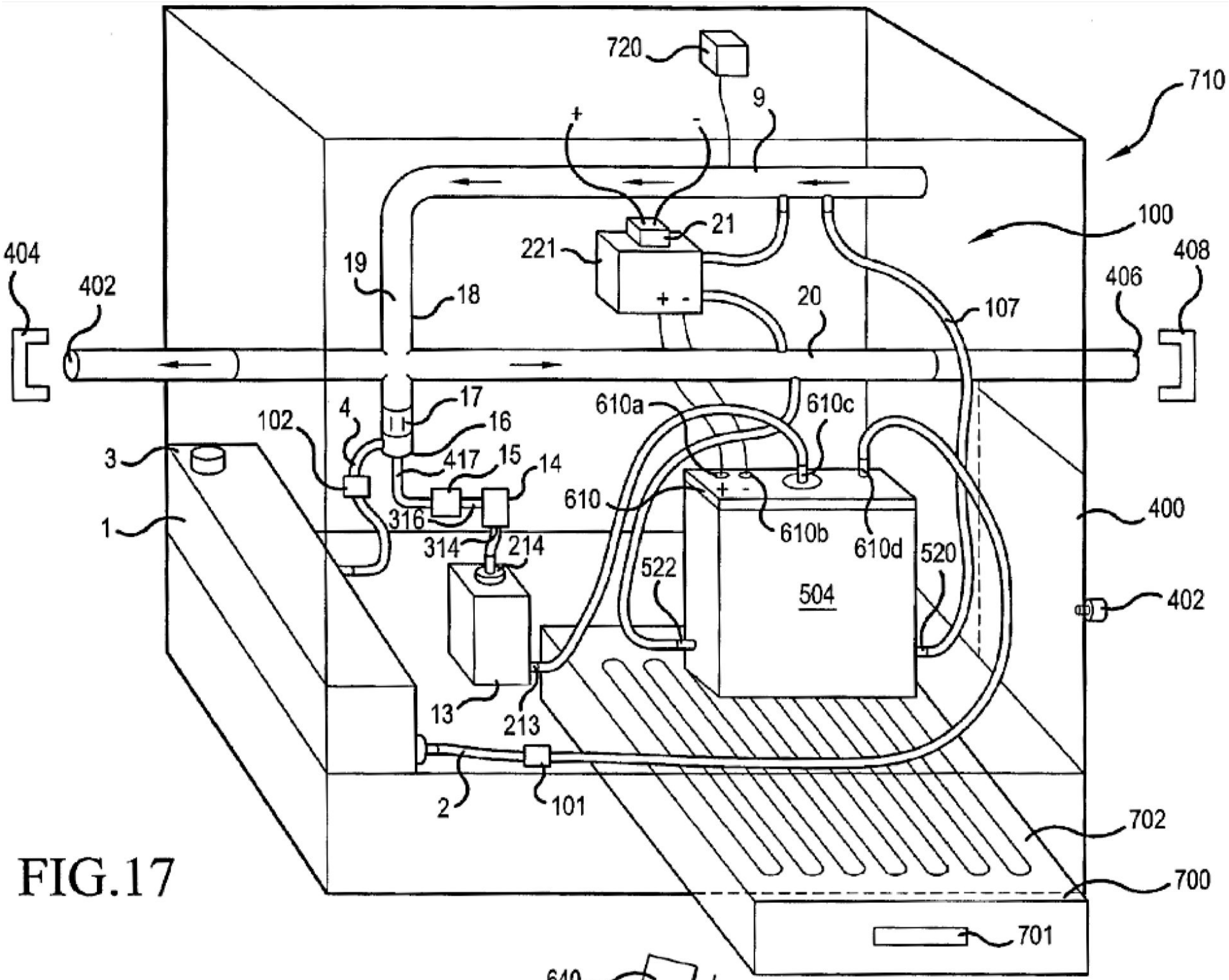
720
710
9
+
-
21
100
221
404
402
19
18
+ -
20
107
406
408
17
16
610a
610c
4
102
417
15
14
3
610
+ -
316
610b
610d
1
314
214
522
520
400
504
402
13
213
2
101
702
700
701

FIG.17

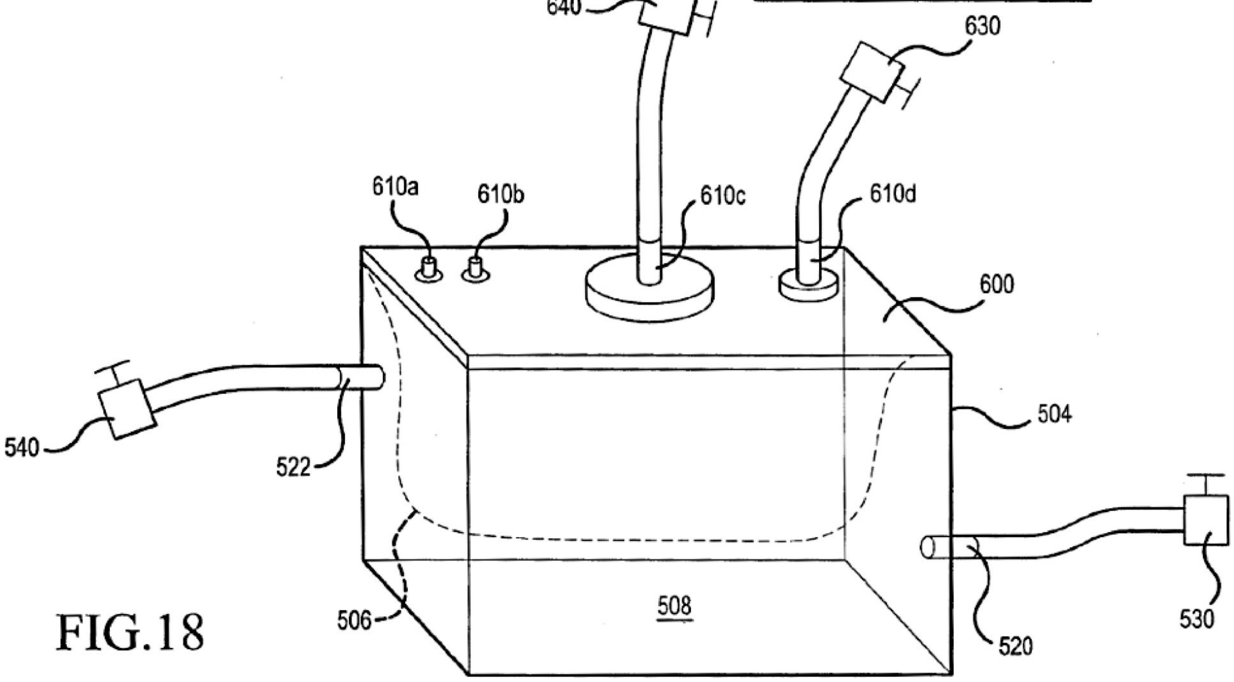
640
630
610a
610b
610c
610d
600
540
522
504
506
508
520
530

FIG.18

In addition, as illustrated in FIG. 17 an electro mechanical device 720 for sensing the presence of hydrogen is positioned at the top of the cabinet 710. If the electro mechanical device 720 detects the presence of hydrogen in the cabinet 710, the electro mechanical device 720 will shut down all electricity to the heating system 100. This can be accomplished either through a software safety, mechanical safety, or a combination of both.

FIG. 18 illustrates a closed state with the reservoir top 610 positioned on the top of the reservoir 504. The distilled water entry conduit 610 d for allowing fresh distilled water to enter the fuel cell chamber or reservoir bottom 506 from the distilled water tank 1 includes a shut off valve 630. The $H_2H_2O_2$ vent conduit 610 c for allowing $H_2H_2O_2$ fuel created by the cell 502 to exit includes a valve shut off 640. The inlet conduit 520 includes a shut off valve 530. The outlet conduit 522 includes a shut off valve 540. The shut off valves 630, 640, 530, 540 enable a user to shut off all entrances and exits for liquids from the integrated fuel cell assembly 500. The shut off valves greatly increase the ease of service of the unit and cut down the time required to complete winterization if needed in cold climates. The shut off valves can also be used by service technicians to diagnose flow problems, or safety equipment. This can be accomplished by opening and closing the valves in a pre-described sequence and taking electronic and or pressure readings to determine failed components.

FIGS. 19-24 illustrate other embodiments of the liquid heating system 100 with improvements in the cooling of the fuel cell 12 and reservoir 5 with the electrolyte contained within. These embodiments enable the liquid heating system 100 unit to operate with smaller liquid containment vessels, and will eliminate the use of liquid within the vessel for cooling the electrolyte and fuel cell 12. These improvements will allow higher temperatures to be reached for enabling the liquid heating system 100 to be used in combination with conventional residential or commercial hot water heaters.

FIG. 19 is similar to FIG. 5 wherein like elements are referred to with the same reference numerals. Thus, a description thereof is omitted. As illustrated in FIG. 19, a thermoelectric device 800 is positioned within the reservoir 5 and is immersed in the electrolytic solution. In another embodiment, the thermoelectric device 800 may be positioned directly within the fuel cell 12 without the need for a reservoir. The thermoelectric device 800 can cool or heat the electrolytic solution depending on the needs of the user.

The thermoelectric device 800 can act as both a refrigerant as well as a heater. When voltage is applied to the positive terminal 810 and negative terminal 820, the device will act as a refrigerant for cooling the reservoir 5 or the fuel cell 12. The greater the voltage applied, the cooler the thermoelectric device 800 becomes. When the polarity is reversed to the thermoelectric device 800, the opposite reaction is created, causing the thermoelectric device 800 to act as a heater to heat up the reservoir 5 or the fuel cell 12. As the electrolytic solution comes in contact with the thermoelectric device 800 it will either be cooled or heated depending on the needs of the user. This is of particular importance if the liquid heater is to be used in extreme hot or cold climates. The use of the thermoelectric device 800 as a cooler or heater will maintain the electrolyte at the optimum temperature to maximize fuel output, and increase the life span of the anode.

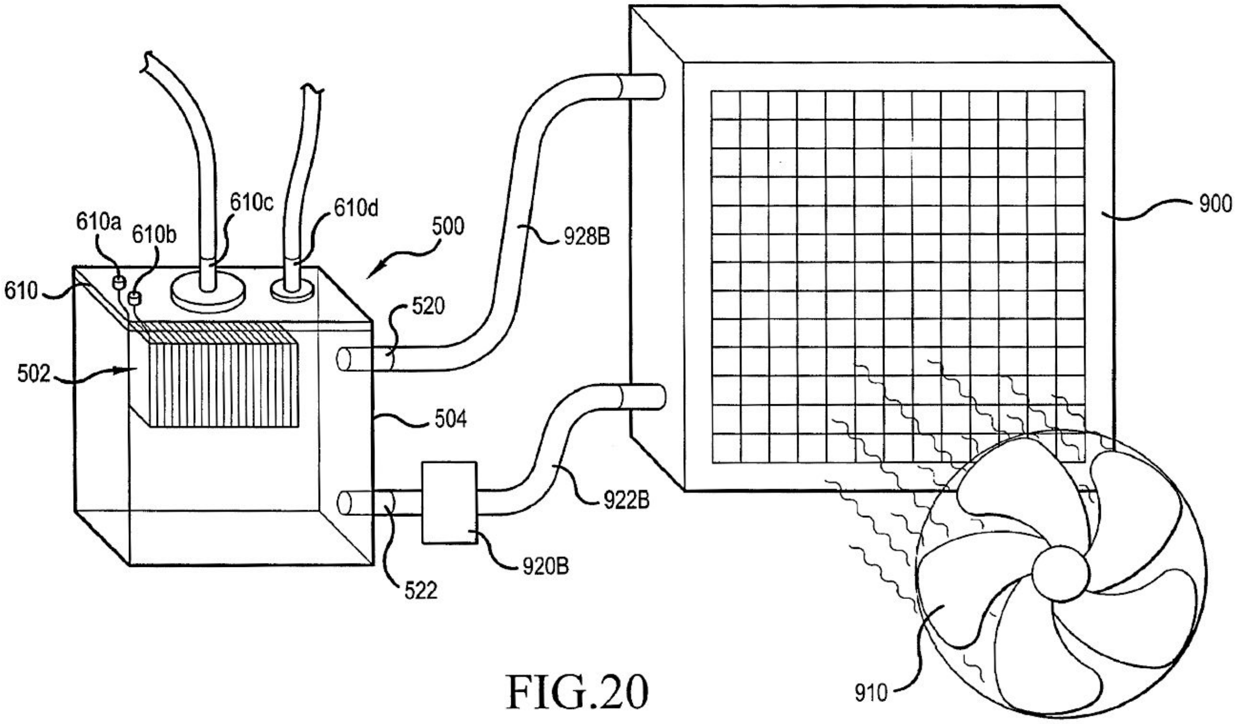

FIG.20

As illustrated in FIGS. 20, 21A and 21B, an air cooled radiator 900 and an electrically powered fan 910 are utilized for cooling the electrolytic solution within the integrated fuel cell assembly 500 or within the individual fuel cell 12 and reservoir 5.

As illustrated in FIG. 21C, depending on the size of the system and the amount of electrolytic solution required, the radiator 900 may act in place of the reservoir 5. A pump 920 pumps the electrolytic solution from the fuel cell 12 through the conduit 922 to a housing 924 on one side of the radiator 900 through the radiator 900 to a housing on the other side 926 of the radiator 900 and through the conduit 928 back to the fuel cell 12. Inside the radiator 900, the electrolytic solution flows into smaller conduits placed together in a grid configuration. The smaller conduits will be attached to thin veins wherein when air is passed over the smaller conduits the electrolytic solution inside the conduit is cooled. The air flowing over the veins will be supplied by an electric fan 910. The fan 910 is controlled by a thermostat 930 that will turn the fan 910 off and on to maintain optimum electrolyte temperature. The cooled electrolytic solution then flows back to the fuel cell 12.

As illustrated in FIG. 21B, the radiator 900 can be connected to the electrolytic reservoir 5 by a supply conduit 922A and a pump 920A operatively connected to a return conduit 928A. The embodiment illustrated in FIG. 21B will function in the same way as previously described except that the reservoir 5 is included in the supply of the electrolytic solution.

As illustrated in FIGS. 20 and 21A, the fuel cell 502 is positioned in the reservoir 504 with a supply conduit 922B connected to a pump 920B for supplying the electrolytic solution to the radiator 900. A return conduit 928B supplies the cooled electrolytic solution back to the reservoir 504. The reservoir 504 includes a hot electrolytic outlet 522 and a cooled electrolytic outlet 520.

The reservoir top 610 includes the negative terminal connection 610 a and the positive terminal connection 610 b for securing to the positive and negative connections from the rectifier bridge 221. The reservoir top 610 also includes an $H_2H_2O_2$ vent conduit 610 c for allowing $H_2H_2O_2$ fuel created by the cell 502 to exit and make its way through the system to be burned by the torch 17. The reservoir top 610 also includes a distilled water entry conduit 610 d for allowing fresh distilled water to enter the fuel cell chamber from the distilled water tank 1.

FIG.21A

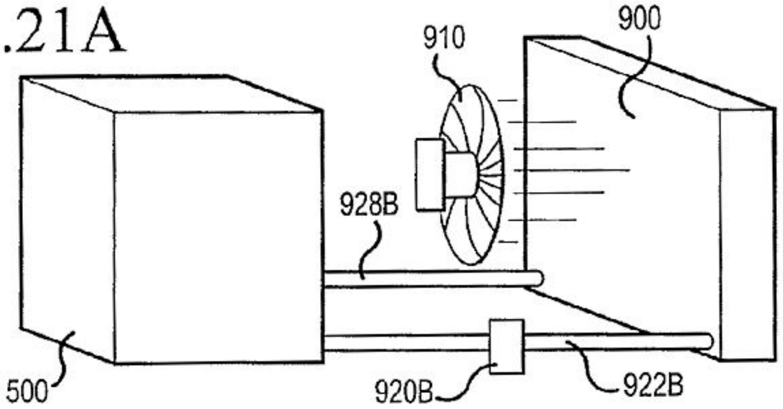

FIG.21B

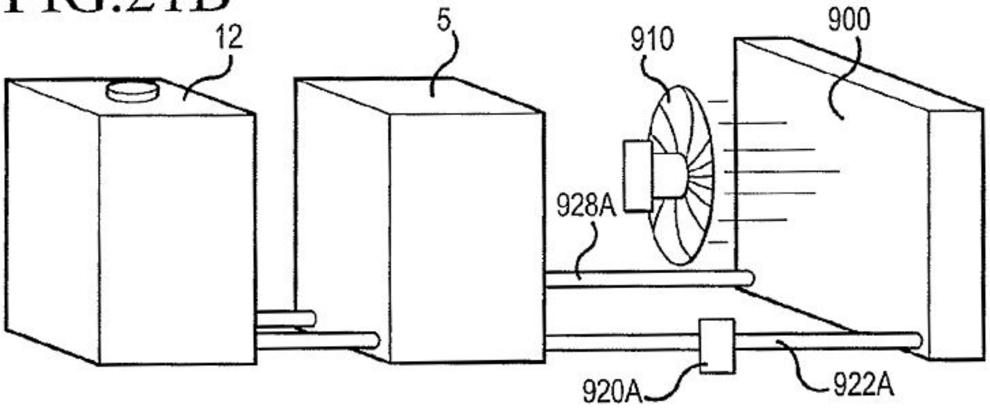

FIG.21C

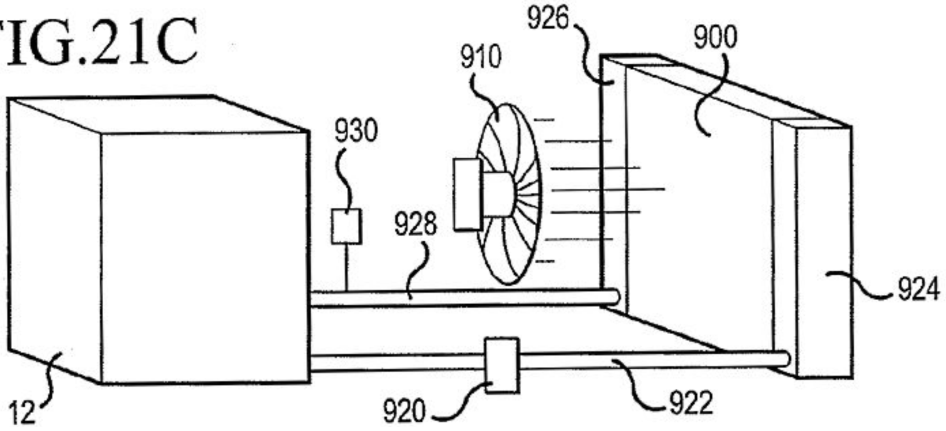

FIG.23

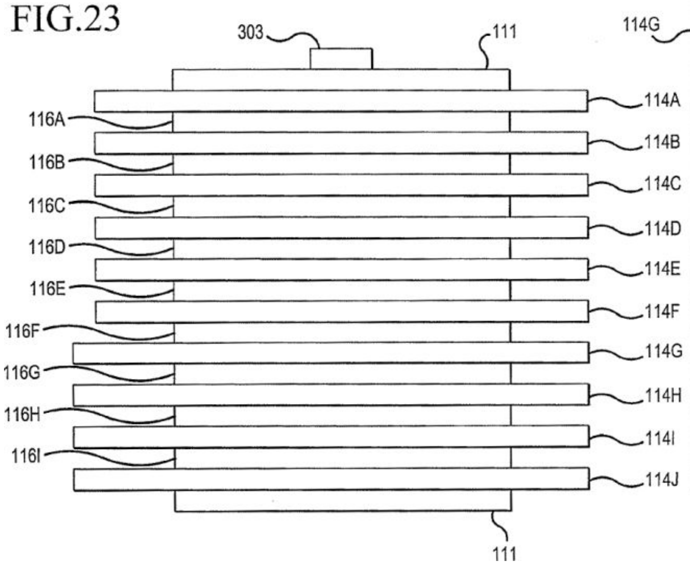

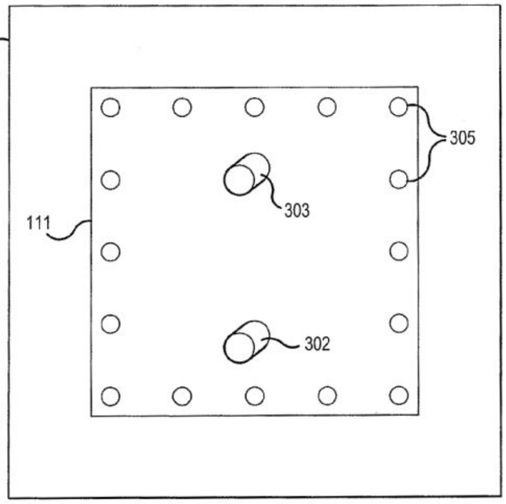

FIG.22

FIGS. 22 and 23 are similar to FIG. 8 wherein like elements are referred to with the same reference numerals. Thus, a description thereof is omitted. FIGS. 22 and 23 illustrate an embodiment for cooling the source of the heat in the electrolytic solution. More specifically, in FIG. 22 each of the positively and negatively charged plates 114A to 114G include a heat sink portion wherein each plate will extend through or past the walls of the two outside polymer plates 111 and will protrude from the edges in one or all directions. The plates 114A to 114G will remain minimally spaced by the gaskets 116A to 116I positioned between adjacent plates 114A to 114G. This configuration will create a heat sink device for drawing the heat out of the plates 114A to 114G and for transferring the heat to the air. The heat sink effect can be enhanced by adding an electrically powered fan that will force air over the heat sink increasing the cooling effect.

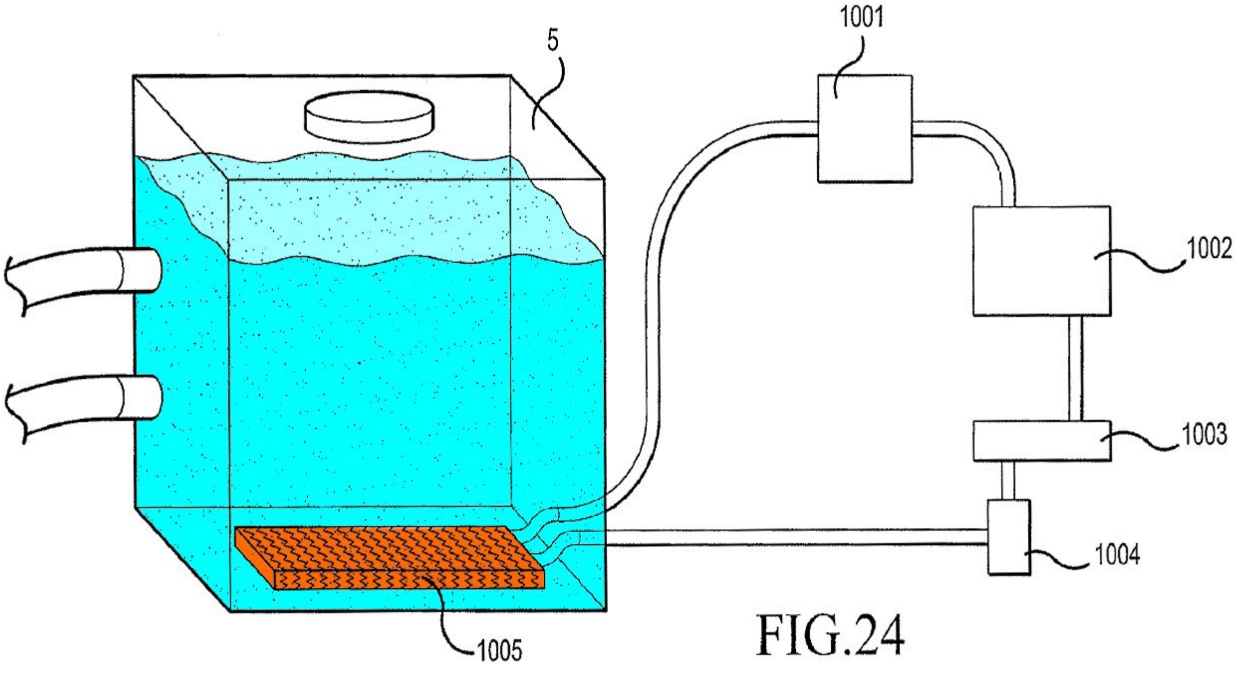

FIG.24

As illustrated in FIG. 24, a compressor 1001 may be employed to compress vapor to cool the electrolytic solution in the fuel cell 12 and or the reservoir 5. Compressed vapor cooling is commonly used in many forms of refrigeration and air conditioning systems. These systems include a compressor 1001, a condenser 1002, a dryer 1003, a metering device 1004, and an evaporator 1005. The evaporator 1005 is the component in the refrigeration system that becomes cold during the operation of the system. In this system the evaporator 1004 is positioned within the electrolyte reservoir 5 where the evaporator 1004 would cool the electrolytic solution to the desired temperature. The electrolytic solution is supplied to the reservoir 5 from the fuel cell 12 by way of a supply conduit and is returned as cooled electrolytic solution through a return conduit to the fuel cell 12.

The invention being thus described, it will be obvious that the same may be varied in many ways. Such variations are not to be regarded as a departure from the spirit and scope of the invention, and all such modifications as would be obvious to one skilled in the art are intended to be included within the scope of the following claims.

Patent claims, citations and more information are available.
Download the complete document from the Patent Office
http://pdfaiw.uspto.gov/.aiw?Docid=20120244485
or Google www.google.co.il/patents/US20120244485

HHO is good for Cooking, Too!

Search YouTube for 'HHO cooking stove Peter Crunk' or just 'HHO cooking'. Watch how easy and safe it is to cook with the preferred type of Waterfuel.

Brian Aiello, VP of Epoch Energy Technology Corp in Taiwan, demonstrates HHO cooking safety in his product showroom movies, and emphasizes the greater safety of cooking with Brown's Gas:

- No cooking gas toxicity
- No explosion hazard
- No gas storage/transport
- In case of cooking fire (the cooking oil itself catches fire) just stop gas supply by flipping a switch
- Cool flame – yet heats up the food very quickly
- Easily adjustable.

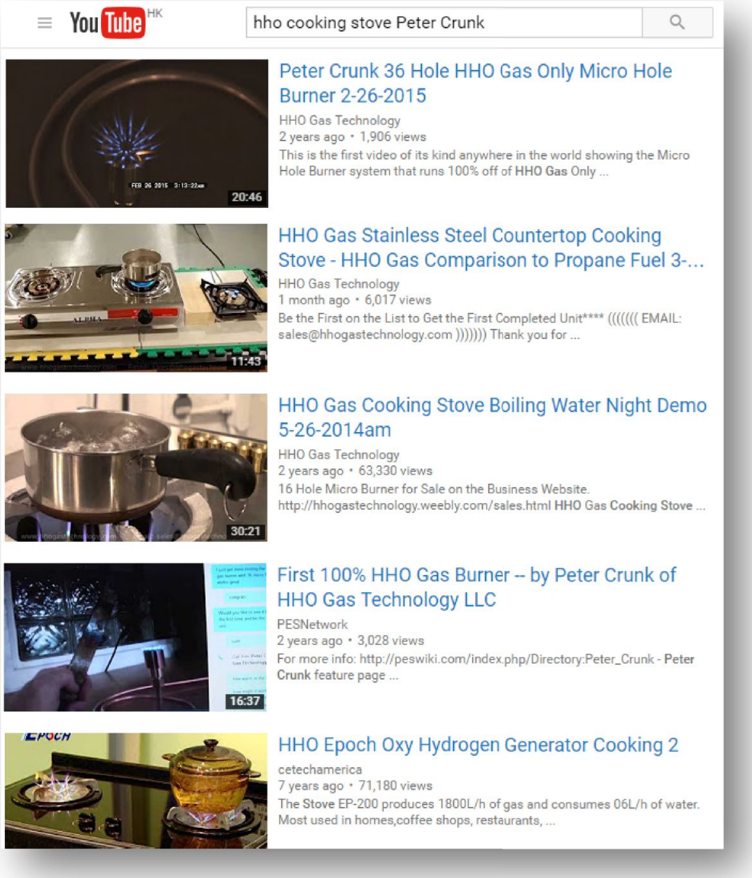

hho cooking stove Peter Crunk

Peter Crunk 36 Hole HHO Gas Only Micro Hole Burner 2-26-2015
HHO Gas Technology
2 years ago • 1,906 views
This is the first video of its kind anywhere in the world showing the Micro Hole Burner system that runs 100% off of **HHO Gas** Only ...

HHO Gas Stainless Steel Countertop Cooking Stove - HHO Gas Comparison to Propane Fuel 3-...
HHO Gas Technology
1 month ago • 6,017 views
Be the First on the List to Get the First Completed Unit**** (((((((EMAIL: sales@hhogastechnology.com))))))) Thank you for ...

HHO Gas Cooking Stove Boiling Water Night Demo 5-26-2014am
HHO Gas Technology
2 years ago • 63,330 views
16 Hole Micro Burner for Sale on the Business Website. http://hhogastechnology.weebly.com/sales.html **HHO Gas Cooking Stove** ...

First 100% HHO Gas Burner -- by Peter Crunk of HHO Gas Technology LLC
PESNetwork
2 years ago • 3,028 views
For more info: http://peswiki.com/index.php/Directory:Peter_Crunk - **Peter Crunk** feature page ...

HHO Epoch Oxy Hydrogen Generator Cooking 2
cetechamerica
7 years ago • 71,180 views
The Stove EP-200 produces 1800L/h of gas and consumes 06L/h of water. Most used in homes,coffee shops, restaurants, ...

https://www.youtube.com/watch?v=jIPabEE-uDY (cooking starting at 3:30 min.) and https://www.youtube.com/watch?v=_GN_a0kcU34 (commercial cooking 0:50 min.)

Stanley Meyer's Heater Patent

Inventor: Stanley A. Meyer. Patent № 4421474 "Hydrogen gas burner" – 1983

PATRICK KELLY EXPLAINS THE IMPORTANCE OF THIS HEATER PATENT on how to burn the hydrogen and oxygen gas mix produced by electrolysis of water: normally, the flame produced is too hot for practical use other than cutting metal or welding. This patent shows a method of reducing the flame temperature to levels suitable for general use in boilers, stoves, heaters, etc.

ABSTRACT

A hydrogen gas burner for the mixture of hydrogen gas with ambient air and non-combustible gasses. The mixture of gasses when ignited provides a flame of extremely high, but controlled intensity and temperature. The structure comprises a housing and a hydrogen gas inlet directed to a combustion chamber positioned within the housing. Ambient air intake ports are provided for adding ambient air to the combustion chamber for ignition of the hydrogen gas by an ignitor therein. At the other end of the housing there is positioned adjacent to the outlet of the burner (flame) a barrier/heating element.

The heating element uniformly disperses the flame and in turn absorbs the heat. The opposite side to the flame, the heating element uniformly disperses the extremely hot air. A non-combustible gas trap adjacent to the heating element captures a small portion of the non-combustible gas (burned air). A return line from the trap returns the captured non-combustible gas in a controlled ratio to the burning chamber for mixture with the hydrogen gas and the ambient air.

DESCRIPTION

CROSS REFERENCE

The hydrogen/oxygen generator utilized in the present invention is that disclosed and claimed in my co-pending patent application, Ser. No.: 302,807, filed: Sept. 16, 1981, for: HYDROGEN GENERATOR SYSTEM. In that process for separating hydrogen and oxygen atoms from water having impurities, the water is passed between two plates of similar non-oxidizing metal. No electrolyte is added to the water. The one plate has placed thereon a positive potential and the other a negative potential from a very low amperage direct-current power source. The sub-atomic action of the direct current voltage on the non-electrolytic water causes the hydrogen and oxygen atoms to be separated--and similarly other gasses entrapped in the water such as nitrogen. The contaminants in the water that are not released are forced to disassociate themselves and may be collected or utilized and disposed of in a known manner.

The direct current acts as a static force on the water molecules; whereas the non-regulated rippling direct current acts as a dynamic force. Pulsating the direct current further enhances the release of the hydrogen and oxygen atoms from the water molecules.

In my co-pending patent application, Ser. No.: 262,744, filed: May 11, 1981, for: HYDROGEN AIRDATION PROCESSOR, there is disclosed and claimed the utilization of the hydrogen/oxygen gas generator. In that system, the burn rate of the hydrogen gas is controlled by the controlled addition of non-combustible gasses to the mixture of hydrogen and oxygen gasses.

PRIOR ART

The electrolysis process for generating hydrogen and oxygen gas is well known in the art. It is, of course, further understood with a proper mixture of oxygen gas, the hydrogen gas is combustible and under ideal conditions a flame, may be had. Reference is made to U.S. Pat. No.: 4,184,931. However, in that the burning velocity of hydrogen is 265-325 cm./sec. versus 37-45 cm./sec. of that of gasoline, the velocity of hydrogen is so great that the hydrogen ensuing from a nozzle will not under ordinary circumstances sustain a flame.

Therefore, to sustain a flame at a nozzle attached to a hydrogen generator the burning velocity of the hydrogen gas must be reduced.

It has been found that all water in its natural state whether it be tap water, well water, sea water, or fresh water is a saturate of ambient air. Further, in that ambient air contains a substantial amount of nitrogen, all natural water will have entrapped therein nitrogen. Again, the percentage of nitrogen entrapped in natural water has been determined to be a fixed percentage and very uniform at seventeen (17%) percent--irrespective of the source of the water or its impurities. Hence, a natural water gas analysis will show a seventeen percent of nitrogen relative to the hydrogen and the oxygen.

The nozzle connected to the collection chamber via an appropriate line, has a port opening of a controlled size and configuration, related to the size of the flame and the temperature and velocity of the burning gas mixture. To maintain the flame, that is to prevent blowout, additional nozzles are included when the overall flame size is to be increased.

SUMMARY OF INVENTION

The present invention is for a hydrogen gas burner and comprises a combustion chamber for the mixture of hydrogen gas, ambient air, and non-combustible gasses. The mixture of gasses is ignited and burns at a retarded velocity rate and temperature from that of hydrogen gas, but at a higher temperature rate than other gasses.

The extremely narrow hydrogen gas mixture flame of very high temperature is restricted from the utilization means by a heat absorbing barrier. The flame strikes the barrier which in turn disperses the flame and absorbs the heat therefrom and thereafter radiates the heat as extremely hot air into the utilization means.

Positioned on the opposite side of the heat radiator/barrier is a hot air trap. A small portion of the radiated heat is captured and returned to the combustion chamber as non-combustible gasses. Valve means in the return line regulates the return of the non-combustible gas in a controlled amount to control the mixture. The present invention is principally intended for use with the hydrogen generator of my co-pending patent application, supra; but it is not to be so limited and may be utilized with any other source of hydrogen gas.

OBJECTS

It is accordingly a principal object of the present application to provide a hydrogen gas burner that has a temperature controlled flame and a heat radiator/barrier.

Another object of the present invention is to provide a hydrogen gas burner that is capable of utilizing the heat from a confined high temperature flame.

Another object of the present invention is to provide a hydrogen gas burner that is retarded from that of hydrogen gas, but above that of other gasses.

Another object of the present invention is to provide a hydrogen gas burner that utilizes the exhaust air as non-combustible gas for mixture with the hydrogen gas.

Another object of the present invention is to provide a hydrogen gas burner that is simple but rugged and most importantly safe for all intended purposes.

Other objects and features of the present invention will become apparent from the following detailed description when taken in conjunction with the drawings in which:

BRIEF DESCRIPTION OF DRAWINGS

FIG. 1 is an overall cross-sectional view of the present invention in its most preferred embodiment.

FIG. 2 is a graphical illustration of the burning of various standard fuels with that of hydrogen velocities.

DETAILED DESCRIPTION OF INVENTION

With particular reference FIG. 1 there is illustrated in a schematic cross-section of the principals of the present invention.

The structure of the preferred embodiment comprises a housing 10, having an igniter 20 extending through the wall 11 thereof. A combustion chamber 60 positioned within the housing 10 has a first open end 62. A hydrogen gas 72 inlet 30 directs hydrogen gas via port 37 from a source 35 to the inlet 62 of the combustion chamber 68. Also directed to the same inlet 62, and assisted by flanges 64 and 66, is ambient air 70 entering through ports 13 in the housing 10.

Adjacent the opposite end of the combustion chamber 60 the gas mixture 75 is ignited by the ignitor 20 to produce flame 77.

FIG. I

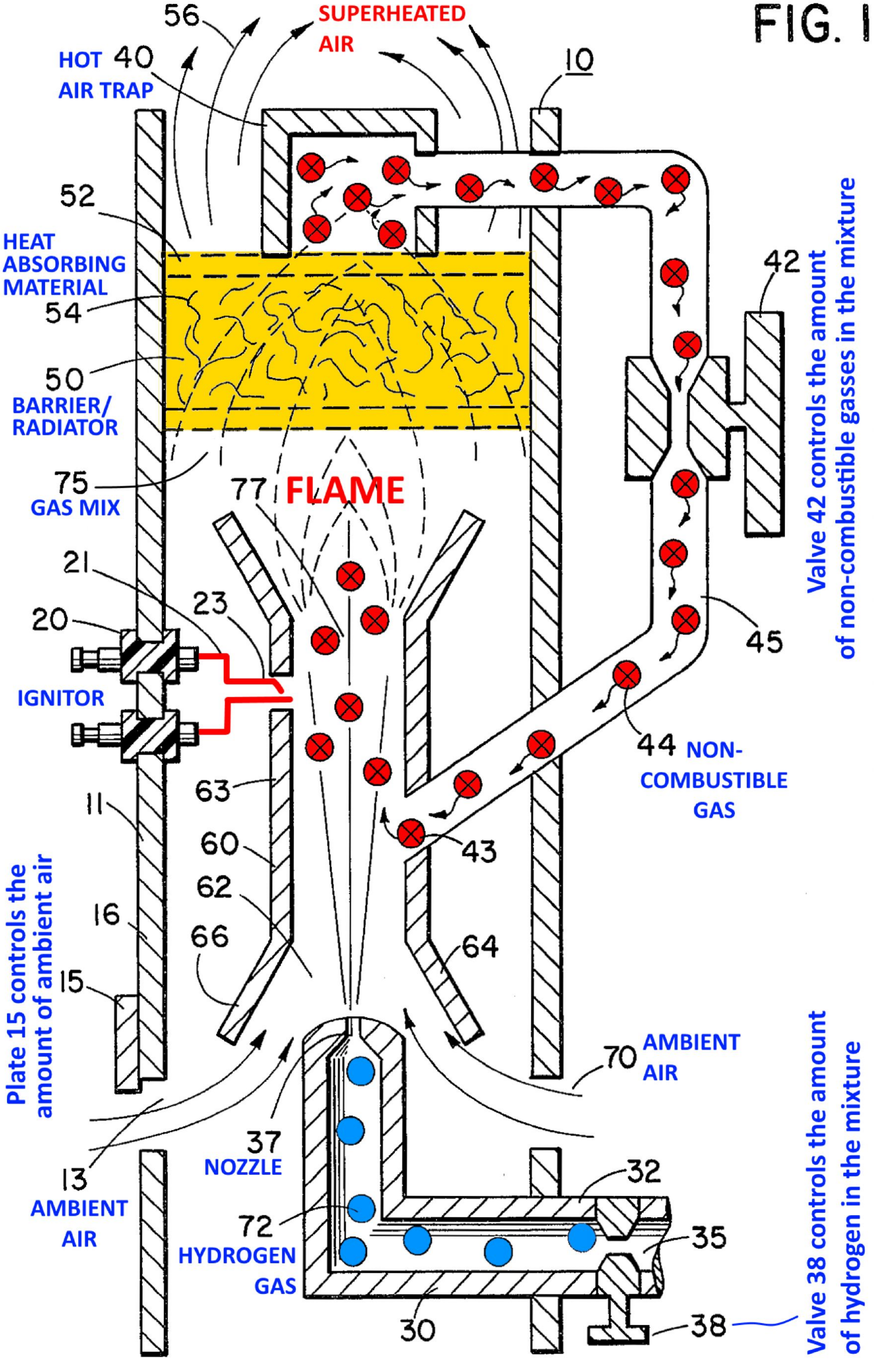
56
SUPERHEATED AIR
HOT AIR TRAP
40
10
52
HEAT ABSORBING MATERIAL
54
50
BARRIER/ RADIATOR
75
GAS MIX
77
FLAME
42
21
20
23
IGNITOR
45
44
NON-COMBUSTIBLE GAS
63
11
43
60
62
16
66
64
15
AMBIENT AIR
70
37
NOZZLE
13
AMBIENT AIR
32
72
HYDROGEN GAS
35
30
38
Plate 15 controls the amount of ambient air
Valve 42 controls the amount of non-combustible gasses in the mixture
Valve 38 controls the amount of hydrogen in the mixture

The velocity of the flame 77 causes it to strike and penetrate the barrier/radiator 50. The barrier 50 is of a material, such as metallic mesh or ceramic material, to disperse therein the flame and in turn become saturated with heat. The flame 77 is of a size sufficient to be dispersed throughout the barrier 50, but yet, not penetrate through the barrier 50.

Radiated from the surface 52 of the barrier 50 is superheated air 56 (gasses) to be passed on to a utilization device. Adjacent to surface 52 of barrier/radiator 50 is a hot air trap 40 with closed loop line 45 returning non-combustible gas 44 to the combustion chamber 60. Control valve 42 is intermediate the line 45.

In operation of the preferred embodiment hydrogen gas, 72, emitted from the nozzle 37 is directed to the combustion chamber 60. The flanges 64 and 66 on the open end of housing 63 of the combustion chamber 60 enlarges the open end of 62. In the enlargement ambient air from the opening 13 in the housing 10 is also directed to the combustion chamber 60.

The ambient air and hydrogen traverses the opening 43 and further mixes with the non-combustible gas 44 from the closed loop line 45 with the hot air trap 40.

The mixture of hydrogen gas 72, ambient air 70, and non-combustible gas 44, is ignited by the ignitor 20 having electrical electrodes 21 and 23. Upon ignition flame 77 ensues.

The mixture is controlled with each of three gasses. That is, the line 32 from the hydrogen source 35 has a valve 38 therein for controlling the amount of hydrogen 72 emitted from the nozzle 37. The opening 13 has a plate adjustment 15 for controlling the amount of ambient air 60 directed to the combustion chamber 60, and the closed-loop line has valve 42, as aforesaid, for controlling the amount of non-combustible gasses in the mixture.

It can be appreciated that the temperature of the flame 77 and the velocity of the flame 77 is a function of the percentage of the various gasses in the mixture. In a practical embodiment, the flame 70 temperature and velocity was substantially retarded from that of a hydrogen flame per se; but yet, much greater than the temperature and velocity of the flame from the gasses utilized in a conventional heating system.

To maintain a sufficient pressure for combustion of the hydrogen gas mixture with a minimum of pressure (for safety) and to limit blowout, the nozzle 37 opening 39 is extremely small. As a consequence, if the hydrogen gas were burned directly from the nozzle 37, the flame would be finite in diameter. Further, its velocity would be so great it is questionable whether a flame could be sustained.

The mixing of ambient air and non-combustible gas does enlargen the flame size and does reduce its velocity. However, to maintain a flame higher in temperature and velocity than the conventional gasses, the size and temperature of the flame is controlled by the aforementioned mixture.

Therefore, to utilize the flame 77 in a present day utilization means, the flame is barred by the barrier 50. The barrier 50 is of a material that can absorb safely the intense flame 77 and thereafter radiate heat from its entire surface 52. The material 54 can be a ceramic, metallic mesh or other heat absorbing material known in the art. The radiated heat 56 is directed to the utilization means.

As aforesaid, the mixture of gasses that are burned include non-combustible gasses. As indicated in the above-noted co-pending patent applications, an excellent source of non-combustible gasses are exhaust gasses. In this embodiment, the trap 50 entraps the hot air 74 and returns the same, through valve 42, to the combustion chamber 60 as non-combustible gas.

With reference to FIG. 2 there is illustrated the burning velocity of various standard fuels. It can be seen the common type of fuel burns at a velocity substantially less than hydrogen gas.

FIG. 2

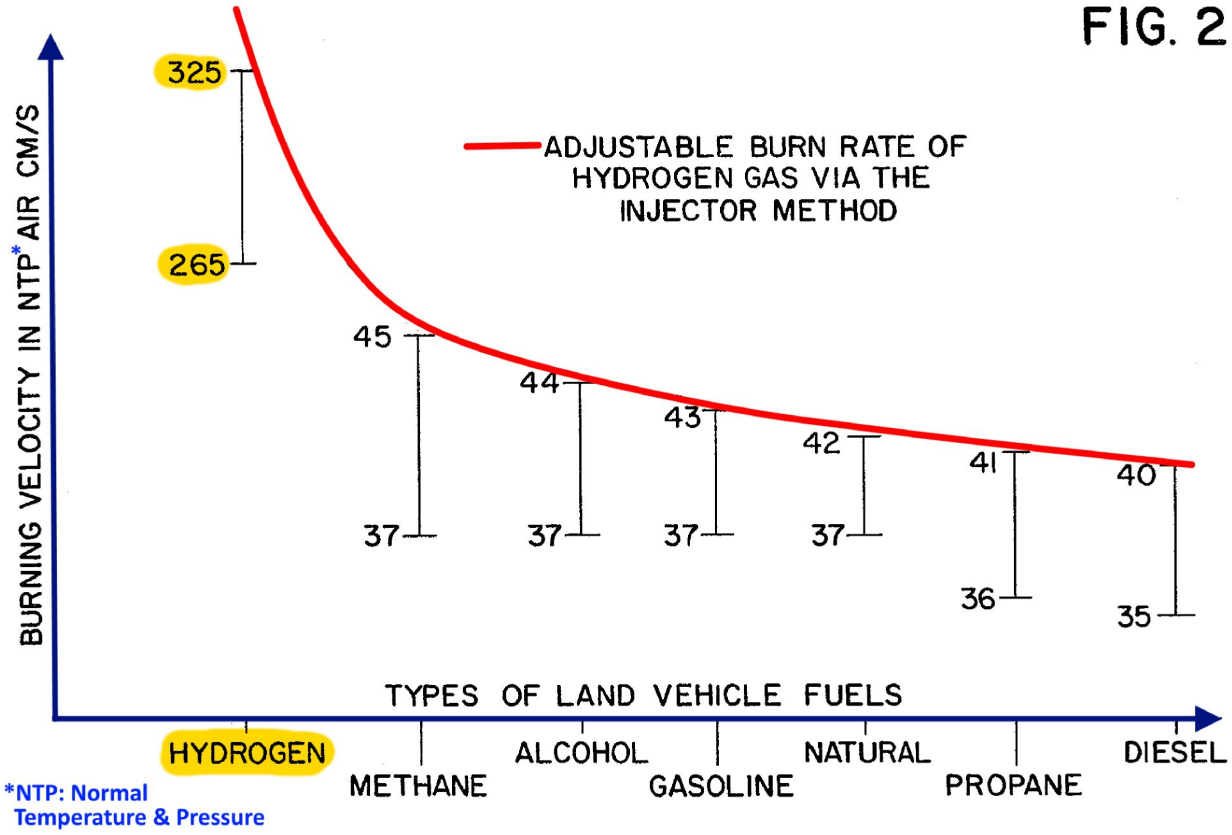

*NTP: Normal Temperature & Pressure

The ratio of hydrogen with non-combustible oxygen gasses is varied to obtain optimum burning velocity and temperature for the particular utilization. Once this is attained, the ratio, under normal conditions, will not be altered. Other uses having different fuel burn temperature and velocity will be adjusted in ratio of hydrogen/oxygen to non-combustible gasses in the same manner as exemplified above.

Further, perhaps due to the hydrogen gas velocity, there will occur unburnt gas at the flame 77 output. The barrier 50, because of its material makeup will retard the movement and entrap the unspent hydrogen gas. As the superheated air 77 is dispersed within the material 54, the unspent hydrogen gas is ignited and burns therein. In this way the barrier 50 performs somewhat in the nature of an after burner.

Chapter 23.

Waterfuel for Welding, Cutting and Brazing

Oxy-Hydrogen Welding in 1916-1903-1800

- The article below is from the book "Modern Shop Practice" by Howard Monroe Raymond: http://chestofbooks.com/crafts/machinery/Shop-Practice-V1/index.html
- Also available from Amazon (hardcover, 2572 pages in 7 volumes): http://www.amazon.com/gp/product/B0012DZHWU
- Howard Monroe Raymond (1872–1943) was an American physicist, Professor of Physics and President of the Armour Institute of Technology from 1892 to 1932. He was also known as the editor of the Cyclopedia of Modern Shop Practice. More: https://en.wikipedia.org/wiki/Howard_M._Raymond

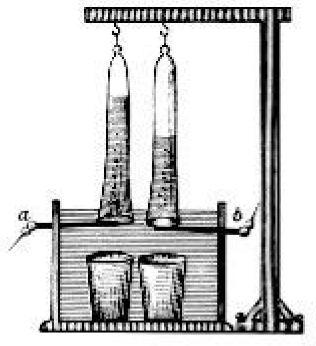

- The article below was published in 1916 – but in it Professor Raymond indicates that this professional application is older than 1903 (which is when French engineers Edmond Fouché and Charles Picard became the first to develop oxygen-acetylene welding) and even older than 1800 (which is when Alessandro Volta, William Nicholson and Anthony Carlisle started electrolyzing water).

Oxy-Hydrogen Welding

The use of oxygen and hydrogen as the gases for welding and cutting is older than the oxy-acetylene process and dates back to before the production of oxygen by either electrolysis or liquefaction of air. Oxygen was probably generated in those days from potassium chlorate and manganese dioxide, or perhaps from potassium and sodium peroxides and water, and the hydrogen from hydrochloric acid and zinc. The oxy-hydrogen process was developed by Newman who used detonating gas (pure oxygen and hydrogen mixed) at a pressure of about 3 atmospheres. This gas is still used to some extent in welding platinum, lead, and precious metals but it is rapidly being superseded by apparatus designed to use the oxygen and hydrogen from separate cylinders.

Equipment

The apparatus required for oxy-hydrogen welding is similar to that in use for oxy-acetylene welding and consists primarily of the two steel cylinders for the oxygen and hydrogen (at pressures of 1500 to 2000 pounds per square inch); a mixer and insulator of the gases, together with a regulator; high pressure reducing valves for each of the gases; armored hose; and the special blowpipe, or torch. When the blowpipe is used, there are two tubes leading to it, one for the oxygen and the other for the hydrogen, and the blowpipe is made with an inner and an outer tube. The oxygen is carried through the inner tube and the hydrogen is carried through the outer tube and lighted first.

After the oxygen is turned on, the flame is adjusted to suit the work in hand and the mixing is done in the tip of the blowpipe just before the gases enter the flame. Hydrogen and air can be used with the same sort of blowpipe for light work requiring but moderate heat, such as lead burning, but the process is much slower and more expensive than with the oxy-hydrogen flame.

For commercial welding another type of torch is used and the gases are combined in the mixer and carried to the burner through a single tube. This torch has an enlargement, where the gases enter, which reduces their velocity; from this chamber the gases pass through the smooth tubular body to the nozzle. The latter diminishes in size toward the tip and causes the gas to increase in speed up to the proper velocity.

Handling Oxy-Hydrogen Torch

The oxy-hydrogen flame is pale blue, almost colorless in fact, and has a temperature of about 2000 degrees centigrade. When lighting the torch, the hydrogen should be turned on about two-thirds and ignited; the oxygen should then be turned on enough to give a pale blue conical flame, and then the hydrogen should be turned on full. This will take but a few seconds, and a flame, which will not melt the metal too rapidly, is better than one of such intensity as to burn the work. The end of the cone of oxygen in the flame should never touch the work or that will burn it also. When through welding, the oxygen should be turned off first. Theoretically, two parts of hydrogen should be used for each part of oxygen but experience shows that it is desirable to use about three parts of hydrogen to one of oxygen. Some operators advocate using even more hydrogen, but this is not necessary when the gases are properly mixed before entering the flame.

Process Of Oxy-Hydrogen Welding

The process of welding with oxy-hydrogen is similar to other hot-flame processes and the joints must be beveled in the same way to make them accessible for filling. The work should be heated first, in order to prevent chilling of the filling material, and the melt bar fused in to make the joint. In Germany this gas is used to heat plates and then they are welded by hammering, as in blacksmith work, this operation being used to a large extent in making large steel pipes. Iron, steel, copper, lead, zinc, and the other industrial metals can be welded by this process; the cost is similar to that for work done by the oxy-acetylene process, although somewhat higher for most operations. Each metal requires its own special method of treatment and the operator will soon learn the best ways of handling each job, but this process requires a skilled workman and the success or failure of the weld will depend largely on the man who does it.

Time Required For Weld

The time required for welding seams in steel plates will vary from two minutes per foot on 1/32-inch sheets up to five minutes on ¼-inch plates. It is claimed that the oxy-hydrogen flame does not affect the ductility of the metal like the oxy-acetylene flame and, if this is true, it should be good for boiler repairs and other work in which this quality is desirable.

Almost a century after Raymond, we now have videotaped proof that HHO welding is indeed fast and effective: https://youtu.be/2xHvEsUv0wg

Waterfuel Torch & Waterfuel Arc Welding PATENTS

Inventor: William Rhodes. Patent № 3262872
"Apparatus for the electrolysis production of hydrogen and oxygen for the safe consumption thereof" – 1966

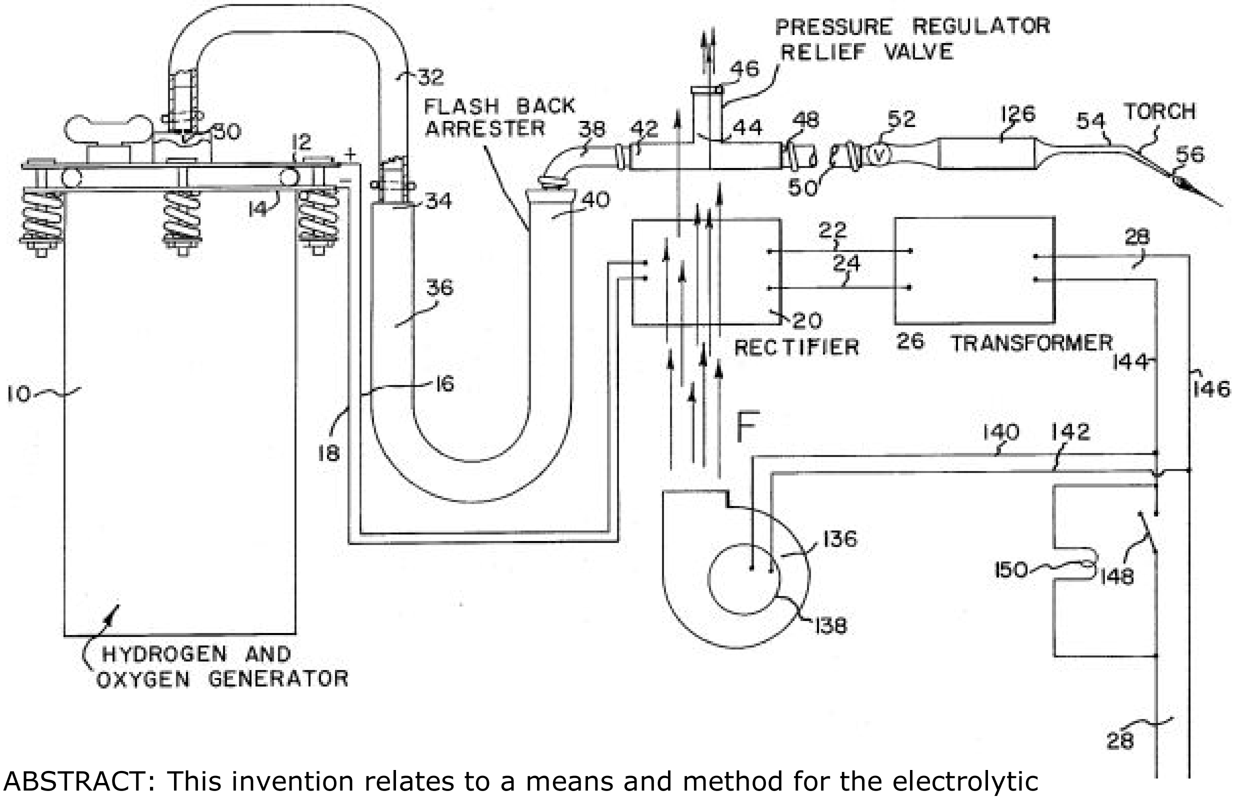

ABSTRACT: This invention relates to a means and method for the electrolytic production of Hydrogen and Oxygen and for the safe consumption thereof, by a torch or other means controlling the combustion of these gases.

Inventor: Yull Brown. Patent № 4014777 "Welding" – 1977

This invention relates to welding, brazing or the like utilizing a mixture of hydrogen and oxygen generated in substantially stoichiometric proportions in an electrolytic cell by electrolytic dissociation of water, the mixture so generated being passed from the generator through a flash-back arrestor and thence to a burner where the gases are ignited. The invention also relates to atomic welding in which the above mentioned mixture is passed through an arc causing dissociation of both the hydrogen and oxygen into atomic hydrogen and oxygen which on recombination generate an intensely hot flame.

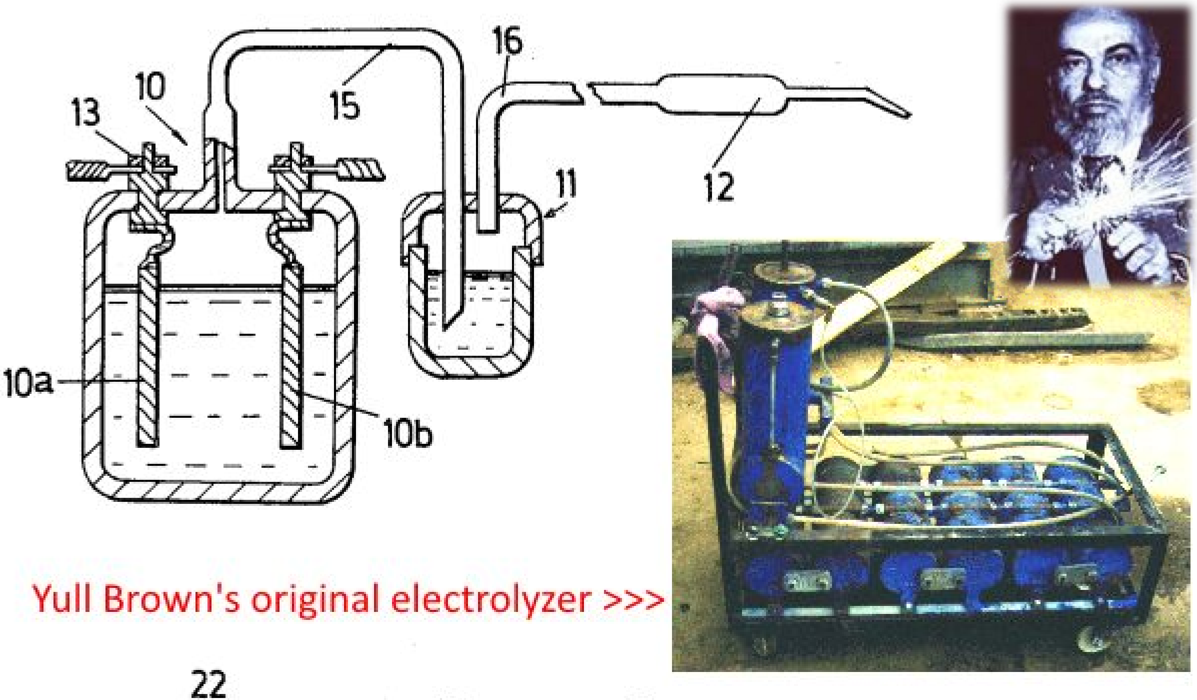

Yull Brown's original electrolyzer >>>

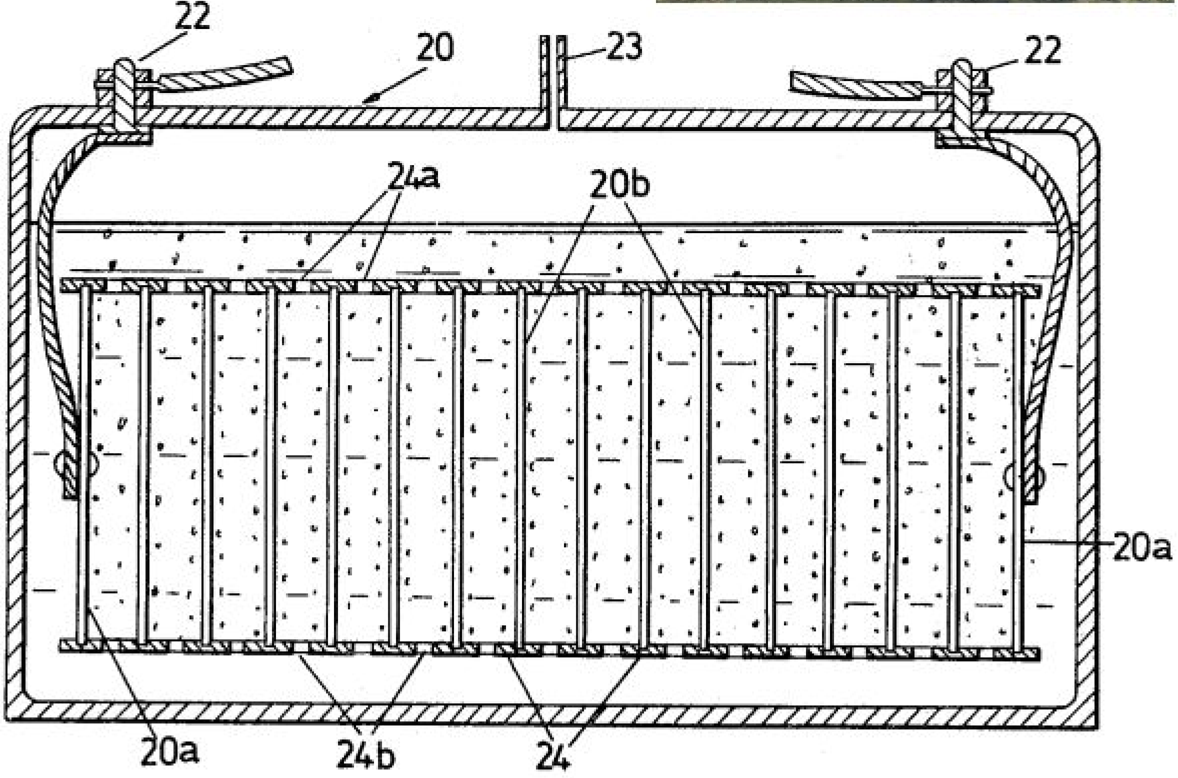

Inventor: Yull Brown. Patent № 4081656 "Arc Assisted Oxy/Hydrogen Welding" – 1978

This invention relates to welding, brazing or the like utilizing a mixture of hydrogen and oxygen generated in substantially stoichiometric proportions in an electrolytic cell by electrical dissociation of water, the mixture so generated being passed from the generator through a flashback arrestor and thence to a burner where the gases are ignited.

The invention also relates to atomic welding in which the above mentioned mixture is passed through an arc causing dissociation of both the hydrogen and oxygen into atomic hydrogen and oxygen which on recombination generate an intensely hot flame.

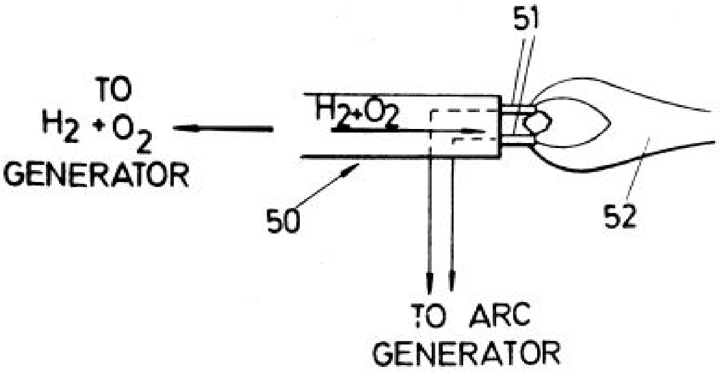

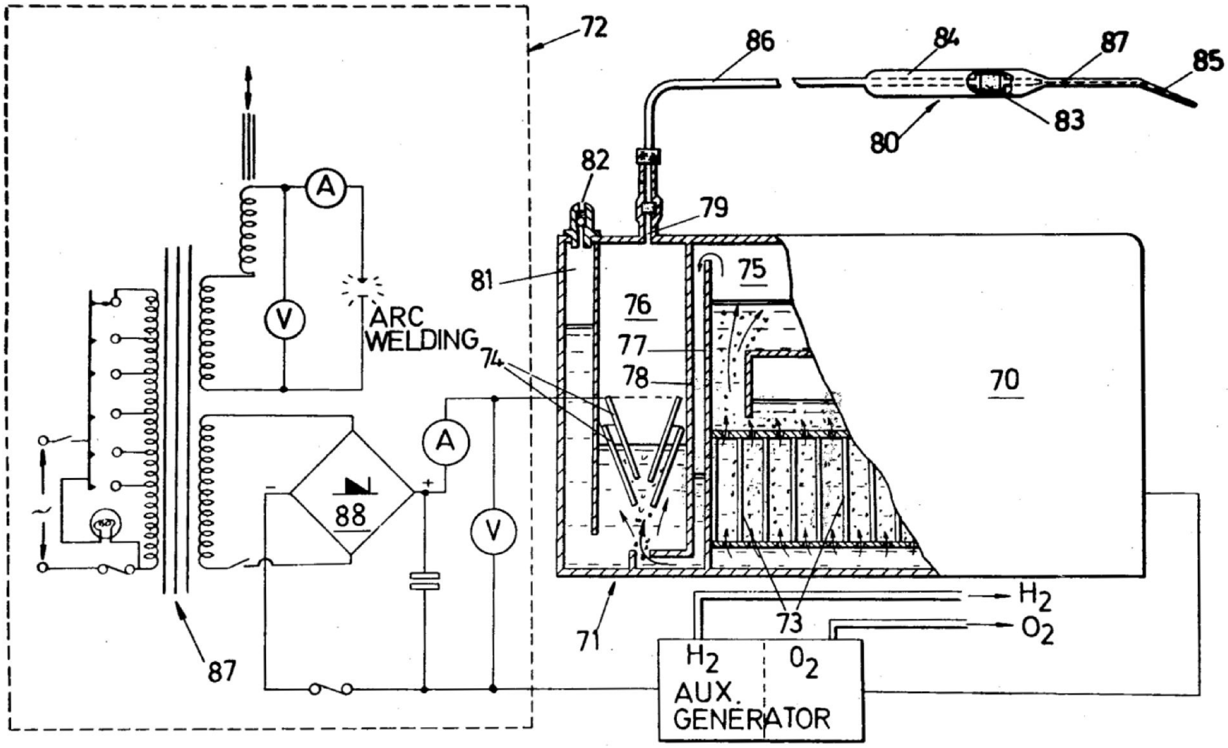

Inventor: Alan Willey. Patent № 5082544
"Apparatus for gas generation" – 1992

An electrolytic gas generating apparatus for producing a combustible mixture of hydrogen and oxygen by electrolysis of water is disclosed, for particular use in a gas welding apparatus.

The generating apparatus comprises a DC power supply 100 connected to electrolytic cells 200, a dehumidifier 400 for scrubbing the gas mixture generated by the cells 200, a gas regulator 500, a modifier 600 which modifies the combustion characteristics of the gas and a flash arrester 660.

Gas generation is controlled by a main control board 800 in accordance with sensors which measure parameters to calculate indirectly the gas flowrate and control this in accordance with demand.

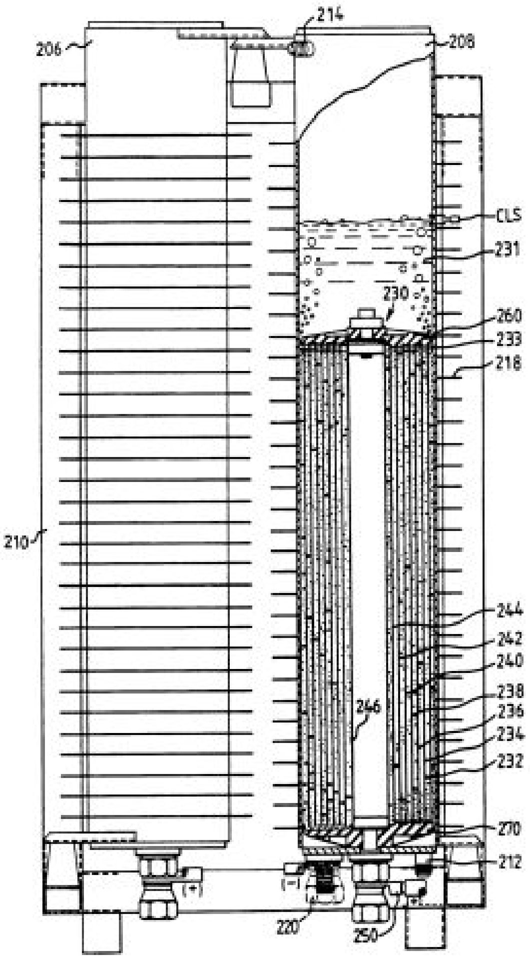

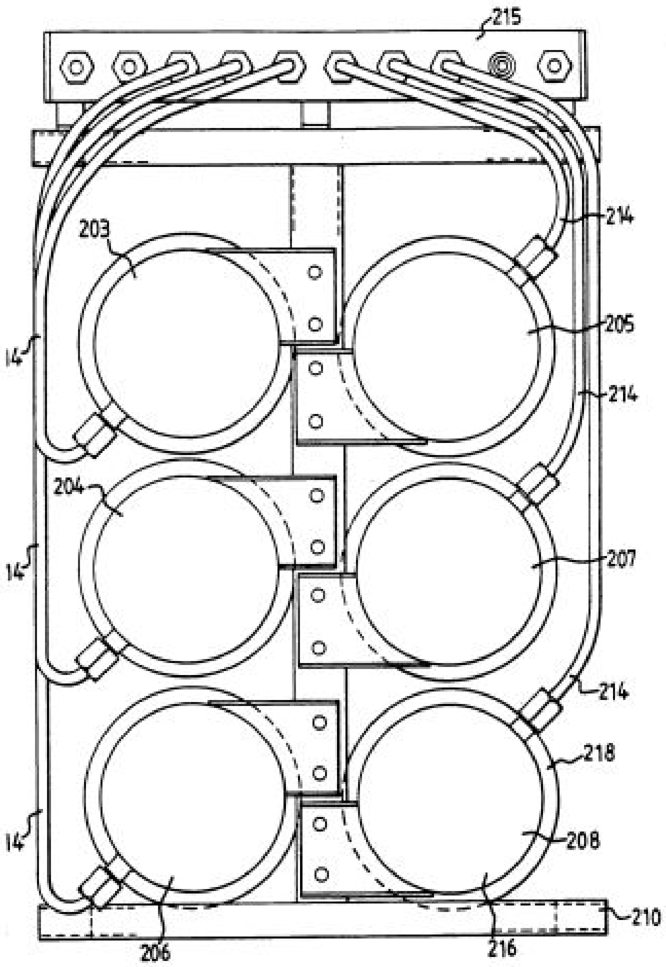

Inventor: Huang Chiang. Patent № 5244558
"Apparatus for generating a mixture of hydrogen and oxygen for producing a hot flame" – 1993

This invention relates to an apparatus for generating a mixture of hydrogen and oxygen for producing a hot flame and in particular to one including a housing, an electrolytic chamber fixedly mounted within the housing and having two electrodes extending out of the electrolytic chamber to connect with a rectifier, a first safety device connected with an outlet of the electrolytic chamber, a control valve connected with an outlet of the first safety device, a dryer connected with an outlet of the first safety device, and a second safety device connected with an outlet of the dryer and having a chamber in which are mounted a spring-loaded ball which will open an outlet of the second safety device when the pressure of hydrogen and oxygen in the electrolytic chamber exceeds a predetermined value.

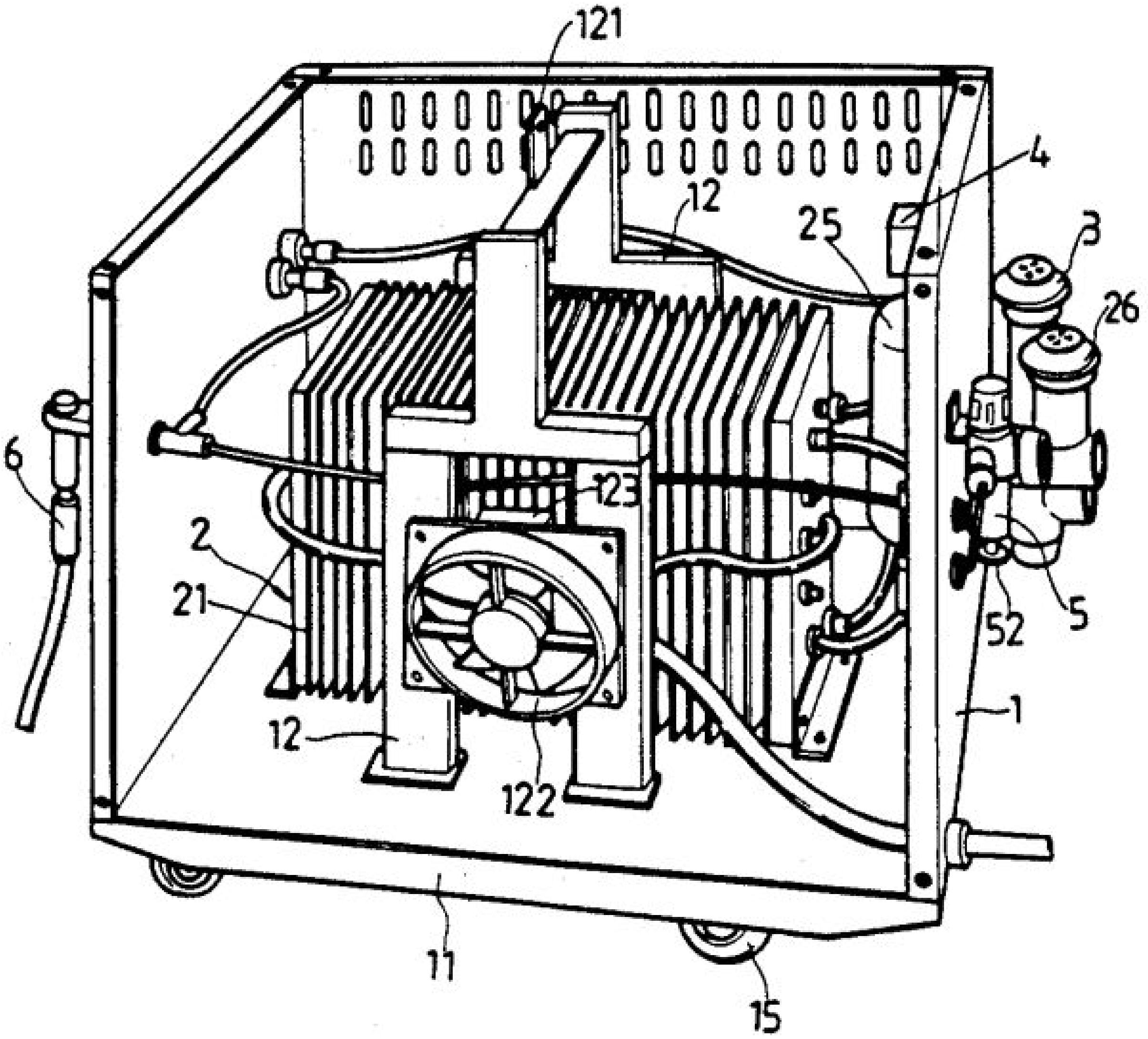

Inventor: Yang Lin. Patent № 5628885 "Extraction installation for hydrogen and oxygen" – 1997

This electrolytic apparatus for a welding machine uses an electrolytic cell, a mixing tank and a multi-control switch. The electrolytic cell is composed of several pieces of electrode plates, which are assembled in a row, the farthest side of which is connected to the positive and negative poles of electrolysis power. After electrolysis, the gas proceeds in a storage tank and the liquid is guided back into the electrolytic cell for recycling use.

The fuel gas then goes into a first chamber to get rid of water. In the meantime, part of the fuel gas will be combined with carbohydrate dissolvent to alter its fuel composition and then be recombined with the rest of the gas to provide a desired fuel. This way, the heat of the gas can be heightened, flame temperature can be lowered, and the output ratio for the fuel gas can be controlled and adjusted to attain a welding gun's flame within a comprehensive scope of temperature and heat. Furthermore, this invention uses the pressure from a multi-control switch monitoring the process to keep it in a tolerable range to provide safety protection.

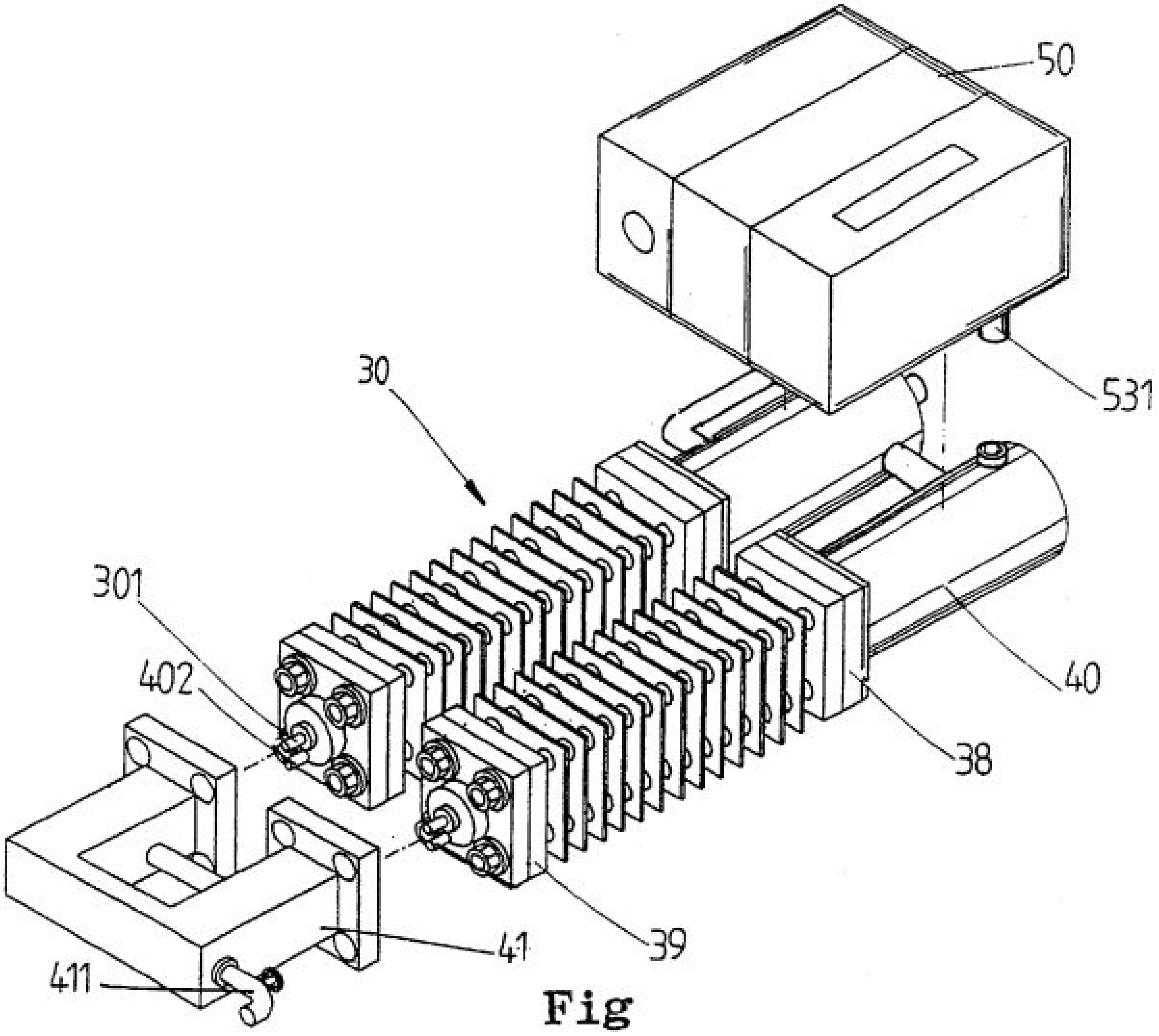

Fig

Inventor: **Ruggero Maria Santilli**. Patent № 6183604 "Durable and efficient equipment for the production of a combustible and non-pollutant gas from underwater arcs and method therefor" – 2001

A system for producing a clean burning combustible gas comprising an electrically conductive first electrode and an electrically conductive second electrode. A motor coupled to the first electrode is adapted to move the first electrode with respect to the second electrode to continuously move the arc away from the plasma created by the arc. A water tight container for the electrodes is provided with a quantity of water within the tank sufficient to submerge the electrodes.

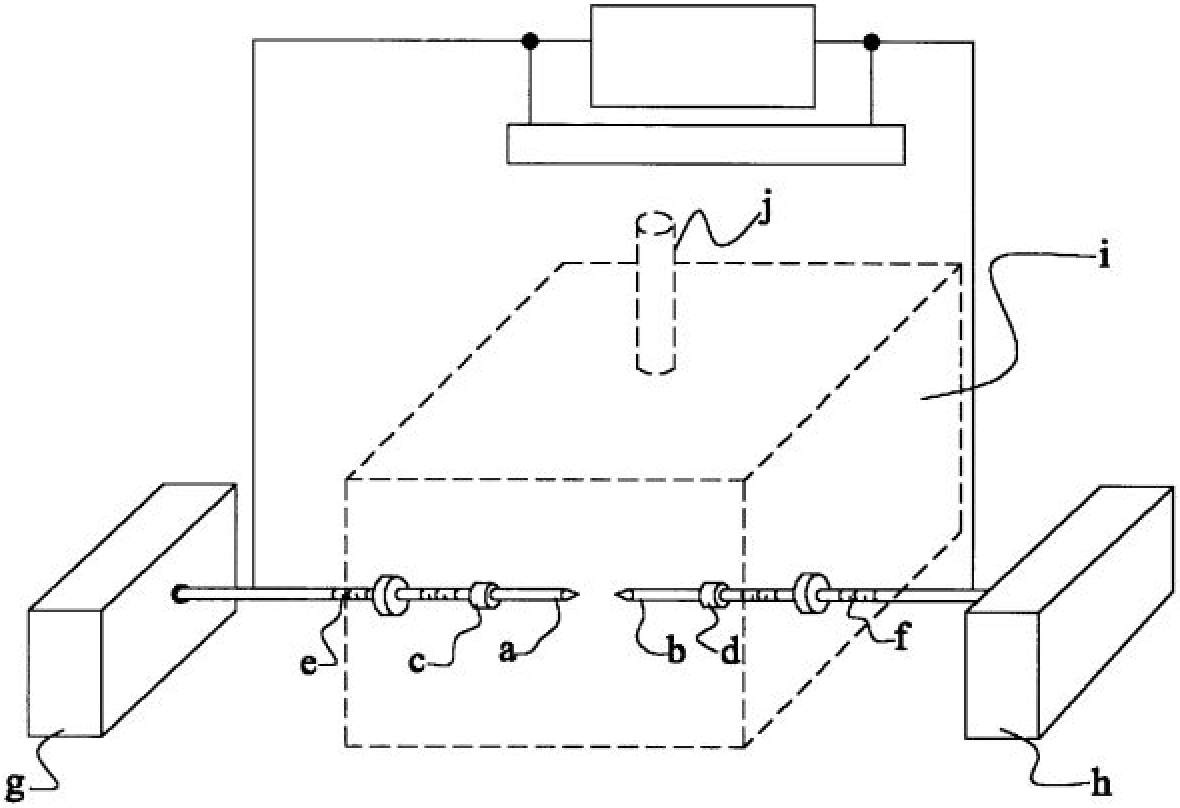

Inventor: George Blankenship. Patent № 6512201 "Fuel cell operated welder" – 2003. (There's another Patent № 6653596 with the same title from this inventor, also dated 2003)

An electric arc welder powered by a plurality of liquid organic fuel cells. The fuel cells use a methanol/water mixture as the organic feed. The fuel cells produce carbon dioxide as a reactive product which is used as a shielding gas during the arc welding process. The fuel cells are stacked together to produce the desired arc voltage and current between an electrode and the work piece. The arc welder includes a welding current to control the current wave shape through the electrode and to control or increase the voltage through the electrode.

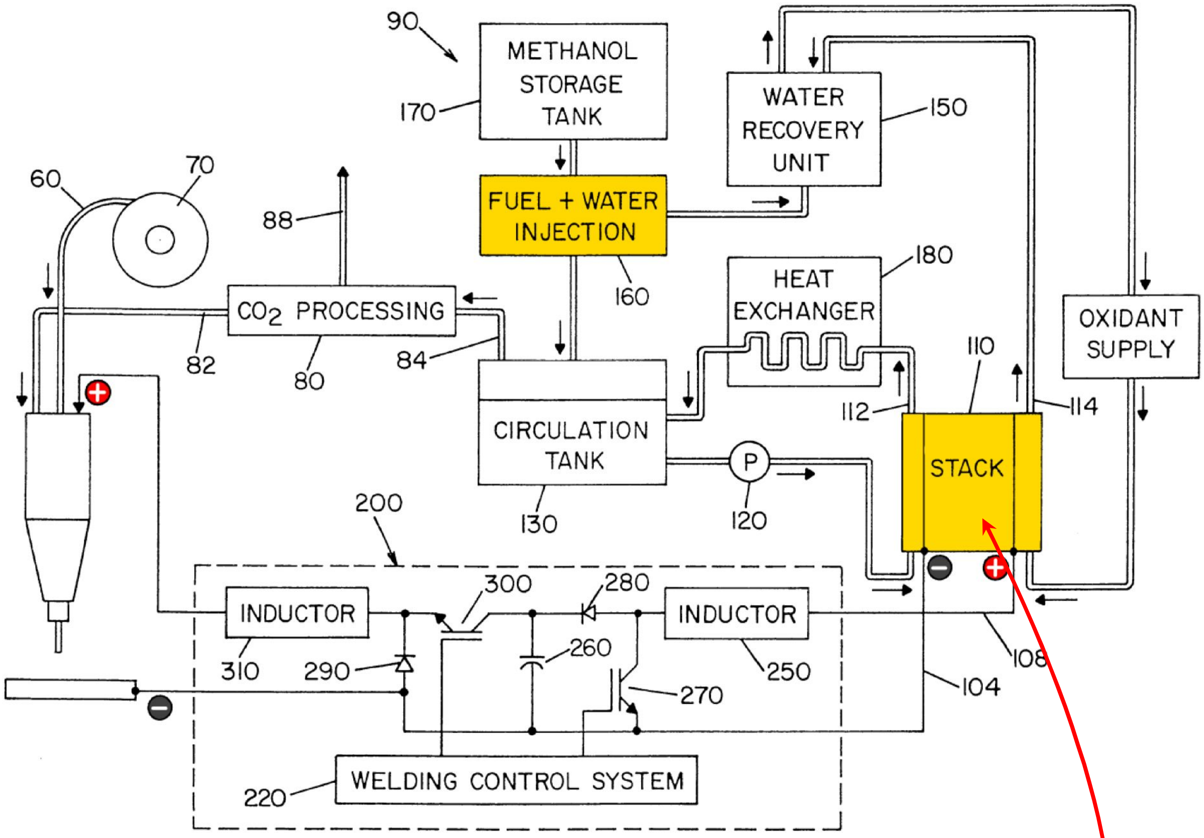

Looking at the welding tip, it may look to a bystander like a normal electric arc welder. However, the bystander may miss the fact that this machine is not connected to any electric supply line! The importance of this invention is in its useage of a special fuel cell stack. This stack uses inputs of WATER with methanol, formaldehyde, formic acid, dimethoxymethane, trimethoxymethane, trioxane and combinations thereof to produce a strong electric current for the welding arc. (~Ozzie)

Remember that these are not the full Patents – for further study into those inventions that interest you, find the full Patents via the research links given in Chapter 20. (~Ozzie)

*Inventor: **Ruggero Maria Santilli**. Patent № 6926872 "Apparatus and method for producing a clean burning combustible gas with long life electrodes and multiple plasma-arc-flows" – 2005*

Apparatus and method for processing crude oil, or oil-base or water-base liquid waste into a clean burning combustible gas via a submerged electric arc between at least one pair of consumable electrodes, which have a geometry permitting the operation for at least one month prior to their replacement, are completely contained inside a pressurized vessel, and have copper holders that are placed at a minimal possible mutual distance so as to minimize the power loss in the propagation of electricity through the electrodes, while having the other dimensions essentially unrestricted to maximize life.

The invention is complemented with three optional recirculating flows substantially through the electric arc: i) a flow of the produced combustible gas; ii) a flow of the liquid feedstock; and iii) a flow of a liquid additive rich in a substance missing in the liquid feedstock for the production of the combustible gas with desired features.

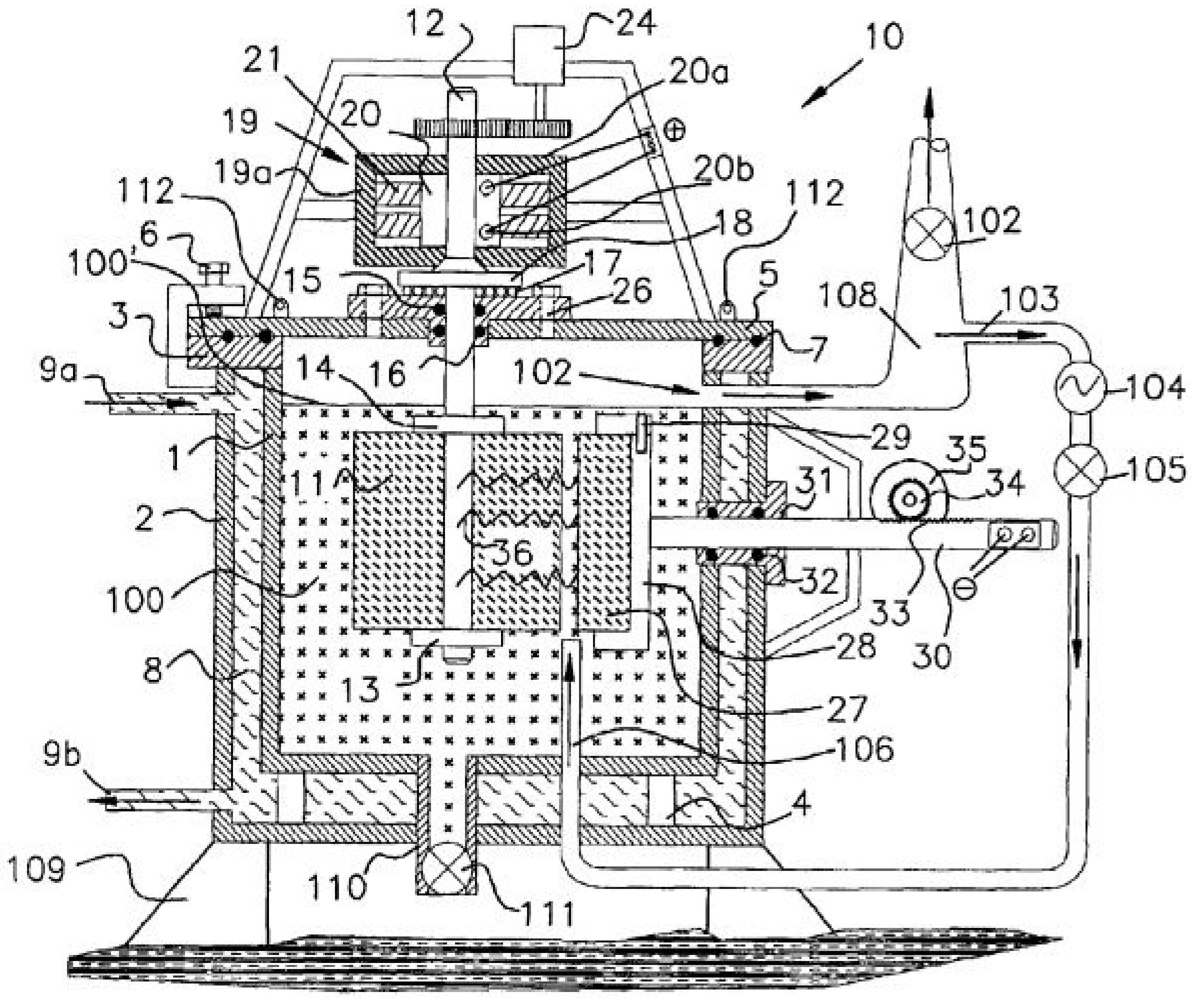

Inventors: Nai Sung Chou, Choi Shiu Sum, Chou Te-Hung, Hui Lin. Patent № 6977120 "Hydrogen/oxygen generating system with temperature control" –2005. Also published as Patent № 6740436 and Worldwide Patent № WO2004019430

A mixed hydrogen-oxygen fuel generator system uses an electrolytic solution to generate gaseous hydrogen-oxygen fuel through the electrolysis of water. This generator system includes: at least one electrolytic cell with multiple metallic plates used as an internal isolation system in which two of the plates separately connect to both the positive and negative terminal of a DC circuit. These plates are used for the electrolysis of the electrolytic solution in the cell(s) to produce, under pressure, mixed hydrogen-oxygen fuel. The apparatus also includes a cooling system containing a water cooling tank in which there are two zones: one is the electrolytic solution circulation coil and the another is a water circulation zone. The cooler provides the circulating, cooling water used to adjust the temperature of the operating cell and of the electrolyte solution to within a given temperature range in order to ensure that the cell is not affected by excessively elevated temperatures that can stop operations due to cell overheating. ***Another effect of this cooling system is to precipitate moisture out of the generated gas*** products. The ignition flame temperature of the gaseous fuel produced can be adjusted for specific applications by passage of the hydrogen/oxygen gas stream through a temperature-control fluid. Thus, continuous 24 hours operation can be achieved along with better gas production efficiency and fuel cell energy generation.

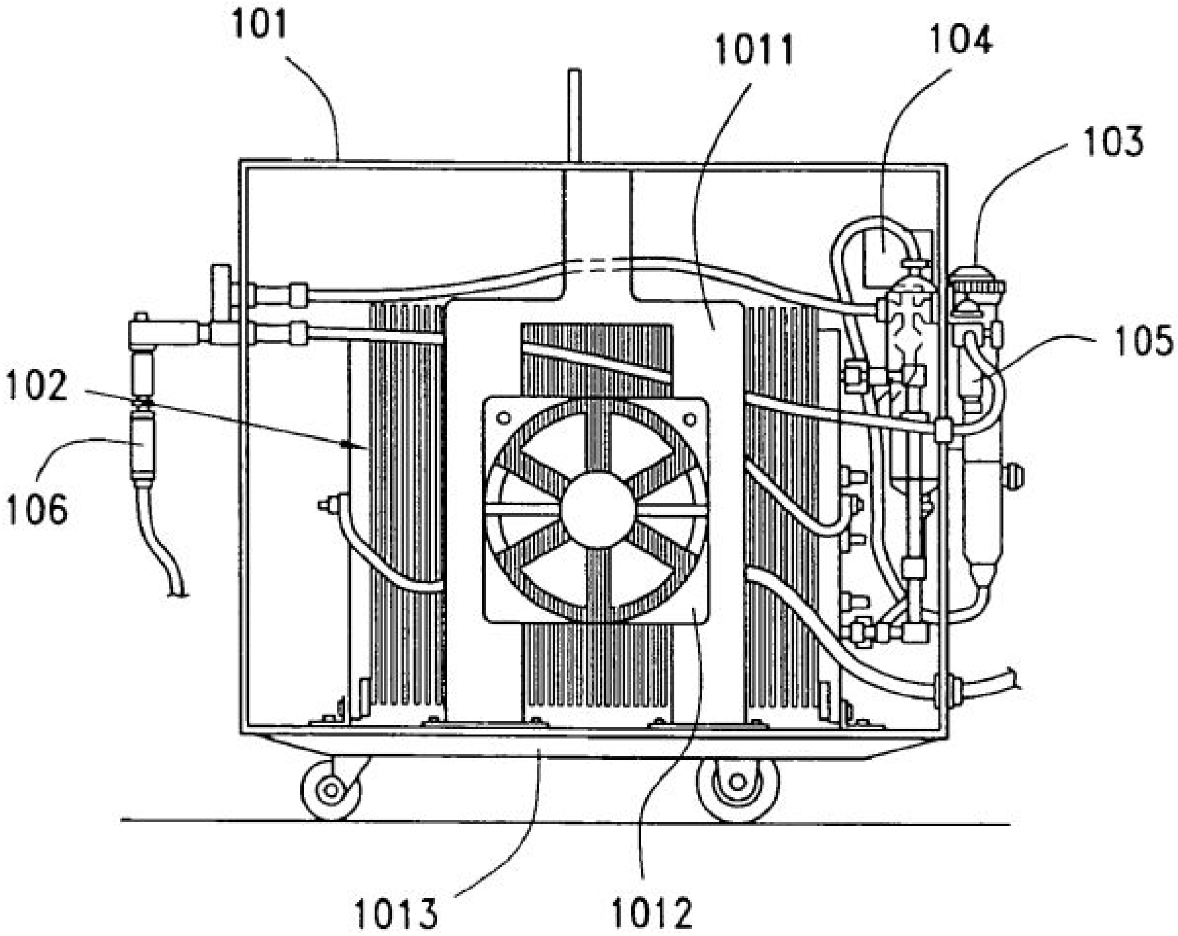

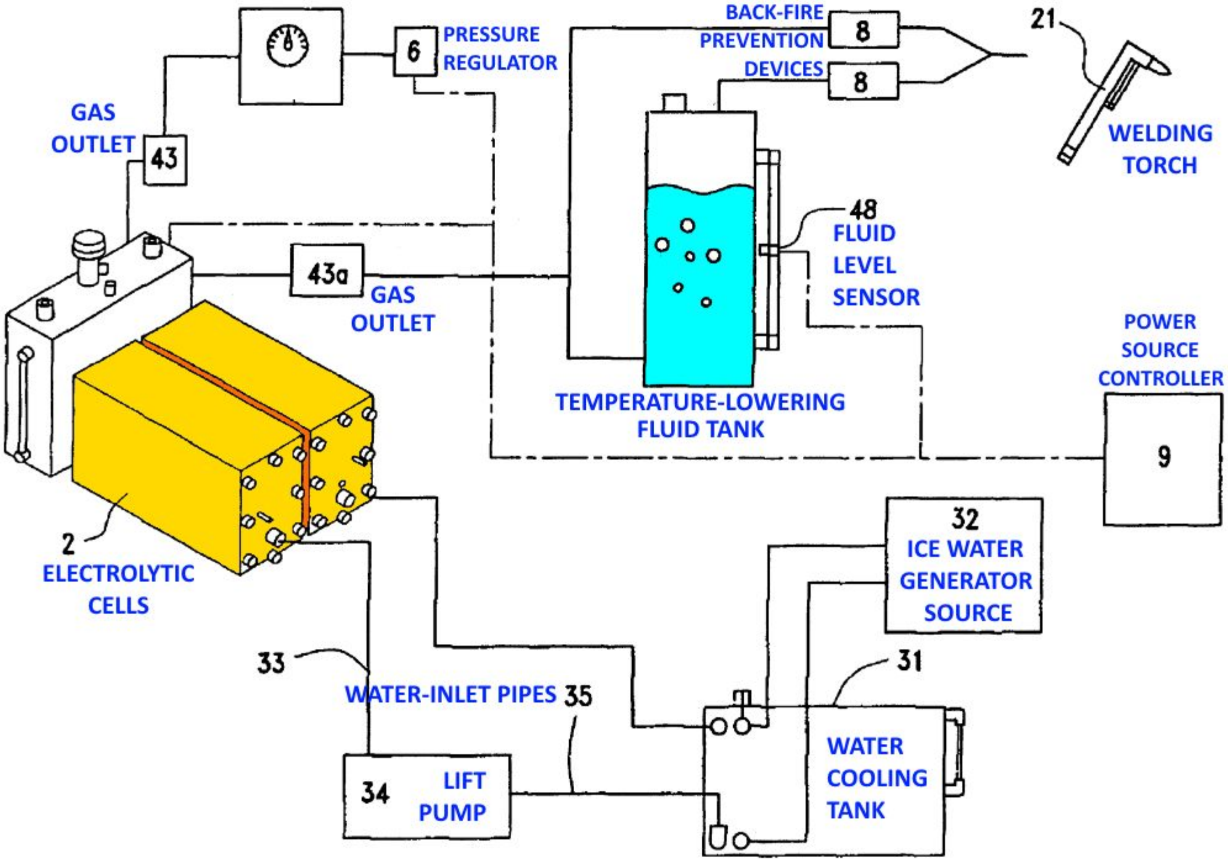
BACK-FIRE
PREVENTION
DEVICES
8
8
21
6
PRESSURE
REGULATOR
GAS
OUTLET
43
WELDING
TORCH
48
FLUID
LEVEL
SENSOR
43a
GAS
OUTLET
POWER
SOURCE
CONTROLLER
TEMPERATURE-LOWERING
FLUID TANK
9
2
ELECTROLYTIC
CELLS
32
ICE WATER
GENERATOR
SOURCE
33
31
WATER-INLET PIPES
35
34
LIFT
PUMP
WATER
COOLING
TANK

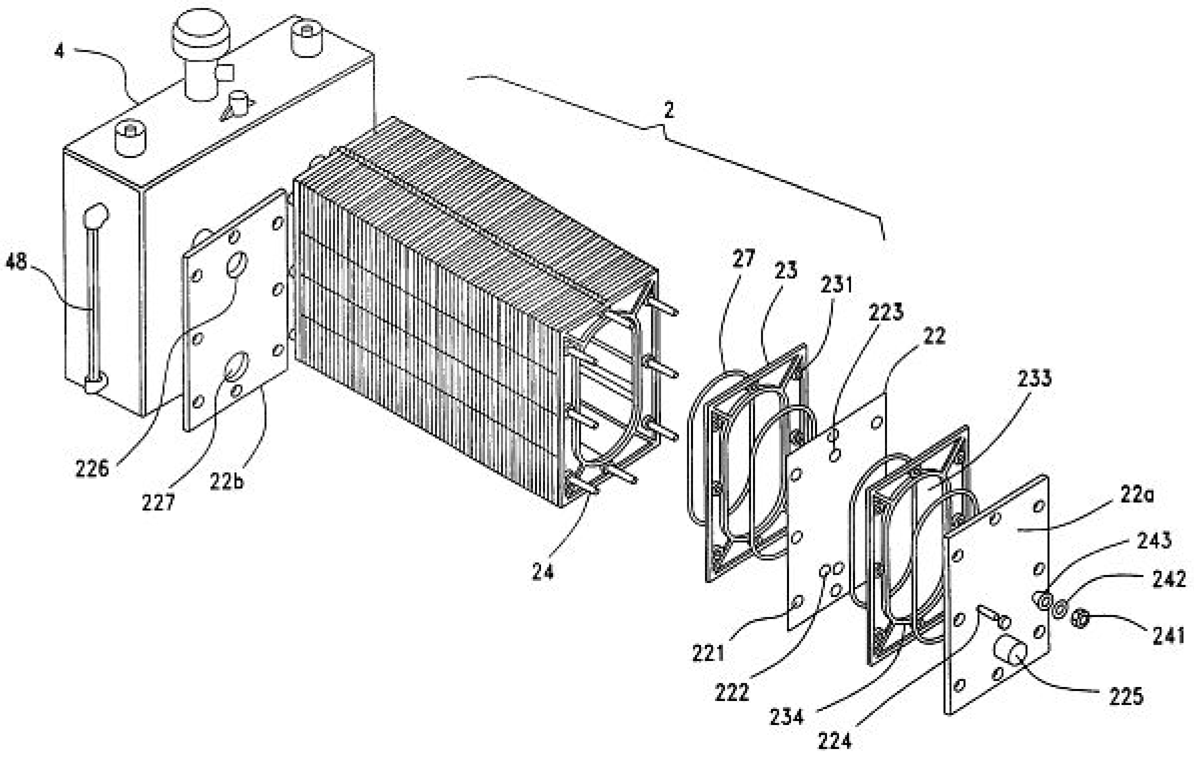
4
2
48
27
23
231
223
22
233
226
227
22b
24
22a
243
242
241
221
222
234
224
225

George Wiseman's Useful Tips Regarding Welding, Cutting and Brazing with Brown's Gas

Sources: FAQ section of www.watertorch.com and the article "WELD IT WITH BROWN'S GAS!" http://www.eagle-research.com/browngas/fabuses/welding.php, both written by George Wiseman (in photo with ER-1200, one of his successful welding machines) of Eagle-Research Ltd., Canada (edited to fit this publication).

About Welding

Q. Have you tried welding cast iron with a piece of cast iron with a different strain of iron than the rod?

A. We can weld any cast iron, cast steel to itself or mild steel using the plain (no flux) cast iron rod. Welds are very strong and have great resistance to breaking due to temperature changes.

Q. When we are ready to weld with a WaterTorch, is it as if we were using a regular welding set up with two tanks supplying gas and oxygen?

A. You do use a regular welding setup, but you do not need to use the oxygen hose or valves (so you just keep them closed), because all the oxygen you need for the flame is already a part of the gas.

The only time you add additional oxygen is when you are actually cutting steel. All other applications like preheating, soldering, brazing annealing, flame drilling, flame polishing, plasma spray, etc. are done with just the gas from the WaterTorch, needing no additional oxygen.

Q. I tried to weld steel, and as you said it can't be done - the flame oxides the metal. Any suggestions for aluminum?

A. You need the flux core aluminum welding rod. It welds aluminum extremely well.

Q. Where can I find Tungsten rod?

A. Welding supply store. Used as welding electrodes. Pure tungsten has a green stripe on one end.

About Flame

Q. At the beginning of working with the ER1200, the flame had a blue/transparent color. After some breaks the flame color was yellow. Is that normal?

A. That is normal, particularly if you are 'overdriving' the machine, using more gas volume than it is producing. It is not harmful to the performance, it just colors the flame.

Q. The flame doesn't have a blue color, what's wrong?

A. The flame will only have a blue color if the hoses and torch, (particularly the tip), are absolutely clean. Otherwise it takes on the color of the impurities. A flame will color with trace impurities. The impurities do not affect the ability of the flame to do work. The impurities are usually a good thing, because they cause the flame to become visible.

Q. Do we need goggles when using the ER1200 up to 5 hours a day?

A. Never for just the flame. You use them if the object heats up to glow brighter than is safe for the eyes. You also use them for safety from flying material, just as you would with any torch.

Q. How do I adjust the flame – size, length, etc.?

A. Choose an appropriate tip for gas volume and 'fine tune' adjust with the torch handle valve.

Q. Is it possible to adjust the flame if I need a "bushy" flame?

A. The flame can be 'spread' by waving it around or by using a 'slotted' orifice tip or by using a multi-orifice tip. The 'key' consideration is that the Brown's Gas must be coming out of the tip orifice faster than the flame is burning back to the orifice.

Q. Does Brown's Gas explode or implode when burned?

A. Brown's Gas in an enclosed area will explode, then implode. In an enclosed area, it requires a very exact situation (nearly impossible to achieve) to implode without an initial explosion. In an enclosed area, the 'burn' goes to detonation velocities (explosion about 5000 meters/sec). During the 'burn' or explosion, the Brown's Gas turns back into water; with a net reduction in volume of 1860 times. The near instant volume reduction causes a vacuum so fast that we label it an 'implosion'. The net result of the explosion-implosion is a vacuum.

Brown's Gas burning in open air (exposed flame) burns at 'burn velocity' of about 7 meters/sec. Since the net result of Brown's Gas burning is a vacuum, you have a long narrow flame (it makes a tunnel in the air). As long as the gas is coming out of the torch faster than the flame is burning back to the torch, the flame won't go into the torch. If the flame goes into the torch, it will be in an enclosed area and the burn will accelerate to detonation velocities; resulting in a 'bang' (explosion) which we call a backfire.

The ERXXXX WaterTorches™ are designed to safely withstand backfires but any explosion is stressful. It is a good idea to use a bubbler so that backfires do not reach the WaterTorch.

About Heat / Temperature

Q. How hot is the flame?

A. It is not 'hot' in a radiant heat sense. I can wave my hand through the flame. It has a very high and laser-like energy. It will melt nearly any material on earth. It puts an 'electrical' energy (in addition to heat energy) into the material, then the material heats up as it tries to get rid of the excess energy.

Q. Can Brown's Gas heat my home?

A. It is not practical to use Brown's Gas as a direct heating fuel because it takes electricity to make Brown's Gas and you could use the electricity to directly heat your home with an inexpensive electric element.

The only practical way to use Brown's Gas to heat is to use it to enhance the combustion of carbon based fuel. Brown's Gas acts as a catalyst to lower the flames 'self-propagation' endothermic[161] energy. This allows more of the flame's potential heat of combustion energy to show up as exothermic[162] energy. Brown's Gas makes the flame hotter.

Q. What temperature range does this torch produce in Fahrenheit?

A. It radiates heat at about 274°F. Brown's Gas's powerful laser-like flame doesn't radiate much heat, because it is more 'electrical' in nature. It will heat and melt nearly any material on earth. It is 'hotter' than acetylene and its temperature can be modified in several different ways.

About PSI

Q. What PSI level should the ER1200 be operated at?

A. Do NOT operate the torch at high pressures, it is not designed for it. If you have a backfire in the machine it will be permanently damaged.

8 PSI is an adequate pressure for any torch that is designed to handle the gas volume the ER1200 produces. More gas pressure DOES NOT mean higher gas production volume.

NOTE: Torch pressures higher than 10 PSI MUST be run through a bubbler to prevent backfire damage. Do NOT EVER exceed 20 PSI for any reason.

---

[161] (Reaction or process) accompanied by or requiring the absorption of heat.

[162] (Reaction or process) that releases energy by light or heat.

Q. After 10 seconds of cutting steel with the ER1200, the pressure of the gas went down to 5 PSI. What happened?

A. You were using more gas volume than the machine was producing. To be sure the ER1200 is actually producing 1200 liters per hour, test the gas volume using the water displacement technique described in the Brown's Gas Book 2 [available from www.eagle-research.com]

Q. Does the machine have an over-pressure relief valve or backup/shutdown of any type?

A. The machine is designed so that a hose will slide off a tube and vent the machine if the pressure rises too high. The resulting volume of gas is insufficient to make a combustible mixture in rooms with even minimal venting.

If the ER1200 continues to operate unattended, it will run out of water and have an internal meltdown. This will cause a short that will pop your fuse or circuit breaker and render the WaterTorch permanently inoperable. We call this 'operator error' and it is not covered under warranty.

The B version ER1200 WaterTorches have an internal float switch to prevent the electrolyzer from running out of water. The machine automatically shuts off if the water level is too low.

About Torch

Q. How many cubic feet of gas will the ER1200 produce?

A. The ER1200 makes 1200 liters of gas per hour. There are 28 liters in a cubic foot. So the ER1200 will make 42.85 cubic feet per hour.

Q. Do you have any experience with micro torches?

A. Yes, they work great. You'll need to 'dry' the gas because water droplets will extinguish the flame in a tiny torch. Use an inline gas dryer that can take the pressures and temperatures associated with a backfire. Most micro torches do not require a very high Brown's Gas pressure, so backfire pressure spikes are minimal.

Q. How many torches will the ER1200 operate at the same time?

A. That depends on the volume of gas each torch is using. Typically, it'll replace the acetylene used by a single oxy-acetylene torch when cutting. It'll run 2 'welding' torches when used for brazing and 10 torches when used for soldering.

Q. I would like to hook up 2 torches to the ER1200. Should I add another bubbler and a torch tying it into the existing bubbler?

A. Adding another bubbler is a good idea because it will help prevent a backfire at one torch from seriously affecting the flame at another torch. Put a 'Y' at the ER1200 and put a hose to each torch, preferably through a bubbler for each torch. The type of 'Y' we use has a valve on each 'torch' leg and is commonly available at welding supply shops.

About Cutting and Torch Tips

Q. We tried to cut several items and the process is very slow. Why does it seems to melt them not cut them?

A. Think of the Brown's Gas flame as a 'super' torch. Anything a torch will do, a Brown's Gas torch will do better. You'll find that if you compare the Brown's Gas directly with your conventional fuel-gas, that the Brown's Gas cuts (and melts) faster. Brown's Gas won't 'cut' what conventional fuel-gasses won't cut (like a rock). Regular torches barely melt rock; the Brown's Gas torch melts rock better than any torch in the world.

Conventional torches are generally used for two types of cutting, flame cutting and oxygen assist cutting.

Flame cutting is usually used for thin materials with no oxygen assist. Brown's Gas is a superior flame cutting gas. It allows pin point precision and will bore through nearly any material on earth.

Oxygen assist cutting is generally used only on metals that contain a significant percentage of iron. This is because the oxygen actually causes the iron to oxidize (burn). Brown's Gas is a superior fuel-gas for cutting because it contains a significant portion of 'new' (or radical) oxygen which oxidizes iron faster than bottled oxygen. The Brown's Gas flame cuts iron about 25% faster than any other conventional fuel-gas (also using 30% less oxygen) and it makes a precision cut without overheating the iron.

Q. What size torch tip should be used to cut rusted steel?

A. We recommend to remove any rust. If you are cutting rusty iron, the Brown's Gas will do it more reliably and with less spitting, popping and missed cuts than conventional fuel-gas.

We recommend using 'flush' type tips. 'Recessed' tips will heat up because the flame will touch the metal.

Assuming you are using the Victor brand of torch: Use a #0 torch-cutting tip for up to 1 inch of steel (sometimes thicker). A #2 tip should be good to cut at least 4 inches of steel which is the maximum recommended depth for the ER1200. Even then we recommend the extra capacitor option.

Q. Can I speed up the time it takes to preheat steel cutting?

A. The volume of gas makes a big difference on preheat time. At 2000 L/h, it preheats faster than oxy-acetylene. A notch with a chisel helps by making an edge that will preheat faster.

There is a fine point when the metal is first ready, if it is missed, then it oxidizes and takes a LOT more heat to melt the oxidized layer, which Brown's Gas can do.

You do want a lot of volume to preheat fast, but only a little volume to actually cut. Brown's Gas allows the best of both world's with what we call a 'preheat' apparatus. This is a valve assembly that allows a huge volume of gas for fast preheat (preheats twice as fast as acetylene), then cuts back to efficient volume for the actual cut. We provide the plans to assemble a pre-heat apparatus to customers who have bought one of our WaterTorches and request the plans.

Q. Is slag produced with Brown's Gas as with oxy-acetylene cutting?

A. Similar technique, no or almost no slag. Slag or 'dross' is made when there is too hot a flame for the material being cut.

Q. What can I do about too much slag when cutting steel?

A. Too much slag means the cut is too hot. Too much fuel gas or moving too slow are the most common causes. You must either use less volume of gas, a smaller torch tip or hold the torch higher off the steel. Brown's Gas is best in thick steel. Another 'trick' is to angle the cut so that the torch is cutting through more (thicker) material.

Q. When do I add oxygen to cut steel?

A. You have to wait for the steel (iron) to be at oxidation/ignition temperature. Usually this is when a few little sparks are flying out. If you add oxygen too soon, it will 'cool' the iron, instead of causing it to burn.

Q. What pressure should the oxygen be set at?

A. Same pressures you'd normally use for acetylene.

Q. I know that the Brown's Gas can melt metal; is the oxygen or air simply needed to blow the molten metal out of the way?

A. Common misconception. The fuel-gas simply brings the steel up to oxidation temperature. Adding oxygen at this temperature causes the steel to literally burn (oxidize). So the oxygen actually is doing the 'cutting'. You do want to use enough oxygen pressure so the gas velocity removes the molten slag as you are burning through the steel.

Brown's Gas is slightly different than ALL other fuel gasses because the oxygen it contains is "new" (very reactive) and causes the steel oxidation to take place at least 25% faster.

Q. Have you tried to use compressed air in conjunction with the Water Torch instead of oxygen?

A. Yes we have. Too much nitrogen in air and it cools the cut to below combustion temperature. The oxygen is required to cause the iron to 'burn' (oxidize quickly) that's how you cut iron with oxy-fuel. The fuel gas heats up the iron to the ignition point, then the oxygen actually allows (a portion of) the steel to burn, creating the heat to melt the rest of the steel.

With conventional fuel gasses, you could shut off the fuel-gas once the cut is started and it will continue at about the same speed. With Brown's Gas, if you shut off the Brown's Gas, your cutting speed will be reduced by 25%, to 'normal' cutting speed.

Q. Can Brown's Gas cut without oxygen?

A. You can cut thin metal with no oxygen, but above about 1/8" thickness we recommend oxygen assist. Brown's Gas uses about 40% less oxygen, than other fuel gasses, during cutting. This is because Brown's Gas doesn't need oxygen in the pre-heat flame, uses a smaller torch tip (less kerf[163]) for cutting any given thickness of metal and cuts 25% faster.

Q. What cutting operations can Brown's Gas be used for?

A. Brown's Gas only 'cuts' iron, using the same equipment and techniques as any other fuel-gas. It does cut about 25% faster and the cut is of higher quality. The cost of cutting is significantly reduced, not only because Brown's Gas is less expensive but because labor time is reduced.

Q. How does cutting with Brown's Gas compare to plasma?

A. Not as fast in thinner metal, break even about 0.75" thick. Much faster in thick metal. Practically zero consumables and torch maintenance. Considerably less electricity required. Can only cut iron.

Q. How does Brown's Gas compare with laser cutting of metals?

A. Not as fast in thinner metal, break even about 0.25" thick. Much faster in thick metal. Can only cut iron.

Q. How fine a kerf is possible when cutting with Brown's gas?

A. Finer than all other oxy-fuel cutting. Because of the laser-like flame, you can use smaller tips to cut the same thickness of metal. Smaller tips also use less oxygen to cut the same thickness of metal.

Q. Is anyone else having problems cutting steel?

A. No one that knows how to use a conventional torch has problems cutting steel with Brown's Gas. Try to find someone with expert cutting skills, to teach you.

There are a few things that are a little different, like:

1) Holding the torch higher, because the flame cones are longer, and
2) Do not to add preheat oxygen to the flame, because the Brown's Gas already has all the oxygen it needs to burn. Keep the preheat oxygen valve shut off. Except for torch cutting, there is seldom any need to use bottled oxygen.

Q. While cutting iron, what would cause the flame to keep blowing out?

A. Either the Brown's Gas or the oxygen pressure is set too high.

Q. Is oxygen required for cutting all ferric containing metals?

A. Yes, but thin metals (of all kinds) can be cut without oxygen.

---

[163] The width removed by the cutting process. In most cases, less kerf is preferable.

About Brazing

Q. With the Brown's Gas, it is not possible to reduce the flow of oxygen to prevent oxidation when brazing. Is there a solution?

A. Yes:

1. First, in most cases, the Brown's Gas brazes exceptionally well with no modification whatsoever. I have never had the need to modify the flame (reduce oxygen content) in my own shop. My braze and solder joints are not oxidized. I can braze far faster and easier with Brown's Gas than I ever could using any of the carbon-based fuel gasses.
2. Second, if you do choose to reduce the oxygen content of the Brown's Gas, that is one of the uses for the bubbler. If you put a carbon based fluid like alcohol or Diesel in the bubbler, it will use up some of the oxygen as they burn, making it unavailable to 'oxidize' the work. This also makes the flame 'cooler' or less able to do work.

Q. Does the modifier fluid have to be renewed/replaced and, if so, at what intervals?

A. Yes but not often. You'd have to experiment for your application. Depth of fluid makes a difference of how much vapors are produced. You can put valves on the bubbler to adjust how much of the Brown's Gas flows through it; thus having an 'infinite' adjustment on flame modification. If using Diesel, vapors get less as the fluid 'goes dead'. I recommend changing the fluid about every four hours of use.

Q. What does an oxygen bottle have to do with modifiers from a modifier tank?

A. When you add carbon-based fuel vapors to the Brown's Gas, you may need to add some additional oxygen to burn them. You add it in the conventional method, using the oxygen portion of your torch set. How much you need (if any) is a matter of experimentation in your process.

About Jewelry

Q. I work with gold and silver. Can I use Brown's Gas to make jewelry?

A. Brown's Gas has been used by jewelers for over 30 years (those ones who have found out about it), as the gas of choice. It is a trade secret because any jeweler who uses Brown's Gas has a competitive advantage.

It solders, welds, brazes, preheats, plasma spray, anneals, etc. better than any other fuel-gas. It is EXTREMELY precise and has minimal heating of nearby components.

Brown's Gas is not in widespread use because (until now) the machines were expensive, inefficient and poorly marketed. Our ERXXXX WaterTorch technology is half the price, very efficient and we are working out the best marketing plan Brown's Gas has ever seen.

Q. When trying to melt some amethyst crystals from a geode sample, why did they just split, crack and pop?

A. Crystals need to be heated VERY slowly. I found this problem with opals too.

Generally, Brown's Gas is much more forgiving when used on materials that normally split, crack and pop. I've even heated a rock under water without it exploding from the steam formation. Note: Take care when doing this type of dangerous experiment, use proper safety procedures.

Q. How long do you hold the flame on feldspar to turn it into transparent moonstone?

A. That depends on the quantity of the flame, the quality of the feldspar and the size of the sample. A 6mm (1/4") sized sample of high quality feldspar will "cook" down in about 10-20 minutes with 1200 l/h.

Brown's Gas is the only gas in the world that will allow you to shape the semiprecious material into any shape you desire and purify it at the same time.

Q. The time to treat corundum (to make rubies) is 8-12 hours nonstop at 1800-2000 degrees Celsius. Can an ER1200 WaterTorch produce nonstop at the required temperature?

A. Any of our WaterTorches can produce that temperature. The ER1200 WaterTorch can produce 1200 liters per hour continuous duty. Continuous duty means nonstop. Our WaterTorches are designed so water can be added while operating.

What other materials can be welded?

• Glass

Brown's Gas works great to weld glass.

• Quartz

Brown's Gas works very well on quartz, actually better than anything I've seen. Quartz requires very high energies to melt it. Anyone working with quartz should look into this gas. This would be a low cost alternative to the traditional use of liquid hydrogen and oxygen.

A company I know in Colorado uses $100,000 worth of liquid hydrogen and oxygen a month to make quartzware. With Brown's Gas the cost of the fuel would be cut by at least 75% and the storage of pure water is a lot easier than the cryogenic temperatures of liquid hydrogen and oxygen. Further, there would be no transportation danger (of the fuel). And Brown's Gas has up to 3.8 times more energy potential than conventional di-atomic gas, so you get more work done with a smaller flame.

• Cast Iron

A welding torch (#3 tip) was able to make a nice puddle and easily welded cast iron. I was just melting it together with no flux of any kind using cast iron welding rod, using the puddle method. I then took the glowing cast iron that I'd just welded and DUMPED it into water (room temperature). It DID NOT BREAK. After it had cooled down, I broke it to look at the weld; it looked perfect! I couldn't see a difference between crystal structure of the weld and the 'parent' metal.

• Copper

The Brown's Gas easily welds copper, using plain copper rod, no flux. I just used the "puddle" method. Copper sheds its heat so quickly though that you need a fairly good sized flame, and/or insulate the areas of the copper that you are not actually welding. The surface of the copper turns black (copper di-oxide) but otherwise seems great! Di-oxide brushes off.

• Aluminum

I have gotten excellent welds with aluminum, using the type of rod that has the flux inside it. Again, the Brown's Gas provides so much energy in a pin-point fashion that welding aluminum is easier than using oxy-acetylene.

About Brown's Gas Storage / Transportation

Q. Can Brown's Gas be stored for a long period of time, if so, under what conditions?

A. Brown's Gas can be stored, if low pressure and cool (at this time I do not recommend over 20 PSI at 70°F) in the absence of light. Light causes the Brown's Gas to devolve (loses energy and volume).

The gas will self-explode/implode at some given temperature, depending on the pressure (and vice versa); the higher the temperature, the lower the possible storage pressure. This presupposes that you are using an inert storage container with no sharp edges and not having static charges or magnetic fields associated with the stored gas (additional conditions that will cause the Brown's Gas to explode/implode).

Q. Is it possible to ship Brown’s Gas similar to the way that natural gas is bottled and shipped?

A. Possible, but difficult and impractical. First it has hydrogen in the mixture, which will leak out of most containers, making the gas you get less Brown’s Gas than what was sent. Second, it is a hydrogen-oxygen mixture, so it is an explosive mixture and subject to explosive materials laws. Third, it can only be stored at low pressure so very little gas can be in the container.

It is best to generate all the volume you need right at your location and as you need it.

Demonstrations

All the above are good words but, still, just words. Try to see a live demonstration in your area. And if you can’t get any yet, start by watching these videos:

1) Welding Efficiency/ Quality/Speed/Safety

Demonstrations of how WELL, FAST and SAFE Brown’s Gas can weld, by tech experts Chuck Byerly, Denny Klein, Donald Wann and others:

https://www.youtube.com/watch?v=2xHvEsUv0wg

2) Brown’s Gas Water Torch Research & Applications

Lectures by Brown’s Gas top expert Mr. George Wiseman: www.youtube.com/watch?v=E-dca5fVLTM

3) Also search YouTube and Vimeo for [HHO welding] and [Brown Gas welding]

Finally, this chapter will not be complete without mentioning MagnaGas Corporation from Clearwater, California, that sells welding gas (not gas generators) named MagnaGas™. Their gas is produced from water by Plasma-Arc Technology rather than by regular electrolysis. Based on Santilli – see Chapter 7. The company also offers mobile welding/cutting equipment and waste/sewage sterilization equipment based on the special capabilities of MagnaGas™. To see their product range and to better understand this tech visit: http://magnegas.com/magnegas/

Chapter 24. **Mix Water with Fuel (and Get Away with It)**

Here is a *partial* list of ***mix-water-with-fuel-and-get-away-with-it*** inventions from around the world, well known to their governments for decades:

Application or Patent №	Title	Inventor	Year
3648714	Process and apparatus for automatically controlling a mixture of two fluids	Laveau (France)	1972
3741712	Supply system for a light hydrocarbon-water emulsion burner	Delatronchette (France)	1973
3749318	Combustion method & apparatus burning an intimate emulsion of fuel and water	Cotell	1973
3766942	System for supplying an emulsion of liquid fuel and water to a heating burner	Delatronchette (France)	1973
3876363	Atomizing method and apparatus	Lahaye	1975
3901644	Burning fuel oil burning system	Armas	1975
4144015	Combustion process	Berthiaume	1979
4416610	Water-in-oil emulsifier & oil-burner boiler system incorporating such emulsifier	Gallagher, jr.	1983
4430054	Oil-water mixing and supplying system	Furuya (Japan)	1984
4443180	Variable firing rate oil burner using aeration throttling	Lefrois	1984
4519769	Apparatus and method for the combustion of water-in-oil emulsion fuels	Tanaka (Japan)	1985
4688550	Means and preparation process, for burning, of an emulsion containing water and heavy oil	Lopes (Brazil)	1987
4801304	Process for the production and burning of a natural-emulsified liquid fuel	Polanco, Layrisse, Rivas, Jimenez, De Paz, Salazar, Rivero, Guevara, Chirinos (Venezuela)	1989
5000757	Preparation and combustion of fuel oil emulsions	Puttock, Somerville (UK)	1991
5249957	Emulsion producing apparatus and its combustion system	Hirata (Japan)	1993
20030226312	Aqueous additives in hydrocarbonaceous fuel combustion systems	Roos, Cunningham, Guinther	2003
20050028433	Combustible mixture modifier	Bolotov, Nogai (Kazakhstan)	2005
20060048443	Emulsified water-blended fuel compositions	Filippini, Sweet, Steckel, Mullay, Ray	2006

American Patent: Sophisticated system mixes quantities of water and fuel – next to the engine

Inventors: Victor Gurin, Mindaugas Macijauskas, Pavel Pikul, Serguei Permiakov. Int'l Patent App. № WO-2013169669A1 "Method and system for water-fuel emulsions production" – 2013. Also published as US-20150152346, EP-2847303A1.

Water-fuel emulsions can be used in engines, predominantly in Diesel engines, to achieve considerable fuel economy and reduce emissions of noxious exhaust components, NO_x, CO_2 and soot. However, the emulsion combustion technology for engines of power units has not been applied widely since the main two components are immiscible; water separates and causes corrosion in pumps, injectors, regulators and so on. In order to improve mixing, special emulsifiers are applied, but in this option emulsion does not sustain long. Proposed new emulsion making technology uses simultaneous dissolution of highly soluble gases CO_2 and CH_4 in immiscible components fuel and water.

Tests demonstrate that water-fuel emulsion produced using the new technology retains stability when exposed to temperature and at long-term storage in the open air.

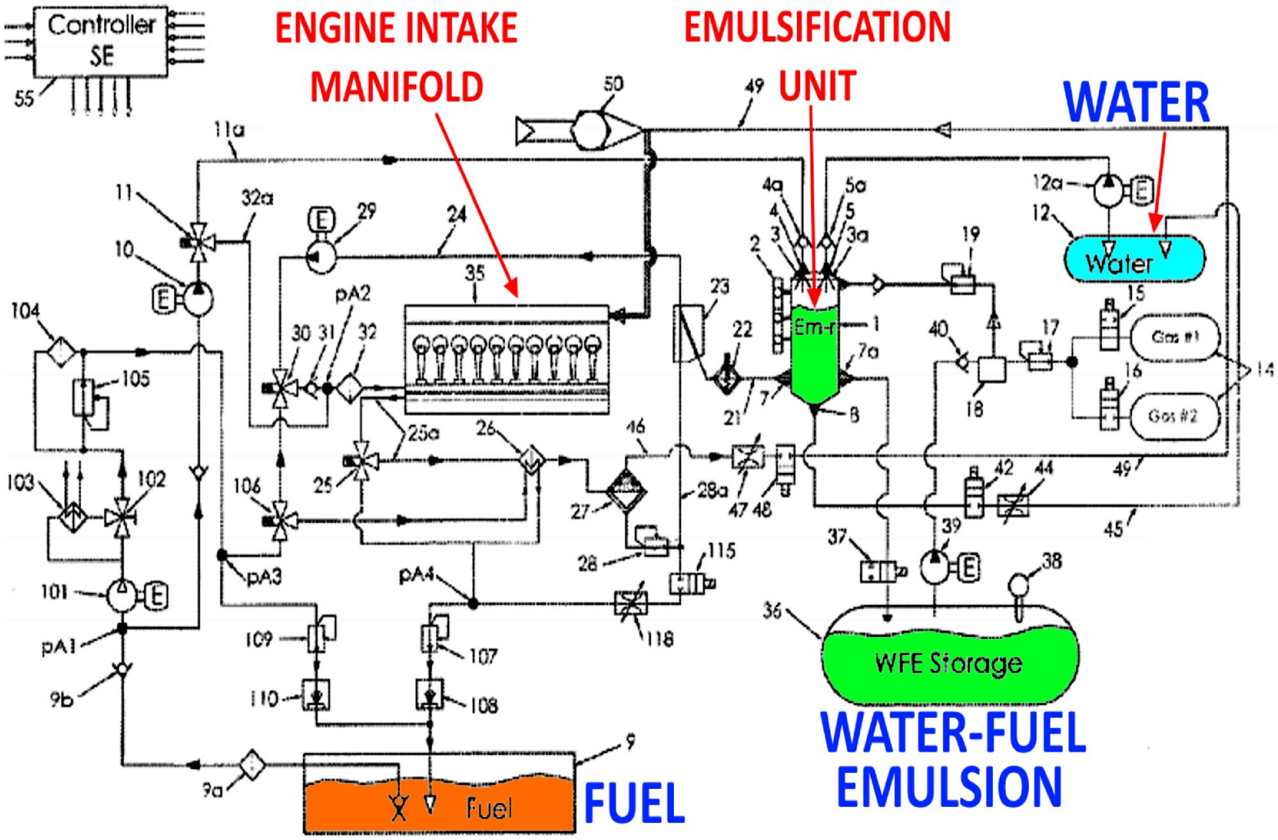

Dutch Patent: Use LIQUID WATER as fuel — without electrolysis

- Title: “WATER CONTAINING CAR FUEL”
- Application Number: 2008/0172928
- Inventors: Hendrik Loggers, (Amerongen, The Netherlands); Gijsbert Versteeg, (Nunspeet, The Netherlands)
- Dated: July 2008 (filed in December 2007)
- **Download:** http://www.google.ch/patents/US20080172928
- And the corresponding Great Britain Patent: http://www.ipo.gov.uk/p-find-publication-getZIP.zip?PatentNo=GB2446488&DocType=A&JournalNumber=6221

ABSTRACT: Emulsions of mineral automobile fuel, such as gasoline and Diesel oil, and containing **at least** 77 percent by weight of water, are described as a usable motor fuel. When vegetable oil is worked into the mixture, the automotive fuel can contain a percentage of water that can vary over a wide range. The advantages in using fuel mixtures are lower fuel consumption, lower CO_2 emissions, affordable automobile fuel, and a lengthening of the period for which the increasingly scarce reserves of mineral oil will be available.

Claims:

1. Emulsions of water and fuel, such as gasoline, Diesel oil, and oil, can be used as fuels in motors, with the characteristic that the water content is more than 77 percent of the total weight of the emulsion.

2. An emulsified mixture of water, a mineral automotive fuel and a vegetable oil can be used as an automotive fuel.

BACKGROUND OF THE INVENTION

Field of the Invention: The present invention relates to an emulsion of water, a car fuel, such as petrol, Diesel oil or a type of vegetable oil and an emulsifier. Emulsions can be used as a new car fuel and may contain at least 77 percent water by weight.

Brief Summary of the Invention: Object of the invention is to provide a payable car fuel that pollutes less than the usual fuels, to be realised by mixing water, at least in an amount up to 77 percent of the mixture weight, a usual car fuel and an emulsifier.

DETAILED DESCRIPTION OF THE INVENTION

This invention concerns an emulsified mixture of water with a motor fuel such as gasoline or Diesel, and also concerns an emulsified mixture of vegetable oil. Emulsions can be used as motor fuels. The addition of water to gasoline is known in the United States where the fluid known as “dry-gas” is added to the gasoline to mix the water present in the tank with the gasoline to form a useable fuel. This concerns only small quantities of water.

The Austrian patent in the name of Gerhard Auer Int. WO 95/25154, predominately describes the creation of alcohol-water and gasoline-Diesel-water emulsions containing less than ***70% water by volume***.

Furthermore, the American patent U.S. 2004/0121202 A1 gives the compositions[164] of emulsions for improving fuel cell functioning.

The American patent U.S. 2004/0005622 A1 describes an emulsion that improves the combustion of carbon particles. It has been shown experimentally that mixtures containing by weight only 20 percent conventional mineral automobile fuel and 80 percent water can be used as automobile fuels.

Characteristic of the emulsions according to this invention is also that the quantity of fuel can be as low as 23 percent of the total weight of water and fuel, which means that the water forms more than 77 percent.

When vegetable oil is mixed with mineral fuel water and emulsifier, the percentage can vary over a wide range.

An example of a successful automotive fuel combination is an emulsion consisting of 10.7 percent gasoline, 19.3 percent vegetable oil and 70 percent water. Mixtures with more vegetable oil are also suitable for using as a motor fuel. Assuming that gasoline, octane, has a carbon content of 82%, this implies that the amount of CO_2 emitted by the mixture is only 324 grams per kilogram of emulsion. This is a 90% reduction of emissions compared to the use of gasoline alone.

Emulsions that separate can be reconverted to homogeneous fuel by stirring or shaking.

Assuming a mixture of 80% water and 20% gasoline, leads to the estimate that the engine cylinder pressure can rise to more than 80 kg/cm^2. This is higher than the pressure occurring in normal gasoline engines. However, the ignition temperature is lower than in gasoline engines.

The advantages in using fuel mixtures are lower fuel consumption, lower CO_2 emissions, affordable automobile fuel, and longer use of the increasingly scarce oil reserves.

FOR FURTHER STUDY: The British version of the Patent above, published on August 13, 2008, cites references to the following US and international Patents:

GB 1585232 A
WO 1999/031204 A1
WO 1995/025154 A3
US 20040121202 A1
GB 0331966 A
WO 1995/027021 A1
US 20050183324 A1
US 20030005622 A1

---

[164] They suggest between 30% and 60% of water, by weight. Download the complete formulas from www.freepatentsonline.com/y2004/0121202.html

Australian Patent: Build a WATER-ONLY Engine (no carbohydrate fuel)

- Title: ENGINE
- Application Number: 2008/0216793
- Inventor: Albert Henry Bow (Milperra, Australia)
- Dated: September 2008 (filed Nov. 2006)
- Download URL: http://www.freepatentsonline.com/y2008/0216793.html

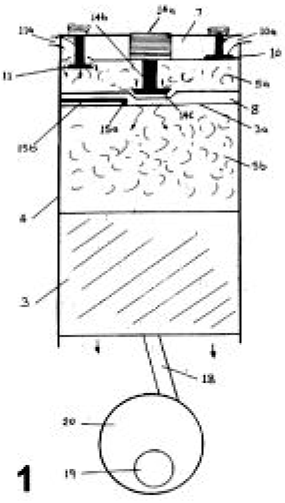

1

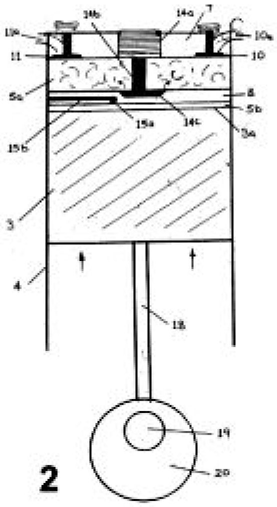

2

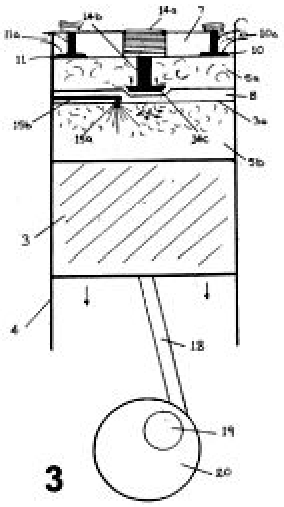

3

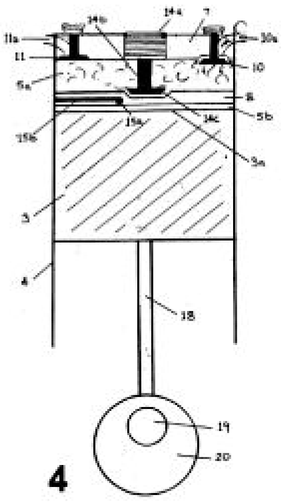

4

ABSTRACT (abridged): The present invention relates to engines and in particular, engines which utilize water or steam. Attempts have been made to address the problems associated with prior art combustion engines which use fossil fuels. For instance, [Australian] Application PCT/AU2005/000770 (WO2005/119015) describes an environmentally-friendly prior art piston engine which is powered by the controlled expansion and contraction of water vapor. The prior art invention described therein uses a piston to rapidly compress air into a receptacle located at the top of a cylinder chamber during an upstroke cycle in order to raise the temperature of the air to around 500°C. The heated air in the receptacle is later released so that it can interact with water vapor and/or Hydrogen which has been subsequently supplied into the cylinder so that a controlled expansion of the water vapor and Hydrogen may take place.

[This invention describes] a method for use in controllably generating mechanical power from a piston engine without combusting fuel, wherein the piston engine includes: a piston; a cylinder having an upper chamber and a lower chamber separated by a partition, the partition including an opening and a partition valve located adjacent the opening; a first supply means adapted for supplying air in to at least one of the upper and lower chambers; and a second supply means adapted for supplying at least one of water vapor and Hydrogen in to the lower chamber; ---opening the partition valve when the lower chamber is at a relative minimum volume wherein, the heated air disposed in the upper chamber is released into the lower chamber via the opened partition valve, and the water vapor and/or Hydrogen in the lower chamber is caused to expand upon interaction with the heated air so as to force outward movement of the piston from the cylinder, whereby the lower chamber is adjusted from the relative minimum volume into the relative maximum volume.

Japanese Patent: Burn a Water/Fuel Emulsion using Brown's Gas (*76% saved* in experiment)

As mentioned earlier, Dr. Uyehara presented a technical paper at the *Diesel Engine Emission Reduction Workshop* at the University of California, San Diego, June 25, 1995, in which he claimed that the mixture of ionized water and fuel oil (with a ratio of 52% and 48%, respectively – but in this Patent they mention ratios as high as 90% water!!!) can be burned without air and the thermal efficiency would be 230% that of air/fuel system for the same combustor-heat transfer layout.

Here is their US Patent № 6,012,915 that reveals how they did it – ***using freshly made Brown's Gas as the ideal igniter!***

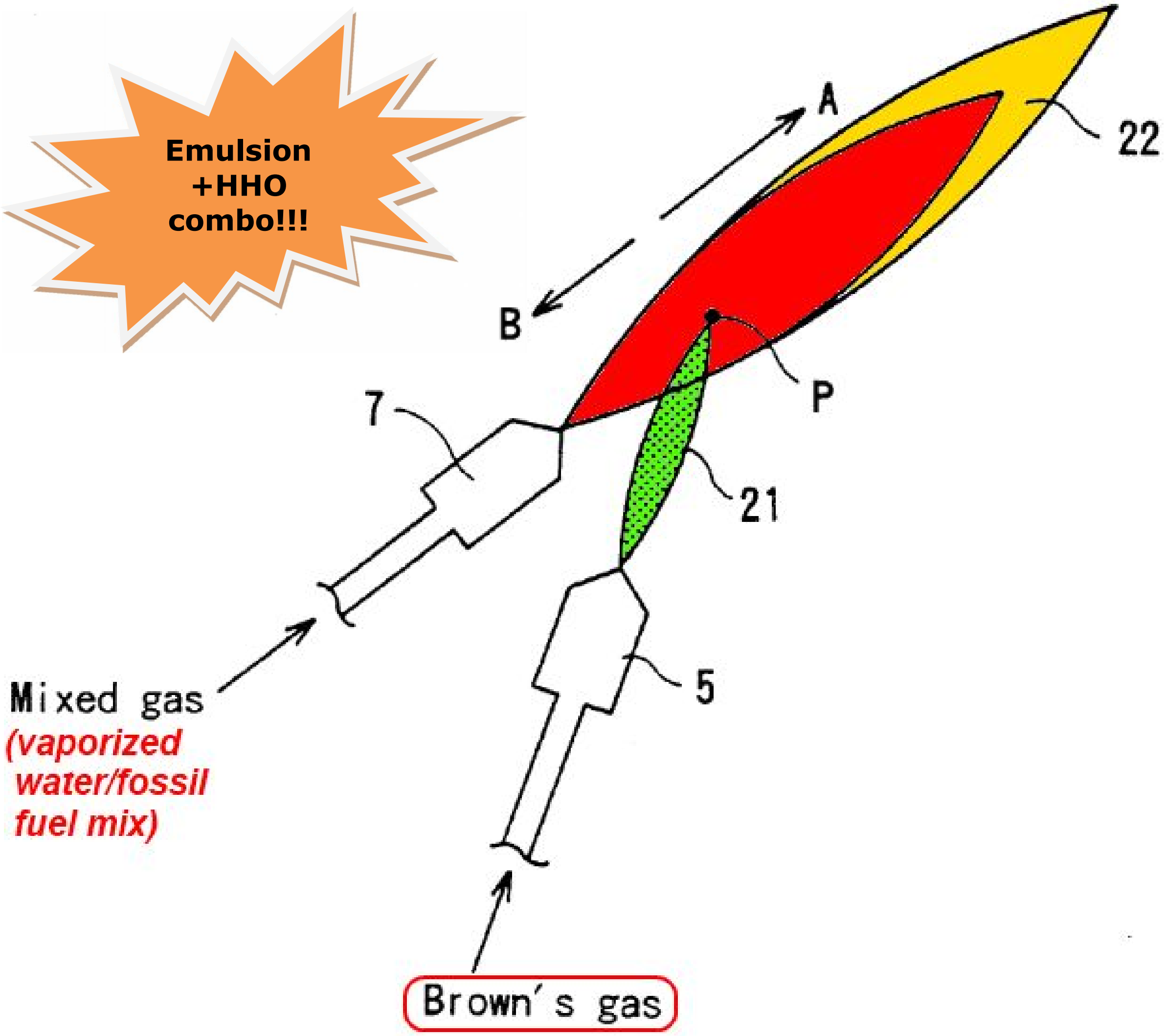

Details of the invention

- Inventors: Masahiro Mori and Toshiyasu Satoh (Hiratsuka, Japan)
- United States Patent № 6012915.
- Filed: Feb. 1998. Published: Nov. 2000.
- Assigned to the following companies:
  --Zenshin Electric Power Engineering Company, Ltd. (Hiratsuka, Japan)
  --Tadashi, Miyamoto (Tokyo, Japan).
- Download the complete Patent from: www.freepatentsonline.com/6012915.html
  or from: http://patft.uspto.gov/netahtml/PTO/search-bool.html

Abridged Description

A method of combusting a water/fossil fuel mixed emulsion, which comprises elevating the temperature of a water/fossil fuel mixed emulsion, and vaporizing the emulsion, with a temperature-elevating and vaporizing apparatus (item 3 in the figure below), jetting the water/fossil fuel mixed gas thus formed by that elevation of the temperature and that vaporization from a burner (item 7), and bringing a ***Brown's gas flame of a Brown's gas combustion burner (5)*** in contact with the flow of the mixed gas, thereby combusting the water/fossil fuel mixed gas.

According to the combusting method and the combustion apparatus, it is possible to combust the water/fossil fuel mixed emulsion with good energy efficiency, and to obtain high calories resulting from the combustion.

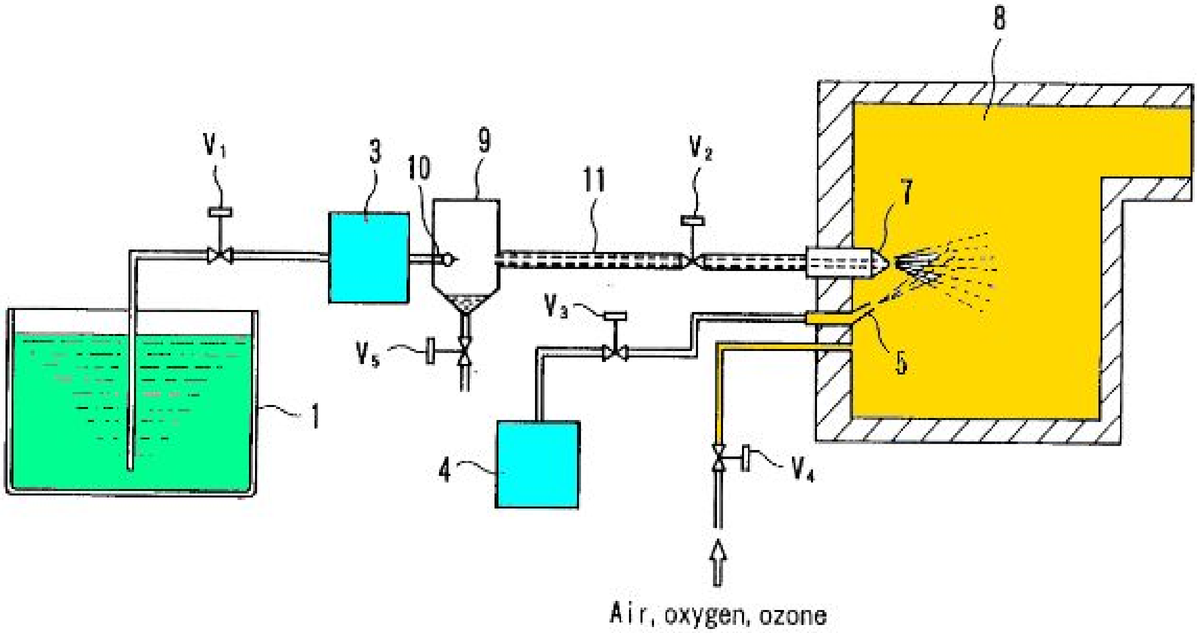

BACKGROUND OF THE INVENTION: Conventionally, various ways of combusting a fossil liquid fuel in the form of a fuel emulsion formed by mixing it with water are proposed, in view of energy-saving. Such a fuel emulsion includes, for example, an emulsion fuel in which a ***special emulsifying agent*** is used that can make a petroleum-series fuel into a ***highly hydrophilic*** [165] ***gel*** form by adding it to the fuel.

---

[165] Having an affinity for water; readily absorbing or dissolving in water [thefreedictionary.com]

Further, as the method of combusting this fuel emulsion, there is, for example, proposed a method wherein an emulsion fuel, in which water that is made cationic[166] is used, is jetted into a hot cathode chamber heated to a high temperature at which water can be decomposed.

Since the fuel emulsion contains water, unlike a usual fossil fuel, it cannot be ignited in the air at normal temperatures by a burner or the like to be combusted completely, and particularly if the fuel emulsion has a high water content, it cannot be ignited in a usual manner. Hitherto, to utilize such a water-containing fuel emulsion as a fuel to be combusted completely, the temperature of the environment for the combustion has to be brought to a temperature as high as about 1,600°C [2,900° Fahrenheit].

Accordingly, although the fuel emulsion itself is expected to be used in various applications, its complete combustion can only be realized in limited special environments. Further, it is difficult to keep such a high-temperature environment, for example, in generally operated furnaces, boilers, gas turbines, and the like, because the flow of the steam and the gas removes the heat, and in addition the energy efficiency and economy pose a great problem for its propagation and practical use.

In addition, in recent years, it is required to reduce the emission of CO_2 on a global scale, and a fuel combustion system that can secure certain calories resulting from combustion with the emission of CO_2 lowered as much as possible is desired. Because of the admixture [added by mixing] of water, the water/fossil fuel mixed emulsion can reduce the quantity of emission of CO_2 more than fossil fuels when combusted, and from this viewpoint as well there is need for a method and an apparatus for combusting a water/fossil fuel mixed emulsion efficiently and economically.

SUMMARY OF THE INVENTION: Therefore, an object of the present invention is to provide a method of combusting a water/fossil fuel mixed emulsion that can combust the water/fossil fuel mixed emulsion with ***good energy efficiency, to produce high calories resulting from the combustion***.

Further, another object of the present invention is to provide a combustion apparatus that can ***combust a water/fossil fuel mixed emulsion efficiently economically***.

DETAILED DESCRIPTION OF THE INVENTION: In view of the above objects, the inventors have found that the above objects can be attained by bringing a flow of a gas, formed by elevating the temperature of a water/fossil mixed emulsion, and vaporizing (gasification) it, in contact with a high-temperature flame resulting from the combustion of a Brown’s gas, thereby reacting them to combust the gas, which finding has led to the present invention.

---

[166] An ion or group of ions having a positive charge and characteristically moving toward the negative electrode in electrolysis [thefreedictionary.com]

The water/fossil fuel mixed emulsion --- is a liquid fuel containing water and a fossil fuel liquid --- for example, kerosene, light oil, heavy oil, etc. The water is not particularly restricted, and it may be tap water, distilled water, etc.

The proportion of the fossil fuel liquid in the emulsion is 5 to 85% by volume. In view of reducing the quantity of CO_2 emission at the time of the combustion, the proportion is preferably 10 to 30% by volume. For example, a water/fossil fuel mixed emulsion in which the proportion of water is increased using hydroxyl ion water (pH: 8.5 to 10), as previously proposed by the present inventors (***Japanese patent application No. 9-308958***).

Further, if necessary, in addition to the water and the fossil fuel, a surfactant, an electric stone [tourmaline and the like] can be added to the water/fossil fuel mixed emulsion. In the meantime, when an electric stone, such as tourmaline, is added to the water/fossil fuel mixed emulsion, the particles thereof having a particle diameter of at most about several micrometers are finely dispersed. In this case, the emulsion can be considered to be in a colloidal[167] state.

When the Brown's gas flame (item 21 in the first figure) at about 2,300°C [4,172° Fahrenheit] from the Brown's gas combustion burner (5), preferably the tip of the Brown's gas flame (21) is brought in contact with **point P** of the mixed gas flow jetted from the mixed gas burner (7), ***the fossil fuel component*** in the mixed gas is combusted at a high temperature of over 4,000°C [7,230° Fahrenheit] due to the reaction with the Brown's gas flame.

This high temperature ***causes the water vapor in the mixed gas to be decomposed into a gas mainly composed of a Brown's gas***. This gas combusts by itself instantaneously at the **point P,** and this combustion leads to flame propagation, thereby causing chain combustion in the **directions of A and B from point P** [see first figure], and as a result the entirety of the mixed gas jetted from the mixed gas burner (7) is combusted. In that first figure, item 22 indicates the flame of the combustion of the mixed gas.

Some more data, in short:

- Brown's Gas igniter flame is set at an angle 15-30° to the mixed gas flow,
- Two or more Brown's Gas flames can be used,
- Point "P" is about 5 cm away from the mixed gas nozzle tip,
- The process can be assisted by a microwaves of 2,450 MHz, see Patent for details and safety considerations,
- Various methods are described to warm up the mixture for better efficiency.

---

[167] Finely divided particles, approximately 10 to 10,000 angstroms in size, dispersed in [liquid] in such a manner that prevents them from being filtered easily or settled rapidly.

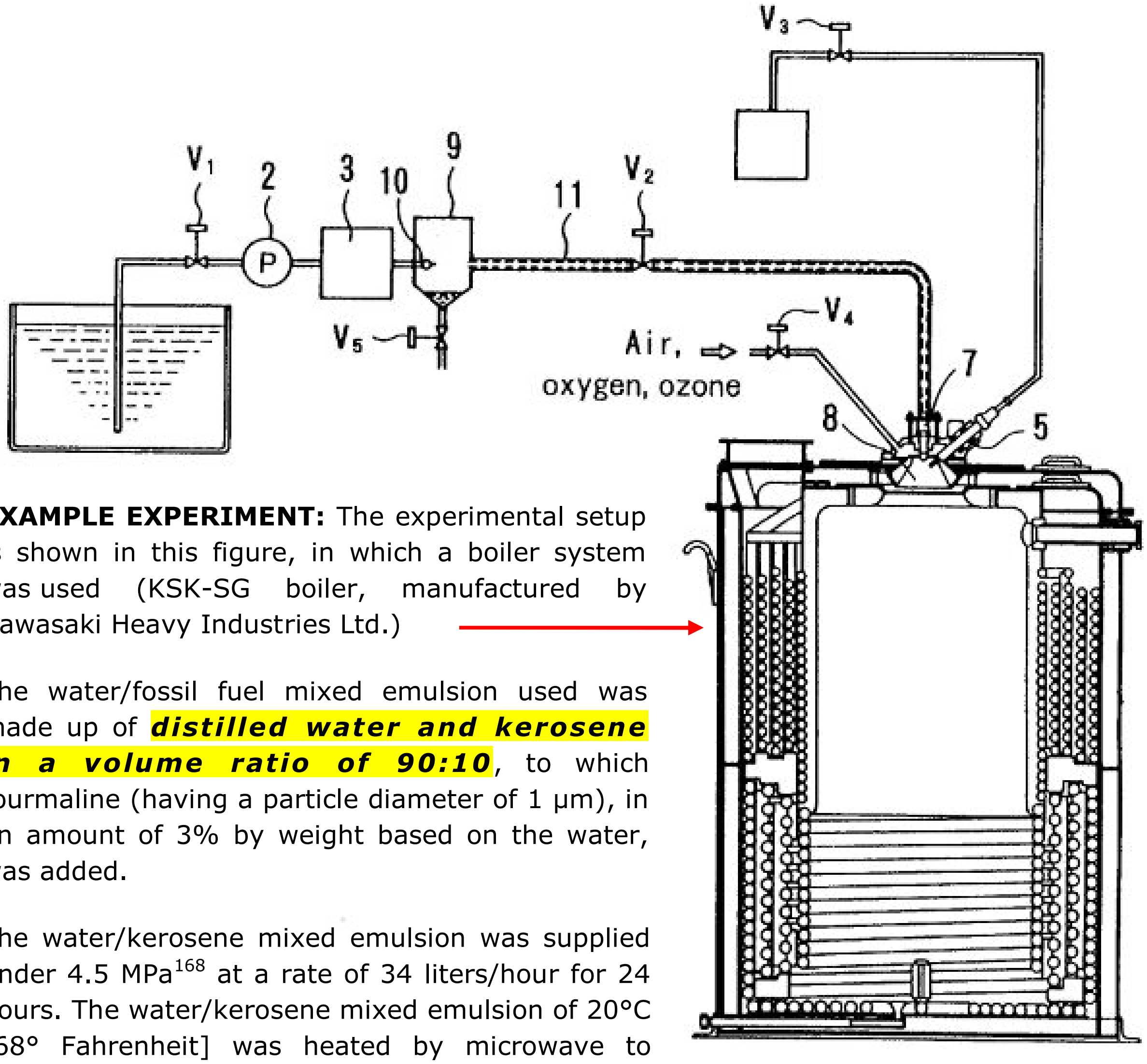

EXAMPLE EXPERIMENT: The experimental setup is shown in this figure, in which a boiler system was used (KSK-SG boiler, manufactured by Kawasaki Heavy Industries Ltd.)

The water/fossil fuel mixed emulsion used was made up of ***distilled water and kerosene in a volume ratio of 90:10***, to which tourmaline (having a particle diameter of 1 μm), in an amount of 3% by weight based on the water, was added.

The water/kerosene mixed emulsion was supplied under 4.5 MPa[168] at a rate of 34 liters/hour for 24 hours. The water/kerosene mixed emulsion of 20°C [68° Fahrenheit] was heated by microwave to 249°C [480° Fahrenheit] in about 90 seconds, then vaporized by reducing the pressure to 0.05 MPa. The temperature of the mixed gas jetted from the burner (7) was 150°C [302° Fahrenheit]. The quantity of the heat generated by the water/kerosene mixed emulsion was found to be about 6,000 kcal/kg.

COST CALCULATIONS:
The water/kerosene mixed emulsion gave the same calories resulting from the combustion as that of kerosene, at a ***fuel cost of 24% of the kerosene***.

HEAT OUTPUT: 233 kW.
INPUTS: 12 kW for the microwave irradiation, 7 kW for generating the Brown's gas.
BOTTOM LINE: ***Heat output was about 12 times the total input***.

COMPARATIVE EXAMPLE: ***Without Brown's gas,*** even though the mixed gas was warmed and vaporized the same way/level, ***the mixed gas did not combust at all***.

---

[168] MegaPascal, a unit of pressure.

Ultrasonic Water & Gasoline Mix

A Solution to Air Pollution

Originally printed in 'Newsweek', June 17, 1974

Source: http://www.keelynet.com/ (Robert A. Nelson, Jerry Decker), originally shared in 1992 by Tom Brown, Director of Borderland Sciences https://borderlandsciences.org/. Original author unknown

In the wake of the energy-crisis a 50-year-old British-born inventor named Eric Cotell has come up with an ingeniously simple and economically practical solution – one that is now exciting industry and government officials alike.

In the conventional combustion process, fuel is combined with air and turned. The result is carbon dioxide, water vapor and heavy oxides of nitrogen, which are a prime cause of chemical smog.

Cotell reasoned that if water could largely replace air as a source of oxygen in combustion, this would avoid the large amounts of nitrogen introduced by the air – and thus eliminate much of the noxious nitrogen oxides.

To accomplish this, he turned to a device he had patented 22 years ago – an ultrasonic reactor that emulsifies heavy liquids and is widely used today to prepare such products as Worcestershire sauce, ketchup, cosmetics and paint.

By refining the reactor, Cotell was able to break water into particles about one fifty-thousandth of an inch in diameter and to disperse them evenly in oil (or gasoline) to create an emulsion that was 70 percent oil and 30 percent water. When this emulsion was burned, Cotell found:

1. that there were far fewer waste products, and
2. that the small water droplets expand on heating, then explode into steam, in turn shattering the oil into even finer particles, and thus increasing the surface area of the fuel exposed for burning.

Last month Cotell divided his time between Washington, in talks with officials of the Federal Energy Office, and Detroit, where he consulted with engineers working to meet the tight 1976 automobile-emission requirements.

So far, auto tests have shown that with an ultrasonic reactor attached to a carburetor, a car can get almost DOUBLE the normal miles per gallon of gasoline – with negligible exhausts.

Cotell's company, Tymponic Corp. of Long Island, N.Y., is also about to produce units for home oil burners that will be no larger than a flashlight and cost $100 to $150.

Last winter, two Long Island schools converted to Cotell's system, and ***both reduced their fuel usage by about 25%.*** Adelphi University reports that it ***SAVED more than 3,500 gallons of oil per week!*** – and REDUCED soot output by 98 PERCENT.

A Furnace That 'Burns' Water

Originally printed in 'Popular Mechanics' of November 1972

Source: http://www.keelynet.com/
(Images from Google Books)

By John F. Pearson, Science Editor

A revolutionary combustion system makes it possible to 'burn' emulsions of fuel and water. It works in a car engine as well as an oil furnace – and cuts pollutants, too.

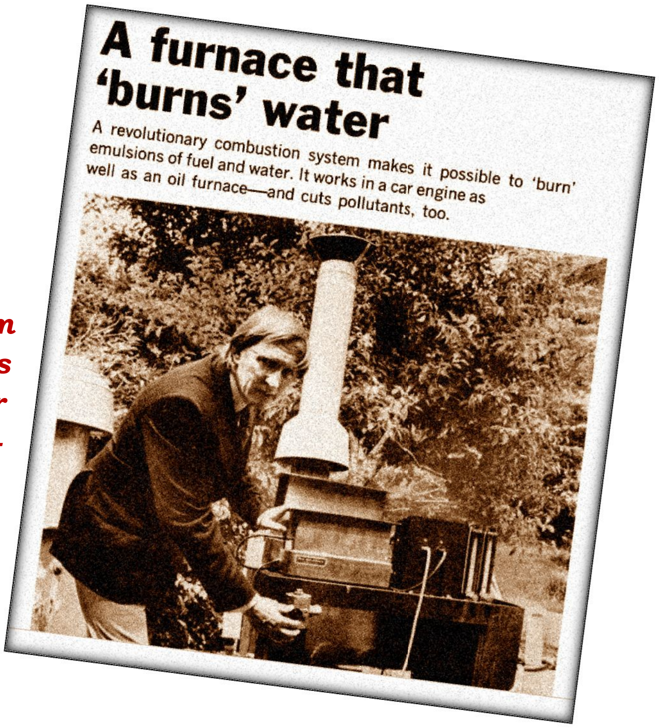

A furnace that 'burns' water

A revolutionary combustion system makes it possible to 'burn' emulsions of fuel and water. It works in a car engine as well as an oil furnace—and cuts pollutants, too.

IT'S IMPOSSIBLE. An oil burner simply can't run on a fuel that is one-third water – tap water, at that. But I recently saw it done.

The demonstration was at the Bayville, NY home of Eric C. Cotell, a British-born engineer and inventor. The gadget that made the "impossible" happen is a Cotell invention called the Ultrasonic Reactor – a device resembling a long, slim electric motor. It contains a crystal stack at one end and a mixing chamber at the other.

When a 60-cycle current is applied, the crystals vibrate at 20,000 cycles per second, turning the reactor into a "super-blender". As shown in the diagram, oil and water (70% oil, 30% water) flow into the reactor, where a terrific vibrating force causes water and oil molecules to rupture. The two liquids form an emulsion in which tiny particles of water are dispersed throughout the oil.

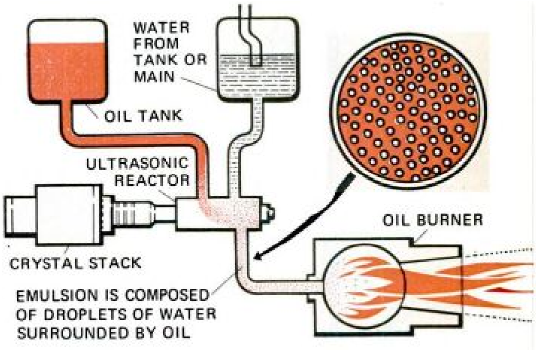

When this happens, says the inventor, the surface area of the water is increased millions of times. Thus, when the emulsion hits the furnace's combustion chamber, the water "explodes" into superheated steam, adding to the energy output of the oil.

In hundreds of tests of his system, Cotell has found that ordinary boilers run at efficiencies close to 100% – an astounding result that neither he nor leading combustion experts can explain. In the demonstration I saw, gauges indicated that the emulsion produced the same amount of heat as a 100% oil fuel.

In addition to stretching fuel, the system reportedly produces fewer pollutants than standard oil combustion. The fact that one-third less oil is burned is a key anti-pollution factor.

Though Cotell sees many potential applications for the reactor – in auto, ship and plane engines, for example – he thinks the best immediate application is in heating plants of large apartment buildings.

"This is by far my most exciting invention", says Cotell, who holds Patents in the fields of ultrasonics, hydraulics, and chemistry.

Notes by Rex Research

"This file points to a possibly useful technique for those working with water dissociation for the purpose of hydrogen fueled motors. The smaller the particle is, the less energy required to dissociate into consecutively smaller units. This is probably one of the inspirational sources used by Stan Meyers for his "fractioning" process.

"Ultrasonic generators can be both mechanical or electronic in nature. Transducers can be easily purchased with resonant frequencies ranging from 20 kHz to 40 kHz. Of course, that is simply where they are most efficient, they will still transmit other frequencies just as any speaker will."

Sources for obtaining transducers at reasonable prices:

- http://www.ebay.com/bhp/ultrasonic-transducer
- http://www.mouser.com/Search/Refine.aspx?Keyword=ultrasonic+transducer
- https://www.digikey.com/products/en/sensors-transducers/ultrasonic-receivers-transmitters/527
- https://www.aliexpress.com/w/wholesale-ultrasonic-transducer.html
- Special 42.8 kHz – the page explains shortly why this frequency is unique, and provides vital safety tips: http://myskunkworks.net/index.php?route=product/product&product_id=76

Eric Cotell's Patents

Inventor: Eric Charles Cotell. Patent № 4048963 "Combustion method comprising burning an intimate emulsion of fuel and water" – 1977

Download: https://www.google.com/patents/US4048963

ABSTRACT

A combustion process in which a water-in-oil emulsion of liquid fuel, such as liquid hydrocarbons, containing from 10 to 50% water and preferably 10 to 30% water is burned.

The emulsion is produced, with little or no added emulsifying agent, by sonic agitation, including a sonic generator and an acoustic transformer having a larger cross-section coupled to or in contact with the sonic generator than at its other end, at which emulsification takes place, whereby the sonic energy density is increased. With the increased sonic density an emulsion is produced which when burned produces a quality of burn such that the combustion is faster, more complete, and cleaner, with an increase in efficiency even up to 30% of water. The increase in efficiency often equals that obtained by the burning of the same weight of pure fuel in the conventional manner.

FIG. 1

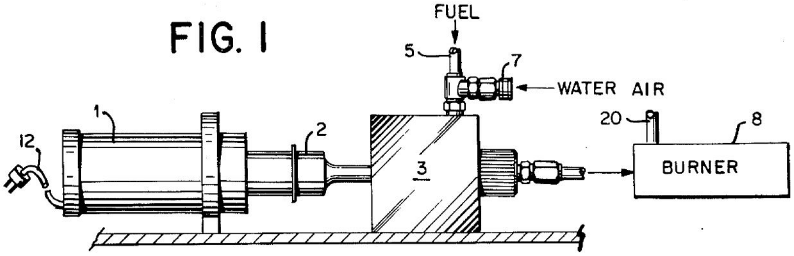

FIG. 2

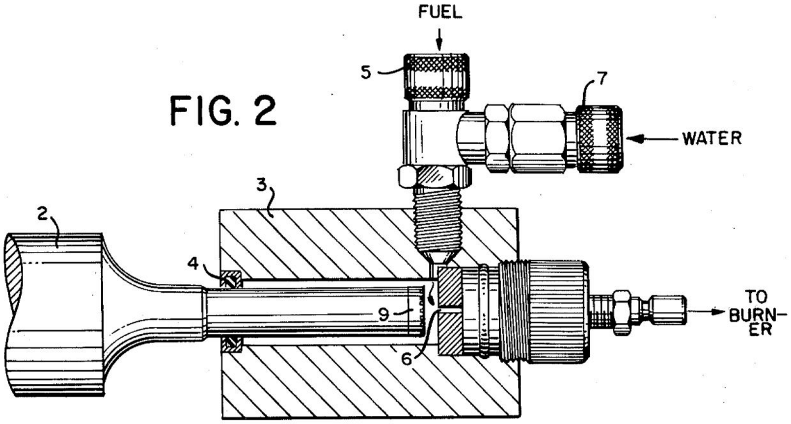

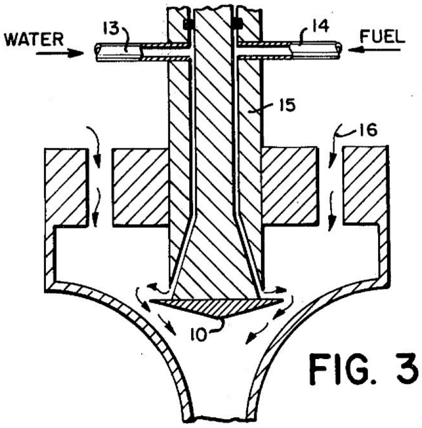

FIG. 3

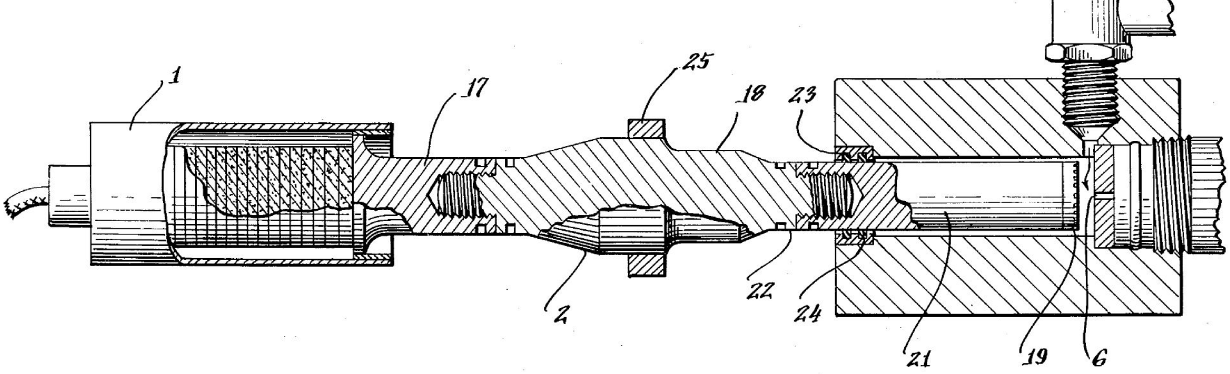

Inventor: Eric Charles Cotell. Patent № 3749318
"Combustion Method and Apparatus Burning an Intimate Emulsion of Fuel and Water" – 1973

Download: https://www.google.com/patents/US3749318

ABSTRACT

A combustion apparatus and process in which a water-in-oil emulsion of liquid fuel, such as liquid hydrocarbons, containing from 10 to 50% water, the emulsion being produced without any substantial emulsifying agent and preferably by sonic agitation, is burned.

--- Considerable problems have arisen. If there is a very large excess of oxygen, the efficiency of the combustion process is lowered because a considerable amount of the air, including inert nitrogen, has to be heated up. In the case of an internal combustion engine, operating with excessive amounts of oxygen can result in slow combustion, which can overheat and burn out exhaust valves. If the combustion is with amounts of oxygen and fuel more nearly in balance, for example with only a small excess of oxygen, problems arise with incomplete combustion. This can result in excessive amount of carbon monoxide and/or incompletely burned fuel, which may show up as unburned hydrocarbons, soot and the like. Incomplete combustion lowers the combustion efficiency and can also contaminate the equipment. In the case of internal combustion engines, unburned hydrocarbons, carbon monoxide, and oxides of nitrogen, generally symbolized by the formula NO_x, are serious atmospheric pollutants as they give rise to photochemical smog and the like. Contamination of NO_x from an IC engine usually results when combustion temperature is high.

It has been proposed in the past to introduce streams of water into a burner or to inject water into an internal combustion engine as it operates. This has proven to reduce somewhat incompletely burned fuel deposited in the form of carbon, and in the case of IC engines this can lower NO_x production and also in certain cases, such as aircraft piston engines, permit operating for short times at higher power outputs with very rich mixtures which would otherwise burn up the engine. Water injection, however, has serious drawbacks. In the first place, it is very difficult to control relative amounts of water and fuel precisely. Even if the control is maintained to a satisfactory degree, efficiency drops because the water has to be vaporized, with its extremely high latent heat, and heated up in the combustion, which takes further power because of the high specific heat of water vapor. As a result, water injection has only been practically used in unusual circumstances.

Summary of the Invention

The present invention burns an extremely fine emulsion of water and liquid fuel, normally hydrocarbonaceous fuel, in which the water droplets are dispersed in an extremely fine average particle size. While the present invention is not absolutely limited to the method by which the emulsion is carried out, it is preferred to emulsify by using an ultrasonic probe or other device which agitates the fuel and water to produce an extraordinarily finely dispersed emulsion, because it is the fine dispersion that produces the important new results which will be set out below; mere presence of the water does not.

Figure 4 is an illustration of a unitary emulsifier and furnace burner, particularly for larger units.

FIG. 4

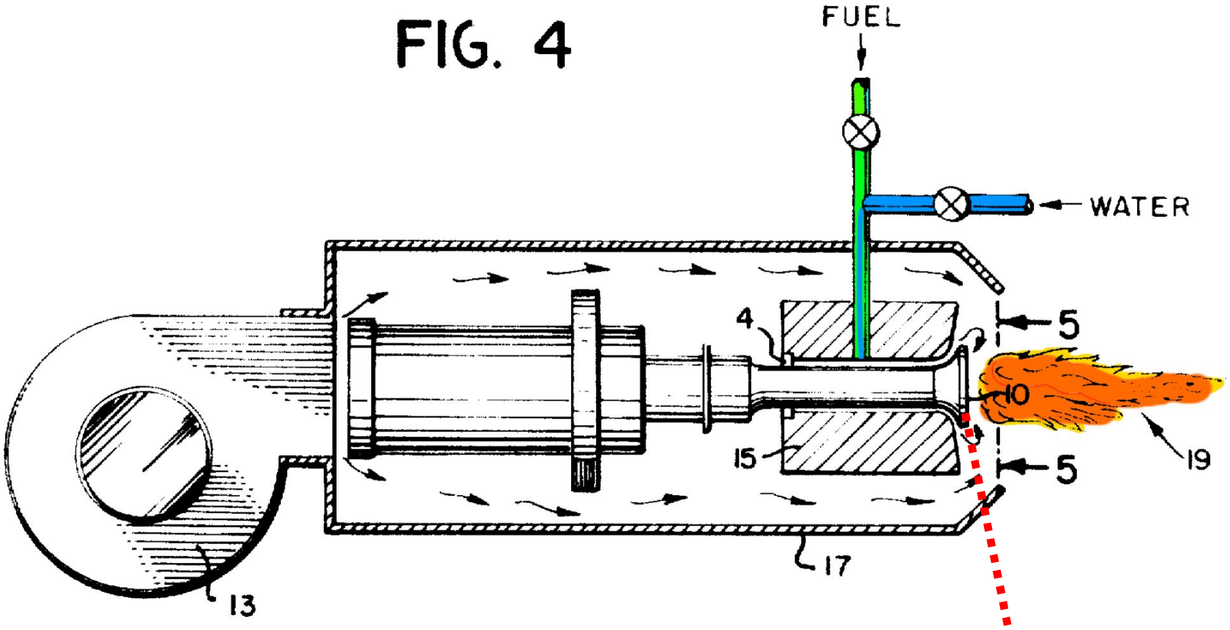

Figure 5 is a horizontal elevation detail of the expanded plate at the end of the probe.

FIG. 5

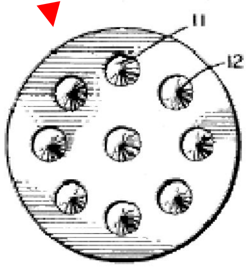

Figures 4 and 5 illustrate a unitary emulsifier and burner for furnace use. --- It will be seen that in Figure 4 there is an overall housing through which a blast of air passes from the blower 13. This air flows over the ultrasonic generator, thus cooling it, which is desirable in a large sized burner, and finally passes over the end of the housing 15.

The fuel and water streams flow into an annular space between the housing 15 and the Sonifier probe. The latter is provided with an end plate 10 which has a series of small annular depressions 11 with a central projection 12 forming the inside of the annulus. This can be seen in Figure 5. The clearance between the end of the housing and the plate 10 is quite narrow and is shown somewhat exaggerated in Figure 4 for the sake of clarity. A film of fuel and water flows over the plate, where it is emulsified and atomized and thrown some distance to the right, forming a flame, which is diagrammatically shown at 19.

--- The IC engine fed with a gasoline and water emulsion atomized into the air ran with the same power as on straight gasoline, and pollutants were reduced, unburned hydrocarbons practically zero, and NO_x still more reduced.

Inventor: Eric Cotell. Patent № 3941552 (in Canada: CA1078182) "Burning water-in-oil emulsion containing pulverized coal"– 1976

Download: https://www.google.com/patents/US3941552

ABSTRACT:

Pulverized coal is slurried with water then oil or if desired oil and pulverized alkalis preferably lime or limestone is added and the mixture subjected to sonic vibrations with an energy density of at least 11.625 watts per cm.sup.2. Liquid suspension is produced and any excess water or oil separates out as a separate phase. Normally excess oil is used and the excess oil phase can be recycled. The resulting dispersion is utilized and burned in a furnace. A clean flame is produced which has the characteristics of an oil flame and not a powdered coal flame. The addition of lime is optional as its purpose is to reduce sulfur dioxide in burning where the coal contains sulfur. If there is no sulfur or so little as to meet environmental standards the addition of lime may be omitted. The amount of lime is preferably at least about twice stoichiometric based on the sulfur content of the coal. Up to 80% of sulfur dioxide produced on burning can react with the lime and the calcium sulfate produced removed by conventional particle separators.

FIG. 1 is a diagrammatic showing of an experimental furnace burning the coal dispersion in a bed;

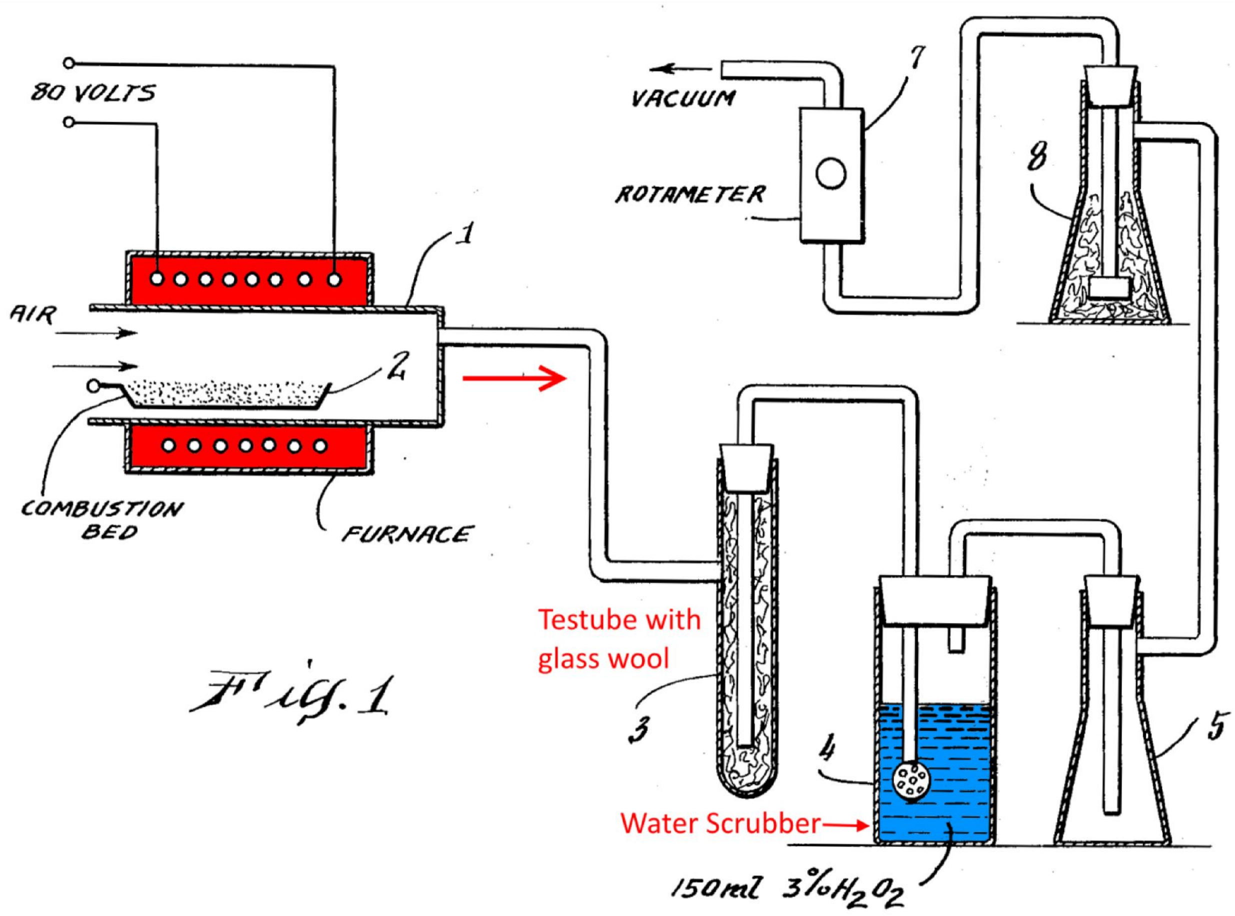

Fig. 1

FIG. 2 is a curve showing SO_2 removal for various amounts of lime up to 50% excesses;

Fig. 2.

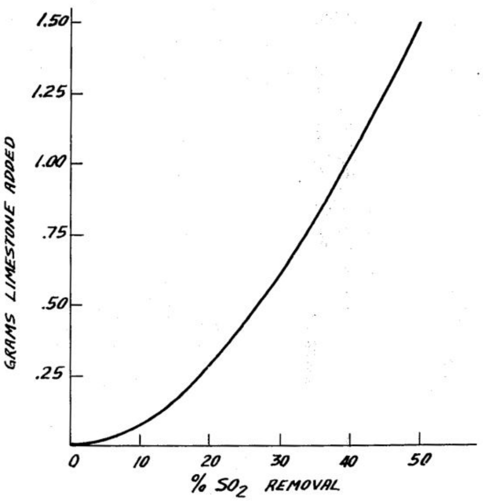

FIG. 3 is a diagrammatic flow sheet of a practical installation atomizing the coal dispersion to form a flame.

Fig. 3.

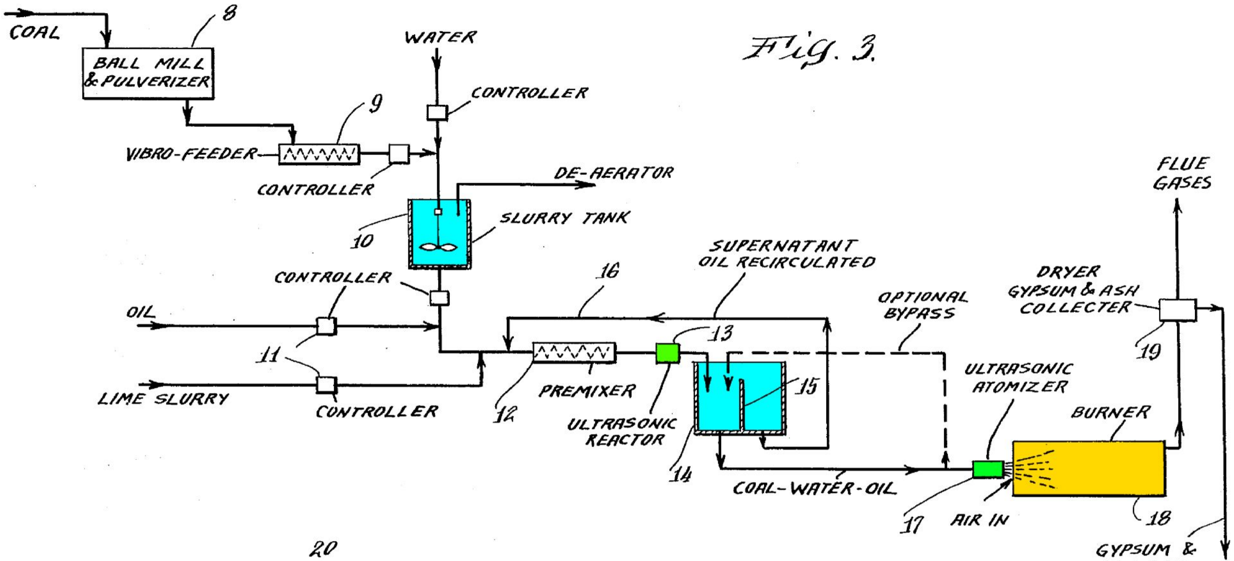

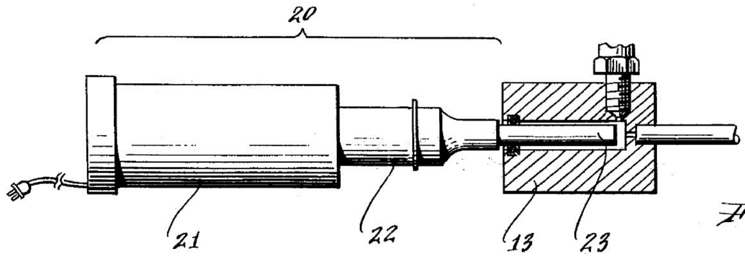

Fig. 4.

FIG. 4 is a semi-diagrammatic illustration of an ultrasonic probe.

--- Combustion of the atomized fuel produces a flame which is clear and results in complete combustion and which does not have the appearance of a flame from pulverized coal combustion. The presence of water in the fuel dispersion is probably what assures the flame quality and which permits very complete combustion.

The combustion is so complete that there is very little if any loss in heating due to the presence of water which, of course, is flashed into steam as the dispersion burns.

Inventor: Eric Charles Cotell. Patent № 4412512
"Fuel supply system"– 1983

Download: https://www.google.com/patents/US4412512

ABSTRACT

A fuel supply system is disclosed in which oil and water are mixed and delivered under pressure to a nozzle or other atomizing means at which combustion is to occur. The mixture of oil and water is delivered to the atomizing means along conduit means and those conduit means include means to produce agitation of the oil and water so that an intimate mixture of oil and water is delivered to the atomizing means. Complete emulsification occurs at the atomizing means to promote combustion.

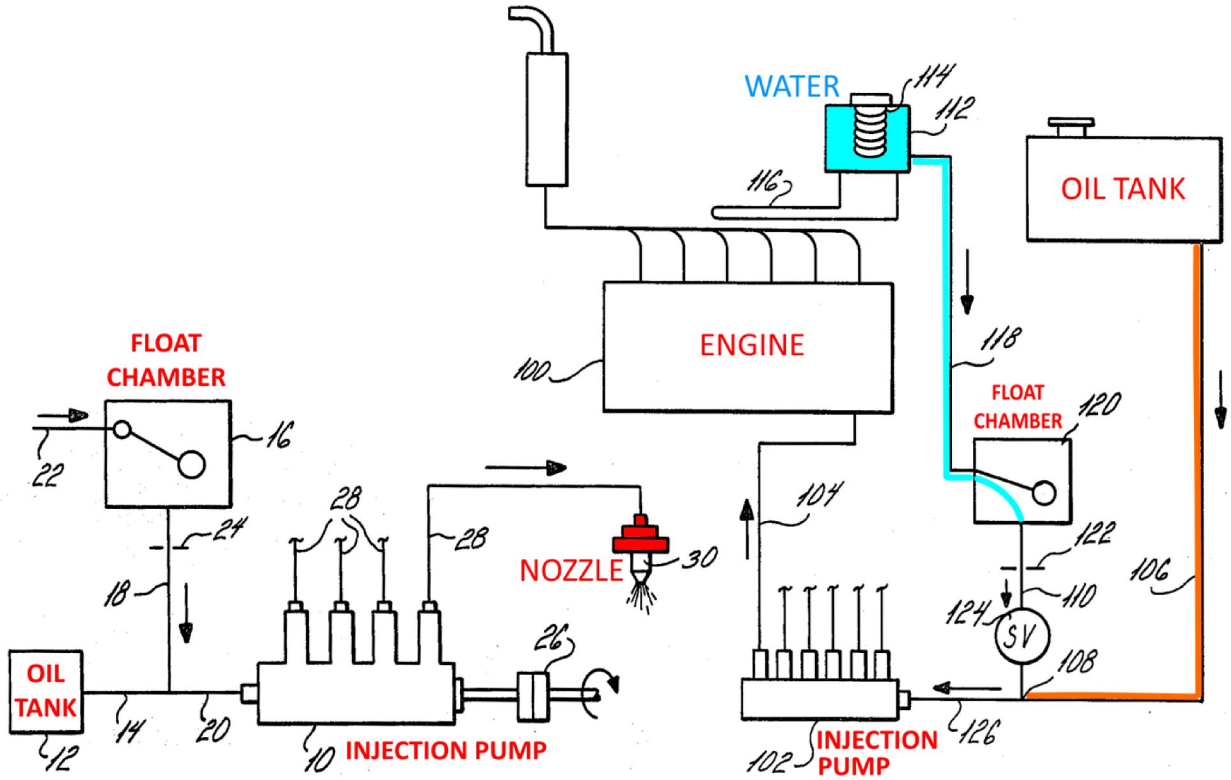

(Cotell was granted several more Patents in this field of Waterfuel, some of them were also registered in other countries)

Inventor: Eric Charles Cotell. Patent Application № 20080006326 A1 (also published in Canada, Europe and Worldwide) "Real time in-line hydrosonic water-in-fuel emulsion apparatus, process and system" – 2008

Download: https://www.google.com.hk/patents/US20080006326

ABSTRACT

Devices, methods and system for combustion of an intimate emulsion of water-in-fuel without the use of chemical additives in order to reduce emissions and improve fuel economy with little or no engine or boiler de-rating or modifications.

Apparatus and method for producing, combusting, storing and reducing viscosity of a fuel comprised of water and oil or other hydrocarbons, which is constituted as an emulsion without the need for chemical stabilizers by exposure to constant cavitation.

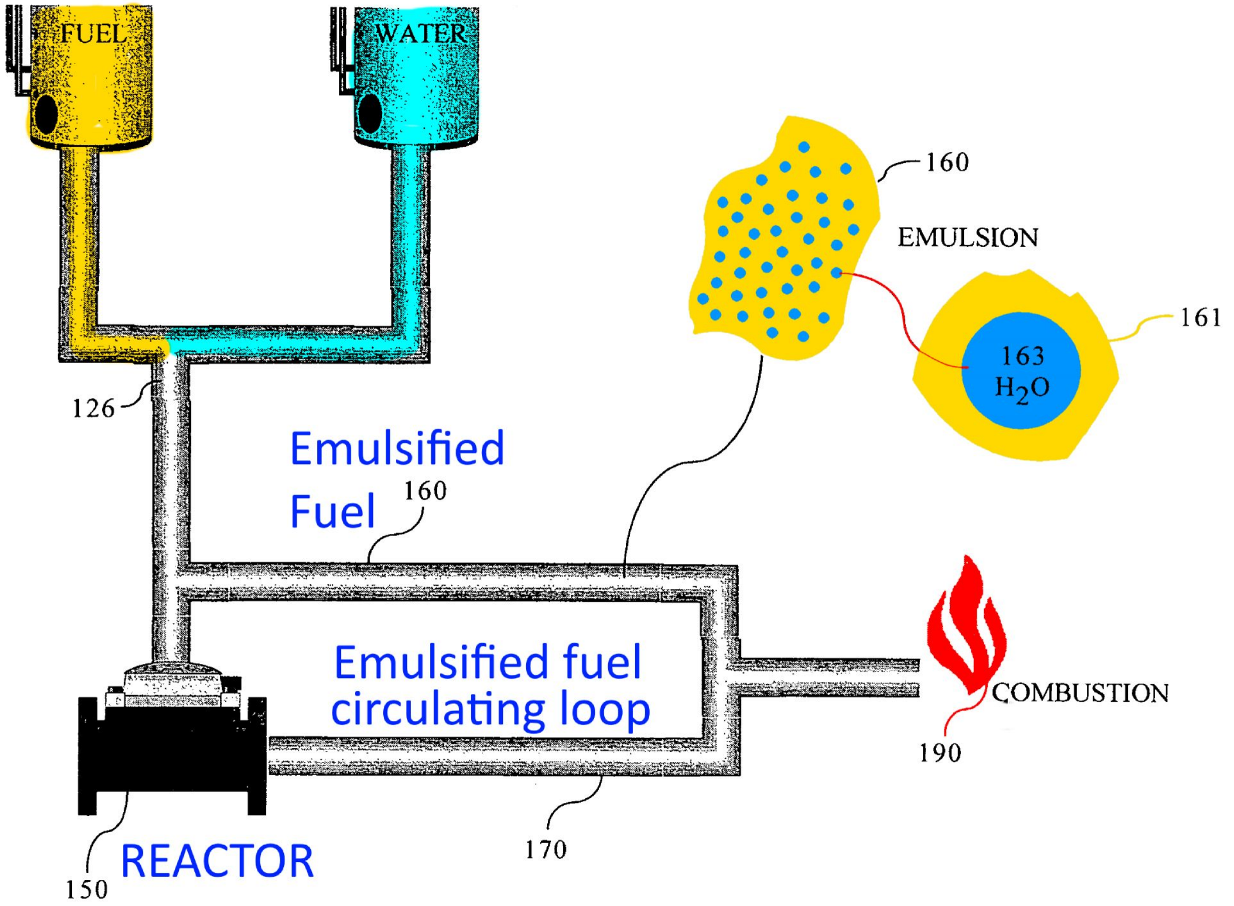

Inventors roll right along – on alcohol, water fuel

Source: http://archives.chicagotribune.com/1979/08/12/page/5/article/inventors-roll-right-along-on-alcohol-water-fuel, originally published in the Chicago Tribune, Aug. 12, 1979, written by Bob Wiedrich

Chicago Tribune, Sunday, August 12, 1979 Section 1 5

Tribune Photo by Luigi Mendicino

Herb Hansen (left) and Dale Pate point out how they converted a 1975 Ford Pinto engine to run on an alcohol and water fuel mixture. "I'll be darned if it didn't finally work," Hansen says of the experiment. The car gets 20 to 25 per cent better mileage than with gasoline.

Inventors roll right along —on alcohol, water fuel

Herb Hansen (left) and Dale Pate point out how they converted a 1975 Ford Pinto engine to run on an alcohol and water fuel mixture. "I'll be darned if it didn't finally work," Hansen says of the experiment. The car gets 20 to 25 per cent better mileage than with gasoline.

Herbert Hansen and his shipmates aboard an American submarine in World War II used to sink Japanese shipping with torpedoes powered by alcohol and water.

Now, 30 years later, Hansen and his fellow Inventor, Dale Pate, use the same mixture to power a 1925 Model T-Ford and a 1975 Ford Pinto.

Both cars, although 50 years apart in sophistication and technology, run equally well on a vaporized fuel consisting of 90 per cent alcohol and 10 per cent water.

Each achieves 20 to 25 per cent better mileage on the fuel than with gasoline. Neither pollutes the environment with its exhaust. Neither suffers a loss in power or acceleration.

And between them, the two cars have rolled in excess of 1,000 trouble-free miles on the fuel mixture concocted by the two imaginative Elgin inventors.

Now, I don't know – and neither do they – whether their brainstorm can bail out the United States from its petroleum dilemma.

But after viewing the results of their work I'm hoping someone in Washington will look up with interest. Because at first blush, their system works beautifully. It scoots you down the highway at the same speeds and with the same pickup you would expect from gasoline.

So even if there is some hidden flaw Hansen and Pate have yet to detect in their invention, certainly the technological geniuses of the federal government and the automotive industry should be able to solve it.

Hansen first got the idea last fall while reminiscing about the days when he and the submarine crews launched torpedoes fueled by 90 per cent alcohol and 10 per cent water. And the torpedoes shot through the water at 48 knots for several miles to deliver their 3,300 pounds of bulk on target.

"I figured the same idea should work with a car," Hansen said. "So Pate and I got our heads together and started experimenting. And I'll be darned if it didn't finally work."

The secret of their success is in the system they dreamed up to heat the fuel mixture to a temperature at which it would fire with maximum efficiency.

Others, they said, have experimented with straight alcohol as automotive fuel but with less than spectacular results. Cold alcohol just doesn't work as well. For one thing, getting started is tougher.

However, Hansen and Pate pre-heat the fuel before it is ignited in the cylinders. They also introduce water and moisturized air to further enhance efficiency.

And the real beauty of their invention is that it does not require drastically altering a car or installing an entirely new fuel system. They merely add a few mechanical gimmicks and use the same fuel tank with which the car was endowed by Detroit.

I went out to visit the two inventors in Hansen's home garage laboratory last week.

Hansen is a mechanical engineer with senior status at F.W. Means & Co. in Chicago. Pate is an Elgin police corporal in charge of that department's juvenile division.

They first met in 1966, while working as volunteers restoring aged steam locomotives at the Illinois Railway Museum in Union Illinois. So as born tinkerers, it was inevitable that they should marshal their talents.

Here is how the system works:

The alcohol-and-water blend goes from the regular fuel tank to the fuel pump. Then it passes through a pre-heater using engine coolant to heat the fuel to 170 degrees Fahrenheit on its way to the carburetor.

This works best, of course, when the engine is warm. So for easy starting, an electric heater in the carburetor does the same job until the engine warms up. Starting usually requires about a 1-minute wait.

In the carburetor, the alcohol and water mix is joined by moisturized air heated by the exhaust pipe and fed from a five-gallon tank of water that is refilled with every tankful of fuel.

The moisturized air helps vaporize the fuel. And the mixture is ignited in the cylinders, the moisture turns to super heated steam with tremendous expanding capacity to further improve power and fuel efficiency.

THERE IT IS. The Hansen-Pate system is that simple. Even I can understand It.

“The only exhaust produced is carbon and water,” Hansen sid, “The same things you and I are exhaling.”

The only exhaust odor is that of burned alcohol. And the inventors overcome that by sprinkling a few drops of aftershave lotion in the fuel.

“I suppose if you were driving a Cadillac, you’d want to use Chanel No. 5 perfume instead,” Pate quipped.

The Model T-Ford, the first car tested with the system, is not equipped with fuel heaters. So it doesn’t run as well.

However, the Ford Pinto has a switch on the dashboard that permits the interchange of fuels so that a driver can burn gasoline, if he chooses. The switch activates the fuel heaters when alcohol and water are being used.

“Vehicles can run on straight alcohol, but they only get 5 to 8 miles to the gallon,” Pate explained as he mixed a batch of alcohol and water in a one-ounce shotglass for a mileage test with the Pinto.

“We’ve gotten up to 32 miles to the gallon with two people riding in the Pinto, which has a four-cylinder, 140-cubic-inch engine with a four-speed transmission.

“That was at 35 miles an hour. Naturally, at 55 m.p.h., you only get about 27 miles to the gallon. With an automatic transmission you’d get about 2 miles less to the gallon.”

“You can buy alcohol in bulk for $1.27½ a gallon,” Hansen said.

“With 20 to 23 per cent better mileage, our fuel gets competitive with gasoline selling for $1.18 to $1.20 a gallon. And the price of gasoline is getting up there.

“Further, our fuel is a domestic source of renewable energy. You can make alcohol from organic wastes, as well as plant matter. Even garbage dumps can produce alcohol. That way, you don’t have to import anything.

“We believe this is a revolutionary idea whose time has come and that it is the only viable alternative to gasoline.”

Pate and Hansen have applied for a patent. So now, all they are waiting for is someone to come to their door with sufficient capital to bankroll their invention.

I hope the guy shows up soon.

Inventors: Herbert N.W. Hansen and Dale F. Pate
Patent App. № EP 0045601-A1
"Vapour fuel system for an internal combustion engine" – 1982.

Download: http://google.com/patents/EP0045601A1

ABSTRACT

An internal combustion engine is operated with an alcohol fuel heated by a heat exchanger and vaporized by a series of electric heating elements prior to combustion. The heat exchanger uses waste heat from the engine coolant. In addition, means for heating and humidifying the combustion air is provided to insure complete vaporization of the alcohol fuel and to overcome the lower caloric power potential of alcohol as compared to gasoline.

Brief Description of the Drawings

Figure 1 is a schematic representation of a preferred embodiment of the invention.

Figure 2 is a cross-sectional view of a heat exchanging device which heats the alcohol fuel with hot engine coolant.

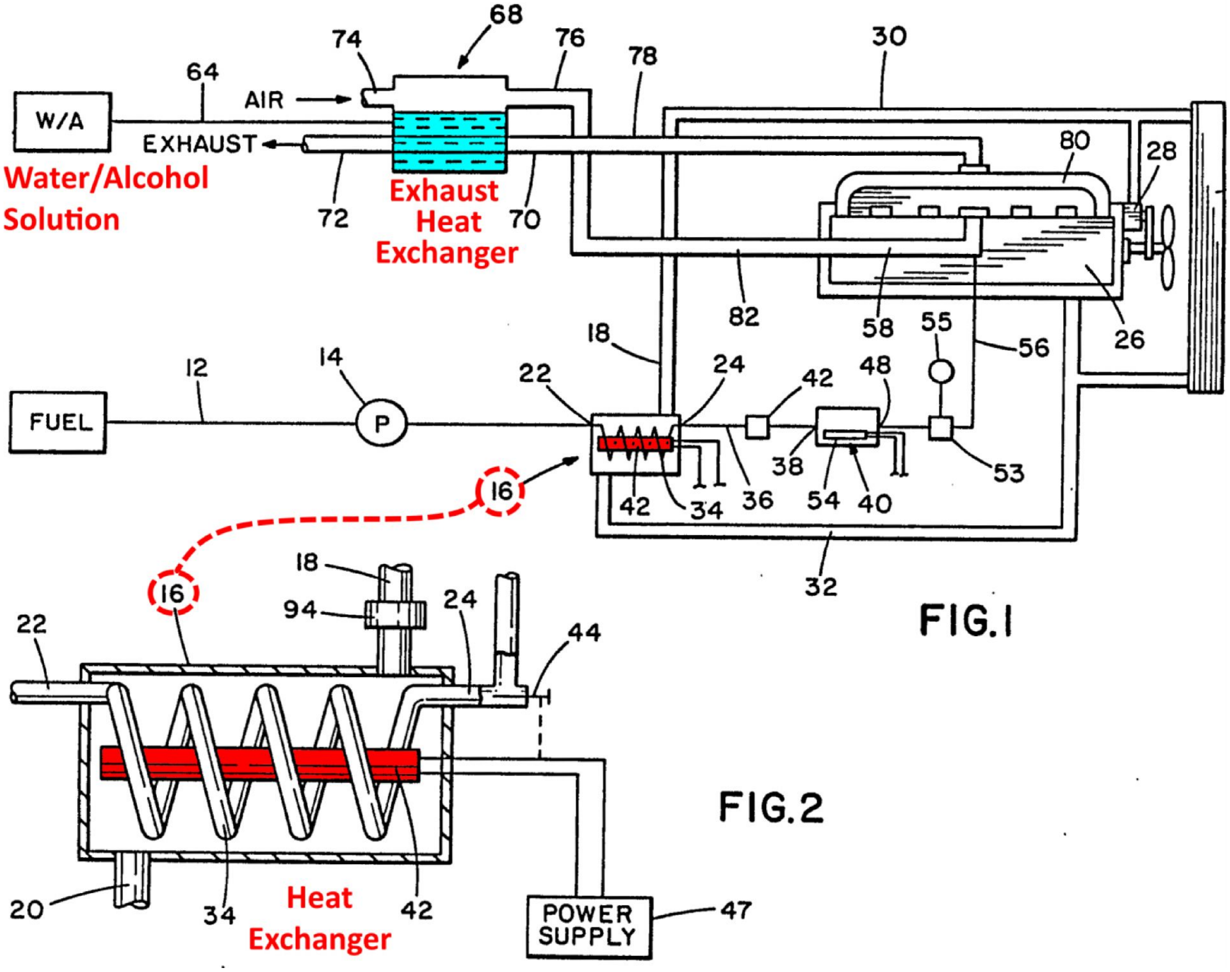

FIG.1

FIG.2

Figure 3 is a cross-sectional view of a vaporization chamber which heats and vaporizes the alcohol fuel prior to combustion.

Figure 4 is a side elevational view of an exhaust gas heat exchanging unit.

Figure 5 is a sectional view taken along the line 5-5 of Figure 4.

Also see US Patent 5035227 granted to Hansen on Jul 30, 1991

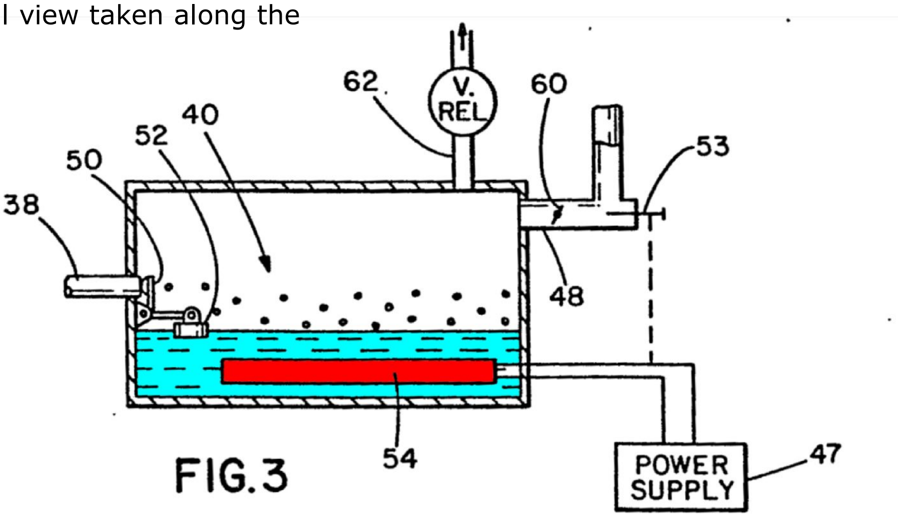

FIG.3

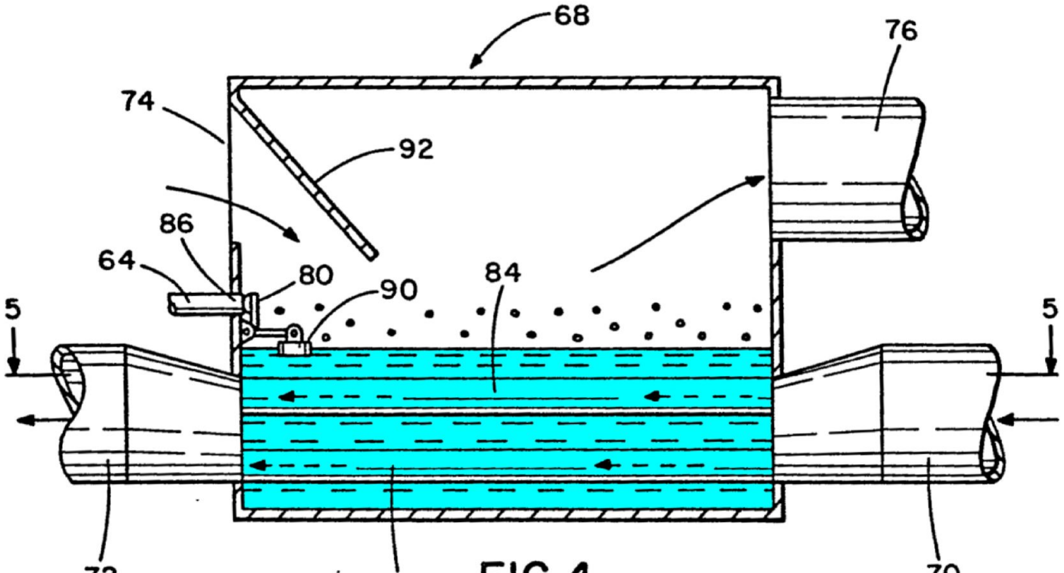

FIG.4

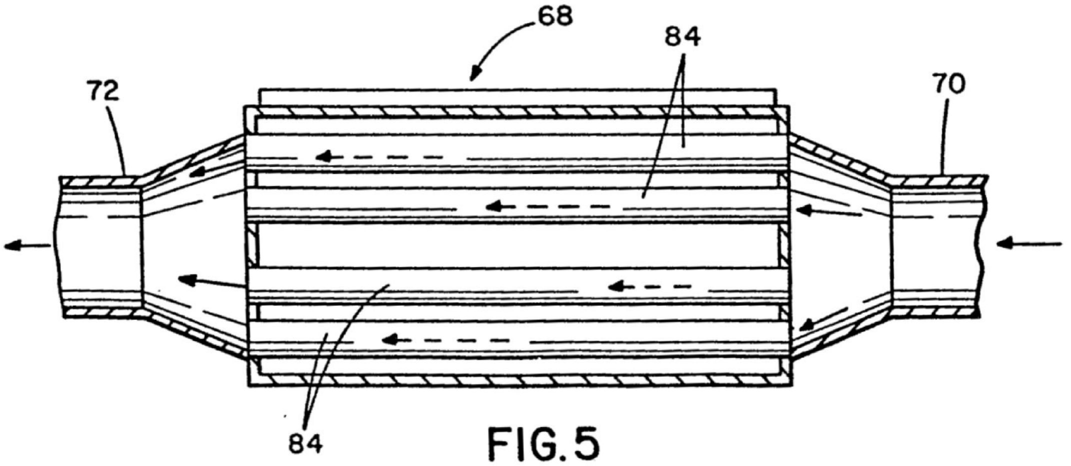

FIG.5

Cleaner diesel engines

Pouring water on troubled oils

To make engines cleaner, add H2O

Jun 3rd 2010 | COLOGNE

DIESEL engines, with their rough-and-ready, spark-plug-free method of fuel ignition, have a reputation for being smoky and smelly. These days, that is a bit unfair. Fussy consumers and even fussier regulations mean the sophisticated diesels used to propel modern cars are pretty much as clean as their petrol-powered, sparked-up equivalents. But the heavy-duty diesels employed in ships still have a long way to go.

And that matters. Research by James Corbett of the University of Delaware estimates that soot from ships' diesels contributes to 60,000 deaths from heart and lung disease every year. Dirty ships' diesels also produce oxides of nitrogen—the main ingredient of smog. Now that land-based nitrogen-oxide pollution is being cleaned up, about 30% of the world's remaining emissions of the stuff are reckoned to come out of the funnels of seagoing cargo vessels.

Soon to be a no-smoking area

On June 3, 2010, the ***Economist*** ran an interesting article titled "Pouring water on troubled oils – To make engines cleaner, add H2O"

The caption under the smoking ship said: "Soon to be a no-smoking area"

First they stated the HAZARD:

"Research by James Corbett of the University of Delaware estimates that soot from ships' diesels contributes to 60,000 deaths from heart and lung disease every year. Dirty ships' diesels also produce oxides of nitrogen – the main ingredient of smog. Now that land-based nitrogen-oxide pollution is being cleaned up, about 30% of the world's remaining emissions of the stuff are reckoned to come out of the funnels of seagoing cargo vessels."

And then, the Economist stated the HEART OF THE PROBLEM:

"The problem is incomplete combustion."

Finally, they continue by telling the story of Dr. Reinhard Strey of the University of Cologne (German: Universität zu Köln) in North Rhine-Westphalia, Germany. To overcome the problem of previous water-and-fuel mixes being unstable in long-term storage (water and oil eventually separate), Strey developed a chemical solution: ***"a mixture of oleic acid (a fatty acid found in various vegetable oils) and nitrogen-containing compounds called amines. This mixture dissolves readily in diesel fuel and binds water to it without any need for stirring. The water droplets themselves can be as small as a nanometre (a billionth of a metre) across. That they are so small helps stabilise the emulsion. The result is, in effect, a liquid sponge, and means the mixture can be stored indefinitely, like ordinary diesel, without risk of separation."***

Read the complete story here: www.economist.com/node/16271415

Below is a brief extract from Dr. Strey's Patent.

Inventors: Reinhard Strey, Axel Nawrath and Thomas Sottmann. U.S. Patent № US 7977389 (also published as DE10334897A1, US20070028507, EP1656436A1 and WO2005012466A1) "Microemulsions and use thereof as a fuel" – 2011

Download: https://www.google.com/patents/US7977389?hl=en

Excerpts

The invention relates to bicontinuous microemulsions and to the use thereof as a fuel, combustion or heating fluid. Said fuels permit an increased efficiency of internal combustion systems and heating installations of any type and, simultaneously, a minimized emission of pollutants, associated with combustion, to be obtained.

The present invention relates to microemulsions which have a characteristic nanostructure of alternating continuous hydrophilic and hydrophobic domains. Such microemulsions serve as fuels which allow combustion with unprecedented low noxious substances emission and high efficiency.

Microemulsions have now been found which are optimum bicontinuous microemulsions, in contrast to known formulations. These microemulsions can be employed as hydrofuels, they have a characteristic nanostructure of alternating water and oil domains and prove to be fuels with unprecedented low noxious substances emission and high efficiency. Such microemulsions allow to mix water and conventional fuels in any ratio desired and are still thermodynamically stable.

FIG. 1: Freeze fracture electron microphotograph of a bicontinuous microemulsion consisting of equal amounts of water and n-octane, surfactant content 5% by weight ($Cl_{12}E_5$). The drawing illustrates the three-dimensionally continuous form of the surfactant film which separates water and octane on a microscopic level.

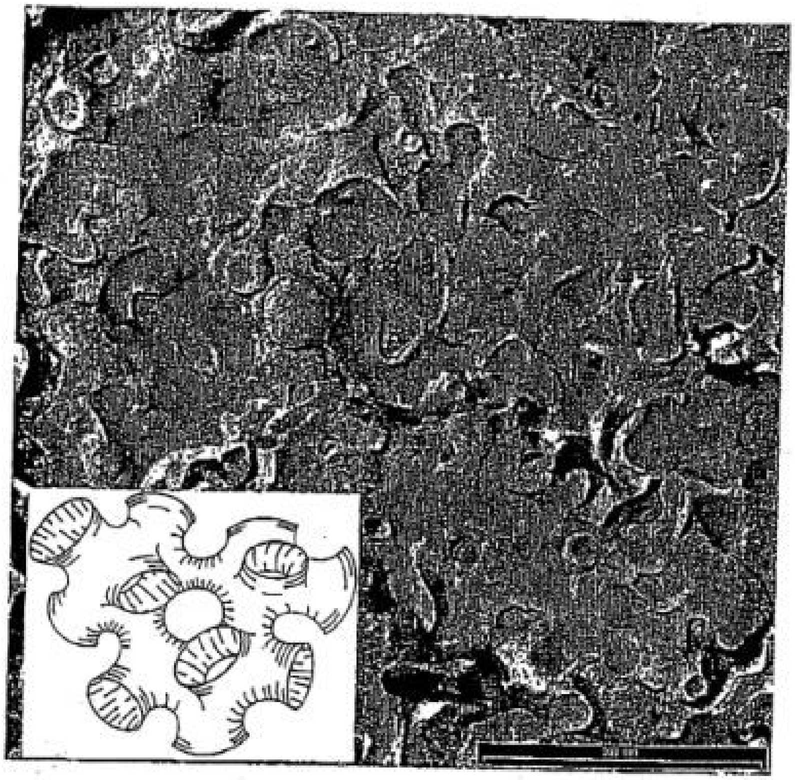

Fig.1

It is the object of the invention to provide optimized and clean fuels which can be burnt with air as efficiently and completely as possible in terms of the provided hydrocarbon content, preferably to form exclusively water and carbon dioxide. The emissions of NOx, CO, incompletely burnt hydrocarbons (HC) and particulate matter (PM) are to be suppressed as far as possible, and the fuel consumption reduced.

According to the invention, this object is achieved by employing bicontinuous optimum microemulsions as the fuel and by adding emulsifier systems to the mixture which are adapted to each oil respectively and consist of at least one non-ionic surfactant, preferably in admixture with at least one ionic surfactant, more preferably in the presence of cosurfactants (longer-chain alcohols, amphiphilic block copolymers etc.).

The microemulsions according to embodiment (1) are thermodynamically stable one-phase microemulsions which preferably consist of water, technical oils and technical emulsifier mixtures.

The Patent provides detailed formulae for the following:

- Preparation of Bicontinuous Microemulsions from Components (A(+E)), (B) and (C/D)
- Composition of One-Phase Bicontinuous Microemulsions Consisting of Water, Diesel fuel, Lutensol TO_5. AOT and $(NH_4)2CO_3$
- Composition of Microemulsions Consisting of Water, Diesel Fuel, Lutensol TO_5, Oleic Acid, Dodecylamine and Ammonium Carbonate
- Composition of Microemulsions Consisting of Water, Diesel Fuel, Lutensol TO_5, AOT, NaCl (+Urea)
- Composition of Microemulsions Consisting of Water, Diesel Fuel, Lutensol TO_5, AOT, Ammonium Acetate
- Composition of Microemulsions Consisting of Water, Diesel Fuel, Lutensol TO_5, Ammonium Oleate, Ammonium Acetate
- Composition of Microemulsions Consisting of Water, Diesel Fuel, Lutensol TO_5 and TO_3.

Finally, the Patent provides graphed results of measurements performed on engine test benches.

This Patent also gives a concise overview of other major inventions in the field, for example ***"U.S. Pat. No. 5,669,938 describes one-phase water/oil emulsions consisting of diesel fuel and 1-40% of water and surfactant... U.S. Pat. No. 4,451,265 describes one-phase, clear fuel/water microemolsions which have high stabilities at low temperatures."***

Also read: http://www.tandfonline.com/doi/abs/10.1080/01932691.2014.886513

Chapter 25.

Neutralization of Radioactive Waste with Brown's Gas

Capability vs. Politics

The ability of Brown's Gas to neutralize radioactive waste has been known and discussed for decades. In this book it is mentioned in several places by several scientists.

Brown's Gas can efficiently neutralize radioactive waste though transmutation[169] right at the reactor thus removing the need for transportation or storage of nuclear waste. ***Such application can revolutionize the nuclear industry.*** Former state assemblyman Dan Haley from New York *investigated the lack of response* after the U.S. Department of Energy observed such demonstration of transmutation. The Department invented numerous excuses after which addressed they finally decided they had seen nothing. The Dept. of Energy argued the following:

3) ***"The radioactivity was encapsulated in the sample"***, even though the sample was crushed and the Geiger counter reading was still the same;
4) ***"The radioactivity must be disparaged into the atmosphere"*** – even though the Dept. of Health preformed in-depth investigation of the environment.

This, much to the frustration of the nuclear physicist performing the research for it, suggested their incompetence. The laboratory was not closed, clearly indicating no radioactivity was found in or around the building. Instead (after 3 months) the government claimed that they had seen nothing.

In Canada, too, says George Wiseman, it has now been officially proven that Brown's Gas can neutralize radioactive waste in seconds, easily and extremely inexpensively. This neutralization treatment can take place right at the nuclear reactor so there is no need to transport or store nuclear waste.

"This issue is so politically HOT that we deliberately do not promote it," says Wiseman. Brown's Gas technology is not firmly enough in general use to prevent suppression by 'vested interest'. This single application is worth billions of dollars and can revolutionize the nuclear power generation industry. However, Wiseman's company sells an 80+ page report ***"Neutralize Radio-Active Waste"*** – order at www.eagle-research.com/cms/node/253

In this lecture https://www.youtube.com/watch?v=_1iq8XnoMxU (starting 25:30 minutes) George Wiseman explains the political/greed-based resistance to doing this.

---

[169] Transmutation: conversion of one chemical element or isotope into another.

Fukushima Mon Amour

Under this heading (French for 'Fukushima My Love' paraphrasing the 1959 anti-war movie 'Hiroshima My Love') Rex Research published 70 official Patents from around the world including USA, Great Britain, Japan, Russia, Ukraine, Europe and others, showing the many techniques Humanity now has to reduce or eliminate radioactivity:

http://www.rexresearch.com/fukushimamour/fukushima.htm

This shows us that using Brown's Gas to treat radioactive waste is only one option out of 70+ techniques. However, its big advantages would be:

a) PORTABILITY – in many cases you cannot haul the contaminated material half way across the world to be treated – you need to neutralize it at the source,

b) AFFORDABILITY and SPEED – since there's nothing to invent and all the investigations and developments have already been done and publicly published, this technique can be readily used in any developed country.

References

- YouTube – "Nuclear Waste Neutralization Using Hydroxy Gas" www.youtube.com/watch?v=1R5G5hTC7pc
- YouTube – "Information on Nuclear Waste Storage & Disposal" www.youtube.com/watch?v=FqImZpjqIgM www.youtube.com/watch?v=3NWtX7IZYjM
- POLITICALLY HOT BROWN'S GAS USES: www.eagle-research.com/browngas/fabuses/possib.php
- www.rexresearch.com/brown-haley/brown-haley.htm
- Burning Water, The Fukushima Solution, Part 2: http://mythicspiral.blogspot.hk/2016/01/burning-water-fukushima-solution-part-2.html
- Scientists Adam Trombly and Patrick Flanagan about cleaning Fukushima: www.youtube.com/watch?v=6j9vBirZlWE
- Page 93 of the presentation `Gallery of Clean Energy Inventions.pdf` by Gary Vesperman: https://app.box.com/v/cleanenergyexhibit
- Ridding the planet of nuclear radiation with the help of nuclear radiation mitigation technologies: www.transitieweb.nl/disclosure/ridding-the-planet-of-nuclear-radiation-with-the-help-of-nuclear-radiation-mitigation-technologies/

Advanced transmutation process and its application for the decontamination of radioactive nuclear wastes

By Andrew Michrowski, PhD, chair of PACE, and
Mark Porringa, a former chief engineer of Chalk River, Atomic Energy of Canada

Proceedings of Congress 2000 at the **University of Alberta**
Edmonton, May 29-30, 2000

Abstract: *There are deviations to the standard model of radioactive atomic nuclei decay reported in the literature. These include persistent effects of chemical states and physical environment and the natural, low-energy transmutation phenomena associated with the vegetation processes of plants. The theory of neutral currents is proposed by Nobelist* ***O. Costa de Beauregard*** *to account for the observed natural transmutations, also known as the Kervran reaction. "Cold fusion" researchers have also reported anomalies in the formation of new elements in cathodes. This body of knowledge provides the rationale for the observed and successful and developed advanced transmutation processes for the disposal of nuclear waste developed by* ***Yull Brown*** *involving a gas developed by him with a stoichiometric mixture of ionic hydrogen and ionic oxygen compressed up to 0.45 MPa. The radioactivity in samples decreases by up to 97%, rapidly, simply and at low cost.*

Current model of decay

Since the discovery of natural radioactivity, it was generally believed that radioactive processes obeyed orderly, simple decay rate formulae and that nuclear processes operated completely independent of extra nuclear phenomena such as the chemical state of the system or physical parameters such as pressure or temperature. A solid body of scientific literature describes a small percentage variation of the order of 0.1 to 5% in the decay constant under a variety of chemical and physical conditions. [5, 6, 8, 10, 11, 21, 24]

The standard definition of half-life or half-decay time is the time taken by a given amount of a particular radioactive substance to undergo disintegration or decay of half of its atoms. Measured half-lives vary from less than a millionth of a second to billions of years in the case of Uranium. There are 4 modes of decay, three are named after the first three letters of the Greek alphabet, i.e., *alpha*, *beta* and *gamma* and the fourth is the recently discovered *proton decay.*

By way of review, for the Bohr-Rutherford model of the atom, the nucleus is composed of the heavy particles or hadron or the proton and the neutron, and is surrounded by a cloud of electrons (or light particles or leptons) the number of which depends on the atomic number (for neutral atoms) and also the valence state (for ionized atoms). *Alpha* particles are Helium nuclei, ${}_4He^2$ consisting of two protons and 2 neutrons; *beta* particles are electrons (negative charge) and positrons (positive charge) and *gamma* rays that are in the short wave length of the electromagnetic radiation band; the proton is a hadron. *Alpha* particles and protons are strongly interacting particles, as are all hadrons.

The current model of *beta* decay is that an inter nucleon neutron spontaneously decays into a proton and an electron (or *beta* particle and an anti-electron neutrino, no → p. + e. + vc. A neutrino is a zero-rest mass spin 1/2 particle that conserves momentum in the decay process. There are many pure beta emitters throughout the periodic table; Carbon 14C and deuterium are two examples. Beta particles penetrate substance less deeply than gamma radiation but are hundreds of times more penetrating than alpha particles. *Beta* particles can be stopped by an inch of wood or by a thin sheet of aluminum foil, for example. The energy of most emitted alpha particles are stopped by a piece of paper and the most energetic gamma rays require a thick piece of lead or concrete.

Electromagnetic radiation emission from atomic processes can be in the x-ray energy range and nuclear in the x-ray and gamma ray energy range.

It is believed that all radioactive atomic nuclei decay spontaneously without prior cause at a specific and steady decay rate that differs for each radioactive isotope. Some precise measurements of half-lives have been made which show deviations of the standard type decay curves that appear to depend on non-nuclear variable conditions in origin and structure.

Past measurements of variations in the decay constant N = Noe-λп with T1/2 = 0.693/λ are based on crude instruments from some 70 years ago. Later, with more sophisticated electronics, the value of λ of the decay of Beryllium 7Be, was first shown in 1949 to deviate by 0.1% between atomic Be and molecular BeO. In 1965, the λ of Niobium, 90Nb, is altered by 4% between the metal and the fluoride form, as discussed by **G. Emery**. **H. C. Dudley** reported on studies that have varied decay characteristics of twelve other radionuclides according to changes in the energy states of the orbital electrons, by reason of pressure, temperature, electric and magnetic fields, stress in monomolecular layers and other physical atomic conditions. [10]

The alteration of decay rates by non-nuclear processes may not be truly random and would seem to require a new theoretical model. As these decays occur, the term nuclear may need to be expanded to include reactions and processes involving the entire atom and even multi-atom crystal matrix forms rather than just mass-energy changes in only the nucleus. [19, 23, 24]

Observed deviations from accepted decay laws

Not too well known is a quite prodigious body of work on the persistent effects of chemical states and physical environment on the deviation from the accepted decay law of nuclear decay rates. Theoretical as well as experimental research has been conducted. [5, 6, 8, 10, 11, 22, 24] In 1947, **R. Daudel** and **E. Segré** predicted that under certain conditions a dependence of the decay constant on the chemical and physical environment of the nucleus should be observable; subsequent to these predictions such a dependence was experimentally observed (with **R. F. Leinzinger** and **C. Wiegand**) in the K capture decay of 7Be and the internal conversion decay of the 99m isomeric state of Technetium.

During the decay process, the chemical environment of the nucleus is changed, thus altering the decay constant. R. Daudel pointed out that the isomeric decay constant of the 2-keV isomeric state transition in the Technetium isotope 99mTc arose from a change in the electron density near the nucleus. **J. C. Slater** suggested that the faster decay rate observed for the RtCO4 compound form is due to a *greater squeezing* of the Tc atoms with the metal Tc-Tc bond distance of 2.7 Å. Note that the symbol Å refers to the distance measure of one Angstrom which equals 10-8 cm.

A good example of the effect of a chemical change in the nuclear environment during radioactive decay is for the intensity change of the 122-keV E2 gamma ray observed for the 90mNb isomeric state of Niobium. This effect on the decay rate for the 21-second transition was an order of magnitude greater and in the opposite direction than observed in 99mTc and was achieved at **Lawrence Berkeley Laboratory** by **J. O. Rasmussen** and his colleagues, **J. A. Cooper** and **J. M. Hollander** in 1965. [24]

In 1975, **Elizabeth A. Rauscher** lengthened *beta* emissions for 20Si simply by surrounding it with specifically designed matrix material, thus lengthening the decay rate by 6% with only 15 minute exposure, demonstrating the impact of environmental conditions on radionuclides.

Natural transmutation

Natural, low-energy transmutation phenomena have been observed for centuries. In 1799, the French chemist, **Nicolas Louis Vauquelin** noted that hens could excrete 500% more lime that they take in as food, suggesting a creation -- transmutation of Calcium Carbonate. Scientific literature notes many similar phenomena that occur in vegetation processes of plants as well where new elements and minerals inexplicably emerge.

Nobel Nominee Prof. **Louis Kervran** replicated these numerous findings and advanced very far the understanding of natural, non-radioactive transmutations, acquiring in this pursuit a term for such transmutations, ***Kervran reaction***, while engendering solid physics support from the **Institut de Physique Théorique Henri Poincaré** physicist, **Olivier Costa de Beauregard**. He stated in 1974 that the theory of weak neutral currents accounts for the transmutations observed, with due respect for the physical laws of conservation. [7, 12, 13, 14] The theory of neutral currents gave its authors, **Sheldon Glashow**, **Abdus Salam** and **Steven Weinberg** the ***Nobel Prize for Physics*** in 1979. De Beauregard proposed the following equations for biological transmutation:

$$n \rightarrow p + e^{-} + \underline{\nu} \qquad (1)$$

$$p + \nu \leftrightarrow p + \nu' \qquad (2)$$

$$p \leftrightarrow p' + \underline{\nu} + \nu' \qquad (3)$$

Table 1. **The Olivier Costa de Beauregard equations for biochemical transmutation**

These equations imply the conversion of a neutron (n) to a proton (p) by virtual exchange processes -- the neutral currents of Weinberg. These processes produce protons (p and p') of different energy levels and two neutrinos (v and v') of different energy levels. v represents the antineutrino and e- the electron. In one state the proton will be bound to an atomic nucleus, and in the other state, it will be relatively free in a chemical binding.

In vitro transmutation

Physicist Dr. **Andrija Puharich** was able to observe and photograph Kervran reactions *in vitro* by using a high-power dark-field microscope that was developed by the Canadian scientist, **Gaston Naessens**. Kervran reactions were documented by him to include the oxygen atom entering into a virtual nuclear reaction with p or n to yield 14N or 19F, by using an electrolytic process similar to that of Prof. **Yull Brown**, as disclosed by Puharich in his U.S. Patent 4,394,230, *Method and apparatus for splitting water molecules.* [20, 21]

There exists as well the phenomenon of transmutative "digestion". **L. Magos** and **T. W. Clarkson** of the British **Research Council Carshalton Laboratories** noted disintegration of the radioactive isotope 203Hg ingested by rats, a volatilization which they ultimately attributed to such bacteria as *Klebsiella aerogenes*. [16]

Cold fusion examples

On June 19, 1995, **Texas A&M University** hosted a low-energy transmutation Conference, sponsored by the "father of electrochemistry", Professor Dr. **John O'M Bockris**. Some of the papers that were presented noted anomalies in the formation of new elements in cathodes -- definitely not sourced from contaminations -- which were involved in cold-fusion experiments. For example: Drs. **T. Ohmori** and **Reiko Notoya**, both of **Hokkaido University**, reported Iron formation in Gold and Palladium cathodes, Potassium changing into Calcium, Cs133 producing an element of mass 134, and Na23 becoming Na24; Dr. **John Dash** of **Portland State University** reported spots of silver, cadmium and gold protruding in palladium electrodes in both light and heavy water cells; Dr. **Robert Bush** of **California Polytechnic, Pomona**, reported strontium on the surface of nickel cathodes. [18]

Another development is the system that reduces radioactive material by electrolysis using palladium-coated microspheres of a beads as a catalytic agent was patented by James A. Patterson. [17]

Low-temperature transmutation

Very pertinent is the long-term research by Dr. **Georgiy S. Rabzi** of the **Ukrainian International Academy of Original Ideas** who reported his analyses of the mechanism of low-temperature transmutation, which he has conducted since 1954. He passed out samples to attendees: a steel nut that acquired the color of copper and was reduced in size; magnetic stainless steel turned non-magnetic, asbestos which became like ceramic. No radioactivity had been observed in any of his experiments and he is convinced that radioactive wastes can be stabilized. [19]

These observations, originating from various domains of scientific research form a solid case of low-level advanced transmutation -- with minuscule power and signal strength and sometimes without any, i.e. in nature alone.

Advanced transmutation: disposing of nuclear waste

Experimental results obtained by advanced transmutation have direct bearing on the problem of disposal of nuclear wastes.

The first relies on the interaction of nuclear wastes with ionic hydrogen and ionic oxygen gas known as Brown's Gas. Brown's Gas has been developed by a Bulgarian-born Australian national, Prof. **Yull Brown**. In his process, water is separated into its two constituents, hydrogen and oxygen in a way that allows them to be mixed under pressure and then burned simultaneously and safely in a 2:1 proportion. The process results in a gas containing hydrogen and oxygen in the required proportions that can be generated economically and safely and be compressed up to 0.45 MPa. [1, 3, 4]

At this time, Brown's Gas generators are mass-produced in the Bautou, a major research city in the People's Republic of China by the **NORINCO** factory which also manufacturers locomotives and ordinances -- and services the nation's nuclear industry complex. Most of these generators (producing up to 4,000 litres/hour/2.4 litres of water at 0.45 MPa with power requirements ranging from 0.66 kW/hr up to 13.2 kW/hr) are marketed for their superior welding and brazing qualities, costing between $ 2,000 and $ 17,000. Other models, usually near the 1,000 litres/hour range are being manufactured in smaller quantities in several countries. Some units have been used for the decontamination of radioactive materials since 1991. Brown's Gas generators produce between 300 and 340 litres of Brown's Gas per 1 kW/hr energy DC current approximately and one litre of water produces about 1,866.6 litres of gas. A generator that produces 10,000 litres per hour has been built specifically for the reduction of nuclear waste. Prof. Brown first successfully reduced radioactivity radionuclides of Cobalt 60 in his laboratory in Sydney, Australia with initial experimental results of about 50%. [25]

On August 24, 1991, Baotou's **Nuclear Institute # 202** released a report, ***The results of experiments to dispose of radiation materials by Brown's Gas*** which establishes that experimentation on Cobalt 60 radiation source decreased radiation by about 50%. [2] The treatment involved exposures to Brown's Gas flame, *lasting only a few minutes,* as in the samples described in the table below:

	First Experiment	Second Experiment
Source Intensity	580 millirads/hour	115 - 120 millirads/hour
After Treatment	220 - 240 millirads/hour	42 millirads/hour

Table 2. **Reduction of radioactivity of Cobalt 60 by exposure to Brown's Gas flame for less than 10 minutes. 1991 experiments conducted by Baotou Nuclear Institute # 220, People's Republic of China.**

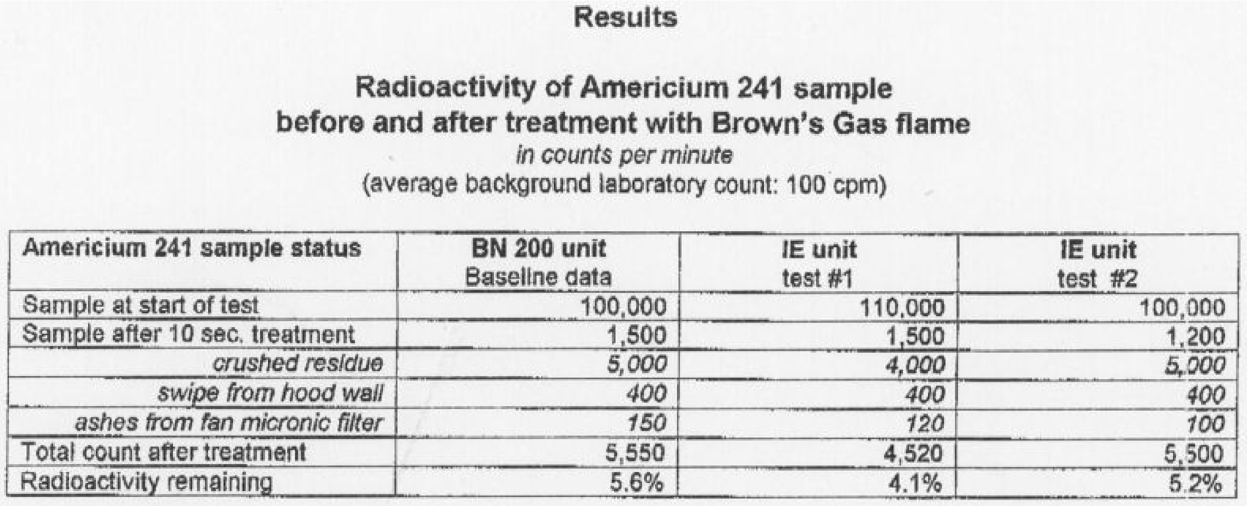

Results

Radioactivity of Americium 241 sample
before and after treatment with Brown's Gas flame
in counts per minute
(average background laboratory count: 100 cpm)

Americium 241 sample status	BN 200 unit Baseline data	IE unit test #1	IE unit test #2
Sample at start of test	100,000	110,000	100,000
Sample after 10 sec. treatment	1,500	1,500	1,200
crushed residue	*5,000*	*4,000*	*5,000*
swipe from hood wall	*400*	*400*	*400*
ashes from fan micronic filter	*150*	*120*	*100*
Total count after treatment	5,550	4,520	5,500
Radioactivity remaining	5.6%	4.1%	5.2%

In another test conducted by Yull Brown before a public audience including U.S. Congressman Hon. **Berkeley Bedell** with committee responsibilities in this area of concern, the experiment ran as follows as reported by the press:

Using a slice of radioactive Americium ... Brown melted it together on a brick with small chunks of steel and Aluminum ... After a couple of minutes under the flame, the molten metals sent up an instant flash in what Brown says is the reaction that destroys the radioactivity. Before the heating and mixing with the other metals, the Americium, made by the decay of an isotope of Plutonium, registered 16,000 counts per minute of radiation. Measured afterward by the [Geiger Counter], the mass of metals read less than 100 counts per minute, about the same as the background radiation in the laboratory where Brown was working. [2]

This experiment indicated a reduction of radiation in the order of over 99% (to about 0.00625 of original level) -- in less than 5 minutes, with minimal handling. The improvement in the reduction of radioactivity process from about 50% to nearly 100% has come only with persistent research over the decades by Brown and his colleagues. The Brown's Gas generating units that produced such effects are not expensive -- a far cry from the multi-million processes tabled by atomic energy agencies worldwide. They are powered by low energy requirements and require only small volumes of water, at most a few litres per hour as fuel. Furthermore, the training required for operation is minimal.

The Hon. Bedell has reported, *"It has been my good pleasure to witness experiments done by Prof. Yull Brown in which it appeared to me that he significantly reduced the radioactivity in several nuclear materials. Under the circumstances, I believe it is very important for our federal government to completely investigate Dr. Yull Brown's accomplishments in this area."* [9]

On August 6, 1992, almost a year after the Chinese nuclear report, Prof. Yull Brown made a special demonstration to a team of 5 San Francisco field office observers from the **United States Department of Energy**, at the request of the Hon. Berkeley Bedell. Cobalt 60 was treated and resulted in a drop of Geiger readings from 1,000 counts to 40 -- resulting in radioactive waste residue of about 0.04 of the original level. Apprehensive that somehow the radioactivity might have been dispersed into the ambient environment, the official requested the **California Department of Health Services** to inspect the premises. The health services crew found no radioactivity in the air resulting neither from this demonstration nor from another repeat demonstration held for their benefit. [9] This sequence of experiments was monitored by the Hon. **Daniel Haley**, the legislator who established the forerunner **New York State Energy Research and Development Agency**.

Other demonstrations, measured with under more sophisticated protocol and instrumentation have been conducted before Japanese nuclear experts, including four scientists from **Toshiba** and **Mitsui**: Cobalt 60 of 24,000 mR/hr reduced with one treatment to 12,000 mR/hr. The Japanese scientists were so excited by what they saw that they immediately purchased a generator and air shipped it to Japan. They sent Prof. Brown a confidential report of some of their results. Subsequently, they tried to obtain additional Brown's Gas generators directly from the People's Republic of China.

In 1999, one of the authors, **Mark Porringa** (responsible for one of the world's largest research reactors) used Brown's Gas to process a 1.0 uCi sample of Am^{241}, a weak alpha emitter with a half-life of 461 years. The radiation levels were reduced from over 70,000 cpm down to less than 6,000 cpm in less than 1 minute without any attempt at optimization. This would normally require thousands of years by natural decay processes. Yull Brown originally developed the proprietary protocol used. The author suspects from his tests and theory that a wide variety of radioactive wastes or undesirable materials such as plutonium would respond in like manner.

This paper has been possible by the advice and help of Tom E. Bearden,
John O'M. Bockris, Yull Brown, Olivier Costa de Beauregard, Hal Fox,
Elizabeth A. Rauscher, Glen Rein, William A. Tiller, Tom Valone, William Van Bise.

References

1. *Anomalous water -- explained by Brown's Gas research.* ***Planetary Association for Clean Energy Newsletter***. Vol. 6 (4), July 1993. p. 11 - 12.

2. Bird, Christopher. *The destruction of radioactive nuclear wastes: does Professor Yull Brown have the solution?* ***Explore!*** Volume 3, Number 5. 1992. p. 3.

3. Brown, Yull. *Welding*. **U.S. Patent 4,014,777**. March 29, 1977. ["The invention also relates to atomic welding to which the mixture {of hydrogen and oxygen generated ion substantially stoichiometric proportions} is passed through an arc causing disassociation of both the hydrogen and oxygen into atomic hydrogen and oxygen which on recombination generate an extremely hot flame."]

4. Brown, Yull. *Arc-assisted oxy/hydrogen welding*. **U.S. Patent 4,081,656**. March 28, 1978.

5. Bruch, R., Elizabeth A. Rauscher, H. Wang, T. Tanaka and D. Schneider. ***Bulletin of the American Physical Society***. Volume 37, 1992. [Discusses nature of variable decay rates of the radioactive nuclides, and the basis for their interaction with electromagnetic and gravitational forces].

7. Bruch, R., Elizabeth A. Rauscher, S. Fuelling, D. Schneider. *Collision processes of molecules and atoms*. In: L. Byass, editor. **Encyclopedia of applied physics**. American Institute of Physics. 1993. [Discusses nature of variable decay rates of the radioactive nuclides, and the basis for their interaction with electromagnetic and gravitational forces].

8. Costa de Beauregard, Olivier. *The expanding paradigm of the Einstein Theory.* In: Andrija Puharich, editor. **Iceland Papers**. New York. Essentia Research Associates. 1979. 190 p.; p. 161-189.

9. Dudley, H. C.. *Radioactivity re-examined.* CAEN Editors. April 7, 1975. [Review of deviation of radioactive decay rates].

10. Haley, Daniel. *Transmutation of radioactive materials with Yull Brown's Gas -- 2500% radioactivity reduction*. ***Planetary Association for Clean Energy Newsletter***. Vol. 6 (4), July, 1993. p. 8 -9.

11. Harada, K. and Elizabeth A. Rauscher. *Unified theory of Alpha decay*. **Physical Review**. Volume 169, 1968. P. 818

12. Harada, K. and Elizabeth A. Rauscher. *Alpha decay of Po212 → Pb208, , Po210 → Pb206, treated by the Unified Theory of Alpha decay.* UCRL-70513, May 1967.

13. Kervran, C. Louis. **Biological transmutations**. Magalia, CA. Happiness Press. 1989. 163 p.

14. Kervran, C. Louis. *Transmutation of the elements in oats: new analyses.* ***Planetary Association for Clean Energy Newsletter***. Vol. 2 (3), July/August 1980. p. 4-6.

15. Kervran, C. Louis. **Transmutation à faible énergie**. Paris Maloine. 1972.

16. Magos, L. and T. W. Clarkson. *Volatilization of mercury by bacteria*. **British Journal of Industrial Medicine**. October 1964. p. 294-8.

17. Patterson, James A.. *System with electrolytic cell and method for producing heat and reducing radioactivity of a radioactive material by electrolysis*. U.S. Patent 5,672,259. September 30, 1997.

18. Rabzi, Georgiy S. *Mechanism of low temperature transmutation*. In: John O'M. Bockris. Proceedings of Low-energy Transmutation Conference, Texas A&M University, June 19, 1995. [Available from ***New Energy News***, P. O. Box 58639, Salt Lake City, Utah 84158-8639; (801) 583-6232, fax: 583-2963]

19. Rauscher, Elizabeth A. and R. Bruch. **S-matrix theory of Alpha decay**. [Book manuscript in progress.]

20. Puharich, Andrija [Henry K.]. **Successful treatment of neoplasms in mice with gaseous superoxide anion (O2) and Ozone (O3) with rationale for effect**. New York. Essentia Research Associates. [Presented to Sixth Ozone World Congress. International Ozone Association. May 26-28, 1983. Washington.] 89 p. [Pages 5-7 discuss numerous *in vitro* biological transmutation or Kervran reactions.]

21. Puharich, Andrija [Henry K.]. *Method and apparatus for splitting water molecules.* **U.S. Patent 4,394,230**. July 18, 1983.

22. Rauscher, Elizabeth A.. **Study and application of the modification of nuclear decay rates by changes in atomic states**. Tecnic Research Laboratories, Nevada. April 1993. 28 p. [Protocol for design, test and implementation of decay rate change effects to nuclear waste materials].

23. Rauscher, Elizabeth A. **The properties of Plutonium and comparison to other metallic elements.** University of California, Lawrence Berkeley Laboratory. February 23, 1991. [Set basis for variable decay rates of the radioactive nuclides -- and their interaction with electromagnetic and gravitational forces].

24. Soinski, A. J., Elizabeth A. Rauscher and J. O. Rasmussen. *Alpha particle amplitude and phases in the decay of 253Es.* ***Bulletin of American Physical Society****.* Volume 18, 1973. p.768. [Modulation of decay rate of radionuclides by extra nuclear environmental conditions].

25. *Yull Brown's Gas.* ***Planetary Association for Clean Energy Newsletter***. Vol. 6 (4), July 1993. p. 10 - 11.

Chapter 26.

Backyard & Student Developments

Many of my readers built the DIY Waterfuel system that I've developed based on know-how from Tom and Bill Lang of California/Florida, USA. There have been many versions before and after (the one shown is Jerry Young's semi-trailer installation) – and that's a very good thing!

In this chapter you will see only a few examples of Waterfuel projects built by Waterfuel enthusiasts with results that went far beyond what they were initially allowed to believe.

Water4Gas on Diesel 18-Wheelers (Lorries)

In separate cases and states, successes have been demonstrated on 12.7-liter turbo-Diesel 18-wheeler trucks, using simple 6-cell designs BUILT BY THE DRIVERS based on my **Water4Gas** books that they have purchased from me for $97.

- ☐ Both owner-operators reported an average of at least 20% better fuel economy (steady), as well as higher power and torque with much less emissions.
- ☐ They proved not only that **Water4Gas** works, but also that HHO in ***small*** quantities – generated by ***simple*** DIY installations – goes a long way.
- ☐ The savings in direct expenses (at the pump) and indirect expenses (long term lowered maintenance, clean oil that needs no change, etc.), have been calculated by the truck owners/operators to cover their very-low-investment (roughly $200-$300 in information and hardware) in a matter of days.

Carter Blankenship III, Tennessee, 2008

The first big-rig owner-operator was Carter Blankenship III from Tennessee, who sent me his own written and photographed testimonials. The original developers, Bill and Tom Lang, have visited Blankenship later in 2008 and have seen the installation on his big rig truck. Blankenship reported economy gains between 20% and 26%, and higher torque with full load.

The photo above shows the 6-cell **Water4Gas** system installed (in the blue milk crate near the engine). The truck is a Kenwood 1999, with a Detroit 12.7 liter turbo Diesel engine. Blankenship reported that the engine felt “like new” with **Water4Gas**, although it had over 1 million miles on it (the engine was built in 1994)!

Jerry Young, Nevada

The second big-rig owner-operator was Jerry Young from Nevada, who first showed me his truck installation during my 2008 **Water4Gas** USA Tour. Later in 2009 I visited Young's home in Nevada and carefully documented and filmed the entire installation on his truck shown below. The *complete* and original installation details and photos are available, free of charge, from www.water4gas.com

If you need more information please contact www.water4gas.com

In later years he sent me photos of his fourth-generation systems that require far less maintenance and get the same or better mileage gains averaging 20%-25% on big rigs:

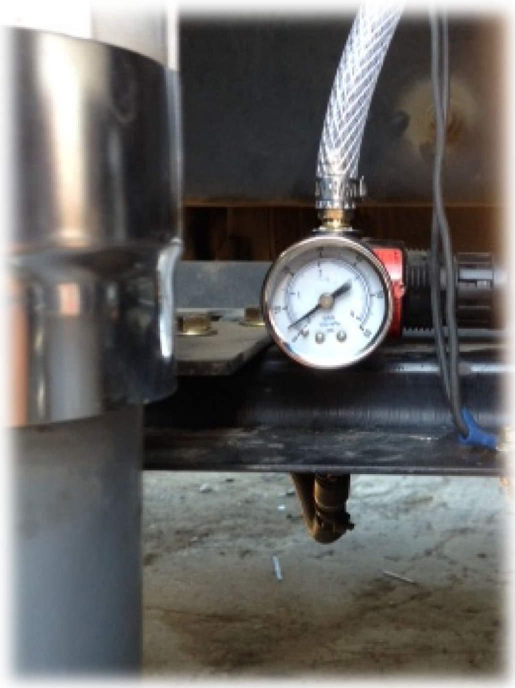

The interviews and the technology adaptations from Young were fully organized and exposed in the **Water4Gas** books available for download at www.Water4Gas.com

I expect Waterfuel trucking to expand due to the combination of several factors:

1. The enforcement of strict emissions regulations enforces truckers to install expensive emission control systems – or buy new trucks.
2. The trucking industry is suffering badly from the down-turning economy.
3. The combined effect of the above factors force **smart** truckers to place their business on hold because they see that with every mile on the road, the truck actually loses money. Other owner-operators cannot see the long-term losses and continue to drive themselves to oblivion. These conditions threaten the health of our entire economy.

Urine-Powered Generator Developed by Four Nigerian Schoolgirls

This may sound like yet another Nigerian scam, but it's nothing of the sort! With the help of their teacher, these schoolgirls →→ Duro-Aina Adebola (14), Akindele Abiola (14), Faleke Oluwatoyin (14) and Bello Eniola (15) from Lagos, Nigeria, have developed a safe and workable method to turn human urine into low-cost energy.

This was reported by Maker Faire Africa, Reuters® and others. The principle has been discovered by Ohio University scientists and further developed by these schoolgirls into a working prototype: urine contains lots of hydrogen bonded with nitrogen.

According to theoretical calculations 1 Liter of urine gives you 6 hours of electricity, 1 cow's urine could power 19 homes, while 1 gallon of urine could propel a urine-powered vehicle for a nice 90-mile trip…

What makes Nigerians enthusiastic about such DIY technology? Their country is rich in fossil fuel – yet most of the population is starving for energy. Millions live on portable generators that they can only afford to operate a few hours a day. Every bit of fuel savings means more hours of electricity.

How their system works: Urine is put into an electrolyzer having nickel electrodes (theirs looks like a car's battery seemingly made of six cells, ← shown to the left of the red generator). It produces hydrogen that goes into a water "bubbler" for purification. The gas continues and travels by its own pressure into a gas bottle and then into a cylinder that uses liquid borax to dry out the gas. The resulting dry hydrogen is fed to the generator. Simple yet revolutionary!

Pickup trucks with home-made Water4Gas

FROM THE PRESS — KATU (ABC News), OREGON:

Ray Warren from Linn County, Oregon, doubled his pickup's gas mileage *from 15 MPG to 30 MPG* in town! I think that's fabulous, Ray!

My deepest appreciation and gratitude to KATU (Portland News www.KATU.com) and their staff for airing this piece of good news and leaving it online for years. ~Ozzie Freedom

Formula for cheaper gas: Baking soda, water, $200

By Melica Johnson and KATU Web Staff | Published: Jul 24, 2008 at 7:33 PM PDT | Last Updated: Nov 20, 2008 at 11:41 PM PDT

MILLERSBURG, Ore. - According to a Linn County man, some water, baking soda and $200 worth of instructions and supplies will outfit you with technology that will cut your fuel bill in half.

Ray Warren said he installed a hydrogen generation s purchased off the internet, and that he has doubled hi to 30 miles per gallon.

Link to m

Warren claims this is no lie and that you can do it too.

Copyright © 2012 Fisher C

Formula for cheaper gas: Baking soda, water, $200

Story Published: Jul 24, 2008 at 7:33 PM PDT
Story Updated: Nov 20, 2008 at 11:41 PM PDT

By Melica Johnson and KATU Web Staff

MILLERSBURG, Ore. - According to a Linn County man, some water, baking soda and $200 worth of instructions and supplies will outfit you with technology that will cut your fuel bill in half.

Ray Warren said he installed a hydrogen generation system in his pickup using

FROM THE PRESS — WVEC-TV (ABC News), VIRGINIA:

Art Green from Norfolk, Virginia, has more than doubled the mileage of his then new 2008 Chevy Avalanche *from 20 to 40 MPG* ***(200%)*** on the highway — and in town *from 8 to 20 MPG!!* ***(250%)***

I would like to also commend Mr. Green for his continual support by providing important experimental tips for the benefit of others experimenters. Thanks, Art!

Consumer

Norfolk man pumped about savings with water-for-gas conversion

WVEC.com
Posted on August 15, 2009 at 5:00 PM
Updated Wednesday, Oct 28 at 2:43 PM

NORFOLK - 13News viewers want to know whether Art Green is really saving money turning water into fuel to run his pick-up truck.

A month ago, he installed a water-for-gas unit on his Chevy Avalanche.

My deepest appreciation and gratitude to WVEC (nowadays www.13newsnow) and their staff for airing this piece of good news and leaving it online for years.
~Ozzie Freedom

Local 10 News – circa 2008 – Mileage gains 32%-35% on Ford 250, Cadillac V8 and more

My deepest appreciation and gratitude to Local 10 News (www.local10.com) and their staff for airing this important piece of good news. ~Ozzie

Images: https://www.youtube.com/watch?v=n_tcCLkvTGg

Laurie Jennings and Jeff Weinsier reported on Local 10 news (www.local10.com) that a local business was installing hydrogen on demand systems.

Whoever knows these systems will immediately recognize the multi-cell **Water4Gas** systems, made (legally) right out of my books. Judging by the newscast, the installers did a very neat job – and the customers were happy. Weinsier interviewed Mark Carpenter about the **Water4Gas** multi-cell installation in his Ford 250 pickup truck.

Carpenter reported that his mileage increased from 9.8 MPG to 13.3 MPG. Weinsier immediately remarked "Might not sound like a lot" – but this is an ***incredible 36% mileage gain*** for a heavy pickup truck. Another driver reported a ***mileage gain of over 32% – on a V8 Cadillac.*** Although no double mileage here, these are typical results ***for a Waterfuel installation done well.***

Chapter 27.
Commercial Developments — PAST & PRESENT

Canadian Inventor Turns Own Need into a World-Renowned Brown's Gas Business

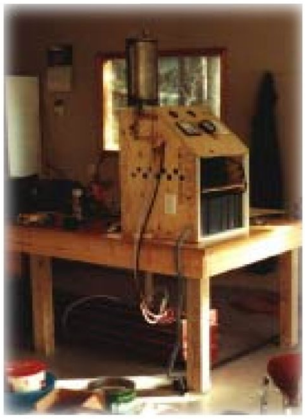

Mr. George Wiseman, the Founder of Eagle Research from British Columbia, Canada, got into Brown's Gas simply because he wanted a Brown's Gas machine in his own workshop. This is not about car electrolyzers but rather about large Waterfuel-torches used for high-energy welding, cutting, brazing, etc. Why would one want a water-torch? What's wrong with arc/acetylene that everybody and his brother are happy with (or are they)? Because it does a much better job safer – and faster. This has become famous after Denny Klein's interview on Fox News went viral on YouTube and still continues to circulate with millions of combined views. Brown's Gas had the unique properties that Wiseman wanted.

It was in 1991 that Mr. Wiseman could not afford to buy a Brown's Gas machine. He therefore applied his considerable innovative resources to build his own. By applying techniques learned during his **Free-Energy** (see Glossary) research, he ended up with a technology that was half the size and weight, while being twice as efficient as traditional electrolyzers. He wrote books detailing his research in order to teach anyone how to build the world's most practical electrolyzers.

In the process of developing the Brown's Gas technology for his own use, Mr. Wiseman started discovering other uses for the gas. Realizing both the tremendous benefits possible to our civilization and the huge profit potential, he started to manufacture versions of his electrolyzer.

Since Wiseman did not patent his inventions deliberately and even released the knowledge in highly detailed books, many of the Brown's Gas machines now sold in South Korea and many other places worldwide are made by his students. He willingly contributed vital materials for this book, too. That's why I see George Wiseman as a pivotal contributor to the advent of Waterfuel technology and its industry.

From DIY to Commercial Industry

The energy saving devices published in my **Water4Gas** books were announced public domain from Day 1. Soon after my readers created a large industry based on these devices, and sold them everywhere: eBay, their own websites, etc. THEY STILL DO TO THIS DAY, selling electrolyzers, systems and devices like this (its original looks…) → I invented this electronic device and taught my readers and students *how to manufacture it cheaply.* My students moved it forward and re-designed it to look professional and attractive – see samples below that I recently collected online. ***Long-term industry started with 2 books and my free tech support.*** This is the effect of the spirit of sharing, which makes the Waterfuel industry flourish despite lack of government support. A grassroots movement – one where the people take care of each other – turned into a commercial industry.

Can water itself be used as engine fuel?

According to Inventors Hendrik Loggers and Gijsbert Versteeg from the Netherland, an emulsion of water – at least 77% water by weight – mixed with regular car fuel or vegetable oil and an emulsifier, can be used to fuel a car. An emulsifier is a low-cost chemical used to force water and oil to mix, creating a milk-like substance (not like real milk but more like *homogenized* milk which is fully emulsified).

The inventors claim that this resulting mix would drive a gasoline/Diesel car with less pollution and better economy. They mention previously known inventions such as water-and-gasoline mixture known in the US as "dry gas" (smaller percentage of water but still useable). They also mention Austrian inventor Gerhard Auer that invented fuel-water emulsions containing less than 70% water by volume. They calculated that a 90% reduction of emissions is possible, along with higher engine cylinder pressure while lowering the ignition temperature.

Israeli scientists Dr. Moshe (Lev) Lerner, Sergey Gannotsky and Ilia Sinelnikov may have the advantage of coming up with a commercial system to drive on a mixture of:

a) ***60% water***
b) 38% Methanol, and
c) 2% (secret) acids.

Image: YouTube - Dr. Lerner's experiment and a road test demonstrating engine power boost
HEBREW: https://www.youtube.com/watch?v=X2nSqrlWwEU
RUSSIAN: https://www.youtube.com/watch?v=H68xZ0B4eXE

The company's name is CMC Israel Haber Lerner Ltd., And their sister/sponsor company in the USA is called Clean Motors Corporation (Brooklyn, New York). The company's website http://clean-motors.com offers interesting fuel additives that produce hydrogen and oxygen to be fed into the engine. The additives offered at this time of writing contain between 10%-40% of fuel for Diesels, and between 30%-50% of fuel for gasoline cars.

However, the company scientists were filmed by Israeli TV (Channel One) and the Russian channel RTV1, demonstrating the system on a Israeli van. Below are excerpts related to the articles:

Dr. Moshe (Lev) Lerner, Director of Clean Motors Corporation said on that interview: "These components make hydrogen. It is 60% water, 38% Methanol and 2% acid. First and foremost [the system enhances] the quality of the environment. It reaches 80 to 90 percent of cleaning of toxic gas. It means a full combustion. Secondly, [it provides] more energy up to 40%. Thirdly, it can work with all types of petrol."

In their interview, Professor Eran Sher of Ben Gurion University, Israel, said: ***"So they use part of the exhaust gas to produce another fuel, maybe more energetic fuel, that hydrogen, and when they introduce the hydrogen into the regular fuel then the combustion becomes much more efficient, much more faster and less pollutants."***

Much more on this subject in Chapter 24.

Israeli Car Runs On Water and…Aluminum

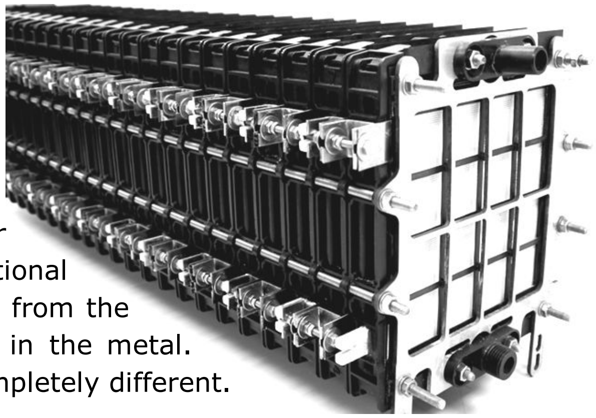

Israeli firm Phinergy, headed by entrepreneur and inventor Aviv Tzidon, has developed a new type of vehicle that at first glance may looks like a "water car." However, in actuality it's an electric vehicle that uses water as a fill-up while you drive. Aviv explains that the car, propelled by an electric engine, draws its electrical energy from the reaction between aluminum and air in its special "battery." Unlike conventional batteries, this battery freely breathes oxygen from the ambient air to release the energy contained in the metal. It's not fuel cell technology but something completely different.

The latest development operates ***with*** water (not ON water) as it is consumed by the aluminum-air battery. The car has two batteries; one is a lithium battery and the other an aluminum-air battery. When the aluminum air battery reacts with atmospheric oxygen, electrical power is produced, and this energy recharges the lithium battery, which in turn allows the car to continue running.

The large yet rather lightweight aluminum-air battery is made of many metal modules that must be replaced every 12,000 miles or so. ***Water comes in the picture WHEN YOU'RE ON THE ROAD.*** As water is consumed in the process, you need to fill up the water tank every 200 miles or so, just as you would a gasoline car. The battery still needs to be replaced (per my understanding, sent to be refurbished in the factory where the aluminum is recycled, not discarded) so it's not the same "water-car" that everybody's dreaming about, and it doesn't even have an ICE, yet it's a very interesting product because on an everyday basis you basically "drive on water."

It's all new to me, and I bet to you too. To understand how the system works visit their YouTube channel and watch the demo: http://www.youtube.com/user/PhinergyTV or their website **www.phinergy.com**

The hybrid sum of several technologies, namely a unique aluminum-air battery, lithium battery, an electric engine AND WATER, results in a car that can drive more than three times the range of electric vehicles you can buy today. Assuming you have tap water.

Tzidon said on TV that he's working with French automaker Renault® to make this technology available to the public in the very near future (2017 was mentioned as a time target for a commercial car). In the longer run they seek off-road applications for these batteries such as boats, consumer electronics and industrial applications. The technology emerged from the research by Prof. Arie Zaban, Director of the Institute of Nanotechnology and Advanced Materials (BINA) at Bar-Ilan University, Tel-Aviv, Israel.

VydroTech (formerly "Ronn Motors")

Eddie Alterman of Men's Journal Magazine described the car shown below as "God's Own Super Car." The Scorpion car was equipped with 450 HP, while maintaining 40 MPG. Its built-in HHO system was designed to extend the car's fuel economy by 20-40%, and increase the engine's torque by up to 10%. Not bad for a muscle car!

They started out as a small but determined auto maker out of Horseshoe Bay, Texas. They used their professionally designed HHO system **H2GO™** to boost their own super-car design to higher heights of both performance and fuel economy. In my humble opinion, Ronn Motors has made larger automakers realize that HHO car is an unavoidable reality, and I'm sure they are watching – and planning when and how to jump into the game.

In 2012 they announced a new name for the company - VydroTech. This is how they described their revised targets in their press release of that time:

> ***Effectively immediately the Ronn Motor Company has elected to re-brand the company consistent with its re-focused vision -- to undertake the creation of revolutionary and environmentally responsible products for the global marketplace. The company has chosen to focus on being a hydrogen technology company, and the changed name of the company reflects this focused business strategy.***
>
> ***Given the pressures of the price of fuel and the demand by the public and the government to lower emissions, the company positioned itself to focus on addressing these immediate fuel consumption and emission issues rather than building exotic supercars.***

The new commercial developments by VydroTech include Waterfuel products for medium to large trucks as well as ***marine Diesel solutions*** (see product photo, taken from their website) in which they anticipate boosting efficiency by ***10-30% and payback period between 3-6 months.*** Nice! Moreover, they offer to make it even easier for customers: using their "No Out of Pocket Operating or Capital" leases, you can use the monthly savings to fund the capital purchase. Visit their website **http://vydrotech.com** for more information.

Practical Waterfuel DIY Systems Here and Now

Waterfuel systems are available today for self-installation, as well as open-source instructions on how to build, install and fine-tune them. The popular field is Brown's Gas systems to fit any size vehicle. The information is distributed worldwide on Waterfuel websites such as www.Water4Gas.com and many others. Additionally, INSTALLATION locations are popping up across the globe, making the tech accessible to non-technical Waterfuel enthusiasts.

Why Invent the Wheel???

In their research paper titled "Emission Control with Lean Operation Using Hydrogen-Supplemented Fuel" (SAE Paper # 740187, published in ***1974***), authors Stebar and Parks from the Research Labs of ***General Motors Corporation,*** presented the benefits they have discovered for "hydrogen-supplemented fuel" and stated that:

> ***"The success of the hydrogen-supplemented fuel approach will ultimately hinge on the development of both a means of controlling hydrocarbon emissions and*** *a suitable hydrogen source on board the vehicle.* ***Reported efforts to develop a satisfactory onboard hydrogen generator*** *(gasoline reformer)* ***appear restricted by fuel economy considerations."***

That was ages ago! And the problem they were facing was a real one: gasoline reformer is basically the method for extracting hydrogen out of fossil fuel. Technically, a very good idea. The problem was and still is the high cost of fossil fuel… The sensible solution is to do what we now do best – produce hydrogen from water – or in this context "water reformer" if you will, assisted by the latest cell developments and the latest advancements in electronics to maximize the economical aspects of the process.

In other words, we don't need to try and prove that supplemental hydrogen is beneficial and we don't need to repeat the recommendation of old timers to do it ON BOARD THE VEHICLE rather than in a factory. Hydrogen "reforming" out of water is all we need in order to come full circle and improve the modern vehicle with no further delays.

Commercial Application of Brown's Gas to Health and Beauty

Award-winning company Epoch Energy Technology Corp. (www.oxy-hydrogen.com) from Kaohsiung City, Taiwan, has develop a series of esthetically-designed machines for use in health and beauty applications. First announced in March 2015 at the Kaohsiung Health Product Show, in 2016 they sublicensed it to be mass produced in Japan – a country which has a huge market for health and beauty products, not only for the elderly.

The principles, Patents and science of using HHO (Brown's Gas) for health and beauty purposes are described in the **Patent Showcase** chapter above, in the section titled "Therapeutic Brown's Gas Patents".

Mr. Jacky Lin, Chairman of Epoch, introduces their HHO Health & Beauty machine

At this time of writing they offer three different sizes for sale, with the red-on-white butterfly design having the most chic IMHO.

There are clinics and beauty salons using these machines (any business ideas come to mind?)

Cleaning Engines as a Service (no installation!!)

Shown below are three UK commercial ads I randomly picked from Facebook. When you search the keywords 'engine carbon cleaning mobile' you will find more. These are typically small or home-based businesses that have purchased an industrial-strength Brown's Gas generator, put them on a minivan and then they either go to client or clients come to them for carbon cleaning of their vehicle engines. It is definitely a mobile, low-investment and easy to do business.

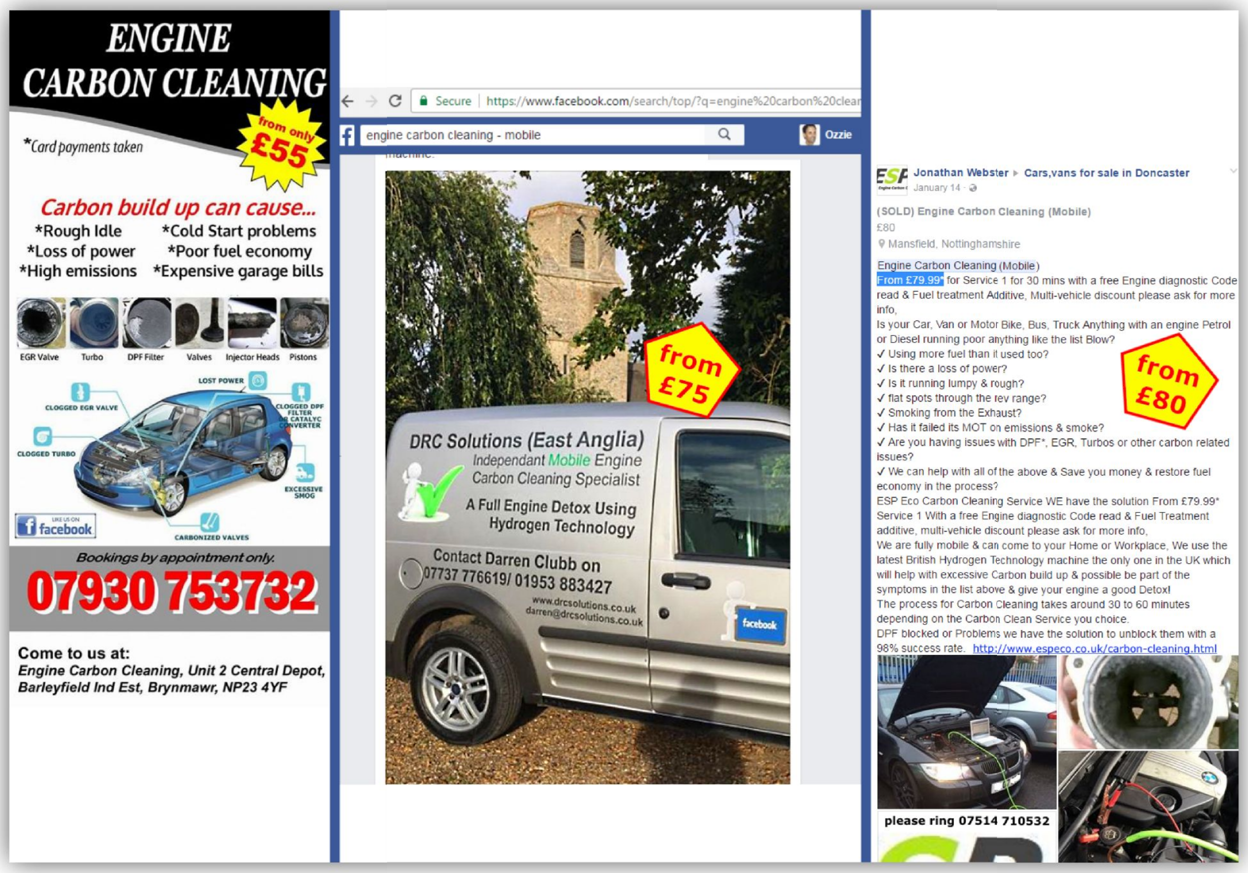

Carbon build up can cause...
*Rough Idle
*Cold Start problems
*Loss of power
*Poor fuel economy
*High emissions
*Expensive garage bills

Bookings by appointment only.
07930 753732

Come to us at:
Engine Carbon Cleaning, Unit 2 Central Depot,
Barleyfield Ind Est, Brynmawr, NP23 4YF

Jonathan Webster ▸ Cars,vans for sale in Doncaster
January 14

(SOLD) Engine Carbon Cleaning (Mobile)
£80
Mansfield, Nottinghamshire

Engine Carbon Cleaning (Mobile)
From £79.99* for Service 1 for 30 mins with a free Engine diagnostic Code read & Fuel treatment Additive, Multi-vehicle discount please ask for more info,
Is your Car, Van or Motor Bike, Bus, Truck Anything with an engine Petrol or Diesel running poor anything like the list Blow?
✓ Using more fuel than it used too?
✓ Is there a loss of power?
✓ Is it running lumpy & rough?
✓ flat spots through the rev range?
✓ Smoking from the Exhaust?
✓ Has it failed its MOT on emissions & smoke?
✓ Are you having issues with DPF*, EGR, Turbos or other carbon related issues?
✓ We can help with all of the above & Save you money & restore fuel economy in the process?
ESP Eco Carbon Cleaning Service WE have the solution From £79.99* Service 1 With a free Engine diagnostic Code read & Fuel Treatment additive, multi-vehicle discount please ask for more info,
We are fully mobile & can come to your Home or Workplace, We use the latest British Hydrogen Technology machine the only one in the UK which will help with excessive Carbon build up & possible be part of the symptoms in the list above & give your engine a good Detox!
The process for Carbon Cleaning takes around 30 to 60 minutes depending on the Carbon Clean Service you choice.
DPF blocked or Problems we have the solution to unblock them with a 98% success rate. http://www.especo.co.uk/carbon-cleaning.html

The technique is as simple as hooking up the Brown's Gas machine to the engine's intake (see image below) and letting it run for about 20-40 minutes with the gas doing the cleaning. Or more correctly, helping the engine clean itself.

It's not done only in the UK. You can find YouTube videos showing the same done in Taiwan, Australia, Singapore and other places. I think this is one of the easiest Waterfuel business opportunities in existence today. In Chapter 41 you will find a principal business plan for such a business.

Waste Disposal with HHO/Brown's Gas

Gyeonggi-do, South Korea: Infectious/industrial waste incineration and melting system using Brown Gas

Infectious waste is incinerated under higher temperature of 850-950°C and bottom ash is melted with fly ash in high temperature condition inside the melting channel (1,450-1,500°C). Emission gas generated during incineration and melting process is burned in the second-round incineration room (1,100°C). It is a comprehensive incineration and melting system without emission of secondary pollution such as smoke and ill-smell.

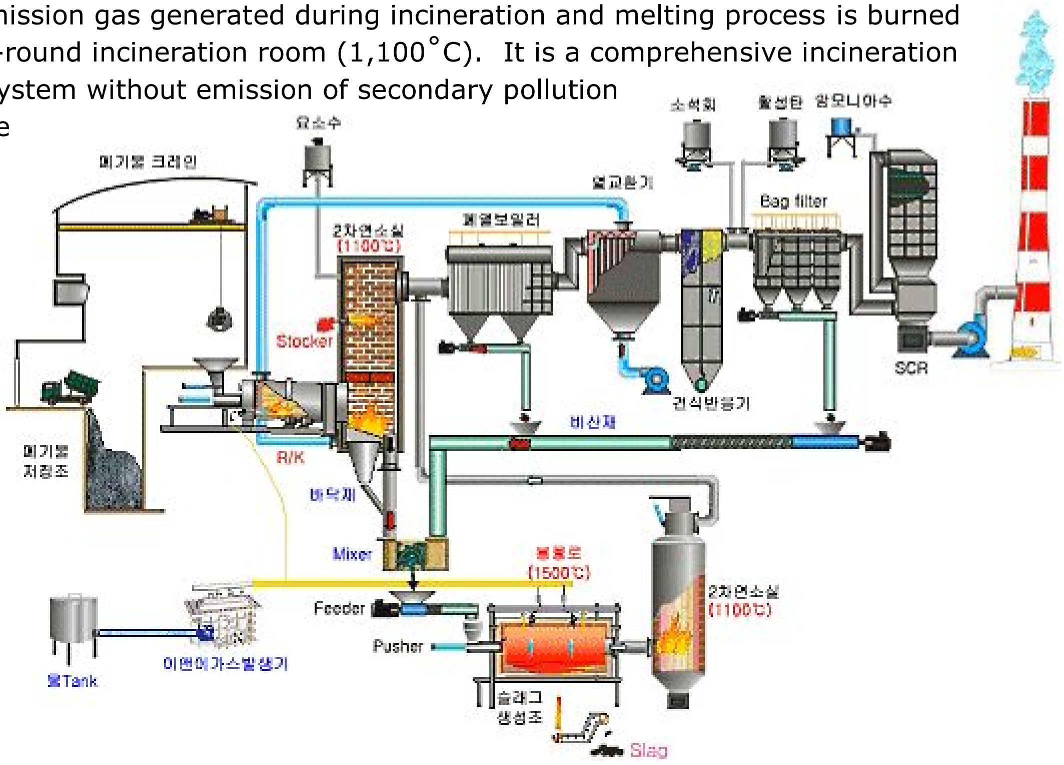

Find out more: http://www.browngas.co.kr/eng/brown-gas-welding.html

Changsha, China: Brown's Gas Medical Incinerator

The Brown's Gas medical incinerator burns medical waste faster and more efficiently.

By adding HHO/Brown's Gas, it burns at 1,900°C – at least 20% hotter when compared to other medical incinerators operating with traditional flammable gas.

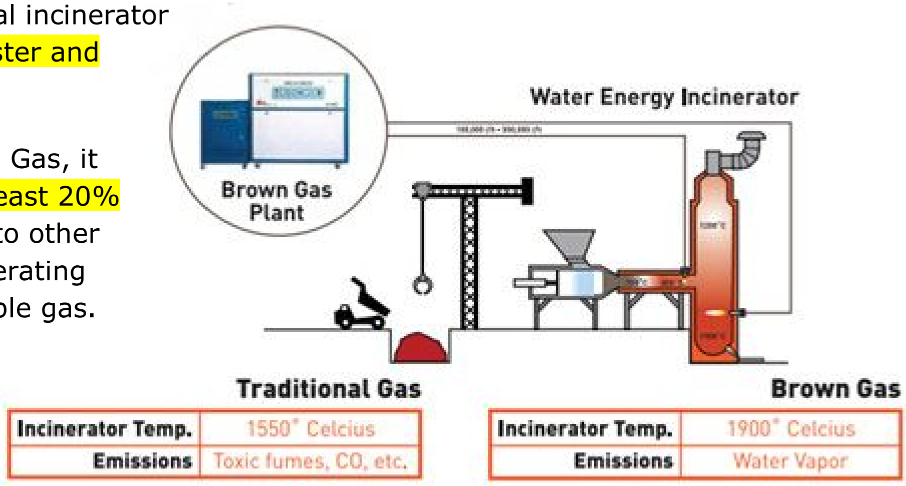

Traditional Gas

Incinerator Temp.	1550° Celcius
Emissions	Toxic fumes, CO, etc.

Brown Gas

Incinerator Temp.	1900° Celcius
Emissions	Water Vapor

Find out more: http://www.okayenergy.com/industry-news/50.html

Chapter 28.
EMERGING: “Cold Fusion” Water-fuel or Water-error?

Note: some of the claims appearing in this chapter have not yet been fully validated

Many readers don’t really know what “Cold Fusion” actually is. Maybe you just recognize it as some lofty idea for energy production. So let’s first define the terminology of this subject. Please make sure to study and understand these definitions before you go any further into this chapter. If you’re not really interested, proceed to the next chapter.

Definitions - Fusion vs. Fission

- ☐ **Fission** is the splitting of a large atom into two or more smaller ones. It’s what they do in nuclear plants/bombs and it does not occur normally in nature.
- ☐ **Fusion** is the fusing of two or more lighter atoms into a larger one. It occurs in nature: the sun, for one example, and I believe also elsewhere in nature.
- ☐ **Main Differences:** Conventional science has it that FUSION must consume enormous energies in order to overcome the electrostatic repulsion of protons. They’ll never allow you to think that FUSION can be done in a small and ill-equipped lab. However, conventional science DOES ADMIT that ***FUSION releases energy 3-4 times greater than the energy released by FISSION***. Imagine a “nuclear plant” working on fusion rather than fission… that is, if only it wouldn’t require such humongous amounts of energy to generate the process. But maybe it doesn’t? Well, that’s the subject of this chapter.

A Quick Overview Shows Wide Disagreement on Naming the Effect (Effects?) Collectively referred to as “Cold Fusion” and its Many Names (like HHO/Brown’s Gas)

“Cold” Fusion by definition is fusion that does not require high temperatures. It should be understood that “Cold Fusion” is a broad term that describes a set of previously unknown nuclear or nuclear/chemical reactions. Additionally, *these reactions are not over-unity. There is a fuel giving away energy. Hydrogen is collapsing to form Helium.* Other terms that have been adopted to describe “Cold Fusion” type reactions, include:

(1) **Fleischmann/Pons Effect** (named after ***Martin Fleischmann*** and ***Stanley Pons*** who in 1989 broke the news to the world that they have created nuclear fusion in a tabletop experiment)

(2) **Low Energy Nuclear Reactions** (LENR)

(3) **LeClair Effect Nuclear Reactions** (also LENR) coined by Mark L. LeClair of https://nanospireinc.com/Fusion.html – as far as I understand, a different type of fusion but a useful LENR just the same (LeClair has commercial products).

(4) **Controlled Electron Capture Reaction** (CECR) by Brillouin Energy Corp. (http://BrillouinEnergy.com)

(5) **Lattice Assisted Nuclear Reactions** (LANR)

(6) Solid State Nuclear Reactions, Lattice Enabled

(7) **Chemically Assisted Nuclear Reactions** (CANR)

(8) **Condensed Matter Nuclear Science** (CMNS)

(9) **Condensed Matter Nuclear State Physics** (CMNS)

(10) Anomalous Heat Effect

(11) Quantum Fusion

(12) LENT (probably 'Low Energy Nuclear Technology' – very rarely used)

Cold fusion apparatus →
at the Space and Naval Warfare Systems Center, San Diego

(13) In an article by Dr. Brian O'Leary and Stephen Kaplan they wrote that **New Hydrogen Energy** was the Japanese name for Cold Fusion.

(14) Mark Gibbs from Forbes® suggested **Anomalous Energy System** (AES)

(15) The editor at *Cold Fusion Times* says LENR is a misnomer and we should define it **Room Temperature High Energy Nuclear Reactions** (I agree!)

(16) NASA called it **The Nuclear Reactor in Your Basement** (nice!)

(17) Prof. Christos Stremmenos (October 2011 in Bologna, Italy, from a YouTube interview): *"Cold Fusion is just an expression, a concept. I prefer to call it a* ***Nuclear Phenomenon at a Solid State."*** He said in Italian: "Fenomeni Nucleari allo Stato Solido" – FNASS? ☺

(18) Count **"Cold Fusion"** as well and we have enough names to start a party.

(19) Furthermore, due to the heavy attack on the subject (it was even announced "dead" by mainstream media – which is a red flag in itself because they obviously do not have enough knowledge to kill ANY branch of ANY emerging, complex and VITAL science), scientists are now struggling to continue and publish "Cold Fusion" papers and Patents under other names… For example, the previously named International Conference on Cold Fusion (ICCF) has changed its name to ***International Conference on Condensed Matter Nuclear Science***, while still carrying the familiar acronym ***ICCF*** (www.ICCF19.com) - Strange but true!

After years of studying the subject I found a video that vividly explains "Cold Fusion" in 4 minutes:

www.youtube.com/watch?v=f6d2q-YxVvk

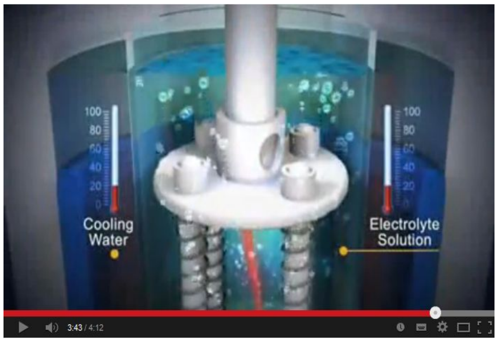

LENR is Not "Cold Fusion" says Steven B. Krivit

A Crucial Distinction

Emergence and Recognition of a New Science

By Steven B. Krivit

Distinction Summary

Nuclear fusion is defined very precisely by its products and emissions, their respective energies and the relationships among the products.

"Cold fusion" discoverers Martin Fleischmann and Stanley Pons never saw the correct signatures of nuclear fusion, and neither has anyone else. There are at least eight significant differences between the signatures of nuclear fusion and those of LENRs.

But the science shows that there are indeed nuclear products and nuclear emissions from these low-energy nuclear reactions, and this is where Fleischmann and Pons were correct. Not only are the products and emissions uncharacteristic of nuclear fusion, but they also cannot possibly be the result of chemistry.

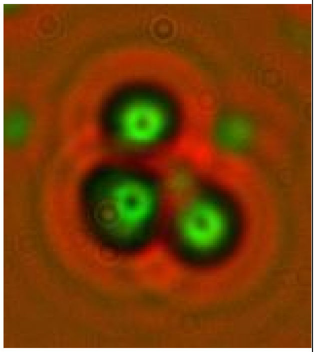

Neutron capture and weak interactions – neither fusion nor fission – easily explain the mysterious reactions and unusual heat generation.

Source: http://newenergytimes.com/v2/reports/LENR-is-Not-Cold-Fusion.shtml

Comment by Ozzie (and one last Cold Fusion name…)

As I read it, Krivit is basically saying: Don't touch the word 'fusion' – it's reserved for "hot" fusion only. However, Krivit agrees that it's indeed a nuclear reaction.

And he's surely right about naming – the name "Cold Fusion" is popular with the public and the media, but, as you will see below, it means different things to different people and after 20 years of research the scientific world has not come to agree on one clear name. In fact, the naming confusion is so great that Mark Gibbs (Forbes) has suggested to name it something like ***"Anomalous Energy System (AES)."***

Not sure if it would catch on, but Gibbs' idea can be said to be "the mother of all the other names", the all inclusive term. And, like I said about Waterfuel in general, this book comes to show you that there is a common goal – but many ways to get there.

COLD FUSION PROOF #1

Latest validations & Important Overviews

"Independent Technical Validation Report Completed on Brillouin Energy's LENR HHT™ Reactor Core Systems"

Author: Brillouin Energy Corp. - http://BrillouinEnergy.com

Published: Press Release 12/1/2015

DOWNLOAD: http://brillouinenergy.com/wp-content/uploads/2015/12/Brillouin-Press-Release-Technical-Validation-Report-12-1-15.pdf

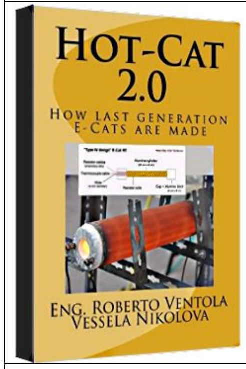

"Hot-Cat 2.0: How last generation E-Cats are made"

Authors: Eng. Roberto Ventola; Vessela Nikolova (Italy)

Published: ISBN #8894003299 (2015)
and ISBN-13 #978-8894003291 (2015)

DOWNLOAD (excerpt):
http://www.ecat-thenewfire.com/Excerpt.pdf

Buy the book from Amazon: http://www.amazon.com/Hot-Cat-2-0-last-generation-Cats/dp/8894003299

"Investigation of the heat generator similar to Rossi reactor"

Author: A.G. Parkhomov (Nuclear Physics, Accelerator Physics and Experimental Physics – Lomonosov Moscow State University, Moscow)

Published: International Journal of Unconventional Science, Vol.7(3), pp. 68-72, 2015

DOWNLOAD: http://www.unconv-science.org/pdf/7/parkhomov-en.pdf

POWER: A Story of Cold Fusion

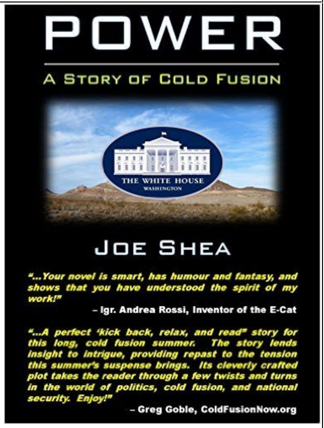

Author: Joe Shea (2014)

Andrea Rossi: *"Joe Shea's novel is smart, has humor and fantasy and shows that he has understood the spirit of my work!"*

ColdFusionNow.org's Greg Goble: *"A perfect 'kick back, relax, and read' story for this long cold fusion summer. The story lends insight to intrigue, providing repast to the tension this summer's suspense brings. Its cleverly crafted plot takes the reader thru a few twists and turns in the world of politics, cold fusion, and national security. Enjoy!"*

Available from Amazon (Kindle version) for $3.49:
www.amazon.com/POWER-Story-Cold-Fusion-Shea-ebook/dp/B00M9UIL8C

COLD FUSION PROOF #2

Tadahiko Mizuno presented before ICCF-18 (International Conference on Cold Fusion), University of Missouri, July 2013

Document Title: "Method of controlling a chemically-induced nuclear reaction in metal nanoparticles"

Contact: Tadahiko Mizuno,
Hydrogen Engineering Application & Development Company
Three System Building 6 floor,
Kita-ku, North 12, West-4, 1-15, Sapporo 001-0012, Japan

Abstract

A nuclear reaction can occur when metal nanoparticles are exposed to hydrogen isotopes in the gas phase. When hydrogen isotopes (light hydrogen and deuterium) enter the nanoparticles and are exposed to electron irradiation, the hydrogen reacts inside the lattice, producing energy.

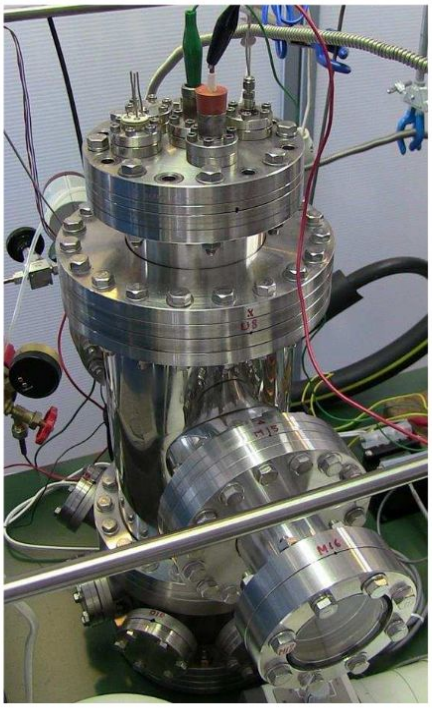

Figure 7. Large reactor vessel.

Figure 8. Large reactor lid and electrodes.

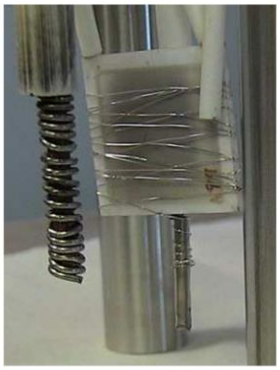

Figure 9. Large reactor electrodes.

The reaction also produces neutrons, gamma rays and transmutations. Normally, electron irradiation does not produce anomalous heat or radiation. A reaction occurs when hydrogen acts as a heavy fermion (a heavy electron) inside metal nanoparticles below a certain particle size, allowing protons or deuterons to approach one another closely.

Usually, with deuterium, to cause a fusion reaction it is necessary to supply energy of 10^7K, or 1 keV per atom. With light hydrogen it is necessary to supply 1.5×10^7K, for a reaction rate of 10^{-31}. With a reactor system on a scale smaller than the sun, a significant fusion reaction does not occur. However, when heavy electrons enter the outer shell of a proton, the radius of the hydrogen atom becomes exponentially smaller with respect to the weight of the heavy electrons, bringing the protons closer together. When this happens, the probability of tunneling fusion increases exponentially.

The nuclear reaction can be controlled with this energy production method of bringing protons and heavy electrons together inside nanoparticles. This brings within reach the goal of developing a practical nanoparticle energy reactor.

Proof of excess heat

(See page 16 of the document)

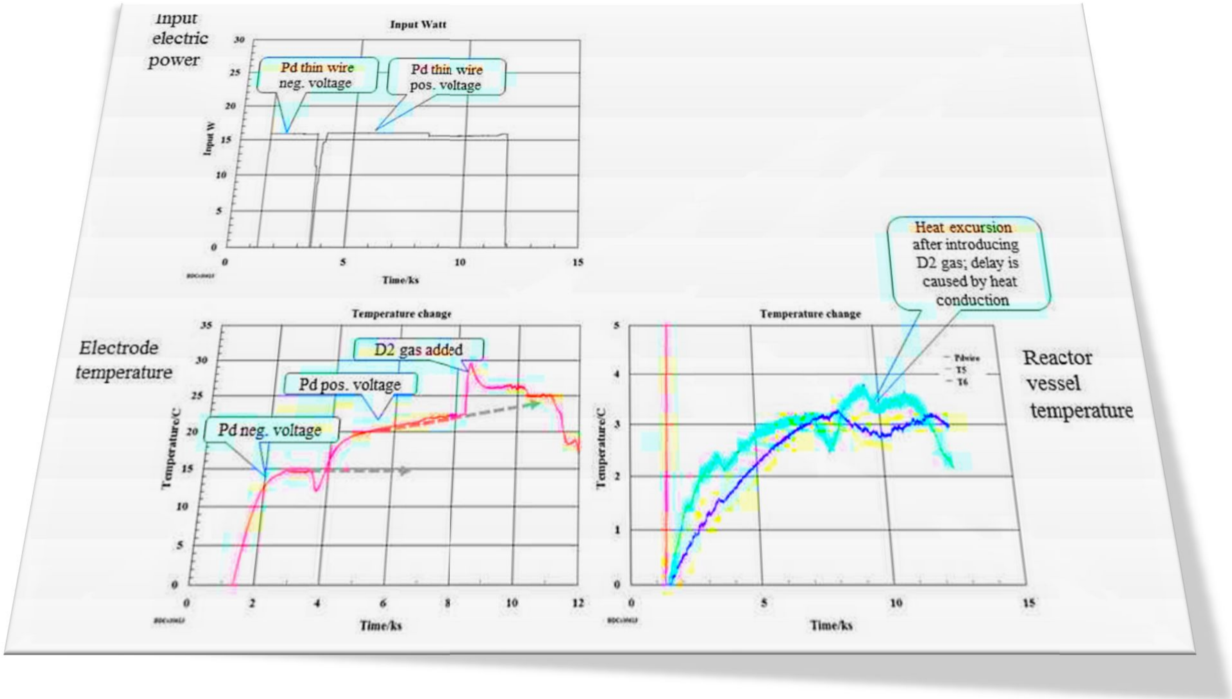

To read the complete document, including new data by Tadahiko Mizuno, download this science paper:
http://lenr-canr.org/acrobat/MizunoTmethodofco.pdf

COLD FUSION PROOF #3

Source: www.LENRproof.com (recently purchased by Swiss/American collaboration www.LENR-invest.com - congrats!)

The Width and Breadth of Cold Fusion Science

As presented by Tyler van Houwelingen →

Houwelingen's scientific and engineering background:

Tyler is the founder, Chairman and former CEO of AzulStar, Inc. (a privately held provider of 4G/5G wireless broadband Internet and communications services to commercial, government and multi-tenant unit customers) and the creator of www.LENRweb.com

Tyler is a pioneer and regular speaker on high technology with a focus on wireless broadband technology *and LENR/Cold Fusion*. Prior to founding AzulStar, Tyler was a senior technology consultant with McKinsey and Company in Madrid, Spain. He also served as an applications and technical sales engineer with Intel Corporation in Santa Clara, California. Tyler obtained a BS in Electrical Engineering from the University of Michigan and an international MBA from the IESE graduate school of management in Barcelona, Spain.

The essence of his LENR presentation is given below, with his latest updates and evaluations as of the time of publishing this book (keep in mind – this field of technology keeps evolving and expanding) with currently known links/downloads. Originally presented to ICCF-17 – the 17th International Conference on Cold Fusion, held in August 2012 in Daejeon, South Korea. Access the full presentation at www.LENRproof.com

A French version is available at http://fr.slideshare.net/tylervan/lenr-slide-franais (note: at this time of writing it has the December 2012 version).

Mr. Houwelingen and the Author of this book would like to thank the inputs of persons and scientists who have contributed to this exciting field and the content within this presentation. If you believe any of the content contains errors or mis-representations of the facts, please send feedback (Houwelingen's email is: tvh@lenr-invest.com). You may reprint any content within this presentation if you include a link back to LENRproof.com

Is LENR (Low Energy Nuclear Reaction) the Real Deal?

10kW Home E-CAT

1MW Industrial E-CAT

NOTE: E-Cat is a development in progress, by Andrea Rossi's Leonardo Corporation. It is brought here as a very prominent development but it's definitely not the only commercial development as you will see here. (~Ozzie)

There are 3 facts you must analyze in order to believe that Low Energy Nuclear Reaction (a.k.a. LENR) is a game changer in energy:

Fact 1. Is LENR a real, proven net-energy generating reaction?

Fact 2. Has LENR been scaled and controlled to commercial power generating levels?

Fact 3. Is scaled/controlled LENR superior to all existing energy sources?

This presentation attempts to answer these questions one by one…

What is LENR?

- Low Energy Nuclear Reaction (LENR) is a new, 3rd type of nuclear reaction (along with fission and fusion) that was originally discovered by scientists Fleischmann and Pons in 1989.

- LENR appears to safely generate low cost energy on demand using non-nuclear fuel and producing no harmful byproducts (CO_2, radiation, etc.).

- According to NASA, ***LENR has up to 8,000,000 times the energy density of today's combustion energy processes***, which is greater than Fusion or Fission. Reference: "The Application of LENR to Synergistic Mission Capabilities" - by Douglas P. Wells (NASA Langley Research Center) and Dimitri N. Mavris (Georgia Institute of Technology), published by the American Institute of Aeronautics and Astronautics (AIAA) http://ntrs.nasa.gov/archive/nasa/casi.ntrs.nasa.gov/20150000549.pdf

- LENR operates at lower temperatures than traditional nuclear energy (150-1500°C).

- The LENR process leverages the Weak nuclear force and the process can now be fully explained using the standard Model of Physics.

- Modern LENR systems use nickel nano-powders, hydrogen gas and small amounts of the other non-nuclear materials as fuel and may be approaching commercial power generating levels.

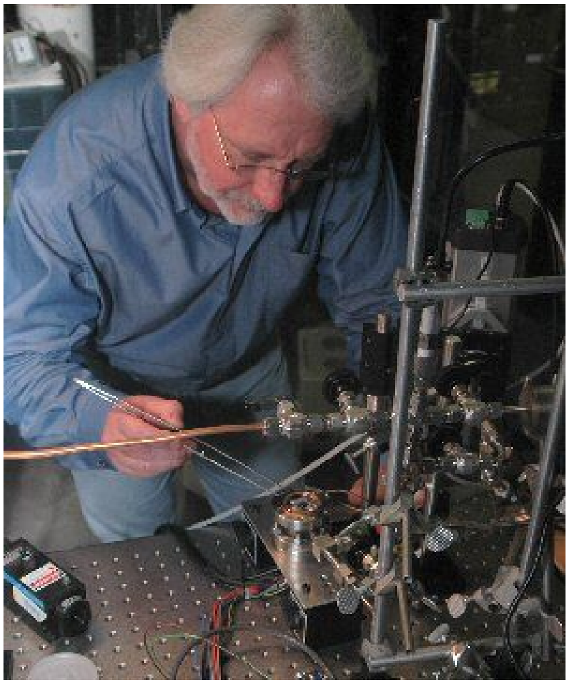

← Michael McKubre working on deuterium gas-based cold fusion cell used by SRI[170] International.

Photo by Steven B. Krivit. Shot at SRI International in Menlo Park, CA on Feb. 1, 2007

[Added by Ozzie]

---

[170] SRI International (formerly Stanford Research Institute) www.sri.com

1. LENR is a real, proven energy creating reaction

FACT 1 EVIDENCE

LENR is a Real Energy Creating Mechanism

- Long and rapidly growing list of credible people and organizations worldwide affirming LENR is real, with strong affirmation recently from NASA, US Navy, US Department of Defense, National Instruments, European Directorate-General as well as leading scientists and professors at respected universities worldwide.

- Some ***1700 peer-reviewed LENR articles and hundreds of reported replications*** of LENR worldwide since the discovery in 1989.

- Ongoing and recently completed LENR public demos at MIT, NIWeek (Austin, Texas), ICCF-17 (Korea) and multiple demos in Italy.

Growing list of credible people and organizations worldwide affirming with firsthand knowledge that LENR is real and produces a net energy gain

1) Brian Josephson, Nobel Prize Theoretical Physics, **Cambridge**, UK
2) Julian Schwinger, Nobel Prize Physics, **Berkeley**, Purdue, deceased
3) Dennis Bushnell, **NASA** chief scientist, Langley Research Center (LRC)
4) Dr. Joseph Zawodny, **NASA** senior research scientist Langley Research Center
5) Dr. Michael A. Nelson, **NASA** LENR Space Applications Lead
6) David Wells, **NASA** LRC, Aeronautical engineer
7) Gustave C. Fralick, Arthur J. Decker and James W. Blue – **NASA** Lewis Research
8) George Miley, University of Illinois, Department of Nuclear, Plasma and Radiological Engineering

9) Dr. Mike McKubre, **SRI**, Director Energy Research Center, University of Missouri

10) Dr. Francis Tanzella, **SRI**, PhD chemistry, senior electrochemist

11) Dr. Brian Ahern, Ames National Laboratory

12) Prof. Peter Hagelstein, Electrical Engineering, **MIT**

13) Dr. James Truchard, **National Instruments Founder,** President and CEO

14) Edmund Storms, **Los Alamos** National Laboratory

15) Dr. Mace, **Los Alamos** National Laboratory

16) John Bockrus, electrochemist Texas A&M University

17) Dr. Francesco Piantelli, University of Siena (Italy), considered the father of modern LENR, filed **original patents in 1995** for **Ni/H**[171] based LENR

18) Dr. Sergio Focardi, emeritus professor University of Bologna, Italy, deceased

19) Dr. Giuseppe Levi , University of Bologna, Italy

20) Dr. David Bianchini, University of Bologna, Italy

21) Dr. Christos Stremmenos, Chemical Engineer, Professor (retired) in the University of Bologna, Dept of Physical and Inorganic Chemistry, ex Ambassador of Greece in Italy

22) Francesco Celani, **National Institute of Nuclear Physics** (Italy's equivalent of Los Alamos)

23) Dr. Frank Gordon, **US Navy**'s Space and Naval warfare systems (SPAWAR), retired

24) Eugene Mallove, Professor of science – **MIT**, deceased

25) Dr. Mastromatteo, STMicroelectronics[172]

26) Dr. Sven Kullander, chairman of the **Royal Swedish Academy of Sciences'** Energy Committee, Professor emeritus High Energy Physics Uppsala University (Sweden)

27) Rob Duncan, University of Missouri, Chancellor of research

28) John Gahl, University of Missouri, Director Material Science Engineering

29) Mark Prelas, University of Missouri, professor Nuclear Science

30) Dr. Yeong E. Kim, professor physics Purdue University

31) Professor Koltick, Purdue University

32) Professor Reifenberger, Purdue University

---

[171] Reaction between Nickel and Hydrogen (in the water) under special conditions

[172] Leading manufacturer of semiconductors

33) Richard Oriani, Professor Emeritus, University of Minnesota

34) Tyler van Houwelingen, BSEE University of Michigan, MBA IESE

35) Hanno Essén, theoretical physicist **Swedish Royal Institute of Technology**, former chairman Swedish Skeptics Society

36) David J. Nagel, Professor of Engineering & Applied science **George Washington University**

37) Dr. Andres, **Purdue University**

38) Dr. L. Magro, Institute for Protection and Environmental Research (ISPRA)

39) **Martin Fleischmann**, deceased, and ***Stanley Pons***, University of Utah & Southampton, considered the fathers of LENR/Cold Fusion

40) Akito Takahashi, Osaka University, retired professor

41) Professor Yoshiaki Arata, **Osaka University**, Japan

42) Physicist Yasuhiro Iwamura, **Mitsubishi Heavy Industries**

43) **State Senator**, Bruce Tarr, Massachusetts

44) Allan Widom, Prof. Northeastern University

45) Lewis Larson, CEO Lattice Energy, LLC

46) **Pirelli** High School, Italy

47) **US Dept of Defense** Advanced Research Agency (DARPA)

48) Professor Vittorio Violante, **ENEA** (Italian Agency for Energy and Economic Development, formerly CNEN)

49) Dr. Vladimir Vysotskii, Kiev National University, Head of physics department

50) Dr. Iraj Parchamazad, Chairman of the Chemistry University of LaVerne

51) Dr. T.W. Grimshaw, Energy Institute, University of Texas

52) Professor Michael Melich, **US Navy**

53) Sidney Kimmel, billionaire philanthropist donated $5.5m to University of Missouri to study LENR in February 2012.

Many credible government organizations, universities and multi-billion dollar firms are known to be currently investing into and/or researching LENR, including:

NASA has shown strong, growing support for LENR

- NASA filed two LENR related patents in fall 2011. (*US Patent # 2011/0255645*.)
- On 9/22/11, NASA-GRC[173] held an LENR workshop with NASA LENR researchers presenting:
  - Dr. Michael A. Nelson, NASA-MSFC[174] LENR Space Applications Lead, *Overview of Low Energy Nuclear Reactions as Implemented by Andrea Rossi and Francesco Piantelli.*

    http://newenergytimes.com/v2/government/NASA/20110922NASA-Nelson-GRC-LENR-Workshop.pdf
  - Gustave C. Fralick, John D. Wrbanek, Susan Y. Wrbanek, Janis Niedra from NASA LENR at GRC.
  - Dennis M. Bushnell Chief Scientist NASA Langley Research Center, "*NASA and LENR Presentation.*"
- Multiple persons within NASA are affirming LENR is real in 2011/2012.

---

[173] Glenn Research Center

[174] Marshall Space Flight Center

  - Dennis Bushnell, chief scientist at NASA LRC, 5/23/12. **"We now have over two decades of hundreds of experiments worldwide indicating heat and transmutations with minimal radiation and low energy input… So, is LENR "Real?" Evidently, from the now long standing and diverse experimental evidence…** There are estimates using just the performance of some of the devices under study that **1% of the nickel mined on the planet each year could produce the world's energy requirements at the order of 25% the cost of coal."** *http://futureinnovation.larc.nasa.gov/view/articles/futurism/bushnell/low-energy-nuclear-reactions.html*

  - Joseph M. Zawadny *Low Energy Nuclear Reactions Is there a better way to do nuclear power?* http://newenergytimes.com/v2/government/NASA/20110922NASA-Zawodny-GRC-LENR-Workshop.pdf

- During 2011/12, NASA hired Boeing to develop an advanced, green subsonic airplane using LENR and 3 other clean energy technologies. Boeing provided the plans to NASA in May 2012: *http://newenergytimes.com/v2/news/2012/20120500NASA-CR-2012-217556-Subsonic-Ultra-Green.pdf*

- In May 2012 NASA posted LENR support on its website and revealed that they have been using public funds to study LENR for the past 3 years: *http://futureinnovation.larc.nasa.gov/view/articles/futurism/bushnell/low-energy-nuclear-reactions.html*

- In January 2013, The NASA Aeronautics Research Institute (NARI) awarded a grant to Doug Wells of NASA Langley Research Center for a concept project titled *Low Energy Nuclear Reaction (LENR) Aircraft*. The discipline area is Propulsion/Airframe integration: *http://nari.arc.nasa.gov/2013*

- In February 2013, NASA posted another LENR support, "The Nuclear reactor in your Basement" - *http://climate.nasa.gov/news/864*

- In Feb, 2014, NASA posted this presentation "Low Energy Nuclear Reaction Aircraft", which indicates that among others, Boeing and Lockheed Martin are working on/showing an interest in LENR. *http://nari.arc.nasa.gov/node/259*

US NAVY/SPAWAR has been one of the leaders in LENR research. SPAWAR has validated LENR in public statements and declassified documents

On April 17, 2013 the US Navy filed for an LENR patent.
http://www.freepatentsonline.com/8419919.html

US Navy's SPAWAR division has published some 30 peer-reviewed papers on LENR.
http://newenergytimes.com/v2/reports/SSC-SD-Refereed-Journal-Articles.shtml

SPAWAR acknowledged researching LENR for the past twenty years and confirmed that LENR is real:

- A recently declassified November 2009 SPAWAR/NAVY report, *"Thermal and nuclear aspects of the* **Pd/D_2O**[175] *system: A decade of research at Navy Laboratories"* http://newenergytimes.com/v2/library/2002/2002SzpakS-DecadeOfResearchAtNavyLaboratoriesVol1.pdf

  "…We do know the existence of Cold Fusion phenomenon through repeated observations by scientists throughout the world…
  It is time for government funding organizations to invest in this research."
  ~Dr. Frank E. Gordon, Head Navigation/Applied Sciences SPAWAR, San Diego (Stanislaw Szpak, Pam Mosier–Boss and Dr. M. Ashraf Imam of SPAWAR contributed/edited)

- Watch the SPAWAR presentation at University of Missouri in May 2009, titled "Twenty Year History of LENR – Hiding in Plain Sight":
  www.youtube.com/watch?v=VymhJCcNBBc

One of Leonardo Corporation's listed advisors/BOD[176] is Professor Michael Melich, who is currently a faculty member of the US Navy Post Graduate School.

Paul Swanson of the US Navy's SPAWAR attended Leonardo Corporation's demo in fall 2011; Note that Paul was acting on his own accord and was not representing the US NAVY directly.

---

[175] Palladium electrode in "heavy water" or "heavy hydrogen" (deuterium oxide D_2O)

[176] Board of Directors

European Commission Directorate-General For Research & Innovation provided strong confirmation of LENR

"THE EXISTENCE OF THE EFFECT IS NO LONGER IN DOUBT... [LENR] HAS UNLIMITED & SUSTAINABLE FUTURE ENERGY TECHNOLOGY POTENTIAL." July 2012

In a report titled "Low energy reactions in condensed matter" - **July 2012:**

> *"ENEA, SRI and NRL[177] have been involved within review programs in the US and in Italy. The main task was to demonstrate... the existence of the* ***excess heat production****. The target was achieved and* ***the existence of the effect is no longer in doubt."***

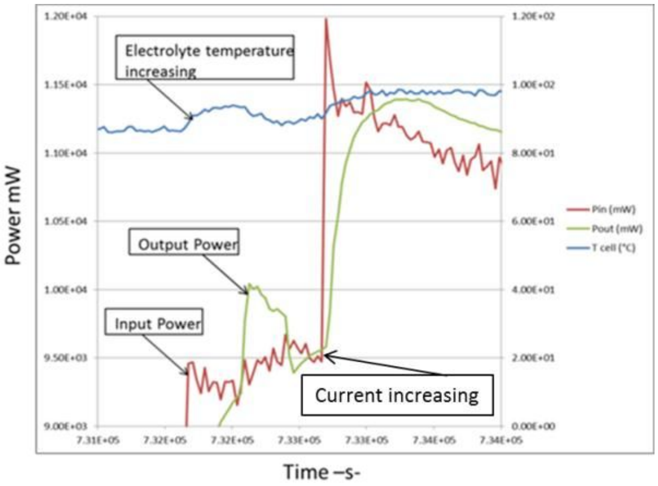

← *Fig.3.4.1 500 mW excess of power given by a designed material*

Published: 2012 in Luxembourg
by the ***Publications Office of the European Union***

ISBN: 978-9279-25090-3

Doi: 10.2777/27654

See pages: 23-26

Download:
http://ec.europa.eu/research/industrial_technologies/pdf/emerging-materials-report_en.pdf

Recommendations to the Commission

> ***"Include LENR in FP7[178] calls as research on materials as it has unlimited and sustainable future energy technology potential."***
>
> ***"Support the study... to achieve the control of the technology."***
>
> ***"Focus on the fundamental research because of the synergy with other disciplines."***

---

[177] US Naval Research Laboratory www.nrl.navy.mil

[178] Framework Programme 7 – the Seventh Framework Programme of the European Union for the funding of research and technological development in Europe.

Other Compelling Support for LENR

"No doubt anomalous excess heat is produced in these experiments"

~DARPA, 2009 reported on **60 Minutes**, ***"Cold Fusion is Hot Again"***

"An independent research thesis at the University of Texas at Austin found that from 1989 to 2010 ***more than 180 experiments around the world*** reported anomalous high production of excess heat in Pd/D or Ni/H."

~National Instruments, July 2012

"Very careful work at two national laboratories, namely the Naval Research Laboratory in the United States, and at ENEA, the National Energy Laboratory of Italy, and at many other laboratories around the world, clearly indicate that these extreme 'excess' heat releases are in fact real, despite earlier claims to the contrary."

~Robert Duncan, Vice-Chancellor for Research, University of Missouri, 2012

"I believe in analysis of new sources of energy. I believe in laboratories, looking at ways to conduct electricity with cold fusion."

~Mitt Romney, December 2011, Washington Examiner.
www.youtube.com/watch?v=xABnbUMK6Ew

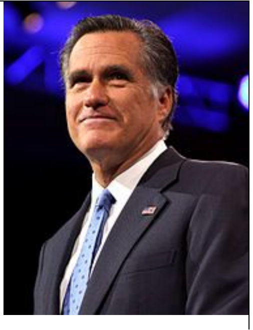

Photo: Gage Skidmore

More support

Science paper: "Judging the Validity of the Fleischmann-Pons Effect"

Authors: E. K. Storms (LANL (ret.), KivaLabs, Santa Fe, New Mexico, USA) and T. W. Grimshaw (Lyndon B. Johnson School of Public Affairs, The University of Texas, Austin, Texas, USA). Download:

http://fusiontorch.com/uploads/StormsJudgingValidityOfFleischmannPonsEffect2009.pdf

Some 1700 Peer-Reviewed LENR Articles & 1000's of Reported Replications of LENR Worldwide Since The Discovery in 1989

Visit **www.LENR-CANR.org** – Thanks to Jed Rothwell of Chamblee, Georgia (USA) for this excellent library of books and science papers about Cold Fusion. (~Ozzie)

Professor Celani's portable LENR demo – August 2012: 12-22 Watt output power gain continuously for 4 days

Performed on two continents back to back; measurements performed by National Instruments

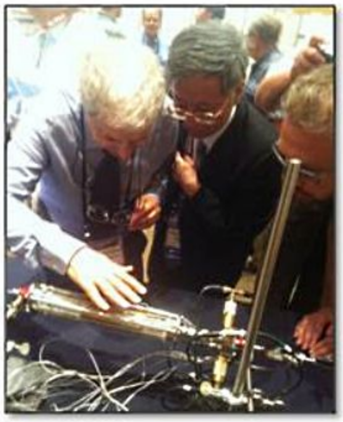

Prof Celani portable Ni/H LENR live demo

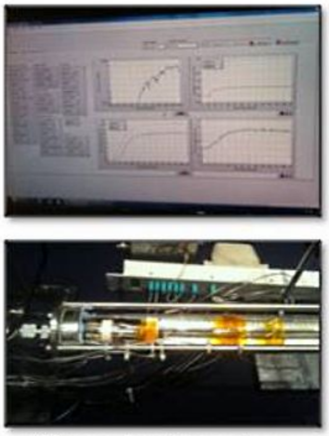

- *NI monitoring systems*
- *Live LENR Reactor close up*

Prof Celani with NI engineer demonstrating output gains.

In August 2012, Prof. Celani*, along with National Instruments engineers, successfully demoed an Ni/H LENR reactor at ICCF. The demo was placed in the middle of *South Korea High Tech Center* and was open to public view. It was run from Tuesday morning Aug.14 and was still running when I left late Friday Aug.17 producing a steady 15-20W of excess power.

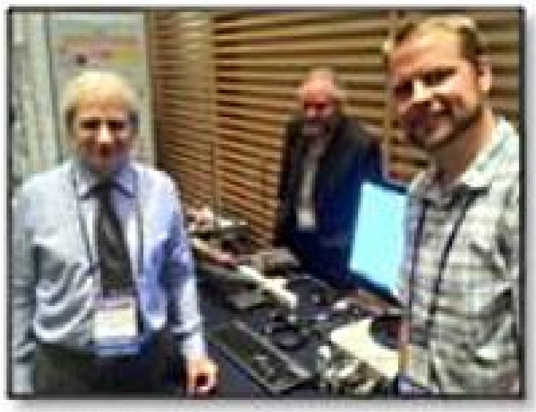

Prof. Celani and Tyler van Houwelingen in front of live LENR demo→

* *Italian scientist Francesco Celani has built a cold fusion cell that he has shown publicly at scientific events on several occasions. It appears to illustrate about 2.8 times more heat out than it takes to run it.*

All monitoring/measurements were performed by a National Instruments (NI) onsite engineer, who supplied all measuring equipment. The demo was also run successfully a week earlier at NIWeek in Austin, Texas in front of 2000 NI engineers with measurements performed by three NI-provided engineers. The Celani reactor was recently verified by STMicroelectronics (*http://www.e-catworld.com/2012/12/celani-announces-3rd-party-replication/*) and is considered to be one of the best, simplest, and most conclusive demos of LENR to date. The non-profit group Martin Fleischmann Memorial Project is working with Professor Celani to openly demonstrate and distribute the demos worldwide, see *www.quantumheat.org* *VIDEO:* https://youtu.be/HN4VK82Mngc

Recent Public Demonstrations of LENR Reactors

MIT's NANOR[179] LENR reactor (links below). Mitchell Schwartz of JET Energy operated the demo, supervised by Dr. Peter Hagelstein, professor at MIT. Demo visited by US State Senator Bruce Tarr & others. Claimed mW power output, COP[180] 10-14.

Photo: Barry Simon, May 2012

References:

http://coldfusionnow.org/jet-energy-nanor-device-at-mit-continuing-to-operate-months-later/

http://coldfusionnow.org/wp-content/uploads/2012/05/HagelsteinPdemonstra.pdf

http://coldfusionnow.org/conclusively-demonstrating-the-new-energy-effect-of-cold-fusion/

Celani's Ni/H LENR reactors. All control and measuring equipment provided by National Instruments. 10-22 Watt excess heat for 75+ hours, max. temperature 160ºC.
Photos: Dennis Letts, Frank Acland (to the best of my knowledge.~Ozzie)

Ref.: http://blog.newenergytimes.com/2012/08/07/lenr-gets-major-boost-from-national-instruments/

A detailed report of Celani's reactor and excess heat measurements can be downloaded from: http://www.22passi.it/downloads/PresICCF17_NewA3A.pdf

"Athanor" and "Hydrotron" LENR Reactors as reported by Daniele Passerini www.22passi.it

---

[179] NANOR™ – a small LENR device by Nanortech, Inc. (formerly JET Energy) developed by MIT Professor Peter Hagelstein and Dr. Mitchell Swartz.

[180] Coefficient of Performance: the ratio of work or useful output to the amount of work or energy input. In this case, more than 10 times the energy gained than lost/invested.

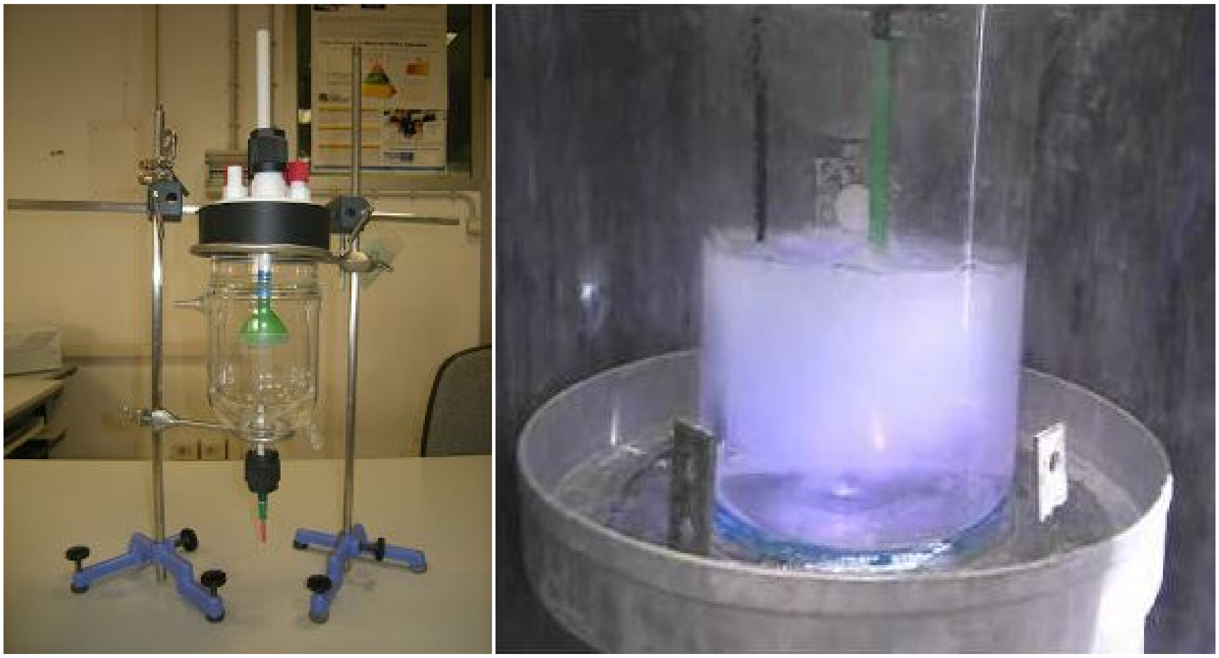

Photos: Ugo Abundo, June-August 2012

- Download: http://www.22passi.it/downloads/PresICCF17_NewA3A.pdf
- Video: www.youtube.com/watch?v=R0pkWeA2VKU
- Test and all setup detail to be released shortly.

Photo: Giuseppe Levi

Rossi with Sergio Focardi (photo: Frederico Borella)

- Leonardo Corporation claimed 1MW Industrial E-CAT.
- Claimed to be the world's first commercial LENR device
- Claimed up to 500kW (thermal)
- Demonstrated to a large group for 3 hours.

www.renewableenergyworld.com/rea/blog/post/2011/10/clean-cheap-nuclear-power-update

FACT 2 EVIDENCE

LENR Has Been Scaled and Controlled to Commercial Power Generating Levels

A. LENR has been maturing and scaling up in net energy creation and duration since 1989. This has accelerated with the introduction of Ni/H systems where power levels may have now reached commercial power generation levels; this is referred to as ***LENR+***

- ✓ 1989 Initially claiming 0.01-1W net power gain by Fleischmann/Pons (Pd/D)
- ✓ 1993 Piantelli claiming 1-5W (Ni/H)
- ✓ 2012 Celani claiming 10W power gain (Ni/H)
- ✓ 2015 Other firms claiming >10kW including Brillouin, Lenuco and Leonardo Corporation

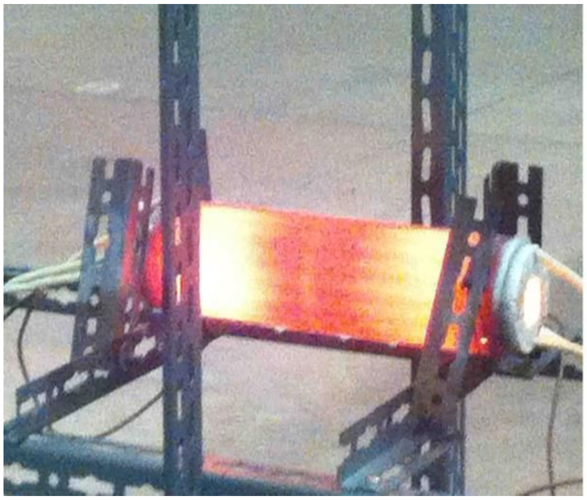

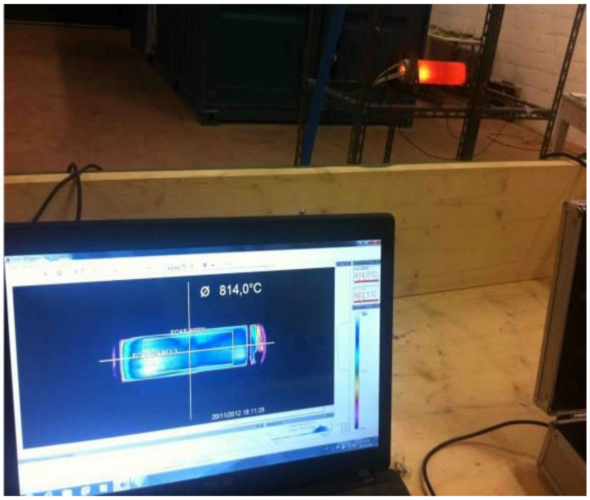

B. There are over a dozen companies that have been formed in the past couple years with the intent to commercialize LENR. Multiple groups are claiming the ability to scale and control the reaction to at least 10W; most of these claims have not yet been validated.

C. There is growing circumstantial evidence and an increasing number of credible persons affirming that higher power LENR may have been achieved or will be achieved in the near term.

Sustained power gain has been scaling since 1989 and kW LENR power levels appear to be imminent in the near term

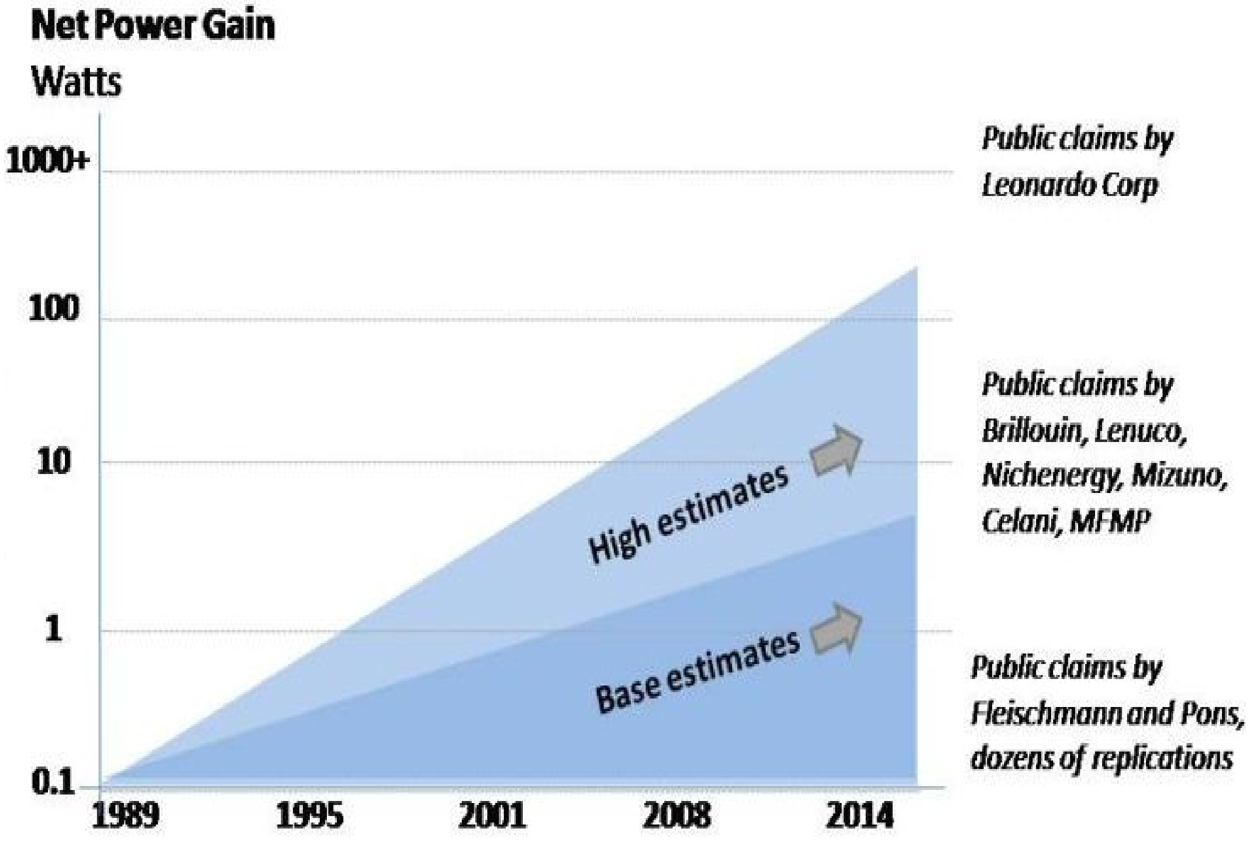

- LENR has been increasing in power and kW may be imminent in the near term (0-5 yr).
- Both Pd/D and Ni/H paths are valuable for further R&D; both may quickly increase in power once LENR is well understood.

The leading theories explaining LENR fit within the standard model of physics

Candidate Theories for LENR

(1) ***Bose-Einstein*** Condensation Nuclear Fusion (BECNF) Theory (using ELTB[181] Method)

(2) ***Widom-Larsen*** Theory

Most promising theories

(3) ***Hagelstein*** Theory

(4) Bazhutov-Vereshkov Theory

(5) Chubb (Scott) Theory

(6) Chubb (Talbot) Theory

(7) Fisher Theory

(8) Gareev Theory

(9) Hora-Miley Theory

(10) Grand Unification Theory of CF

(11) Kim-Zubarev Theory

(12) Kirkinskii-Novikov Theory

(13) Kozima Theory

(14) Li Theory

(15) Preparata Theory

(16) Sinha-Meulenberg Theory

(17) Storms Theory

(18) Szpak Theory

(19) Takahashi Theory

There are several candidate theories for why LENR works as it does, but no clear consensus winner yet. The best supported theories are fully compatible with the Standard Model:

(1) National Instruments is reportedly supporting the ***Bose-Einstein*** Condensation Nuclear Fusion Theory (BECNF, ELTB Method) which suppresses the Coulomb barrier for fusion.

(2) NASA has put its initial support behind ***Widom-Larsen*** or a derivation of it, which involves the weak nuclear force and Beta Decay and not fusion for LENR power generation. LINK: http://theenergycollective.com/cleantech-blog-neal-dikeman-and-richard-stuebi-et-al/112566/weak-force-key-lenr

(3) Others support the theory by ***Peter Hagelstein*** of MIT.

Not having a clearly accepted theory and understanding of the LENR process has likely delayed the ability to better control and scale the reaction. It has also limited more widespread scientific acceptance.

[Source: © New Energy Times: http://newenergytimes.com/v2/sr/Theories/TheoryIndex.shtml]

---

[181] Equivalent Linear Two-Body www.physics.purdue.edu/people/faculty/yekim/8_Equivalent_Linear_two_body.pdf

There are over a dozen companies that have been formed recently to commercialize higher power LENR; there are credible people associated with most/all of these firms

Brillouin Energy – Robert Godes, Berkley, California. Brillouin is also a leader with kW claimed today with their "Brillouin Boiler" LENR reactor. Brillouin is working closely with SRI (McKubre).

In June 2012 received $2M seed money; in Sept 2012, Brillouin received a patent for their technology In China. In Sept 2012, it was reported that Brillouin secured a "second stage" $20M conditional investment from Sunrise Securities of New York, NY (sunrisecorp.com); the condition being the successful retrofit an existing fossil fuel plant (5-10MW). www.brillouinenergy.com

NicHenergy – Dr. Piantelli, Italy, claimed 10-100W (2012), and kW targeted 2013 (licensing only) www.nichenergy.com

NOTE: according to http://www.nichenergy.com/about-us.html#History, back in August 1989 Prof. Piantelli at Physics Dep. of University of Siena, Tuscany, Italy, discovered the anomalous heat effect in Nickel-Hydrogen systems. (~Ozzie)

Lenuco – Professor Emeritus George Miley, University of Illinois (USA) claimed 100-300W today, commercial 3kW (home) and 30kW (industrial) targeted for 2017.

http://www.techconnectworld.com/World2012/a.html?i=40168

LENR-CARS – IP and applications of LENR energy to transportation vertical market. www.lenr-cars.com

Clean Planet Inc. (Tokyo, Japan) – Professor Mizuno led Japanese commercial venture focused on R&D of plasma LENR.

http://cleanplanet.co.jp/index.php?lang=en

http://coldfusionnow.org/yasuhiro-iwamura-to-focus-on-nuclear-waste-clean-up/

http://cleanplanet.co.jp/news/en/15.03.30%20Clean%20Planet%20-%20Press%20release.pdf

Jet Energy Inc. – Dr. (scientific and medical) Mitchell Swartz, Wellesley Hills, Massachusetts (USA), mW range targeting miniature applications with LENR based NANOR. US Patents D596724, D413659, other Patents pending.

- http://world.std.com/~mica/jet.html
- http://world.std.com/~mica/nanortechnology.htm http://jet.xvm.mit.edu/

Leonardo Corporation – Andrea Rossi, Miami (Florida, USA) and Bologna, Italy. Leonardo Corp has made claims about its E-Cat LENR+ device; however, these claims have not yet been validated beyond doubt by 3rd parties. Claims include 1MW industrial E-Cat in commercial testing at a customer with a COP of >6, temps stable to 1200°C with the new Hot E-Cat, which Rossi claims produced 3268 kWh over 218 hrs with COP >10 and an energy density >163 MW/kg. These claims have been supported by one independent tester (details below). In September 2012 Rossi received a Safety Inspection Certificate from SGS, a prominent testing agency. On May 20, 2013 a 3rd party testing was published supporting Rossi's claims. www.ecat.com

In 2016, Leonardo Corp announced it has completed a 350-day test of the E-Cat powering plant in Miami, validated by Dr. Ing. Fabio Penon, a Ph.D. in Nuclear Engineering: http://www.prnewswire.com/news-releases/ (these claims are being made amid a legal dispute with another company over the E-Cat claims).

Lattice Energy, LLC – Widom/Larson, Illinois (USA). www.lattice-energy.blogspot.com

Nucat Energy, LLC – Dr. David J. Nagel – LENR Consulting.

www.nucat-energy.com

Kresenn Ltd. – advisors to Dr. Francesco Celani, Italy, 2012 for the development and commerce of LENR applications. www.kresenn.com (HQ in Maidenhead, Berkshire, UK)

Recently teamed up with LENR-Cities (HQ in San Francisco) http://lenr-cities.com/ to build and manage a business ecosystem to fund and develop LENR technologies and applications.

BlackLight Power, New Jersey, potentially similar to LENR[182], recent successful tests:

- http://brilliantlightpower.com/publications/
- http://brilliantlightpower.com/news/

For complete data visit: www.blacklightpower.com

Energetics Technologies, LLC – Israel/University of Missouri (HQ in Santa Barbara, CA, USA), Energetics LENR research has been rolled into the Sidney Kimmel Institute for Nuclear Renaissance, mW range LENR, focus on research. www.energeticstech.com

---

[182] Blacklight's technology is described in Chapter 29. At the time of writing the company expects commercial units to cost around $100 per kilowatt capacity. The units will use water as hydrogen fuel, resulting in an on-site, total generation cost of electricity of less than a cent per kilowatt-hour. (~Ozzie)

Claimed Higher Power LENR Reactors

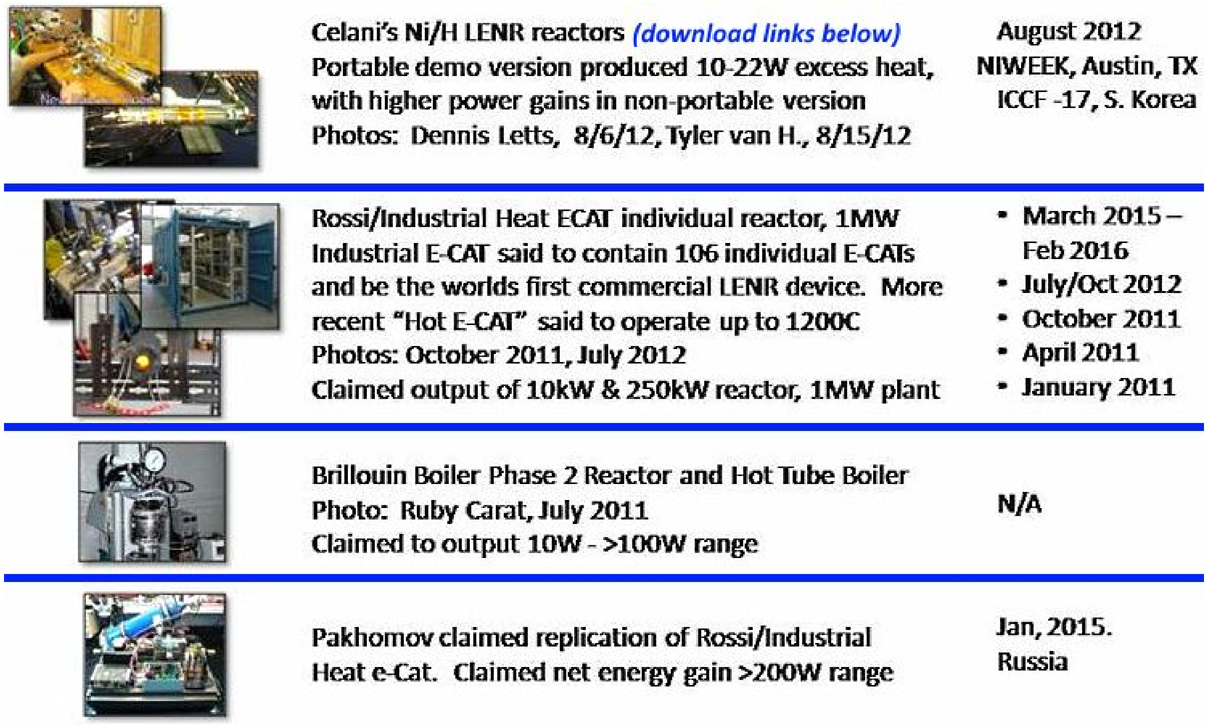

	Celani's Ni/H LENR reactors *(download links below)* Portable demo version produced 10-22W excess heat, with higher power gains in non-portable version Photos: Dennis Letts, 8/6/12, Tyler van H., 8/15/12	August 2012 NIWEEK, Austin, TX ICCF -17, S. Korea
	Rossi/Industrial Heat ECAT individual reactor, 1MW Industrial E-CAT said to contain 106 individual E-CATs and be the worlds first commercial LENR device. More recent "Hot E-CAT" said to operate up to 1200C Photos: October 2011, July 2012 Claimed output of 10kW & 250kW reactor, 1MW plant	• March 2015 – Feb 2016 • July/Oct 2012 • October 2011 • April 2011 • January 2011
	Brillouin Boiler Phase 2 Reactor and Hot Tube Boiler Photo: Ruby Carat, July 2011 Claimed to output 10W - >100W range	N/A
	Pakhomov claimed replication of Rossi/Industrial Heat e-Cat. Claimed net energy gain >200W range	Jan, 2015. Russia

Photos: Dennis Letts, Tyler van Houwelingen

1. "LENR Gets Boost From National Instruments" http://news.newenergytimes.net/2012/08/07/lenr-gets-boost-from-national-instruments/

2. http://www.22passi.it/downloads/PresICCF17_NewA3A.pdf by National Institute of Nuclear Physics, Frascati National Laboratories, Italy, and ISCMNS, Ferentino, Italy.

3RD-Party 2014 "Lugano Report" Indicates Density from LENR Similar to Nuclear Fission Energy

The long-anticipated third party independent report on the E-Cat has been provided and Andrea Rossi has confirmed its uncut authenticity:

http://www.sifferkoll.se/sifferkoll/wp-content/uploads/2014/10/LuganoReportSubmit.pdf

> ***"In summary, the performance of the E-Cat reactor is remarkable. We have a device giving heat energy compatible with nuclear transformations, but it operates at low energy and gives neither nuclear radioactive waste nor emits radiation... at least one order of magnitude higher than any conventional source." ~Lugano Report 10/2014***

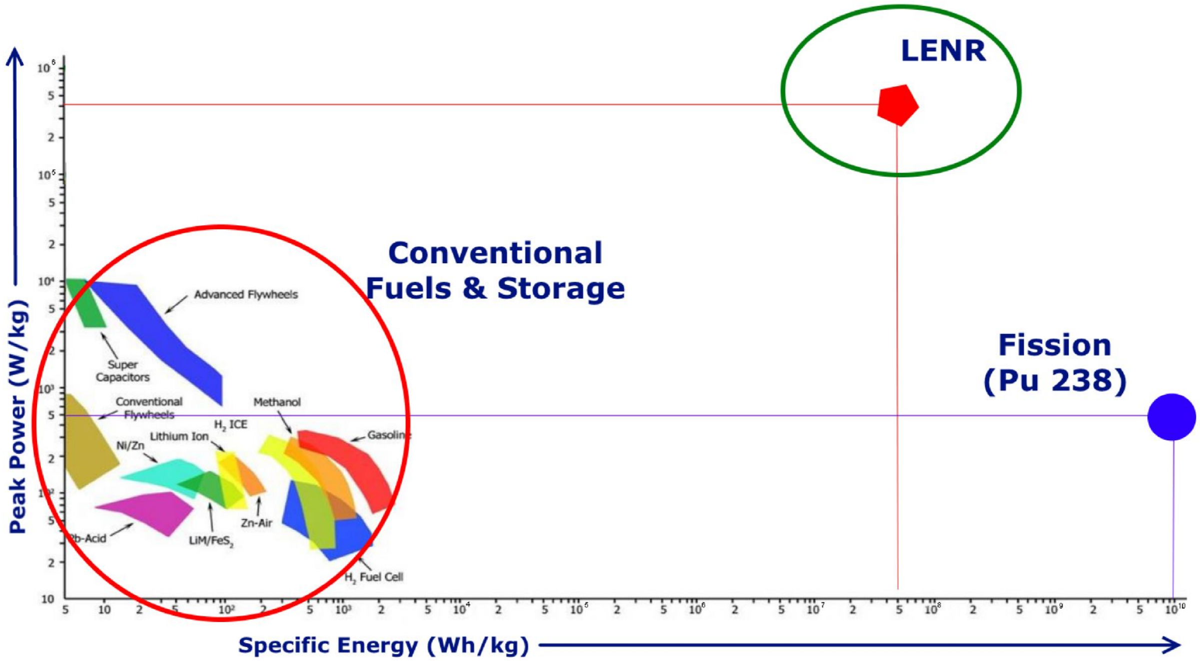

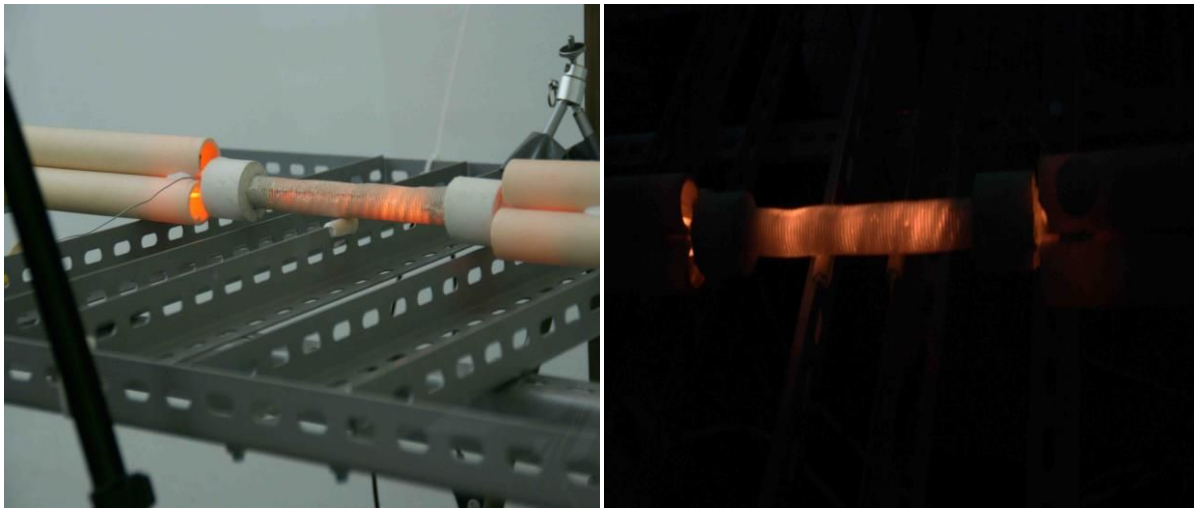

Source: "Observation of abundant heat production from a reactor device and of isotopic changes in the fuel "

The 3rd-Party 2014 "Lugano Report" Indicates Nuclear Transmutation from LENR – This Alone Would Be Revolutionary if Fully Validated

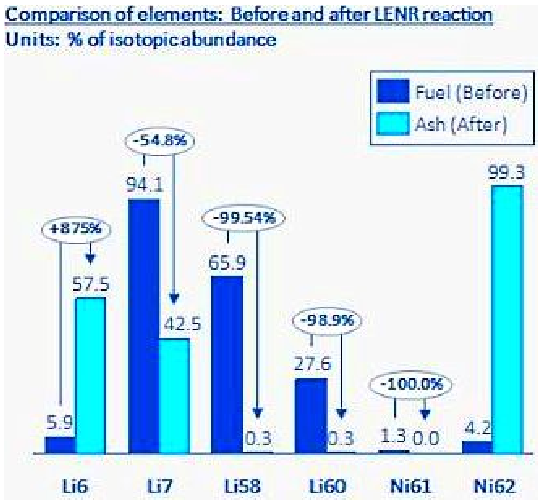

The Lugano report is authored by credible scientists: Giuseppe Levi - Bologna University, Bologna, Italy; Evelyn Foschi - Bologna, Italy; Bo Höistad, Roland Pettersson and Lars Tegnér - Uppsala University, Uppsala, Sweden; Hanno Essén - Royal Institute of Technology, Stockholm, Sweden.

There is also *substantial* evidence supporting progress towards higher power LENR+

In January 2014, the US Dept. of Energy announced it would fund LENR related projects via ARPA-E (Advanced Research Projects Agency-Energy; it's the US government agency tasked with promoting and funding research and development of advanced energy technologies. Modeled after DARPA – Defense Advanced Research Projects Agency).

Links:

- https://arpa-e-foa.energy.gov/#FoaId63d6bcce-92dc-4656-a650-1111825cfd42
- Direct PDF download: https://arpa-e-foa.energy.gov/FileContent.aspx?FileID=1c56ac4a-0acd-43ee-a2ec-ab80b33f4146

NASA hired Boeing in 2013 to design an airplane that could use LENR as its energy source. NASA acknowledged using public funds for LENR research after attending Leonardo Corporation (Rossi) demos in 2011. After investigating Rossi in detail and attending his demos, a NASA report by Michael Nelson in Sept. 2011 concluded it's "Difficult to rule Rossi out." In May 2012, NASA acknowledged it was investigating the kW LENR claims. February 2014: NASA presentation "Low Energy Nuclear Reaction Aircraft" – http://nari.arc.nasa.gov/sites/default/files/SeedlingWELLS.pdf

In July 2012, National Instruments publicly announced it is supplying software and control systems to the LENR industry. At NIWeek in August 2012, NI hosted an LENR (Celani) demo in front of a reported ***3800 participants***, including 2000 NI engineers with three NI engineers performing all measurements.

On February 25, 2013, STMicroelectronics filed for a an LENR patent for energy generation www.google.com/patents/US20130243143 (image below from the Patent).

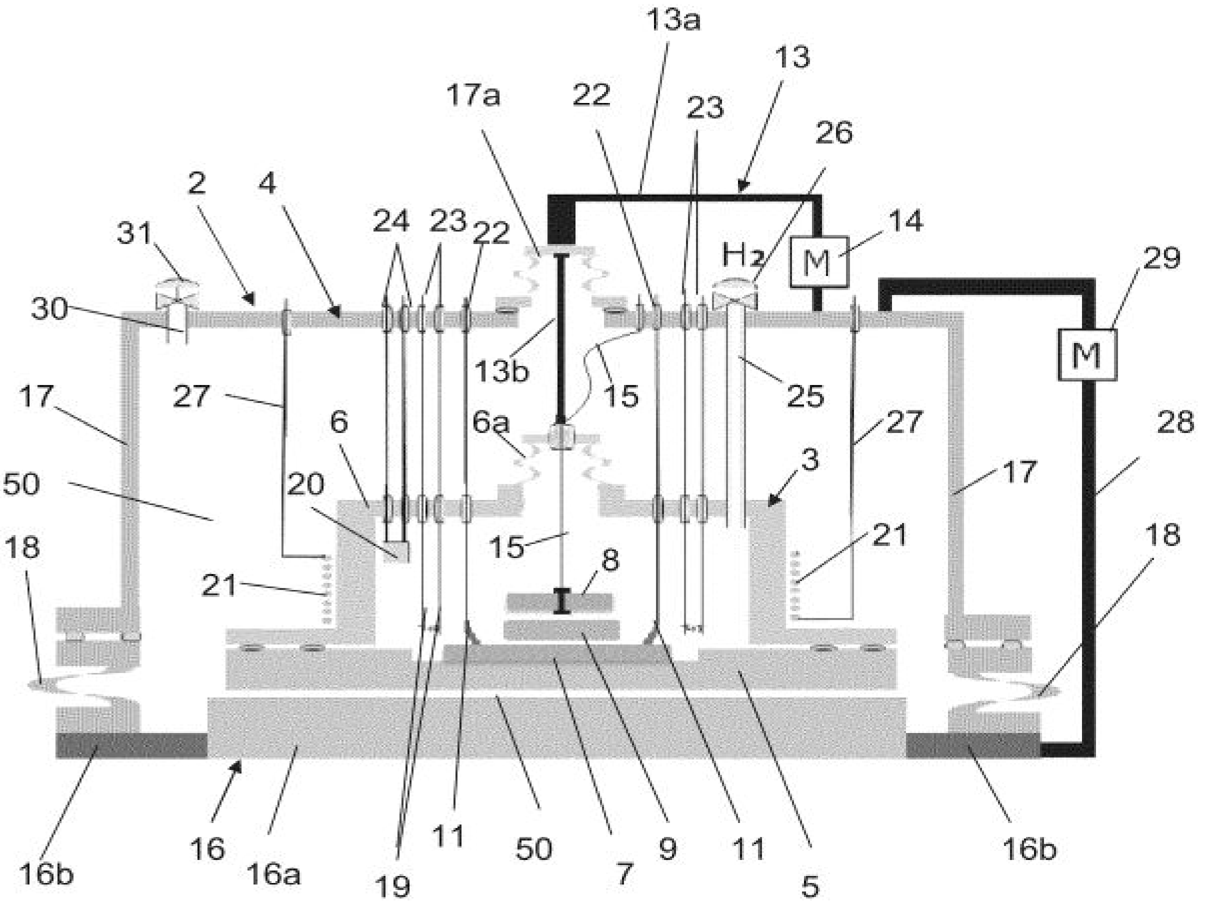

Brillouin are also claiming high power operation and pending commercial products using Ni/H. NicHenergy also progressing. In August 2012, Brillouin was granted a patent in China for its Brillouin Boiler.

In September 2012, Leonardo Corporation received a Safety Inspection Certificate from SGS, a prominent European testing agency, on his 1MW E-CAT.
http://www.scribd.com/doc/105839897/EFA-rep-1107

On Aug 30, 2012, President Obama issued an executive order: *"Instead of burning fuel in an on-site boiler to produce thermal energy & also purchasing electricity from the grid, a manufacturing facility can use a Combined Heat & Power (CHP) system to provide both types of energy in one efficient step.... Strongly encourage efforts to achieve a national goal of deploying* ***40 Gigawatts*** *of new, cost effective industrial CHP in the US by the end of 2020."* For comparison, 40 Gigawatts is approximately the peak power consumption of the entire Great Britain! Direct link to the White House:
http://www.whitehouse.gov/the-press-office/2012/08/30/executive-order-accelerating-investment-industrial-energy-efficiency

On May 20, 2013 an independent 3rd-party validation report performed by seven credible scientists was published validating Rossi's e-CAT technology. *"The results obtained indicate that energy was produced in* ***decidedly higher quantities than what may be gained from any conventional source****....the results obtained place both devices several orders of magnitude outside the bounds of the Ragone plot*[183] *region for chemical sources. Even from the standpoint of a "blind" evaluation of volumetric energy density, if we consider the whole volume of the reactor core and the most conservative figures on energy production, we still get a value of (7.93 ± 0.8) 102 MJ/Liter that is one order of magnitude higher than any conventional source."* http://ecat.com/files/Indication-of-anomalous-heat-energy-production-in-a-reactor-device.pdf

The May 20, 2013 testing was funded by ELFORSK AB, the Swedish energy R&D organization established by Swedish energy utilities and manufacturers. They proclaimed *"The measurements show that* ***the catalyst produces significantly more energy than can be explained by ordinary chemical reactions****. The results are very remarkable. What lies behind the extraordinary heat production* ***cannot be explained today.****"* ELFORSK has indicated they will continue to invest in the e-cat technology.
www.elforsk.se/Aktuellt/Svenska-forskare-har-testat-Rossis-energikatalysator--E-cat/

Download: www.elforsk.se/Global/Aktuellt/Artikel%20Arxiv%201305%203913.pdf

In late 2014, India announced it re-opened its funding of LENR and is getting back into the R&D. On Mars 29, 2016, the ***Times of India*** announced that ***NTPC*** (India's largest power utility company) was organizing the third LENR-India Forum meeting in Bangalore http://timesofindia.indiatimes.com/good-governance/articleshow/51598923.cms

On October 5, 2014, a group of 11 scientists from University of Bologna and University of Uppsala performed and published successful validation testing of the E-Cat. Results indicated the E-Cat as a revolutionary device. "In summary, the performance of the E-Cat reactor is remarkable. We have a device giving heat energy compatible with nuclear transformations, but it operates at low energy and gives neither nuclear radioactive waste nor emits radiation."

During 2015, Leonardo Corporation was granted a Patent for Rossi's LENR system in the USA.

---

[183] Chart used for performance comparison of various energy storing devices

People who have validated Leonardo Corporation's e-cat and/or are publicly backing the breakthrough claims

Sergio Focardi, Emeritus Professor, University of Bologna. Led the Italian National Institute for Nuclear physics and the faculty of Mathematics, physical and natural science at the University of Bologna.

Hanno Essén, Royal Institute of Technology, Stockholm, Sweden.

http://ecat.com/files/Indication-of-anomalous-heat-energy-production-in-a-reactor-device.pdf

Giuseppe Levi, Professor Physics, University of Bologna, Italy.

https://www.unibo.it/sitoweb/giuseppe.levi/cv

http://ecat.com/files/Indication-of-anomalous-heat-energy-production-in-a-reactor-device.pdf

Fabio Penon, Masters Nuclear Engineering.

http://www.scribd.com/doc/105322688/Penon4-1

April 2016 – Leonardo Corporation: "independent 3rd-party validation…overwhelmingly positive results"

> *MIAMI, April 6, 2016 /PRNewswire/ -- Leonardo Corporation announced today that on March 29, 2016, Leonardo Corporation received independent third party validation of the overwhelmingly positive results of a nearly yearlong test of Leonardo's 1MW Energy Catalyzer ("E-Cat"). According to the inventor, Andrea Rossi, the E-Cat generates a low energy nuclear reaction ("LENR") which produces excess heat energy at a cost substantially below more traditional energy sources. According to the independent third party report, over the 352 day test period, the E-Cat consistently generated energy at a rate in excess of six (6) times the amount of energy consumed by the plant, often generating energy exceeding fifty (50) times the amount of energy consumed during the same period. According to Andrea Rossi, Leonardo Corporation considers the results of the third party test to be "an overwhelming success" and that "the world is one step closer to the realization of a commercially available new, clean and efficient energy source."*
>
> *The independent third party validation test was performed by Dr. Ing. Fabio Penon, a Ph.D. in Nuclear Engineering. --- "The results of Dr. Penon's test was consistent with the measurements taken by the representatives of Leonardo Corporation --- during the course of the test" said inventor Andrea Rossi.*

(Source: http://www.prnewswire.com/news-releases/ ~Ozzie)

Alexander Parkhomov, who has replicated Leonardo Corporation's E-Cat.

David Bianchini, M.Sc. Physicist, Radiation Measurements Specialist.

http://www.scribd.com/doc/105322688/Penon4-1

http://ecat.com/files/Indication-of-anomalous-heat-energy-production-in-a-reactor-device.pdf

Mats Lewan, Swedish Tech journalist NyTeknik.

http://www.nyteknik.se/nyheter/energi_miljo/energi/article3264362.ece

Dr. Roland Pettersson, Professor Chemistry Uppsala University (retired).

http://ecat.com/files/Indication-of-anomalous-heat-energy-production-in-a-reactor-device.pdf

David Roberson, BSEE, Design partner for Microchip Technology.

http://www.nyteknik.se/incoming/article3295451.ece/BINARY/Analysis+Ecat+test+Oct+6+by+David+Roberson+%28pdf%29

Dr. Christos Stremmenos – Chemical Engineer, Professor (retired) in the Dept of Physical and Inorganic Chemistry, University of Bologna (Italy), ex Ambassador of Greece in Italy.

Video: http://www.youtube.com/watch?v=7NuNNicWV6k

Torbjörn Hartman – Senior Research Engineer, Svedberg Laboratory, Uppsala University, Sweden.

http://ecat.com/files/Indication-of-anomalous-heat-energy-production-in-a-reactor-device.pdf

http://katalog.uu.se/empInfo/?languageId=1&id=N96-5170

Bo Höistad – Professor Physics and Astronomy, Nuclear Physics, Uppsala University, Sweden.

http://ecat.com/files/Indication-of-anomalous-heat-energy-production-in-a-reactor-device.pdf

http://katalog.uu.se/empInfo/?languageId=1&id=XX1060

Lars Tegnér – Professor Engineering Sciences, Uppsala University, Sweden.

http://ecat.com/files/Indication-of-anomalous-heat-energy-production-in-a-reactor-device.pdf

http://katalog.uu.se/empInfo/?languageId=1&id=N9-1431

Evelyn Foschi – Product Develop, CEI X-ray, Bologna, Italy.

http://arxiv.org/abs/1305.3913

http://ecat.com/files/Indication-of-anomalous-heat-energy-production-in-a-reactor-device.pdf

Aldo Proia, CEO of Prometeon – an E-cat licensee.

http://alessandrosicurocomunication.wordpress.com/2012/11/05/intervista-a-aldo-proiadirettore-e-amministratore-delegato-della-prometeon-s-r-l/

FACT 3 EVIDENCE

Commercial LENR+, if it exists, would have advantages vs. existing energy sources

Data source: NASA, 2014

a. **Limitless** – The current fuel for LENR, small amounts of nickel & hydrogen, is nearly limitless, using one of the most abundant metals[184] along with the most abundant elements that can be ***obtained from water***. It has been calculated by a NASA scientist that 1% of the current nickel mined yearly is sufficient to meet the worlds current energy needs. No combustion process takes place, rather, it appears the ***hydrogen is fused with nickel and transmuted into copper + energy***. LENR also appears possible using metals other than nickel and palladium.

b. **Powerful** – LENR reportedly has a very high energy density that is up to **8 million times greater than today's combustion processes** (oil, coal, NG) and reportedly ***higher than today's commercial fission***.

c. **Green & Safe** – LENR appears to be 100% green, safe and carbon free. LENR is nuclear, however it does not require uranium or plutonium, has radioactive byproducts or radiation, and operates at relatively low temperatures with no risk of dangerous chain reactions.

d. **Low Cost** – The LENR reactors to date appear to be low cost and may create energy at the lowest cost/kWh (estimated $55k for a 1MW LENR reactor).

e. **Portable & Scalable** – LENR reactors to date appear very small and with no moving parts; they also appear to be mass producible.

f. **24/7 Operation** – LENR reactors appear capable of operating on a 24/7 basis for up to 6+ months per charge. They do not require any battery storage.

g. **Power on Demand** – LENR reactors output power may be modulated to match the power demand.

h. **Drop-in Replacement** – Some LENR reactors have claimed to operate at 600°-1200°C, allowing for direct replacement in existing power plants globally.

---

[184] Nickel ore prices are $5.50/**ton** (Tainjin Port, 2016); $10/kg for Refined Nickel (≥Ni 99.90%)

"Total replacement of fossil fuels for everything but synthetic organic chemistry."

~Dr. Joseph M. Zawodny, NASA

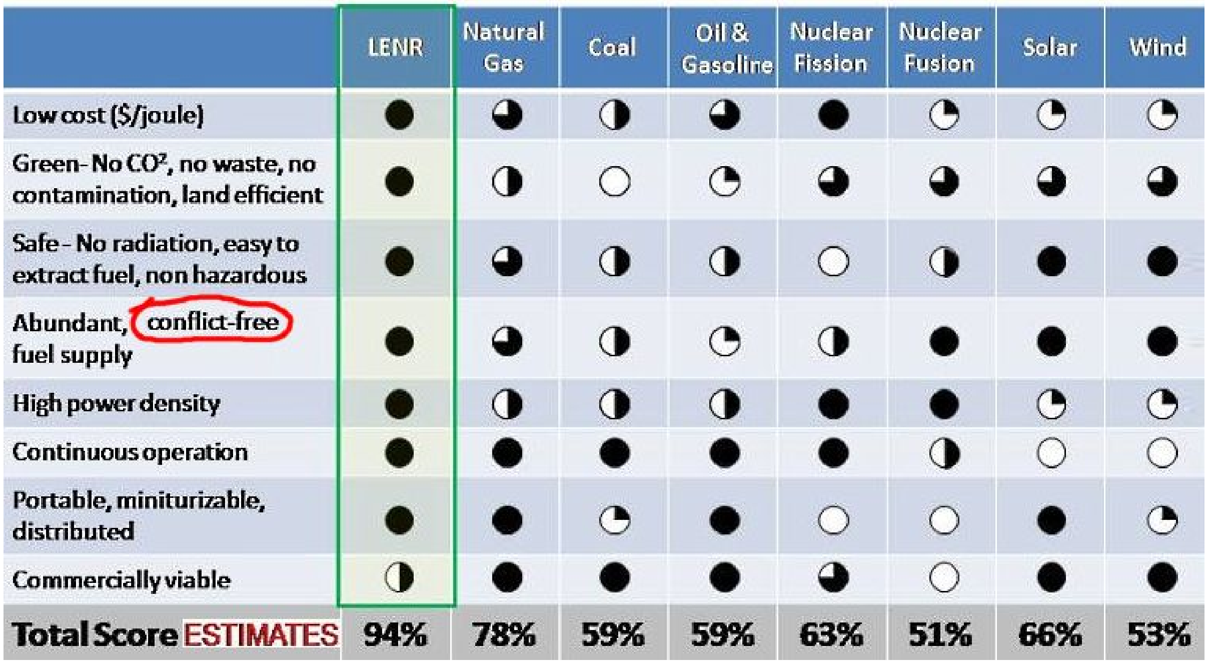

	LENR	Natural Gas	Coal	Oil & Gasoline	Nuclear Fission	Nuclear Fusion	Solar	Wind
Low cost ($/joule)	●	◕	◑	◕	●	◔	◔	◔
Green- No CO^2, no waste, no contamination, land efficient	●	◑	○	◔	◕	◕	◕	◕
Safe - No radiation, easy to extract fuel, non hazardous	●	◕	◑	◑	○	◑	●	●
Abundant, conflict-free fuel supply	●	◕	◑	◔	◑	●	●	●
High power density	●	◑	◑	◑	●	●	◔	◔
Continuous operation	●	●	●	●	●	◑	○	○
Portable, miniturizable, distributed	●	●	◔	●	○	○	●	◔
Commercially viable	◑	●	●	●	◕	○	●	●
Total Score ESTIMATES	**94%**	**78%**	**59%**	**59%**	**63%**	**51%**	**66%**	**53%**

So, is LENR a game changer in energy?

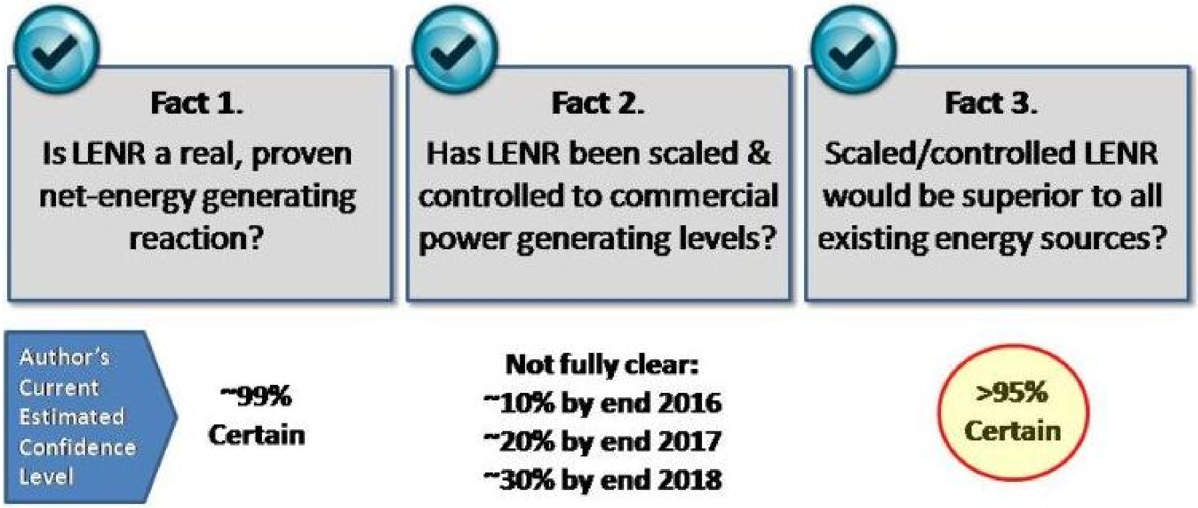

Fact 1.
Is LENR a real, proven net-energy generating reaction?

Fact 2.
Has LENR been scaled & controlled to commercial power generating levels?

Fact 3.
Scaled/controlled LENR would be superior to all existing energy sources?

Author's Current Estimated Confidence Level

~99%
Certain

Not fully clear:
~10% by end 2016
~20% by end 2017
~30% by end 2018

>95%
Certain

LENR, if and when it is Commercialized, would change everything

1. Potentially all competing forms of energy generation will disappear over the next 10-30 years. ***"Total replacement of fossil fuels for everything but synthetic organic chemistry."* ~NASA 10/11**

2. It will create a long term sustained boom in manufacturing, likely larger than any yet seen.

3. It will revolutionize aviation, transportation and space exploration, potentially reducing the space launch costs by a factor of 5-1000X and dramatically increasing velocities for deep space and sub-orbital travel. ***"Revolutionizes Aviation and Access to Space."* ~NASA 10/11**

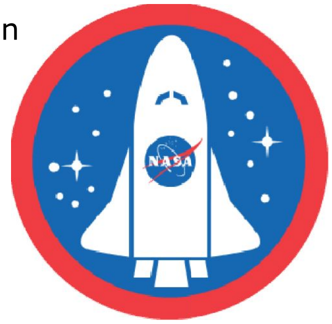

4. It will enable ***cheap desalinization of sea-water*** across the globe and revolutionize agriculture, creating a worldwide bread-basket ***and increasing the value of dry lands***.

5. It will decentralize some power from governments and alter how people are taxed.

6. It will have profound implications on geopolitics and military applications, e.g. subs silent underwater for years, drones aloft for years, new weapons, etc.

7. It enabled the transmutation of one metal into another (at least the transition of metals), potentially enabling an unlimited supply of any metal (e.g. rare earths, ***gold***, platinum etc).

8. It will enable humans to limit and ***possibly reverse the effects of Global Climate Change***.

"THE POTENTIAL APPLICATIONS OF THIS PHENOMENON, IF COMMERCIALIZED, ARE UNLIMITED"

~U.S. DEPT. OF DEFENSE, 2009

DOWNLOADS:

http://coldfusionnow.org/wp-content/uploads/2012/06/DIA_2009_11_Tech_Forecast.pdf

http://newenergytimes.com/v2/news/2009/2009DIA-08-0911-003.pdf

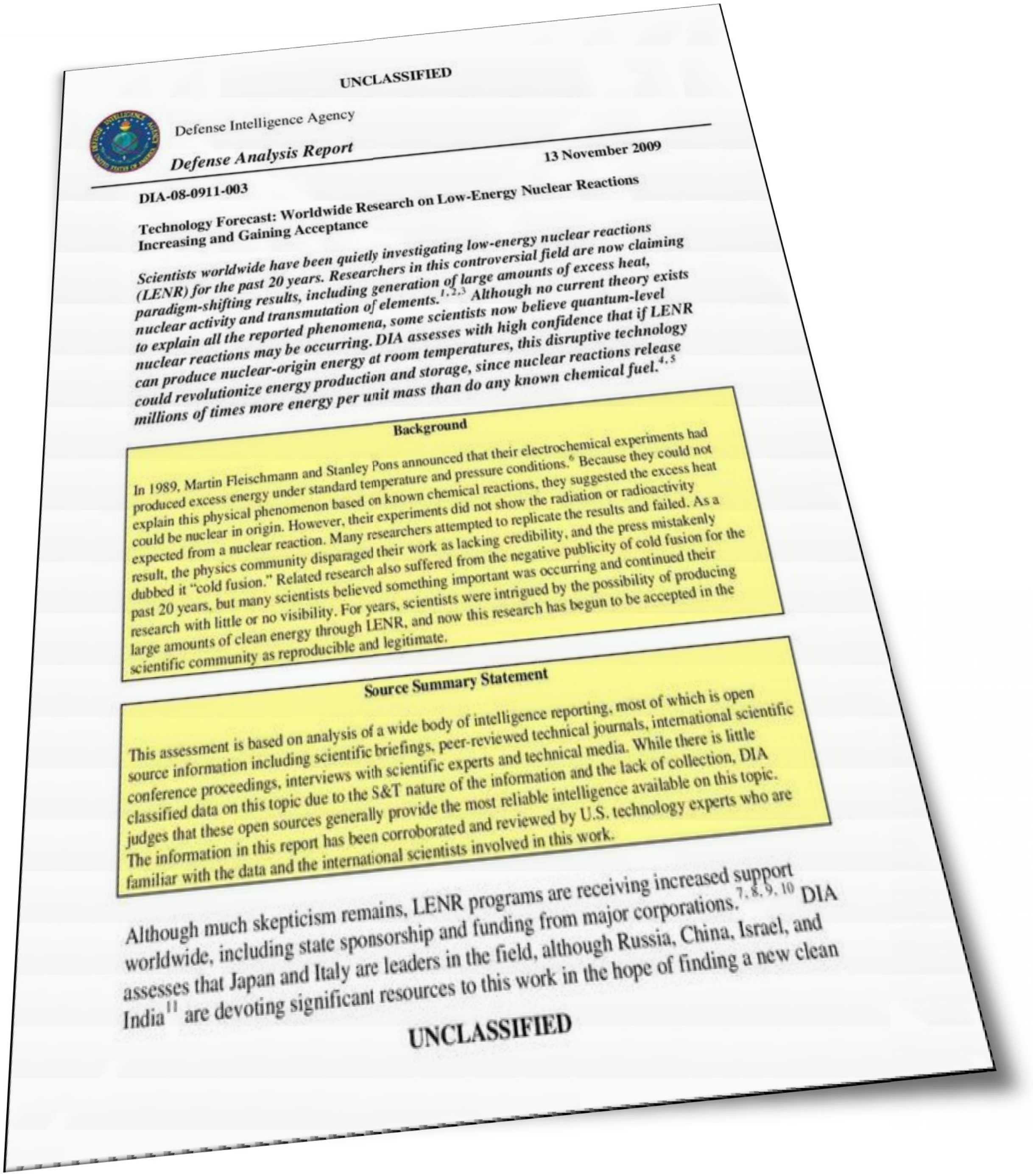

UNCLASSIFIED

Defense Intelligence Agency

Defense Analysis Report

13 November 2009

DIA-08-0911-003

Technology Forecast: Worldwide Research on Low-Energy Nuclear Reactions Increasing and Gaining Acceptance

Scientists worldwide have been quietly investigating low-energy nuclear reactions (LENR) for the past 20 years. Researchers in this controversial field are now claiming paradigm-shifting results, including generation of large amounts of excess heat, nuclear activity and transmutation of elements.[1,2,3] Although no current theory exists to explain all the reported phenomena, some scientists now believe quantum-level nuclear reactions may be occurring. DIA assesses with high confidence that if LENR can produce nuclear-origin energy at room temperatures, this disruptive technology could revolutionize energy production and storage, since nuclear reactions release millions of times more energy per unit mass than do any known chemical fuel.[4,5]

Background

In 1989, Martin Fleischmann and Stanley Pons announced that their electrochemical experiments had produced excess energy under standard temperature and pressure conditions.[6] Because they could not explain this physical phenomenon based on known chemical reactions, they suggested the excess heat could be nuclear in origin. However, their experiments did not show the radiation or radioactivity expected from a nuclear reaction. Many researchers attempted to replicate the results and failed. As a result, the physics community disparaged their work as lacking credibility, and the press mistakenly dubbed it "cold fusion." Related research also suffered from the negative publicity of cold fusion for the past 20 years, but many scientists believed something important was occurring and continued their research with little or no visibility. For years, scientists were intrigued by the possibility of producing large amounts of clean energy through LENR, and now this research has begun to be accepted in the scientific community as reproducible and legitimate.

Source Summary Statement

This assessment is based on analysis of a wide body of intelligence reporting, most of which is open source information including scientific briefings, peer-reviewed technical journals, international scientific conference proceedings, interviews with scientific experts and technical media. While there is little classified data on this topic due to the S&T nature of the information and the lack of collection, DIA judges that these open sources generally provide the most reliable intelligence available on this topic. The information in this report has been corroborated and reviewed by U.S. technology experts who are familiar with the data and the international scientists involved in this work.

Although much skepticism remains, LENR programs are receiving increased support worldwide, including state sponsorship and funding from major corporations.[7,8,9,10] DIA assesses that Japan and Italy are leaders in the field, although Russia, China, Israel, and India[11] are devoting significant resources to this work in the hope of finding a new clean

UNCLASSIFIED

Theory

Leading LENR Theory #1: *BECNF theory (Bose-Einstein Condensate Nuclear Fusion)*: within a metal lattice and under very specific conditions, a hydrogen proton can overcome a suppressed coulomb barrier enabling fusion at low temperatures. (PRELIMINARY)

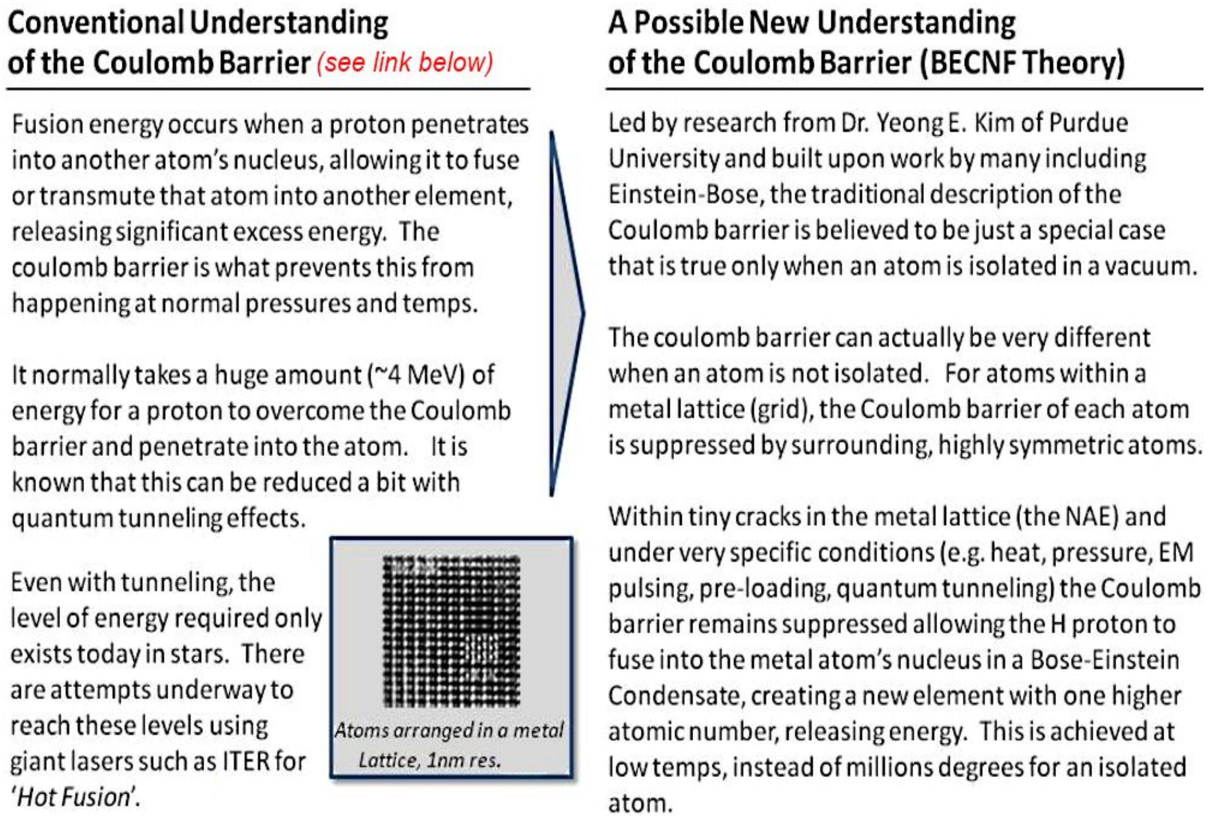

Conventional Understanding of the Coulomb Barrier *(see link below)*

Fusion energy occurs when a proton penetrates into another atom's nucleus, allowing it to fuse or transmute that atom into another element, releasing significant excess energy. The coulomb barrier is what prevents this from happening at normal pressures and temps.

It normally takes a huge amount (~4 MeV) of energy for a proton to overcome the Coulomb barrier and penetrate into the atom. It is known that this can be reduced a bit with quantum tunneling effects.

Even with tunneling, the level of energy required only exists today in stars. There are attempts underway to reach these levels using giant lasers such as ITER for *'Hot Fusion'*.

Atoms arranged in a metal Lattice, 1nm res.

A Possible New Understanding of the Coulomb Barrier (BECNF Theory)

Led by research from Dr. Yeong E. Kim of Purdue University and built upon work by many including Einstein-Bose, the traditional description of the Coulomb barrier is believed to be just a special case that is true only when an atom is isolated in a vacuum.

The coulomb barrier can actually be very different when an atom is not isolated. For atoms within a metal lattice (grid), the Coulomb barrier of each atom is suppressed by surrounding, highly symmetric atoms.

Within tiny cracks in the metal lattice (the NAE) and under very specific conditions (e.g. heat, pressure, EM pulsing, pre-loading, quantum tunneling) the Coulomb barrier remains suppressed allowing the H proton to fuse into the metal atom's nucleus in a Bose-Einstein Condensate, creating a new element with one higher atomic number, releasing energy. This is achieved at low temps, instead of millions degrees for an isolated atom.

The Coulomb barrier, named after Coulomb's law, which is named after physicist Charles-Augustin de Coulomb (1736–1806), is the energy barrier due to electrostatic interaction that two nuclei need to overcome so they can get close enough to undergo a nuclear reaction.

Links for further study:

- http://hyperphysics.phy-astr.gsu.edu/hbase/nucene/coubar.html
- http://burro.cwru.edu/academics/Astr221/StarPhys/coulomb.html

Leading LENR Theory #2: *Widom-Larsen theory*: within a metal lattice and under very specific conditions, a hydrogen proton can capture its electron, creating a neutron, which *bonds with hydrogen*, causing beta decay[185] which releases significant energy. **(PRELIMINARY)**

The Widom-Larsen Theory postulates that it is not nuclear fusion of the proton, instead, within a metallic lattice (e.g. Ni) of a specific geometry and under very specific conditions, when pulsed with EM[186] stimulation, H protons can capture nearby electrons forming neutrons. See http://newenergytimes.com/v2/sr/WL/WLTheory.shtml and www.cleantechblog.com/2012/08/seducing-the-coulumb-barrier.html

The new neutrons are then captured by the H, forming H_2 (Deuterium) which is one neutron heavier, and sheds excess binding energy to the lattice via beta decay. Further pulses allow the process to repeat to form H_3 (Tritium), H_4 (Quantium), and ultimately Helium. Each successive cascade and decay releasing significantly higher levels of energy.

This sustained process results in beta decay, transmutation and significant excess heat released into the metal lattice. This process leverages the weak nuclear force and does not require nuclear fusion to occur.

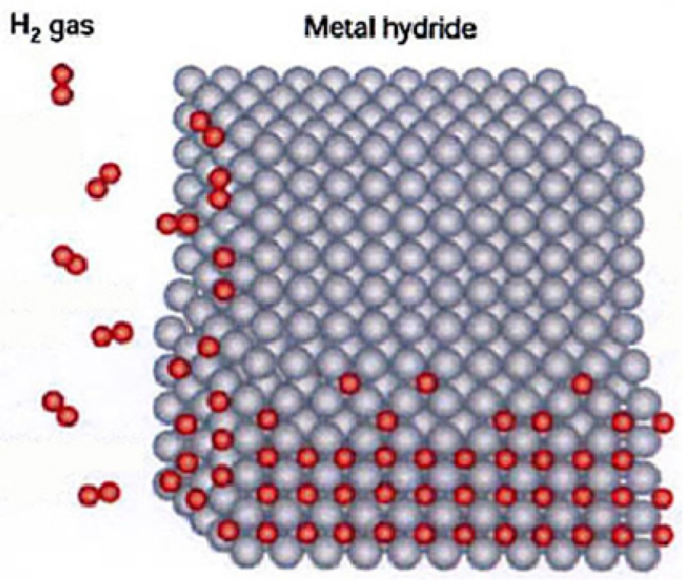

Beta decay results in significant energy release in the lattice - NASA http://futureinnovation.larc.nasa.gov/view/articles/futurism/bushnell/low-energy-nuclear-reactions.html

The Widom-Larsen Theory, however, predicts the existence of Neutrinos, which have yet to be detected and leaves a few other key questions unanswered.
http://nextbigfuture.com/2012/02/short-rebuttal-to-proponents-and.html

---

[185] Proton transformed into a neutron, or vice versa, inside an atomic nucleus.

[186] Electromagnetism

LENR may be a sequence of three well-understood nuclear and chemical reactions

Appears explainable within the Standard Model of Physics, no new physics is required. (PRELIMINARY)

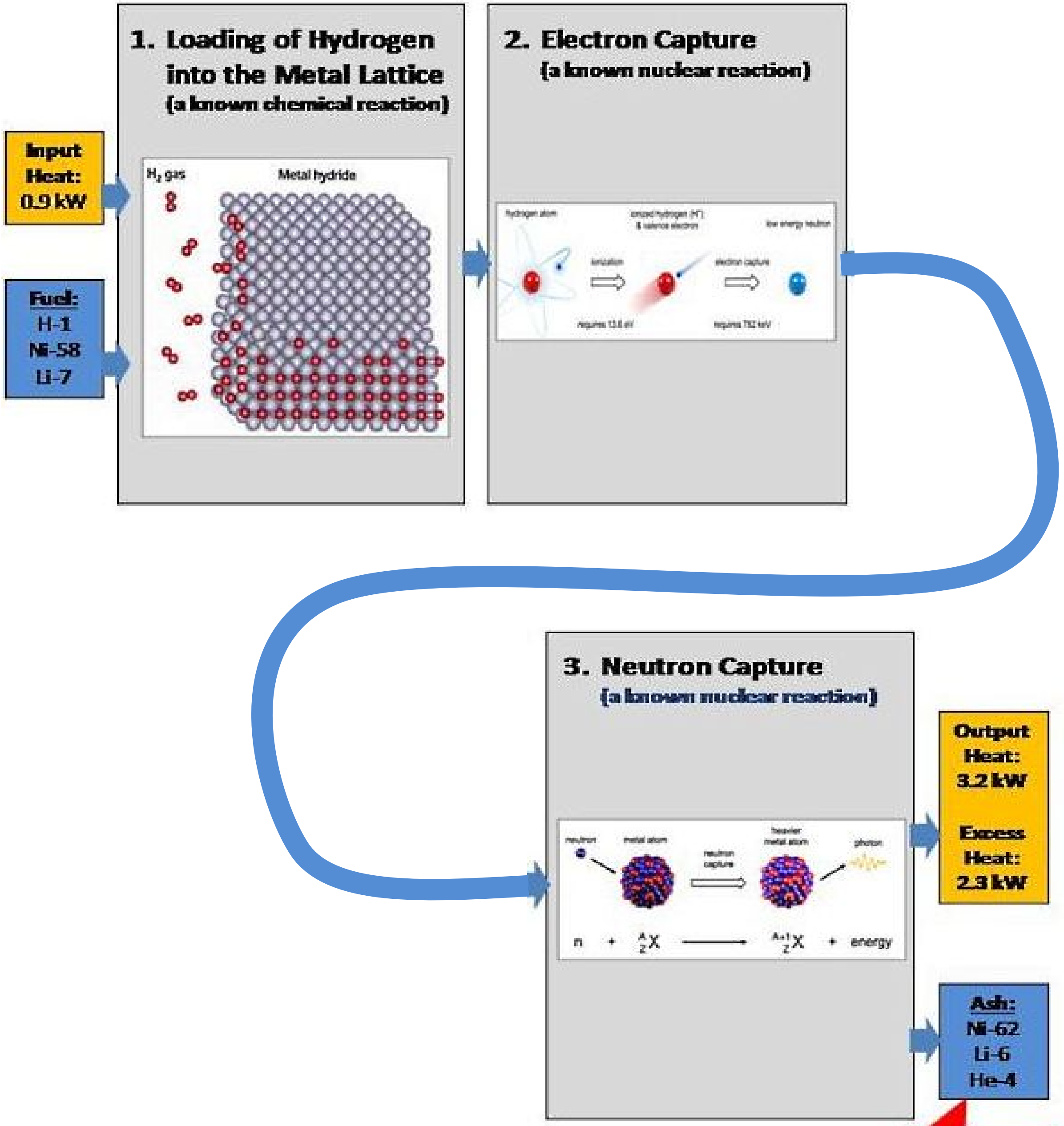

The LENR process essentially transmutes the fuel elements, Nickel and Lithium, releasing significant excess heat. In this case (Lugano report – http://amsacta.unibo.it/4084/1/LuganoReportSubmit.pdf), 900 Watts in equals 3,200 Watts out.

Supporting Links

- http://lenr-canr.org
- www.E-CATworld.com
- http://futureinnovation.larc.NASA.gov/view/articles/futurism/bushnell/low-energy-nuclear-reactions.htm l
- http://seekingalpha.com/article/406981-cold-fusion-a-cure-for-high-gas-prices
- www.grc.nasa.gov/WWW/sensors/PhySen/docs/LENR_at_GRC_2011.pdf
- http://oilprice.com/Energy/Energy-General/New-LENR-Machine-is-the-Best-Yet.html
- www.wired.co.uk/news/archive/2012-02/27/rossi-roundup?page=all
- http://nickelpower.org/2011/12/30/replicators-as-if-december-30-2011/
- www.forbes.com/sites/markgibbs/2011/12/31/2012-the-year-of-cold-fusion/
- www.forbes.com/sites/markgibbs/2011/10/30/believing-in-cold-fusion-and-the-E-CAT/
- www.opednews.com/articles/Cold-Fusion-is-Here-It-s-by-steve-windisch-120202-446.html
- http://ecat.com
- www.lenrforum.eu
- http://coldfusionnow.org/?p=18469
- www.E-CATworld.com/2012/04/mits-hagelstein-demos-jet-energy-cold-fusion-to-mass-state-senator-tarr/
- www.lenr-canr.org/acrobat/MileyGHnucleartra.pdf
- www.cbsnews.com/video/watch/?id=4955212n
- http://indico.cern.ch/materialDisplay.py?materialId=slides&confId=177379
- http://newenergytimes.com/v2/government/NASA/20110922NASA-Zawodny-GRC-LENR-Workshop.pdf
- www.youtube.com/watch?v=42hrCRx1JJY
- www.blacklightpower.com/technology/validation-reports/
- http://fusiontorch.com/uploads/StormsJudgingValidityOfFleischmannPonsEffect2009.pdf
- www.spiegel.de/international/business/response-to-fukushima-siemens-to-exit-nuclear-energy-business-a-787020.html
- http://world.std.com/~mica/cft.html

LENR experiments since 1989 show temperature, net power gain and power density have continued to scale

CERN Presentation Data, January 2012, Celani

Year	Power Gain (%)	Sustained Power Gain	Sustained Temp	Experimenter
1989	5%	0.1-1	30°C	Fleishmann Pons
1990		3	30°C	Mc Kubre SRIL
1992	8%	8	30°C	Celani
1993	20%	20	40°C	University of Osaka
1993	50%	40	350°C	Piantelli, University of Sienna
1994		10	40°C	Kunimatusu
1995	40%	20	50°C	Celani
1997	200%	20	40°C	University of Illinois
2002	20%	20	30°C	University of Osaka
2003	15%	10	30°C	Celani
2004	200%	20	300°C	Celani
2005	25%	30	180°C	University of Osaka
2008	10%	5	550°C	Celani
2010	15%	26	990°C	Celani
2011	600%	***10,000******	100/600°C	Leonardo Corp.
2012	15%	24*	260°C	Celani Portable Demo
2014	600%	***250,000******	1200°C	Leonardo Corp.

* *Have yet to be fully validated.*

Ref: http://indico.cern.ch/getFile.py/access?resId=3&materialId=slides&confId=177379

Pictures of Modern LENR

Leonardo Corporation, three LENR "E-CATs" without insulation, one insulated.
Photo: Giuseppe Levi, 2011

Leonardo Corporation, 1MW industrial LENR E-CAT power plant, available now. Consists now of 106 individual E-CATs. Andrea Rossi claims this is the world's first commercial LENR device, which he sold to the US military.
Photo: Unknown, October 2011

MIT Nanor LENR reactor.
Photo: Barry Simon, May 2012

Brillouin Boiler Phase 2 reactor. Photo: Ruby Carat, July 2011

Leonardo Corporation, 10Kw residential LENR E-CAT (artist rendering)

Pirelli High School, Rome, Athanor LENR Reactor.
Photo: Ugo Abundo, June 28, 2012

********** End of Tyler van Houwelingen's presentation (excerpts) **********
For the complete presentation visit: **http://www.lenrproof.com**

More Excellent LENR Presentations – 2015, 2016 by Lewis Larsen, Lattice Energy LLC

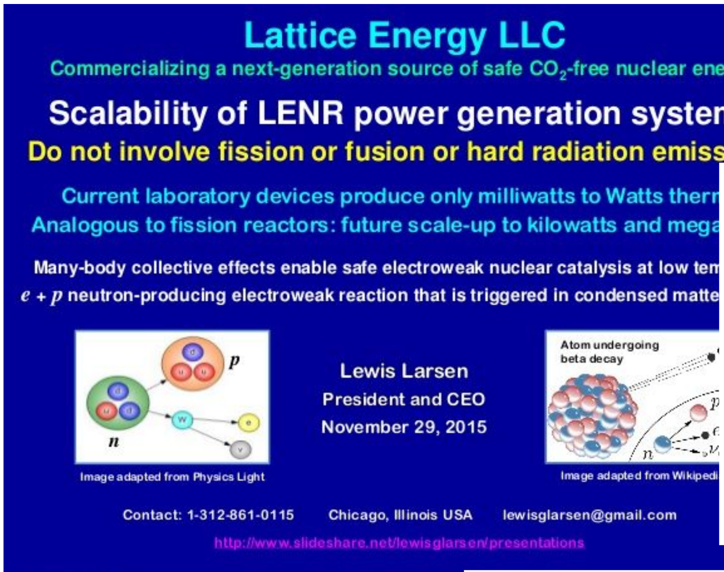

Lattice Energy LLC

Commercializing a next-generation source of safe CO_2-free nuclear energy

Scalability of LENR power generation systems

Do not involve fission or fusion or hard radiation emissions

Current laboratory devices produce only milliwatts to Watts therm

Analogous to fission reactors: future scale-up to kilowatts and mega

Many-body collective effects enable safe electroweak nuclear catalysis at low tem

$e + p$ neutron-producing electroweak reaction that is triggered in condensed matte

Image adapted from Physics Light

Lewis Larsen
President and CEO
November 29, 2015

Atom undergoing beta decay

Image adapted from Wikipedi

Contact: 1-312-861-0115 Chicago, Illinois USA lewisglarsen@gmail.com

http://www.slideshare.net/lewisglarsen/presentations

November 29, 2015 Lattice Energy LLC, Copyright 2015 A

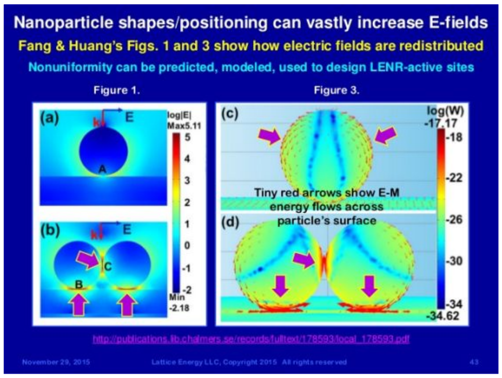

Nanoparticle shapes/positioning can vastly increase E-fields

Fang & Huang's Figs. 1 and 3 show how electric fields are redistributed

Nonuniformity can be predicted, modeled, used to design LENR-active sites

Tiny red arrows show E-M energy flows across particle's surface

http://publications.lib.chalmers.se/records/fulltext/178593/local_178593.pdf

November 29, 2015 Lattice Energy LLC, Copyright 2015 All rights reserved 43

These are sample slides – visit the links below for the complete presentations.

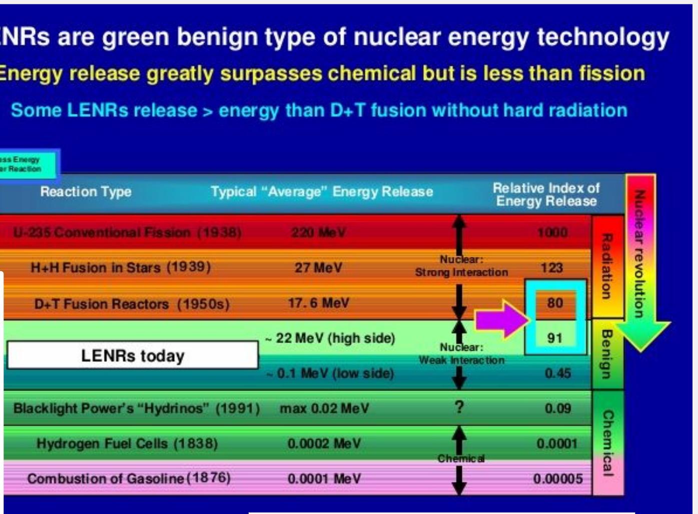

LENRs are green benign type of nuclear energy technology

Energy release greatly surpasses chemical but is less than fission

Some LENRs release > energy than D+T fusion without hard radiation

Reaction Type	Typical "Average" Energy Release		Relative Index of Energy Release
U-235 Conventional Fission (1938)	220 MeV		1000
H+H Fusion in Stars (1939)	27 MeV	Nuclear: Strong Interaction	123
D+T Fusion Reactors (1950s)	17.6 MeV		80
LENRs today	~ 22 MeV (high side)	Nuclear: Weak Interaction	91
	~ 0.1 MeV (low side)		0.45
Blacklight Power's "Hydrinos" (1991)	max 0.02 MeV	?	0.09
Hydrogen Fuel Cells (1838)	0.0002 MeV	Chemical	0.0001
Combustion of Gasoline (1876)	0.0001 MeV		0.00005

mber 29, 2015 Lattice Energy 9

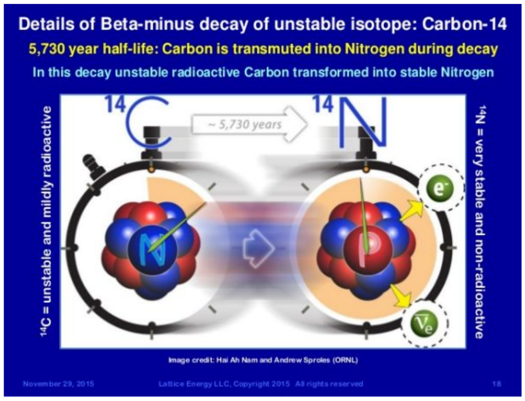

Details of Beta-minus decay of unstable isotope: Carbon-14

5,730 year half-life: Carbon is transmuted into Nitrogen during decay

In this decay unstable radioactive Carbon transformed into stable Nitrogen

Image credit: Hai Ah Nam and Andrew Sproles (ORNL)

November 29, 2015 Lattice Energy LLC, Copyright 2015 All rights reserved 18

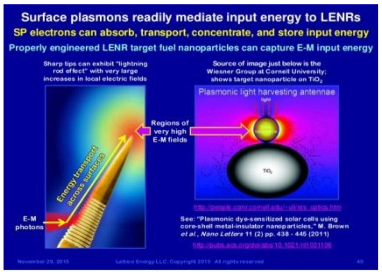

Surface plasmons readily mediate input energy to LENRs

SP electrons can absorb, transport, concentrate, and store input energy

Properly engineered LENR target fuel nanoparticles can capture E-M input energy

Sharp tips can exhibit "lightning rod effect" with very large increases in local electric fields

Source of image just below is the Wiesner Group at Cornell University; shows target nanoparticle on TiO_2

http://people.ccmr.cornell.edu/~uli/res_optics.htm

See: "Plasmonic dye-sensitized solar cells using core-shell metal-insulator nanoparticles," M. Brown *et al.*, *Nano Letters* 11 (2) pp. 438 - 445 (2011)

http://pubs.acs.org/doi/abs/10.1021/nl1031106

November 29, 2015 Lattice Energy LLC, Copyright 2015 All rights reserved 40

Watch the complete presentations at:

http://www.slideshare.net/lewisglarsen/lattice-energy-llc-scalability-of-lenr-power-generation-systems-nov-29-2015

http://www.slideshare.net/lewisglarsen/lattice-energy-llc-neutron-production-and-nucleosynthesis-in-electric-discharges-from-lightning-bolts-to-batteries-may-3-2016

Start here: http://www.slideshare.net/lewisglarsen/

Notable LENR development: The HOPE CELL

By "Alchemist" Robert Vancina (Patterson Lakes, Victoria, Australia)

The apparatus in the Patent looks simple enough. But the theory behind how it works – and more importantly how EXACTLY it should be constructed to get the desired energy efficiency – requires studying the technology with great attention to details. This chapter will not go into all the details, which you can learn from the inventor's website www.hopecell.com and his Patent Application http://pdfpiw.uspto.gov/.piw?docid=08409422

The following excerpts from the Patent (edited to fit this book) first explain what the problem is, and then present the practical solution developed by Robert Vancina.

FIELD OF THE INVENTION

The present invention relates to electrolysis of water for producing hydrogen and oxygen gas.

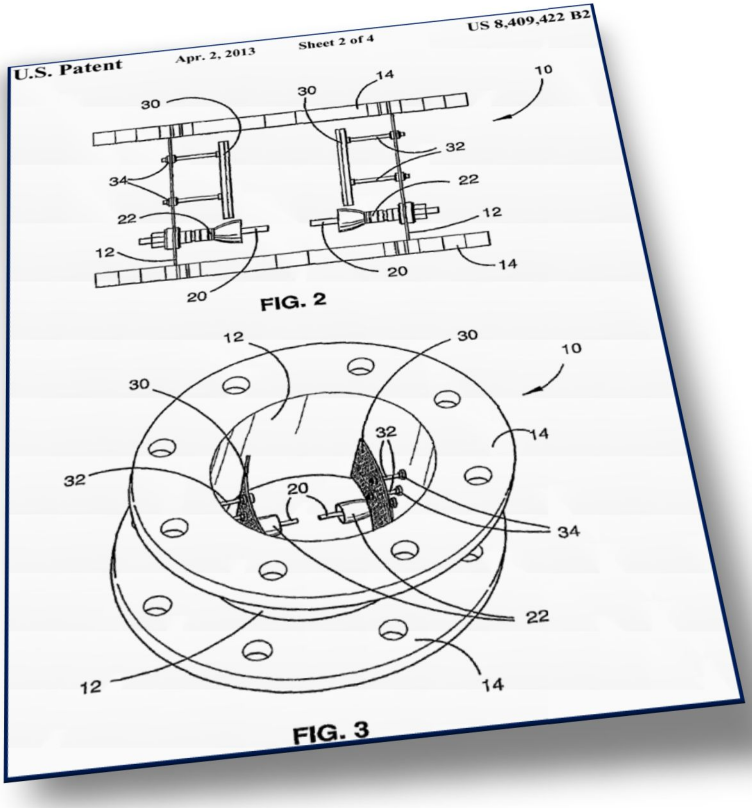
U.S. Patent Apr. 2, 2013 Sheet 2 of 4 US 8,409,422 B2

FIG. 2

FIG. 3

BACKGROUND OF THE INVENTION

Electrolysis technology is increasingly being adopted as a method of generating hydrogen and oxygen where there is a demand for hydrogen/oxygen fuel for combustion or hydrogen fuel cells. One driving force behind this trend is a shift away from fossil fuels as an energy source.

The main types of electrolysis involve alkaline solutions and proton-exchange membranes. While both are ***proven technologies***, they have limited conversion efficiency (i.e. the energy produced versus the energy input to drive the process) of less than 90%. Additionally, there is an initial high capital cost so applications generally are limited to specialist purposes.

A technical paper by Mizuno et. al., entitled "Confirmation of anomalous hydrogen generation by plasma[187] electrolysis" in 4th Meeting of Japan CF Research Society 2003, Iwate, Japan: Iwate University, discusses **hydrogen generation in quantities greater than Faraday's Law predicts**.

Specifically, Mizuno teaches that plasma forms when an applied potential difference between electrodes exceeds 100V in an aqueous solution and that a mixture of oxygen, hydrogen and steam are formed on the surface of a cathode.

However, Mizuno states:

"The generation of hydrogen at levels exceeding Faraday's law is observed when the conditions such as the temperature, current density, input voltage and electrode surface are suitable. The precise conditions are still not known, and controlling these conditions is difficult, so only a few observation of excess hydrogen have been made."

Mizuno observes non-Faradic hydrogen generation, for example, when plasma electrolysis occurred at 2 A/cm^2 of input current at 120V and at an electrolyte temperature of 80°C. Mizuno finally concludes that non-Faradic hydrogen generation occurs when the potential difference between electrodes is several hundred volts, but does not provide any explanation for controlling the plasma beyond short bursts.

A theory explaining plasma electrolysis that produces non-Faradic quantities of hydrogen is outlined in a technical paper by Cirillo et. al., entitled "Transmutation of metal at low energy in a confined plasma in water", in 11th International Nuclear Conference on Condensed Matter Nuclear Science, 2004, Marseille, France.

Specifically, Cirillo teaches that electrolysis is aided by metal anions[188], dissolved in an electrolyte, which form a screen spaced a few nanometers from the cathode, thereby effectively forming an anode. This is known as a double layer.

Under conventional electrolysis conditions, hydrogen gas is generated at the cathode with much of the space between the cathode and the anion screen being filled with H_3O^+ and H_2. Ions of hydrogen migrate through the screen to discharge on the cathode and produce hydrogen gas.

Increasing the applied voltage above 80V has the effect of significantly increasing hydrogen gas production to the point that the space between the cathode and the anion screen becomes filled with hydrogen gas. The gas has a much lower conductivity than liquid electrolyte, so the resistance increases until unstable bursts of plasma form to discharge the potential difference between the cathode and the anion screen. The high localised voltage can result in cathode temperatures, for tungsten electrodes, greater than 3000°C. Such heating of the cathode results in instant vaporization of electrolyte from the surface of the cathode and destabilizes plasma formation.

---

[187] Plasma: an electrically neutral, highly ionized phase of matter composed of ions, electrons, and neutral particles. It is distinct from solids, liquids, and gases.

[188] Anion: a negatively charged ion, especially the ion that migrates to an anode in electrolysis.

Cirillo does not discuss hydrogen generation as a goal and does not address problems of stabilizing plasma.

SUMMARY OF THE INVENTION

The object of the invention is to provide an improved apparatus and method for **stabilizing plasma** for the purpose of generating hydrogen and oxygen gas.

The invention provides a process for producing hydrogen gas and oxygen gas, from water, the process comprising:

(a) Forming an electrolyte including alkaline ions and the water;

(b) Generating plasma between an anode and a cathode immersed in the electrolyte by applying a first electrical potential between the anode and cathode, thereby plasma electrolysing the electrolyte and generating hydrogen and oxygen gas; and

(c) Controlling the process by relocating the generated plasma between two or more further electrodes and the anode.

Robert Vancina believes that overheating of the plasma generating electrode can be avoided by spatially distributing the plasma around the electrolysis cell. Specifically, Vancina believes that in Cirillo's and Mizuno's applications, localisation of the plasma bursts at the plasma electrodes causes such intense heating of the electrodes that the screen layer of alkaline ions adjacent the cathode is disrupted by the hot cathode vaporising nearby electrolyte. As a result, plasma generating conditions are lost and the electrolysis process no longer operates on the basis of plasma electrolysis until the plasma generating electrodes cool sufficiently to form a screen layer of alkaline ions.

Robert Vancina believes that plasma generated at the electrodes can be stabilised, rather than occurring in short bursts, by controlling the location of the plasma with electrical and magnetic fields. As a result, the structure of the alkaline ion screen surrounding the cathode is maintained with largely hydrogen gas filling the gap between the cathode and the alkaline ion screen. Hydrogen ions continue to migrate through the metal anion screen to form hydrogen gas and plasma is constantly initiated at the cathode for stabilisation on the further electrodes. Ions of OH^- migrate to the anode and form oxygen gas.

The relocated plasma is maintained between the further electrodes without an alkaline ion screen layer and, therefore, without a gaseous or vapor dielectric surrounding the electrodes. Nevertheless, the electrolyte treated by plasma is ionised and the ions produce oxygen and hydrogen gas at respective electrodes.

The location of the plasma may be controlled by applying a second electrical potential between each further electrode and the anode.

The location of the plasma may also be controlled by magnetic fields and, preferably, the magnetic fields are produced by permanent magnets. Preferably, the electrolyte comprises water with a concentration of alkaline ions in the range of 0.1-1.0 M.

Preferably the alkaline ions are metal anions and may comprise sodium or potassium. The electrolyte may be formed by mixing water with a hydroxide, chloride or carbonate forms of the metal anions.

Preferably the cathode comprises the cell body in contact with the electrolyte and the anode comprises a metal and is electrically isolated from the cathode.

By forming the cathode as a body of an electrolysis cell, the plasma generated between the cathode and anode is encouraged to spatially disperse away from the points of closest geometrical proximity between the anode and the cathode, thereby assisting to spatially distribute the plasma around the electrolysis cell.

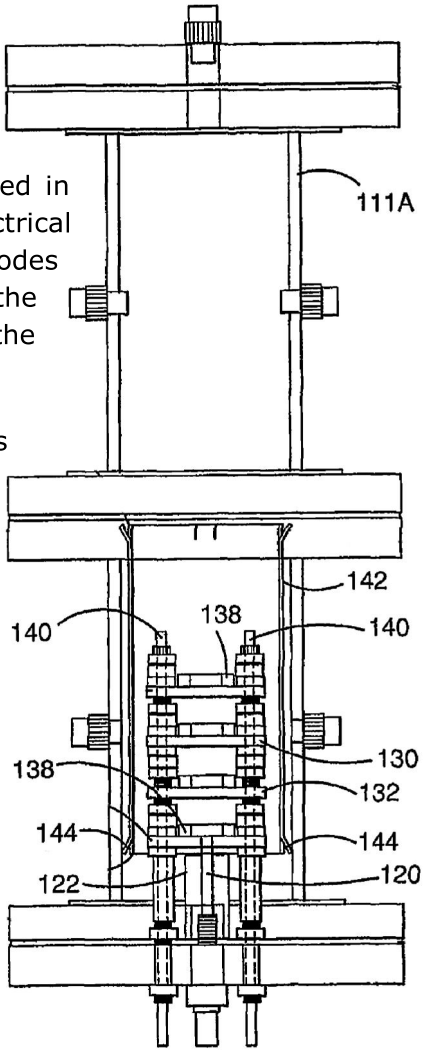

Preferably, the first electrical potential is at least 160 volts, but more preferably, is 180 to 400 volts.

Preferably, the two or more further electrodes are located in close proximity to the cathode so the second electrical potential applied to the two or more further electrodes encourages plasma generated between the cathode and the anode to transfer to between the further electrodes and the anode.

Preferably the second electrical potential is 40 to 200 volts and, more preferably, is 55 to 100 volts.

Preferably, the process includes a further step before step (b) of heating the electrolyte by passing a current in the range 40A to 120A, and more preferably 65A to 85A, between two further electrodes electrically isolated from the anode and immersed within the solution.

Preferably, the heating step heats the electrolyte to a temperature of 50° to 100° Celsius. and more preferably to a temperature of 80° to 95° Celsius.

Preferably the first electrical potential is applied after the electrolyte is heated in accordance with the heating step.

Preferably, step (c) involves applying a second electrical potential to two or more further electrodes in contact with the electrolyte and in close proximity to the first electrodes, the second electrical potential generating an electrical field to cause plasma generated between the cathode and the anode to transfer from the cathode to two or further electrodes to stabilise the plasma.

HOPE CELL Patents registered around the world

- **Method and apparatus for producing hydrogen and oxygen gas**
  United States US B2 8409422
  Patent Granted
- **Method and apparatus for plasma decomposition of methane and other hydrocarbons**
  United States US A1 2013/0153403
  Application published June 20, 2013
- **Method and apparatus for producing hydrogen and oxygen gas**
  United States US A1 2013/0168239
  Application published July 4, 2013
- **Method and apparatus for plasma decomposition of methane and other hydrocarbons**
  Australia AU B2 2010286322
  Patent Granted
- **Method and apparatus for producing hydrogen and oxygen gas**
  Australia AU B2 2008253584
  Patent Granted →→→
- **Method and apparatus for producing hydrogen and oxygen gas**
  Switzerland PCT A1
  WO2008141369
  Issued
- **Method and apparatus for plasma decomposition of methane and other hydrocarbons**
  Switzerland PCT A1
  WO2011022761
  Issued

Australian Government
IP Australia

CERTIFICATE OF GRANT
STANDARD PATENT

2008253584

I, Celia Poole, the Commissioner of Patents, certify that the following are the particulars of this patent appearing in the Register of Patents:

Name and Address of Patentee(s):
Hope Cell Technologies Pty Ltd
Australia

Name of Actual Inventor(s):
Vancina, Robert

Title of Invention:
Method and apparatus for producing hydrogen and oxygen gas

Term of Patent:
Twenty years from 16 May 2008

Dated this 6th day of March 2014

Celia Poole
Commissioner of Patents

PATENTS ACT 1990

Other LENR Patents

Presented and discussed by David J. French at: http://coldfusionnow.org/patents/
Also see Patent listing in Chapter 20 above.

Louis DeChiaro of US Naval Sea Systems Command (NAVSEA) on Replicating Pons and Fleischmann

- By Frank Acland *{highlights by Ozzie}*
- Published: October 6, 2015 – download from http://www.e-catworld.com/2015/10/06/louis-dechario-of-us-naval-sea-systems-command-navsea-on-replicating-pons-and-fleischmann/

> ***"Thanks to Adrian Ashfield for sharing this information with me who tells me this information comes from the research notes of Louis F. DeChiaro, Ph.D, a physicist with the US Naval Sea Systems Command (NAVSEA), Dahlgren Warfare Center. I am told this text has been cleared for public dissemination."***

As for duplicating the Pons and Fleischmann results, we now have a much better understanding of the phenomenon, and the list of prerequisite conditions is rather lengthy. Failure to meet even one of those conditions results in zero excess energy output. The data suggest that there may be more than one initiation mechanism, so I'm most qualified to comment upon what is known as the ***atomic vibrational LENR initiation mechanism*** (because my formal background is in Condensed Matter Physics). If one had to summarize the list in a fairly brief manner, I would write it as follows:

1) It is necessary to set up conditions favoring the formation of molecular hydrogen (H_2 or D_2) inside the solid lattice for a certain range of possible values of lattice constant and for some fraction of the allowed values for electron momentum. This condition alone rules out almost ALL the elemental, because the electron density is just too large to permit molecules to form, except near vacancies in the lattice where a metal atom is absent.

2) The overall hydrogen loading fraction (ratio of hydrogen to palladium atoms, for example) must exceed the minimum threshold of about 0.88; otherwise the "party" never even gets started. Achieving this level of loading in Pd [Palladium] is not trivial.

3) Conditions must be set up (by appropriate choice of materials parameters and achieved by the right kind of alloying) so that these hydrogen molecules can be caused to break up and then re-assemble very rapidly in a periodic time sequence when an appropriate physical quantity such as background electric charge, magnetic field, etc. is made to oscillate periodically over a small range.

4) The critical value of lattice constant at which this break up and reassembly occurs must lie very close to the nominal value of lattice constant for which the ground state energy of the lattice is minimal. This requirement alone rules out essentially all of the elemental lattices and about 99% of the binary and ternary alloys.

5) A departure from equilibrium must be established that will permit an external energy source (e.g. the DC power supply in an electrolysis experiment and/or a pair of low power lasers as in the Letts/Hagelstein two laser experiment) to feed energy into the H-H or D-D stretching mode vibrations. The difference in chemical potential that is established in gas loading experiments can also serve very nicely; in this case the flux feeds energy into the stretching mode vibrations.

6) The nature of the lattice must permit these stretching mode vibrations to grow so large (over a period of perhaps many nanoseconds) that their amplitude becomes comparable to the lattice constant. When this occurs, the H atoms oscillate so violently that at the instants of closest approach, the curvature of the parabolic energy wells in which the atomic nuclei vibrate will become perturbed. Thus the curvature of the well oscillates as a periodic function of time. These very large amplitude vibrations are known as superoscillations in the Western literature and as

"discrete breathers" in the Ukrainian literature. Under the right conditions, these oscillations can grow without impacting the atoms, which are much more massive than the hydrogens. We explored this computationally via Density Functional Molecular Dynamics runs.

7) When the curvatures of the parabolic energy wells of the nuclei are modulated at a frequency very near the natural resonant frequency, the quantum expectation value of the nuclear wave function spatial spread will oscillate with time in such a way that the positive-going peaks grow exponentially with time. Originally, I found this idea in the Ukrainian literature and was skeptical. So, we verified it by doing a direct numerical solution of the time-dependent Schrodinger Equation for a single nuclear particle in a parabolic energy well. These oscillations in spatial spread will periodically delocalize the nucleus and facilitate the tunneling of adjacent nuclei into the Strong Force attractive nuclear potential well, giving rise to nuclear fusion at rates that are several tens of orders of magnitude larger than what one calculates via the usual Gamow Factor integral relationship.

Almost none of this material was obvious back in 1989. Without knowing what one is doing and why it works, the probability of achieving successful results via the so-called Edisonian method of trial and error is disappointingly low. Reasonable scientists and engineers can be forgiven for their difficulty in believing that there might exist ANY circumstances under which such things could be possible. And to be blunt, it was only in the last few months that the causal chain finally became clear.

An old saying holds that it is easy to appear tall when standing on the shoulders of giants. My colleagues and I are most humbly grateful to have been given the opportunity to stand on the shoulders of such giants, however briefly.

I would also suggest that some ***praise might be due to people like Andrea Rossi,*** who (by and large) had little alternative but to employ the Edisonian method and nevertheless appear to have obtained positive results. We have run materials simulations (also known as Density Functional Theory simulations) on our best guess of Rossi's alloy material. It satisfies all the conditions given above, while pure Nickel does not.

In like manner, the Naval Research Labs (NRL) ran over 300 experiments using pure Pd cathodes, all of them yielding negative results. Then somebody suggested that NRL should try an alloy of 90% Pd and 10% Rh [Rhodium]. The very first such alloy cathode they tried yielded over 10,000 Joules of excess thermal energy – all from less than 1 gram of cathode material. I ran Density Functional Theory simulations on that alloy, and it, too, satisfies all the conditions given above, while pure Pd and pure Rh do not.

NRL christened this cathode with the name Eve, after the obvious Biblical analogy. I'm pleased to share the news that Eve had a number of "sisters" who produced equal and even greater excess thermal energy, among a number of other more interesting effects. Finally, I can observe that the materials simulations now make it fairly easy to evaluate any given solid lattice material and estimate its level of LENR activity. We have good correlations between the simulation results and the known levels of experimentally-determined LENR activity in a number of different alloys whose dominant elements come from the Transition Metal Group of the Periodic Table. Hopefully, we will be able to get all the details of this material released for publication to the general public over the next few weeks.

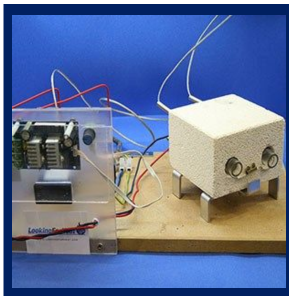

LENR Peer Reviewed Papers

Source of list: ***Brillouin Energy Corporation***, www.brillouinenergy.com

---

1. **Preface**
by M. Srinivasan, A. Meulenberg
http://brillouinenergy.com/wp-content/uploads/2015/07/Preface.pdf

2. **Title: "Cold fusion: comments on the state of scientific proof"**
Author: Michael C.H. McKubre
http://brillouinenergy.com/wp-content/uploads/2015/07/Cold-fusion-comments-on-the-state-of-scientific-proof.pdf

3. **Title: "Selective resonant tunneling – turn the hydrogen-storage material into energetic material"**
Authors: C.L. Liang, Z.M. Dong, X.Z. Li
http://brillouinenergy.com/wp-content/uploads/2015/07/Selective-resonant-tunnelling---turning-hydrogen-storage-material-into-energetic-material.pdf

4. **Title: "Highly reproducible LENR experiments using dual laser stimulation"**
Author: Dennis Letts
http://brillouinenergy.com/wp-content/uploads/2015/07/Highly-reproducible-LENR-experiments-using-dual-laser-stimulation.pdf

5. **Title: "Condensed matter nuclear reaction products observed in Pd/D co-deposition experiments"**
Authors: P.A. Mosier-Boss, L.P. Forsley, F.E. Gordon, D. Letts, D. Cravens, M.H. Miles, M. Swartz, J. Dash, F. Tanzella, P. Hagelstein, M. McKubre, J. Bao
http://brillouinenergy.com/wp-content/uploads/2015/07/Condensed-matter-nuclear-reaction-products-observed-in-PdD-co-deposition-experiments.pdf

6. **Title: "Use of CR-39 detectors to determine the branching ratio in Pd/D co-deposition"**
Authors: P.A. Mosier-Boss, L.P. Forsley, A.S. Roussetski, A.G. Lipson, F. Tanzella, E.I. Saunin, M. McKubre, B. Earle, D. Zhou
http://brillouinenergy.com/wp-content/uploads/2015/07/Use-of-CR-39-detectors-to-determine-the-branching-ratio-in-PdD-co-deposition.pdf

7. **Title: "Transmutation reactions induced Authors: deuterium permeation through nano-structured palladium multilayer thin film"**
Authors: Yasuhiro Iwamura, Takehiko Itoh, Shigenori Tsuruga
http://brillouinenergy.com/wp-content/uploads/2015/07/Transmutation-reactions-induced-by-deuterium-permeation.pdf

8. **Title: "Biological transmutations"**
Author: Jean-Paul Biberian
http://brillouinenergy.com/wp-content/uploads/2015/07/Biological-transmutations.pdf

9. **Title: "Microbial transmutation of Cs-137, LENR in growing biological systems"**
Authors: V.I. Vysotskii, A.A. Kornilova
http://brillouinenergy.com/wp-content/uploads/2015/07/Microbial-transmutation-of-Cs-137-and-LENR-in-growing-biological-systems.pdf

10. **Title: "Energy gains from lattice-enabled nuclear reactions"**
Author: David J. Nagel
http://brillouinenergy.com/wp-content/uploads/2015/07/Energy-gains-from-lattice-enabled-nuclear-reactions.pdf

11. **Title: "Summary report: 'Introduction to Cold Fusion' – IAP course at the Massachusetts Institute of Technology"**
Authors: Gayle Verner, Mitchell Swartz, Peter Hagelstein,
http://www.currentscience.ac.in/Volumes/108/04/0653.pdf

12. **Title: "Condensed matter nuclear science research status in China"**
Authors: Z.M. Dong, C.L. Liang, X.Z. Li
http://www.currentscience.ac.in/Volumes/108/04/0594.pdf

13. **Title: "Extensions to physics: what cold fusion teaches"**
Author: A. Meulenberg
http://brillouinenergy.com/wp-content/uploads/2015/07/Extensions-to-physics-what-cold-fusion-teaches.pdf

14. **Title: "Phonon models for anomalies in condensed matter nuclear science**"
Authors: Peter L. Hagelstein, Irfan U. Chaudhary
http://brillouinenergy.com/wp-content/uploads/2015/07/Phonon-models-for-anomalies.pdf

15. **Title: "Development status of condensed cluster fusion theory"**
Author: Akito Takahashi
http://brillouinenergy.com/wp-content/uploads/2015/07/Development-status-of-condensed-cluster-fusion-theory.pdf

16. **Title: "Model of low energy nuclear reactions in a solid matrix with defects"**
Author: K.P. Sinha
http://brillouinenergy.com/wp-content/uploads/2015/07/Model-of-low-energy-nuclear-reactions-in-a-solid-matrix-with-defects.pdf

17. **Title: "Coherent correlated states of interacting particles – the possible key to paradoxes and features of LENR"**
Authors: Vladimir I. Vysotskii, Mykhaylo V. Vysotskyy
http://brillouinenergy.com/wp-content/uploads/2015/07/Coherent-correlated-states-of-interacting-particles-%E2%80%93-the-possible-key-to-paradoxes-and-features-of-LENR.pdf

18. **Title: "Sidney Kimmel Institute for Nuclear Renaissance"**
Authors: G.K. Hubler, A. El-Boher, O. Azizi, D. Pease, J.H. He, W. Isaacson, S. Gangopadhyay, V. Violante
http://brillouinenergy.com/wp-content/uploads/2015/07/Sidney-Kimmel-Institute-for-Nuclear-Renaissance.pdf

19. **Title: "Progress towards understanding anomalous heat effect in metal deuterides"**
Authors: O. Azizi, A. El-Boher, J.H. He, G.K. Hubler, D. Pease, W. Isaacson, V. Violante, S. Gangopadhyay
http://brillouinenergy.com/wp-content/uploads/2015/07/Progress-Towards-108_04_0565_0573_0.pdfhttp://brillouinenergy.com/wp-content/uploads/2015/07/Progress-Towards-108_04_0565_0573_0.pdf

20. **Title: "Review of materials science for studying the Fleischmann and Pons effect"**
Authors: V. Violante, E. Castagna, S. Lecci, F. Sarto, M. Sansovini, A. Torre, A. La Gatta, R. Duncan, G. Hubler, A. El Boher, O. Aziz, D. Pease, D. Knies, M. McKubre
http://brillouinenergy.com/wp-content/uploads/2015/07/Review-of-materials-science-for-studying-the-Fleischmann-and-Pons-effect.pdf

21. **Title: "Observation of radio frequency emissions from electrochemical loading experiments"**
by D.A. Kidwell, D.D. Dominguez, K.S. Grabowski, L.F. DeChiaro Jr.
http://brillouinenergy.com/wp-content/uploads/2015/07/Observation-of-radio-frequency.pdf

22. **Title: "Brief summary of latest experimental results with a mass-flow calorimetry system for anomalous heat effect of nano-composite metals under D(H)-gas charging"**
Authors: A. Kitamura, A. Takahashi, R. Seto, Y. Fujita, A. Taniike, Y. Furuyama
http://brillouinenergy.com/wp-content/uploads/2015/07/Brief-summary-of-experimental-results.pdf

23. **Title: "Condensed matter nuclear reactions with metal particles in gases"**
Authors: Dennis Cravens, Mitchell Swartz, Brian Ahern
http://brillouinenergy.com/wp-content/uploads/2015/07/Condensed-matter-nuclear-reactions-with-metal-particles-in-gases.pdf

24. **Title: "Dry, preloaded NANOR®-type CF/LANR components"**
Authors: Mitchell Swartz, Gayle Verner, Jeffrey Tolleson, Peter Hagelstein
http://brillouinenergy.com/wp-content/uploads/2015/07/Dry-preloaded-NANOR%C2%AE-type-CFLANR-components.pdf

25. **Title: "Directional X-ray and gamma emission in experiments in condensed matter nuclear science"**
Author: Peter L. Hagelstein
http://brillouinenergy.com/wp-content/uploads/2015/07/Directional-X-ray-and-gamma-emission-in-experiments-in-condensed-matter-nuclear-science.pdf

26. **Title: "Observation of neutrons and tritium in the early BARC cold fusion experiments"**
Author: Mahadeva Srinivasan
http://brillouinenergy.com/wp-content/uploads/2015/07/Observation-of-neutrons-and-tritium-in-the-early-BARC-cold-fusion-experiments.pdf

27. **Title: "Introduction to isotopic shifts and transmutations observed in LENR experiments"**
Author: Mahadeva Srinivasan
http://brillouinenergy.com/wp-content/uploads/2015/07/Introduction-to-isotopic-shifts-and-transmutations-observed-in-LENR-experiments.pdf

28. **Title: "Status of cold fusion research in Japan"**
Author: Akira Kitamura
http://brillouinenergy.com/wp-content/uploads/2015/07/Status-of-cold-fusion-research-in-Japan.pdf

LENR Not Dying Off – but Heating Up (IMHO)

For fresh of news on the subject, Google LENR News 2017 (or whatever year is now) and you will see it -- the scene of LENR, now realized to be neither fusion nor fission but a ***third*** type of nuclear energy source, is speeding up and is attracting both supporters and haters. And haters is always a sign that's you're getting close to a big thing, something to envy. Here's what I found on 9 May 2017, on my Google (from Hong Kong):

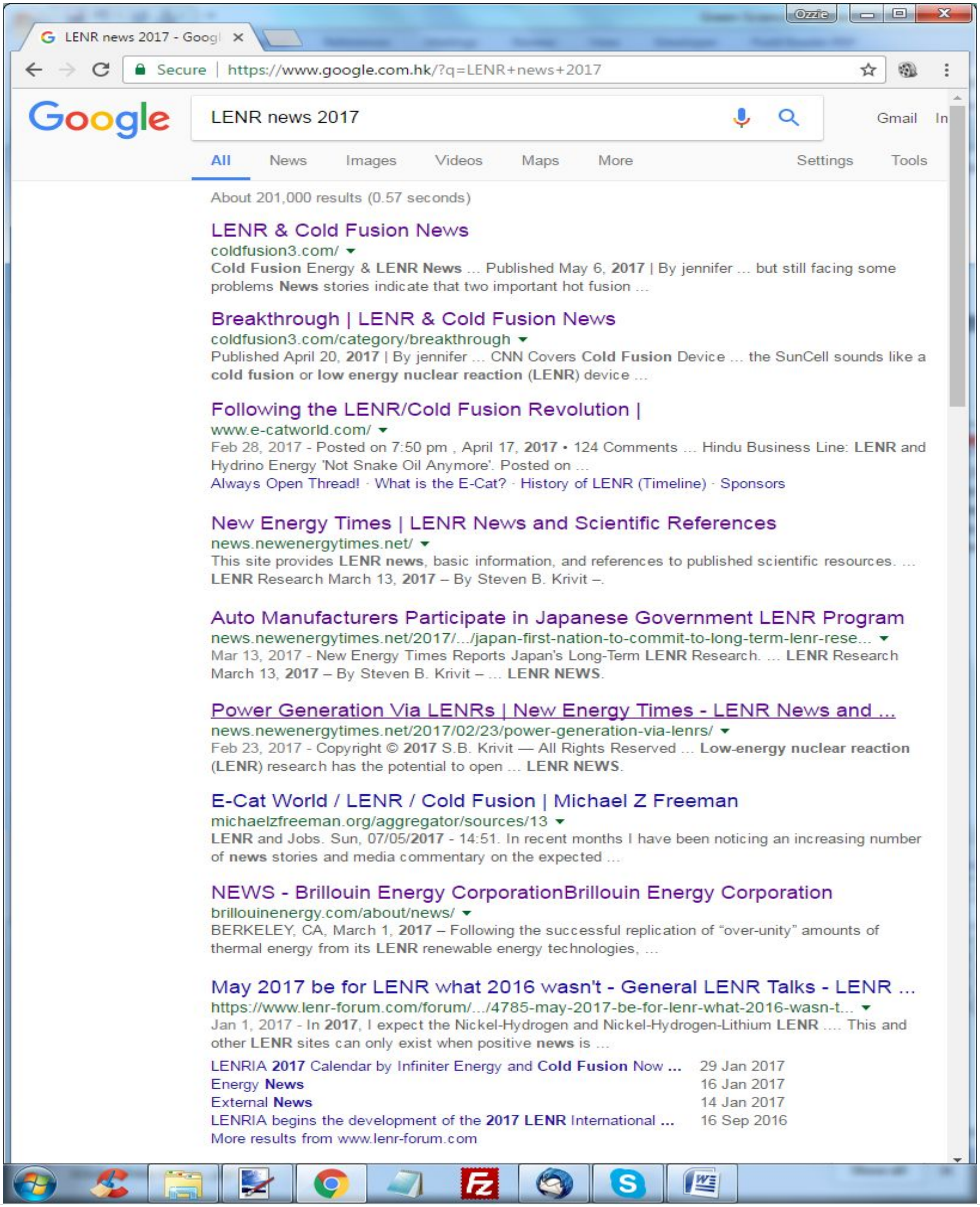

About 201,000 results (0.57 seconds)

LENR & Cold Fusion News
coldfusion3.com/
Cold Fusion Energy & **LENR News** ... Published May 6, **2017** | By jennifer ... but still facing some problems **News** stories indicate that two important hot fusion ...

Breakthrough | LENR & Cold Fusion News
coldfusion3.com/category/breakthrough
Published April 20, **2017** | By jennifer ... CNN Covers **Cold Fusion** Device ... the SunCell sounds like a **cold fusion** or **low energy nuclear reaction** (**LENR**) device ...

Following the LENR/Cold Fusion Revolution |
www.e-catworld.com/
Feb 28, 2017 - Posted on 7:50 pm , April 17, **2017** • 124 Comments ... Hindu Business Line: **LENR** and Hydrino Energy 'Not Snake Oil Anymore'. Posted on ...
Always Open Thread! · What is the E-Cat? · History of LENR (Timeline) · Sponsors

New Energy Times | LENR News and Scientific References
news.newenergytimes.net/
This site provides **LENR news**, basic information, and references to published scientific resources. ... **LENR** Research March 13, **2017** – By Steven B. Krivit –.

Auto Manufacturers Participate in Japanese Government LENR Program
news.newenergytimes.net/2017/.../japan-first-nation-to-commit-to-long-term-lenr-rese...
Mar 13, 2017 - New Energy Times Reports Japan's Long-Term **LENR** Research. ... **LENR** Research March 13, **2017** – By Steven B. Krivit – ... **LENR NEWS**.

Power Generation Via LENRs | New Energy Times - LENR News and ...
news.newenergytimes.net/2017/02/23/power-generation-via-lenrs/
Feb 23, 2017 - Copyright © **2017** S.B. Krivit — All Rights Reserved ... **Low-energy nuclear reaction** (**LENR**) research has the potential to open ... **LENR NEWS**.

E-Cat World / LENR / Cold Fusion | Michael Z Freeman
michaelzfreeman.org/aggregator/sources/13
LENR and Jobs. Sun, 07/05/**2017** - 14:51. In recent months I have been noticing an increasing number of **news** stories and media commentary on the expected ...

NEWS - Brillouin Energy CorporationBrillouin Energy Corporation
brillouinenergy.com/about/news/
BERKELEY, CA, March 1, **2017** – Following the successful replication of "over-unity" amounts of thermal energy from its **LENR** renewable energy technologies, ...

May 2017 be for LENR what 2016 wasn't - General LENR Talks - LENR ...
https://www.lenr-forum.com/forum/.../4785-may-2017-be-for-lenr-what-2016-wasn-t...
Jan 1, 2017 - In **2017**, I expect the Nickel-Hydrogen and Nickel-Hydrogen-Lithium **LENR** .... This and other **LENR** sites can only exist when positive **news** is ...

LENRIA **2017** Calendar by Infiniter Energy and **Cold Fusion** Now ...	29 Jan 2017
Energy **News**	16 Jan 2017
External **News**	14 Jan 2017
LENRIA begins the development of the **2017 LENR** International ...	16 Sep 2016

More results from www.lenr-forum.com

Chapter 29.
EMERGING: BlackLight — Free-Energy from Hydrinos?

"Hydrinos" are particles explained on the next page.

In (very) short: BlackLight Power generates ***from tiny amounts of water*** more than 200 times the energy of burning hydrogen. This leaves more than enough energy to extract the necessary hydrogen from water by electrolysis. According to one source, and common sense, the little water needed can even be extracted from the humidity in the air... No fossil fuel involved – ***the only fuel used here is water,*** and the excess energy can be harnessed to replace the thermal power in coal, oil, gas and nuclear power plants.

What is BlackLight?

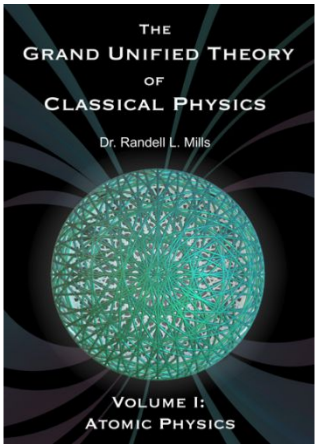

BlackLight Power, Inc. is a company out of Cranbury, New Jersey. BlackLight Power has been founded by Dr. Randell Lee Mills, who seems to have discovered a new energy source. The purported energy source is based on Mills' assertion that the electron in a hydrogen atom can drop below the lowest energy state known as the 'ground state.'

Mills calls the theoretical hydrogen atoms that are in an energy state below ground level, "hydrinos." Mills self-published a closely related book titled *'The Grand Unified Theory of Classical Physics'* and some scientists say it is inconsistent with quantum mechanics. I downloaded his book http://brilliantlightpower.com/book-download-and-streaming/ and it is indeed revolutionary in its theories and approach. Little (but expanding) agreement in the scientific world can be found with Mills' theories.

Mills' process is not void of validation:

In 1996 ***NASA*** released a report describing experiments using a BlackLight Power electrolytic cell. Although not recreating the large heat gains reported for the cell by the company, unexplained power gains ranging from 1.06 to 1.68 of the input power were reported: "...admit the existence of an ***unusual source of heat*** with the cell." NASA researchers proposed the recombination of hydrogen and oxygen as a possible explanation of the anomalous results. [Reference: "Replication of the apparent excess heat effect in light water-potassium carbonate-nickel-electrolytic cell" - download from NASA: http://www.grc.nasa.gov/WWW/sensors/PhySen/docs/TM-107167.pdf]

In 2002 the NASA Institute for Advanced Concepts (NIAC) granted a Phase-I grant (study of feasibility and potential) to Anthony Marchese, a mechanical engineer at ***Rowan University*** (NJ) to study a possible rocket propulsion that would use hydrinos. Rowan Professors Peter Jansson, Kandalam Ramanujachary & Amos Mugweru, as well as Dr. Alexander Bykanov & Dr. Sam Kogan (***Harvard***) have also verified the technology.

Find the latest independent validations of Dr. Mills' technology:
http://brilliantlightpower.com/validation-reports/

What are Hydrinos?

Hydrino, per BlackLight's definition: ***a new form of hydrogen*** theoretically predicted by Dr. Mills, then produced and characterized by BlackLight Power. Hydrinos are produced as energy is released from the hydrogen atom (inexpensively extracted from water) as the electron transitions to a lower-energy state, resulting in ***a smaller radius hydrogen atom***. Dr. Mills says that the identity of the dark matter of the universe as hydrinos is supported by his spectroscopic and analytical results as well as astrophysical observations.

The theory that hydrogen could be "shrunk" to form hydrinos was first described in 1986. Hydrogen is the first element in the periodic table – so how can its atoms be made smaller?

Mills' mechanism consists of a non-radiative energy transfer between a hydrogen atom and a catalyst that is capable of absorbing a certain amount of energy. At large, the total energy released by hydrino transitions is ***larger than the chemical burning of hydrogen, but less than nuclear reactions***.

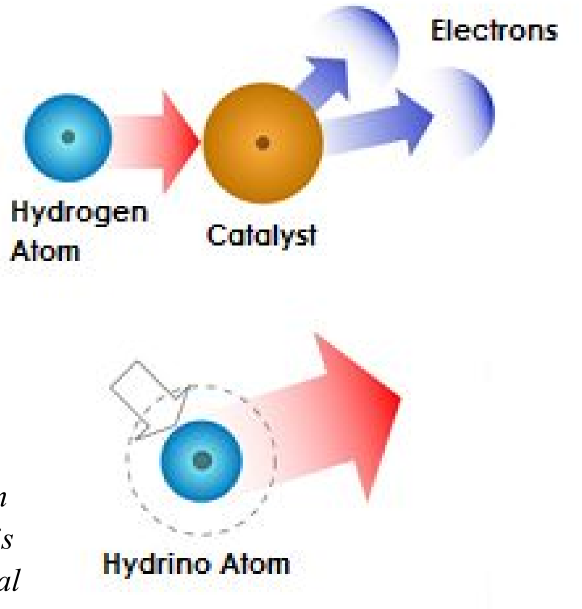

Image source: Blacklight Power Inc.

This image is explained by Len Rosen: "*When water vapor consisting of hydrogen and oxygen is exposed to a catalytic ion it undergoes a chemical reaction that transforms the hydrogen to a* ***lower energy state*** *and* ***releases energy*** *to the surroundings in the form of electricity or heat. The lower energy atomic hydrogen is called a hydrino.*"
[Source: http://www.21stcentech.com/energy-update-electrical-power-water-vapor/]

Overview by Ken Rauen[189] (edited)

Blacklight Power, Inc., and its founder, Randy Mills, have a new energy process based on the formation of a shrunken form of hydrogen, where the particle is called "hydrino." Hydrogen normally exists in a ground state (the state of minimum energy under normal circumstances) that Quantum Mechanics calls the N=1 state.

Allowed energy states of an atom fit integer values of 1, 2, 3, 4, and so on; that is the significance of the word "quantum." The higher the number, the higher the energy state. When an atom at a high energy state (also called an excited state) falls to a lower level, energy is released. This usually occurs as a photon of light. The observed line spectra emissions of atoms correspond to these transitions.

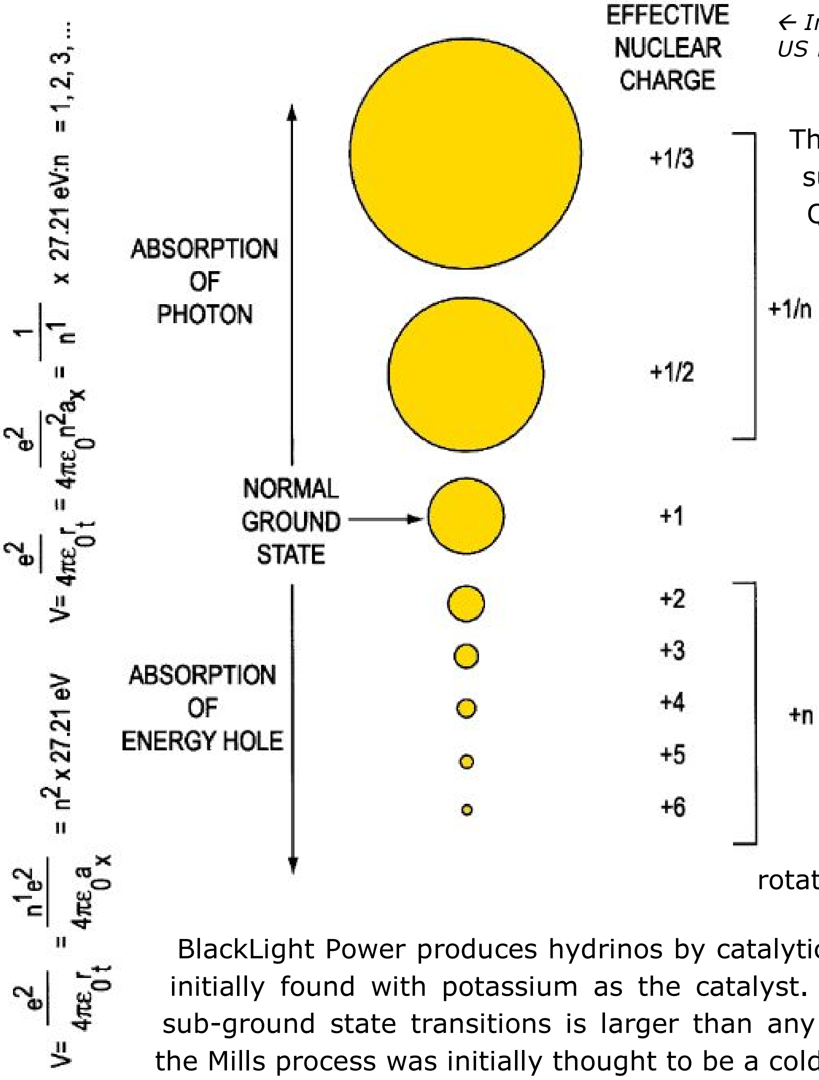

← *Image: Fig. 2 from Mills' US Patent № 6,024,935*

The ultraviolet line spectra of the sun are unexplained by classical Quantum Mechanics. To explain the ultraviolet spectrum of the sun from hydrogen (the primary constituent of the sun), Mills proposed fractional quantum states, 1/2, 1/3, 1/4, 1/5, and so on.

These energy transitions fit the ultraviolet spectrum of the sun, hence the name, BlackLight Power. Since sub-quantum atoms are non-radiative, they are an explanation for "dark matter" that keeps galaxies together by gravity and not flying apart at the high rotational speeds of many galaxies.

BlackLight Power produces hydrinos by catalytic thermal processes in plasma, initially found with potassium as the catalyst. The energy released in these sub-ground state transitions is larger than any known chemical reaction and the Mills process was initially thought to be a cold fusion phenomenon.

---

[189] Director of Research and Development at PES Network, and an inventor in his own right (US Patent № 6,698,200 B1)

The energy level is not as great as nuclear reactions; it is intermediate to nuclear and chemical reaction energies. It is in a category by itself.

Overview

The BlackLight system is based on a new type of reaction, relying on classical physical laws. It treats electrons as real, solving the problem of what the electron is, and how to achieve ***a more stable form of the hydrogen atom***. Mills said that no one has put the effort in the past 80 years in solving what the electron is. By doing so you find out it predicts why it's stable, and how you can have more stable states of the hydrogen atom – which is what "dark matter" is comprised of.

So the products of their reaction are oxygen and the hydrino, which is a more stable form of the hydrogen, and doesn't react with anything. It is totally inert (dark matter).

The process uses water as the primary fuel, but uses only a tiny amount, as it goes into a plasma state then directly to electricity – "ten million times more energy dense than fire." 10^{10} Watts per Liter of water. To put that in perspective, the entire U.S. grid is 600,000,000,000 watts, or 6 x 10^{11} Watts.

While the reaction has a high power density, it doesn't have a possibility of running away. ***It is very safe.***

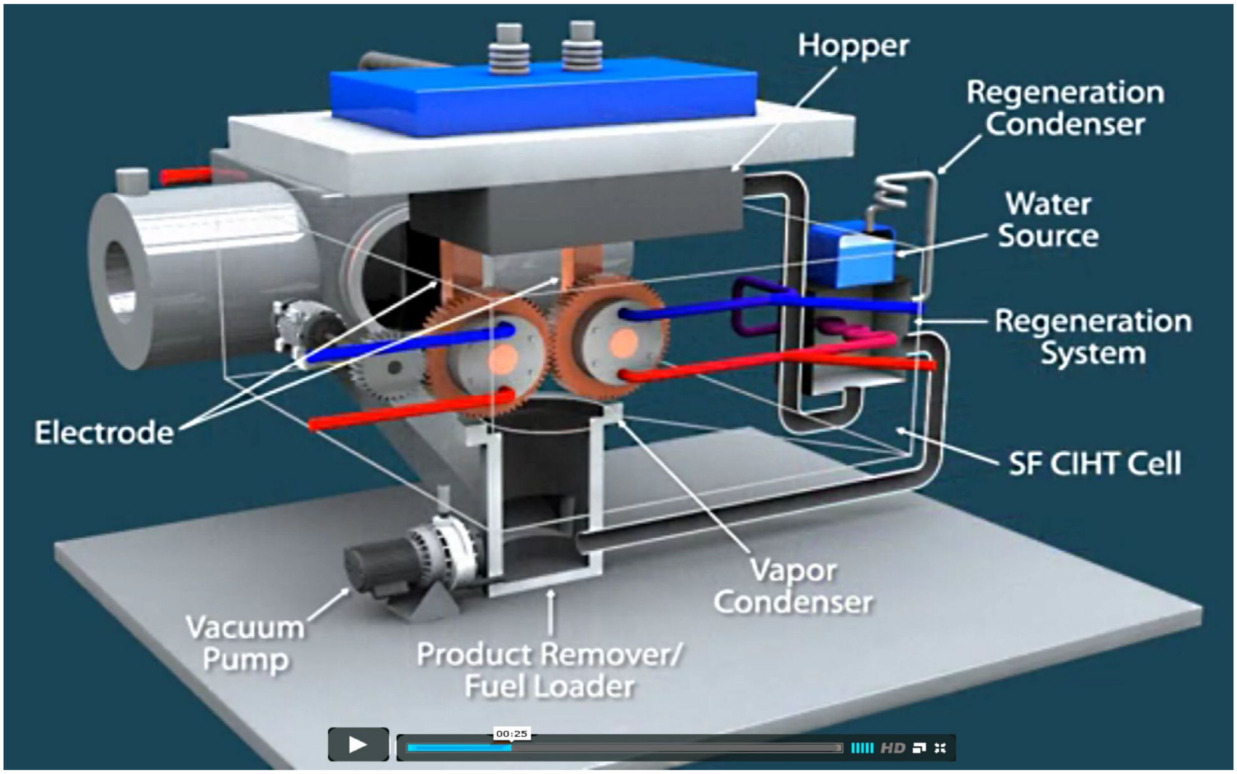

Screenshot from 10 MW Generator video on Blacklight Power's website www.blacklightpower.com

Randy Mills described the main components of the 10 MW system. The reaction area is comprised of the water fuel entering a volume that is triangular in shape between interdigitating gears. The volume is about 2 mm thick by 4 mm, and 1 cm wide (the thickness of the gears). That would be enough fuel to give you 10 kilo-Joules of energy.

The 60-toothed gears rotate at 200 rpm, at about a millisecond time scale per reaction. So at a rate of 10 kJ per tooth, it gives 10 MW of power continuously, at an efficiency of 90% conversion rate.

The water fuel, energized by two electrodes, creates a supersonic-expanding plasma, that goes into magnetohydrodynamic converter (a known science), which converts that plasma directly into electricity. "It's a technology that basically has been looking for an application, same as what we saw with the laser. Our application is perfect for it, with supersonic expanding plasma with 10 million times the power density of fire."

The 10 MW device they are building is actually smaller than a square foot. It's just 9 inches on each side. Scaling it up and down will actually essentially just entail speeding up or slowing down the rotation speed of the 60-toothed gears. Faster will give more power, slower will give less.

The potential

Len Rosen: *"The potential of the energy yield of a single CIHT[190] cell could operate a standard mid-sized automobile for 5,000 kilometers (approximately 3,000 miles) on a liter of water (0.26 U.S. gallons)."* [Source: www.21stcentech.com/energy-update-electrical-power-water-vapor/]

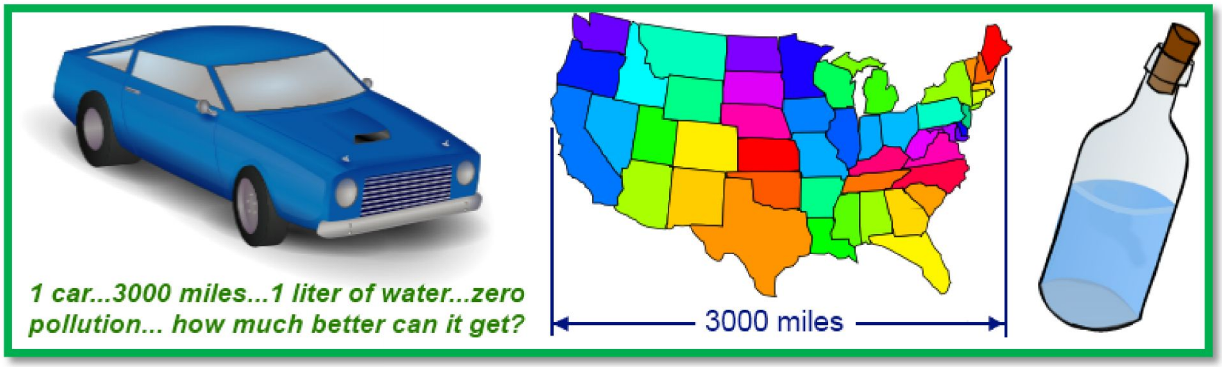

Further Study

- ***COMPLETE THEORY: books and presentations*** by Dr. Randell L. Mills: http://brilliantlightpower.com/book-download-and-streaming/
- www.21stcentech.com/energy-update-electrical-power-water-vapor/
- www.rexresearch.com/millshyd/9210838.htm

---

[190] Catalyst Induced Hydrino Transition – BlackLight's proprietary technology.

Link Between Hydrinos ←→ Brown's Gas

Document Title: "Explanation of Anomalous Combustion of Brown's Gas Using Dr. Mills' Hydrino Theory"

- Published: 28 September, 1999, by SAE[191]
- SAE Technical Paper: 1999-01-3325
- DOI: 10.4271/1999-01-3325
- Author: *Hiroshi Ymamoto;* ***Yamaha Motor Co. Ltd.*** Shizuoka, Japan
- From the proceedings of Small Engine Technology Conference and Exposition, held in Madison, Wisconsin (USA) between September 28÷30, 1999

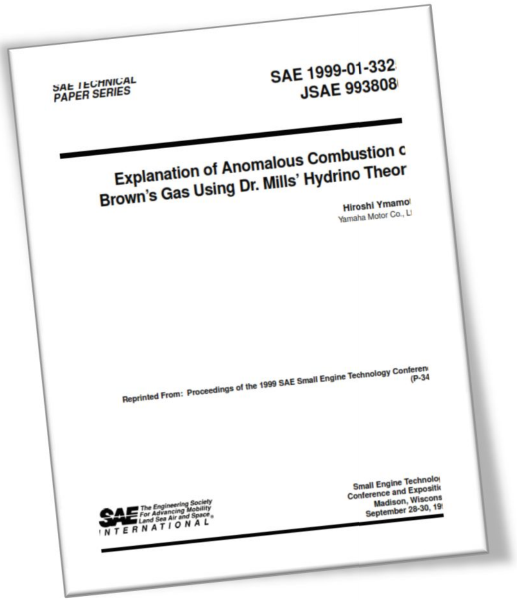

SAE TECHNICAL
PAPER SERIES

SAE 1999-01-332
JSAE 993808

Explanation of Anomalous Combustion c
Brown's Gas Using Dr. Mills' Hydrino Theor

Hiroshi Ymamo
Yamaha Motor Co., L

Reprinted From: Proceedings of the 1999 SAE Small Engine Technology Conferen
(P-34

SAE The Engineering Society For Advancing Mobility Land Sea Air and Space INTERNATIONAL

Small Engine Technolo
Conference and Expositi
Madison, Wiscons
September 28-30, 19

ABSTRACT:

"There are several anomalous combustion phenomena that cannot be explained by current theories. One of them is the stoichiometric mixture of hydrogen and oxygen, known as Brown's gas.

"Dr. Randell Mills developed "hydrino" theory starting in 1986 that can explain excess heat in the absence of nuclear products in the research of cold fusion. It was applied to explain this anomalous combustion, by replacing potassium ion with atomic oxygen.

"It was found out that hydrino theory can explain this anomalous combustion phenomenon including abnormal heat generation from combustion of emulsified fuels.

"It was suggested that this technology can be utilized for the improvement of future internal combustion engines."

Download the complete SAE paper:

- ☐ http://papers.sae.org/1999-01-3325/
- ☐ http://www.ailab7.com/yamamoto1.pdf

---

[191] Society of Automotive Engineers

Chapter 30.
EMERGING: Paul Pantone's GEET Plasma Waterfuel Reactor

Overview

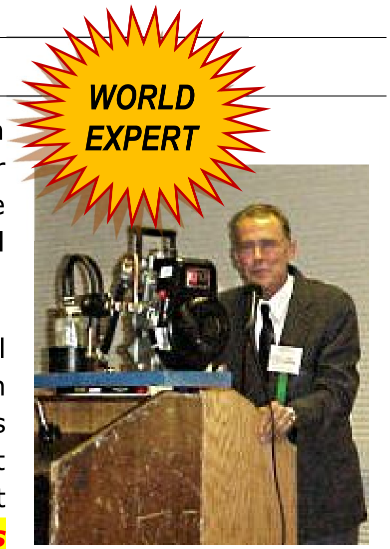

Photo: Exotic Research Magazine, April/May/June, 1996

This chapter is about a Waterfuel technology that has been with us for decades. The reason you see it here under "emerging" technologies is that only in recent years the technology world, the scientific community and even Waterfuel enthusiasts, are starting to absorb its validity and usefulness.

Paul Pantone (1950-2015) gave the world a whole Waterfuel sector without which this book will never be complete. When compared to other Waterfuel systems, its major advantage is sheer simplicity and extremely low costs (you can do it yourself with $25 of "plumbing materials" and get benefits that compare to expensive systems in the $1000's range). ***This advantage also makes it one of the most disruptive Waterfuel technologies – hence the most feared*** by those who have vested interests in wasting fossil fuels, keeping the environment dirty while selling expensive machines.

It was reported that the process has been studied and confirmed by Brigham Young University. Since it's been suppressed in the USA by forbidding its use on public roads, its use for farm equipment has proliferated in Europe: France, Belgium, Netherlands, Russia, etc. Despite the inventor's departure a few months ago, our understanding of GEET has just begun.

Definition

The word GEET is an acronym (and registered trademark) for Global Environmental Energy Technology, but that doesn't even start to define it in technical terms. We can see it as a water-to-energy as well as a waste-to-energy system to be used as an upgrade to our old friend (well, once we upgrade it) – the internal combustion engine. The GEET process achieves a plasma state at a much lower temperatures, allowing the engine to run on all kinds of "crazy" fuels, including tap water, salt water, urine, coke/juice/soda, waste oil, windows cleaner, battery acid – you name it. All of these are turned into the same end product — a synthetic gas that's then used as fuel in the engine. To tell you the truth, this is not a good definition because schoolbook science is out of words for this kind of technology, so please go ahead and read the 'GEET Theory' section below.

References

Unlike other chapters I'd like to start this one with a list of important links concerning the technology, its many validations, products, books, plans – and even where you can get professional training for this unique Waterfuel technology:

- US Patent № 5,794,601 "Fuel Pretreater Apparatus and Method" was granted to Paul Pantone in August 18, 1998: www.google.com/patents/US5794601 -- approved by Patent Examiner Marguerite McMahon (USA Patent Office).

- References given in the official Patent:
    - PCT Publication No. WO 96/14501--May 17, 1996.
    - Marin Independent Journal, Nov. 1992 "In quest of perfect engine".
    - Exotic Research Report, vol. 1 #2 April-June 1996, pp. 23-26.

- Free plans: http://www.teslatech.info/ttstore/articles/geet/geet.htm
- Video Gallery: http://rebuilding.geetinternational.com/videos/ - tests, interviews, media coverage. Also Will P. Wilson (AllDayLive): https://youtu.be/fCc_NUknIak
- Important video: https://youtu.be/2a5nx9Y1Psg - during the 2010 Tesla Conference, the co-hosts of "Ultimate Energy Showdown" Matt Baird and Carter Reedy meet Paul Pantone, verify extraordinary heat phenomena and clean exhaust in a GEET demo.
- GEET in Australia:
    - 2-hour GEET presentation: https://youtu.be/i-2NQQFh31k
    - Tivon Rivers interviews Dan Easton, Head Technical Advisor for all GEET teams worldwide: https://youtu.be/l6_fsAtVlqQ
- Interviews with Adam Abraham:
    - https://youtu.be/XqHV6-j3ego
    - https://youtu.be/ygMGj9N4ieI - clips from the film 'Indelible Promise'
    - https://youtu.be/D3HHThgm6nY- clips from the film 'Indelible Promise'
    - The full 3½-hour film: https://youtu.be/LTo_lhVx7OA
    - https://youtu.be/CCQ8PX8lMAU
- Much exposure of GEET in French media: http://quanthommesuite.pagesperso-orange.fr/pmcpresse.htm as well as www.econologie.com/forums/injection-eau-moteur-pantone/article-materiel-agricole-t1724.html
- Many replication articles were published (in French) by 'Econologie' – a portal where energy innovation and its economy meet ecology:
    - www.econologie.com/injection-eau-moteur/injection-eau-gillier-pantone/
    - www.econologie.com/injection-eau-moteur/moteur-pantone/
- Official and independent GEET websites:
    - http://GEETInternational.com
    - http://www.geetfriends.net
    - www.panacea-bocaf.org/geet.htm
    - http://quanthomme.free.fr/pantone.htm (in French; also Google for GEET sources in Russian, German, Dutch, Spanish and other languages)
- Grant Sheehan simplifies GEET explanation: https://youtu.be/K1mnfp1tDAY

How the invention was conceived

(as much as I know)

The GEET was patented by Pantone in 1998. According to Panacea www.panacea-bocaf.org the research on this type of fuel reformer was started by French mechanical engineer Jean Pierre Marie Chambrin (International Patent App. № WO8204096, № WO8203249, both of 1981, and European EP0074352 in 1983; publicity in 'Le Point' Magazine), Marvin D. Martin of the University of Arizona and others around the world.

The legends tell that back in 1975 Paul Pantone met an unusual person (an Eastern sage – I'm throwing a wild guess) who eventually entrusted him with the basic plans for GEET (in Hindu 'Geet' means *melody* or *singing*). Pantone was commanded to always give a portion of whatever he made from it back to mankind. He then created the first working GEET engine in 1983.

In 1984, a local newspaper wrote a story about it – and the very next day he was warned that someone was about to erase his IRS records to try and frame him for tax evasion. From that day started a long story of framing, legal atrocities and suppression that ended on May 12, 2009 when he was finally released from the Utah State (Mental) Hospital thanks to relentless pressure from Paul's GEET friends worldwide. Pantone was incarcerated for three and a half years under the infamous abuse of psychiatric "hospitals" (torture asylums, actually).

Image source: YouTube.com

The story of suppression, persecution and torture: watch https://youtu.be/WuA-y6j35KQ and read http://www.geetfriends.net/persecution/persecution.htm

Due to endless efforts of his friends from around the world, this trail of suppression did not stop the invention, or Pantone, who continued to teach until his departure in 2015. Additionally, his GEET has become very popular with worldwide users, for instance French farmers and drivers using independent developments of the technology. The website www.geetinternational.com states that based on the hundreds of thousands of emails they've been receiving, they estimate "there are probably about 5000 vehicles world-wide running on GEET right now. Including cars, tractors, other farm equipment, and even a helicopter." For the sake of realistic expectations, let me say, it seems that getting GEET to work requires tedious study and hard work – not everybody who tried got it to work. That's why Pantone's students now teach classes and trains dealers, and I guess this story has just began.

Pantone's story as told by Adam Abraham:
https://phaelosopher.com/2015/12/17/paul-pantone-a-respected-heretic-remembered/

Products

Many products based on this invention are now available at:

- **www.HYPNOW.com** (English)
- **www.HYPNOW.fr** (French)
- **www.ECOPRA.com** (French)

Operating principle for Diesels

The ambient air is sucked into the bubbler to form humid air by passing through water. It goes through the Retrokit Nano Pro catalytic reactor, heated by contact by the exhaust gases. Once treated, this aerosol dopes the combustion being mixed with the intake air, via the diffuser placed between the air filter and the turbo (or intake in case of atmospheric engines). [Quote and image from http://www.hypnow.com/retrokit.html]

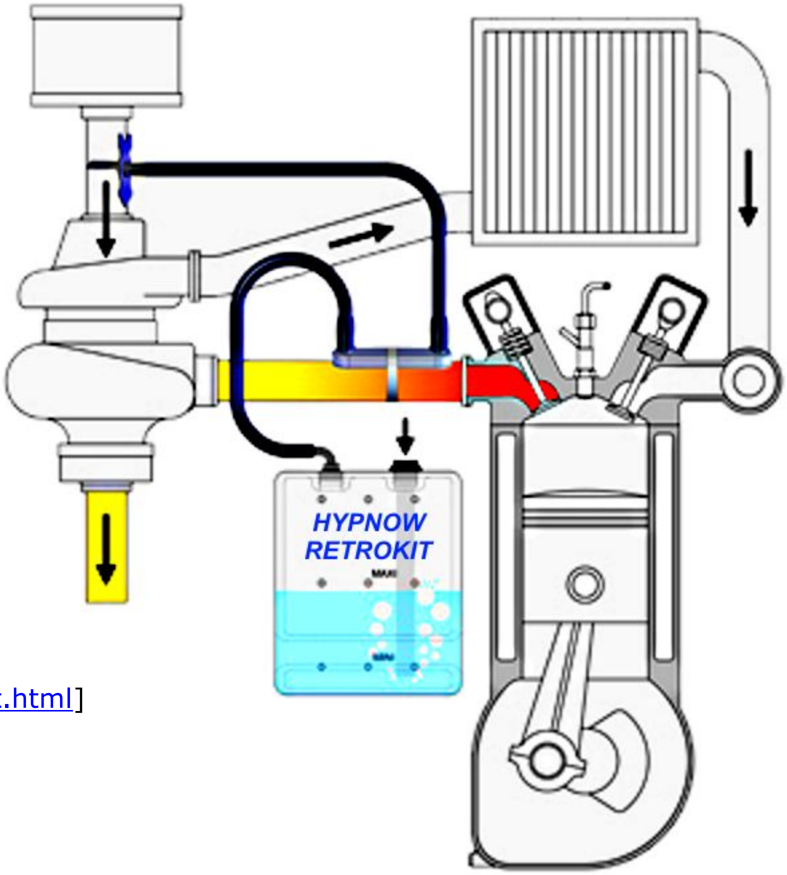

Free FEET Plans are not only free but *open source and royalty free* – Pantone's gift to Humanity

The drawing (next page) of Paul Pantone's original GEET invention was made by French Waterfuel researcher **Jean-Louis Naudin** http://jnaudin.free.fr

This is a greatly simplified "Proof of Concept" version of the GEET Fuel Processor that just about anyone can build from parts from a local hardware store in a weekend for very low cost. In the version shown, a used lawnmower engine is used ***for demonstration purposes*** so things will be easier to see without obstructions.

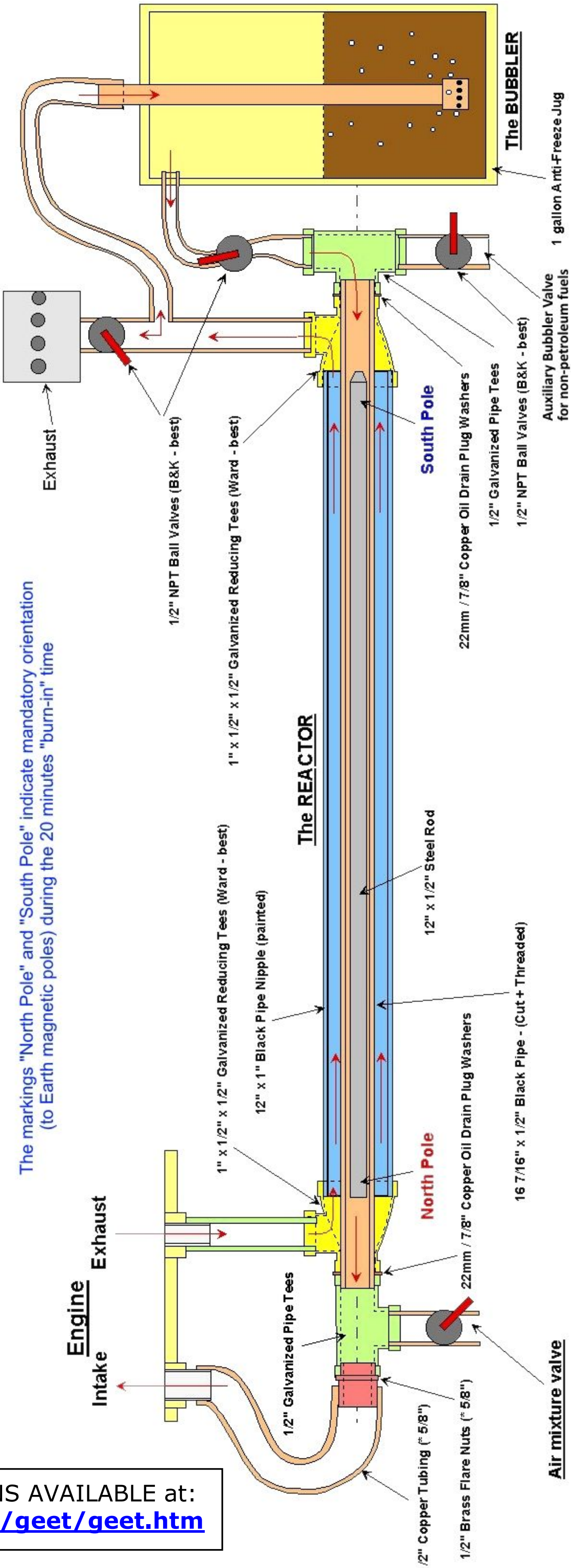

The markings "North Pole" and "South Pole" indicate mandatory orientation (to Earth magnetic poles) during the 20 minutes "burn-in" time

Sample images – COMPLETE FREE PLANS AVAILABLE at:
www.teslatech.info/ttstore/articles/geet/geet.htm

GEET Theory

The GEET Demystified

© C.P. Kouropoulos [date of writing unknown; source: http://rexresearch.com]

Brief Description

The GEET is a dynamic fuel-exhaust recycling device that can be fitted to an engine, between the air intake and the exhaust.

A model suitable for a small two- or four-stroke (lawn-mower or small generator) typically consists of two horizontally-lying, concentric steel or metallic pipes of about 50 cm in length, one inside the other. The outer pipe has an inside diameter of 25.4 mm, the inner pipe an outside diameter of 12.7 mm and an inner diameter of 12.4 mm. Within the latter is a long solid steel or iron bar, whose diameter is 12 mm, that doesn't touch it, except at three solder points at each of its extremities. Let us call A and B the two ends of the 50 cm long pipes and bar.

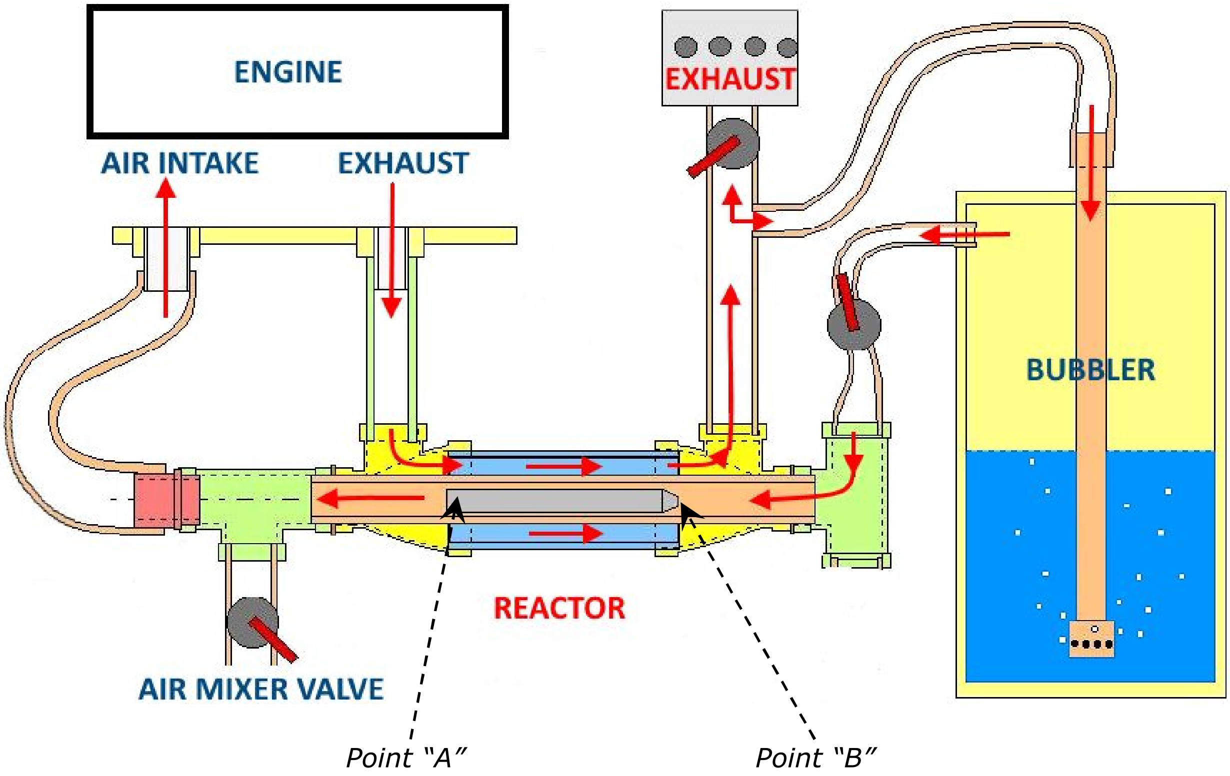

Point "A" Point "B"
(in the larger diagram above, "North" and "South" poles, accordingly)

The exhaust from the engine travels as follows:

- From A along the "outer" concentric space, between the two pipes, to B.
- From there, it is sent bubbling at high pressure to the bottom a jug of water with some fuel that is vaporized by the heat.
- It is then sent along the inner pipe, in the thin space round the central solid steel bar, back from B to A, to near the air intake, where it is mixed with some fresh air.
- The latter mixture is input to the engine.

A Preliminary Analysis of the GEET

Two-strokes are known to be inefficient as only a certain proportion of their fuel is burnt.

Their exhaust typically consists of the following:

1. Air somewhat depleted in oxygen
2. Carbon dioxide
3. Carbon and nitrogen monoxide
4. Water vapor
5. Unburnt volatile gasoline
6. Particles of heavier hydrocarbons, lubrication oil and soot.

In the case of four-strokes, there is less of 5 and 6.

Detailed description of the process:

- As the exhaust first travels between the "outer" space, between inner and the outer pipes, it heats their surface to its own temperature. In order that this temperature be as high as possible, the outer pipe should be thermally insulated with a glass wool jacket. Another contribution to higher temperatures at the inner surface of the outer pipe involves the Ranque-Hilsch[192] effect: the exhaust flow should spiral, so that the hotter components in the gas gather against the outer surface where the steam is more thoroughly reduced into hydrogen while the pipe surface is oxidized.

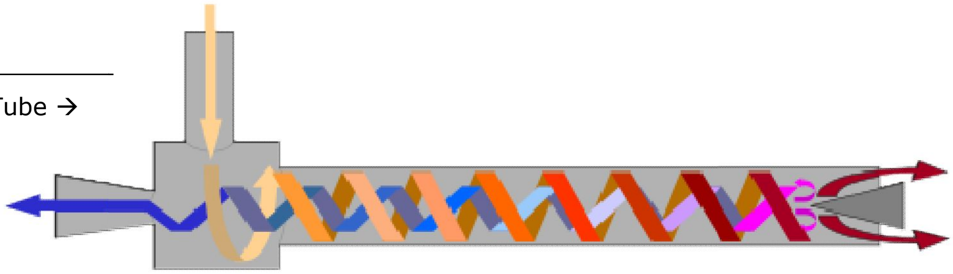

---

[192] Relates to Vortex Tube →

In turn, the released hydrogen reacts with the carbon dioxide into carbon monoxide and water ($CO_2 + H_2 >> CO + H_2O$) at high temperatures, while the steam can again be reduced by the hot iron into hydrogen. Provided that the outer surface of the cooler inner tube contains catalyzers such as nickel, already at 200°C, carbon dioxide and hydrogen combine into methane and water ($CO_2 + 4H_2 >> CH_4 + 2H_2O$), the latter of which can again be reduced at the hotter surface of the outer pipe. Therefore, both the water and the carbon dioxide are reduced, the exhaust becomes depleted in carbon dioxide and enriched in fuels such as carbon monoxide, hydrogen and methane.

- This pretreated exhaust bubbles through the jug of water and fuel {"Bubbler" in the diagram}, the latter remaining at the top when not miscible (gasoline, heavy fuel or miscible glycol alcohol, etc). The depth of the water increases the pressure in the preceding reducing stage. Now, along with some soot, heavy hydrocarbons and unburnt fuel that are recycled, the carbon dioxide dissolves in the water and is removed from the exhaust so long as the water isn't saturated. To increase the amount of carbon dioxide dissolved, the pressure should be maximal and the water circulated. In critical closed-cycle applications, the resulting carbonic acid could react with a metal such as zinc or magnesium to release hydrogen. The resulting carbonate and hydroxide, as well as the reducing metal of the inner surface of the outer pipe could then be recycled later by using solar energy. Another option is using some mix of photosynthetic algae in an adjacent first stage to convert the carbon dioxide into oxygen and biomass, and fermenting anaerobic bacteria in a second stage to generate methane and hydrogen from the latter.

- The fuel as well as some water are vaporized in the bubbler.

- The cooled and enriched exhaust now travels at high speed inside the inner pipe, as the available space is thin, round the solid steel bar. Here, it must be observed that there are heat gradients, as the outer surface of the inner pipe is heated by the exhaust, while the steel bar inside that doesn't touch it is cooled by the cooler flow of the bubbled exhaust. The Ranque-Hilsch effect can again be used to further reduce the temperature round the inner bar. This involves replacing the three external solder points by small soldered coiled lines of wire at the B end of the iron bar.

- Some of the previously generated hydrogen may, here again, catalytically combine with the remaining carbon dioxide into methane and water against the outer surface of the nickel inner tube.

- Because steel is magnetic and its Curie temperature is even higher than that of the outer, hotter pipe, all the surfaces inside the GEET are mesoscopically[193] strongly magnetized, locally, on the level of magnetic domains of about 80nm, even if this magnetism isn't apparent macroscopically. However, only the inner steel bar is in contact with a sufficiently cool flow so it is below the Curie temperature of the Magnegas™.

---

[193] On a scale between microscopic and macroscopic

As a result, when the molecules bounce against the surface of the pipes, they experience a strong magnetic field of several Tesla. As R.M. Santilli[194] has shown, diatomic molecules such as H_2 , O_2 and CO can be magnetically polarized, and may assemble into clusters that this researcher calls magnecules. These have a Curie temperature which is at about 150°C for H_2 and CO. The rate of formation of such magnecules will thus be higher on the cooler surface of the steel bar. The corresponding magnetically polarized gas is called a Magnegas™. Because most chemical reactions involve polarized molecules while ordinary gases are unpolarized, magnegases release far more energy than expected from the combustion of their unpolarized counterparts. Also note that, due to the recycling, the O_2 molecules may pass several times into the magnetically polarizing cavity.

MASER[195] emission might also occur in this cavity, which might accelerate the formation of magnecules.

The recycled and enriched exhaust thus in the end contains:

- CO, NO, O_2 and H_2 molecules, the latter resulting from the reduction of steam on the outer hot steel surface or from biomass recycling.
- Magnecules of the latter.
- Some methane from catalytic conversion of carbon dioxide and hydrogen or from biomass.
- Recycled unburnt fuel.
- Vaporized fuel from the bubbler.
- Less CO_2 than in the original exhaust, at least until the water becomes saturated in the simplest devices. This suggests the importance of increasing the pressure in the bubbler.

The mechanisms involved suggest an improvement in efficiency from:

- Thermally insulating the outer pipe.
- Placing reducing elements at the inner surface of the outer pipe, with high surface area if in the solid state, or as a liquid circulating blanket maintained by centrifugal forces in a rotating configuration.
- Using spiralling vents at the entry of the exhaust into the cylindrical outer space, and coiled elements at the entry of the bubbled exhaust round the inner bar so that the flow spirals and, by the Ranque-Hilsch effect, concentrates its hot components on the outside and its cooler ones on the inside.

---

[194] See Chapter 7.

[195] Microwave Amplification by Stimulation Emission of Radiation, learn more at https://einstein.stanford.edu/content/faqs/maser.html

- Using a steel or alloy with high magnetic permeability and saturation, or very pure Iron for the inner bar.
- Polarizing the fuel in the bubbler into a Magneliquid, and the fresh air into a Magnegas.
- Increasing the pressure at the bubbler so that a maximal amount of carbon dioxide is dissolved.
- Using a metallic powder of Zinc or Magnesium so that the resulting carbonic acid releases hydrogen and carbonate in critical closed-cycle applications, or a multistage biomass of photosynthetic algae and anaerobic bacteria to convert the carbon dioxide into oxygen and biomass and the latter into methane in less critical or fixed applications.

The central iron bar should be at less than 150°C (the Curie temperature of Magnegas™), the surrounding catalytic pipe at about 200°C (that converts carbon dioxide and hydrogen into water and methane), and the outer pipe at yet higher temperatures.

According to the inventor, Mr. Pantone, the central steel or iron bar acquires an overall magnetization and must always be oriented in the same way with respect to the magnetic north in devices where it is horizontal, and similarly with respect to the vertical, when vertical.

The Energy Balance

On the minus side:

- The vaporized fuel spent (whatever the actual proportion of fuel in the bubbler, which can be as low as 20%)
- The steel or reducing agent oxidized, mainly at the inner surface of the outer pipe
- The metallic powder turned into carbonate.

On the plus side:

- The unburnt fuel and hydrocarbons recycled, especially for two-strokes
- The unburnt CO and NO recycled
- The increased energy released by the use of magnecules
- The possibility of using a wide variety of cheap fuels.
- Dissolved CO_2 converted to oxygen and biomass and then the latter into methane and hydrogen in several stages or into carbonates and hydrogen by a metal in the bubbler itself or some adjacent reactor.

Any test of exhaust emissions should take into account the CO_2 retained in the water. Also note that, when this CO_2 is eventually released in the atmosphere or recycled, one is left with a brew consisting of residual, unvolatilized fuel, soot and various heavy hydrocarbons, which would be ideally suited for recycling in a "Hadronic Reactor" into Magnegas™. Thus, provided that the overall cycle proves to have a favorable efficiency, there might be a synergy between the GEET and Hadronic reactors, as they both involve Magnegases and the waste from the one may be taken as starting materials for the other.

For most two-strokes, there should be quite a significant improvement in efficiency from the recycling of the unburnt fuel alone. For other engines in which there is less of the latter, the gain could be lower but still not negligible. Note also that the Magnegas produced in "Hadronic Reactors" is unsuitable for two-strokes, as these require a liquid fuel into which the lubricating oil is mixed.

Thus, this system has several positive points. On the other hand, claiming that it runs on 80% of water and 20% of fuel when this is just the proportion that is present in the bubbler where the fuel is preferentially vaporized by the hot exhaust, ignoring the oxidation of the metal in the pipes and their effective lifetime, ignoring the CO_2 retained in the water, especially during the first ten minutes after start-up, as well as the liquid wastes that are produced when measuring the exhaust emissions and not mentioning for how long a specific test was performed can be very misleading, to the point of bordering on fraud[196].

Image: GEET replication by Claude and Phillipe Driot

Suggested improvements involve the use of spiralling aerodynamic flows so as to optimize the temperature gradients at several key locations by the Ranque-Hilsch effect (to minimize the temperature round the central iron bar, and maximize it at the inner surface of the inner and outer pipes), thermally insulating the outer pipe, increasing the pressure so as to maximize the solution of carbon dioxide in the bubbler, and circulating the resulting carbonic acid in adjacent reactors, using a multistage configuration of photosynthetic and anaerobic recycling biomass to convert it to oxygen and methane or using a reactive metal to release hydrogen in certain critical closed-cycle applications. Solar energy can be used at a later stage to release the oxygen taken up by the reducing metal and recycle it.

---

[196] In the opinion of C.P. Kouropoulos who probably did not have the test results available today.

The GEET Fuel Processor is a Self-Inducing Plasma Generator

© Paul & Molley Pantone

The first working prototype was developed long before the technical analysis was attempted. Plasma research is a fairly new field of acceptable science. At this time most printed text is from foreign Countries, and a majority from Russia.

The technology used in the GEET Fuel Processor is a combination of the most basic scientific principles, most of which falls within the normal rules and of thermodynamics. But some of the 70 simultaneous phenomena are not found in those books, since it is the combination of events, which is the body of this discovery. Put quite simply, the exhaust heat is transferred to the incoming fuel vapor, which must be maintained in a vacuum, and the overall configuration provides a molecular breakdown within the vacuum of all of the heavier elements. Therefore, intensifying the vacuum, the speed of molecular breakdown or reaction is magnified, and less heat is required.

The GEET Plasma unit generates several "electrical" fields at the same time while operating, some of which are in opposite direction and all are affected by the direction of mass movement as well as by the gravitational field of our planet. During lectures from coast to coast Paul and Molley have explained that it is frequency and vibration that determines the amount of plasma or energy being developed. Research in private laboratories in Europe is helping to isolate some of the basic field replication of the plasma generator that the Pantones need for visible demonstrations.

Many attempts to use the external electrical-mechanical devices to enhance the production of Plasma in the GEET Fuel Processor have all failed to show any promise, such as the Plasmatron. This has occurred because the outside interference has opposed the "natural" order of the energy, which must be self-generated to maximize the results, as well as will increase the charge-discharge at specific needs of demand of the Plasma – or GEET GAS. It should also be noted that using outside non-natural heating diminishes the fields which are normally self-generated.

The specific movement of vapor within the GEET Fuel Processor is "focused" to exact flow direction and velocity being self created thereby maximizing and intensifying the field and enhancing the molecular or atomic disassociation. Without all other natural elements increasing to equal proportions, one cannot expect that merely increasing the Arc-Field will be the main reason for specific success of any given substance to be broken down to its base elements. When the ideal Plasma has been created, that's the time to begin increasing or decreasing all parameters involved at their respective equal or balanced increments to satisfy an increase or decrease in the Plasma flow. In doing so, one can increase the Plasma flow to a viable delivery state for all commercial use demands.

During tests the over-revving to engines has startled engineers and scientists from around the world, as engines are sped up to over twice the normal rpm, and slowed down to a fraction of their normal idle speed, with no noticeable vibration. Have you ever seen a 350 Chevrolet idle at 80 rpm? We have.

All of the currently studied Plasma generators basically share a design and operational feature in that they attempt to push the fuel, under pressure, into a reaction, whereby a need arises for outside energy to force the device to function. The most unique feature of the GEET Plasma Fuel System is that by supplying the fuel into the Plasma chamber in a vacuum and through a longitudinal, natural release, causes a Radial reaction which is self induced, which creates energy as electrons are pulled into the reaction of plasma, instead of consuming energy. Thus the Plasma becomes more "homogenized" with atmospheric air, causing a well-blended fuel for final delivery.

An additional stabilizing feature within our system is the natural circulation of opposing masses as a vorticular[197] motion within the Plasma Field, a condition as described by Molley Pantone as Thermal momentum-or Inertia. Such field is caused in part by the chamber beginning before and after the Field zone. The size of the Field zone must coincide with the fuel and parameters with specific limitations, dependent on the fuel demand. Now we should also explain that a small unit, such as a 10-hp engine can be used as a "servant" to produce fuel to be used by an unmodified larger engine or furnace, by adapting pumps and only modifying the air intake only. Thus a 10-hp engine could make the fuel for a locomotive.

The exact length of the Plasma chamber need be adjustable to fully accommodate rapid change of fuels when different blends are being used. This is quite simple but requires some very expensive equipment for analysis of the final exhaust for the average mechanic.

The "balance" point of a perfectly adjusted GEET Plasma reaction chamber, will give the same temperature coming out of the exhaust pipe as the ambient air, as well as the air quality should be the same or a slight increase of oxygen coming out of the tailpipe. So far the inventor has accomplished a 2% increase in oxygen coming out of an internal combustion using crude oil as fuel and a 3.5% increase using Battery acid mixed with 80% saltwater. At the higher than ambient oxygen levels you normally find ice forming on the exhaust pipes as a normal function of this phenomenon.

When the Plasma field chamber is too short or too long for the density of the fuel being used, it overheats the South end and chills the North end of the reactor, this also causes the field to consume oxygen, instead of creating it. The direction and configuration of the heat source is critical to the proper balance of the reaction to create Plasma. We have now learned that down is the same as South in relationship to using a compass, and therefore North is up.

---

[197] Having the motion characteristics of vortex.

Other Plasma generators, such as the → copycat from MIT, which they call the Plasmatron, uses outside applied power to create heat to run the units, but have extremely limited use and output, when compared to the GEET system. Since the power output of Plasma is constant and generates power we can only assume that it is of a DC nature and is a constant output which we have not yet attempted to harness (hopefully coming soon.)

There will be a large number of reports dating back to 1984 that the inventor was not ready to release until he felt the timing was right. He feels the timing is now right and these will be posted as soon as possible. If you would like to share some of your experience with the inventor contact him at ~~info@geet.com~~

For you,

And the World,

Paul & Molley Pantone

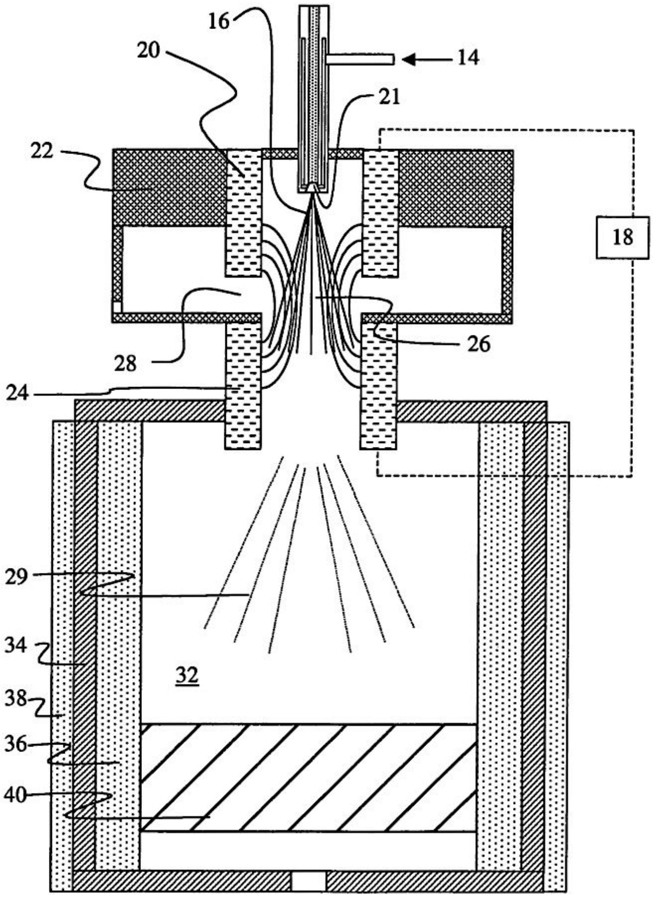

Image: One embodiment of the Plasmatron by MIT (Massachusetts Institute of Technology), US Patent № 7597860
http://www.google.com/patents/US7597860

The GEET Fuel Processor… The Ultimate Home Power Source

© Paul Pantone

The Geet fuel processor may soon make it possible for you to own the ultimate home production power plant… one that heats your water, generates electricity, takes care of heating and air conditioning, simply by utilizing waste heat from refrigeration and applying it to storage or hot water, while the generator is giving you all the electricity you want.

In simple definition, the GEET Fuel Processor could be called a new type of carburetor with a miniature refinery built in. With it, there is no need for catalytic converters, smog pumps and many other costly items on cars, as the GEET fuel processor is not just a fuel delivery system it is also a pollution elimination unit! Your mileage will be greatly increased if you are truly consuming ALL of the available energy from whatever fuel you may be using.

I began working on the original concept of better mileage over fifteen years ago. During the fifteen years of testing and research, I was able to achieve the goals of ZERO pollution, while running internal combustion engines on fuel such as crude oil, battery acid, cleaning solvents, even gasoline… some of the tests were done with mixtures with as much as 80% water. IMPOSSIBLE??? SEEING IS BELIEVING!

Having demonstrated the GEET Fuel Processor countless times, I heard over and over "*That's impossible!*" Most of the hundred scientists who have been invited to help in this project have refused to even come out to look at it, claiming it is impossible. Yet after repeated showings, many potential financial backers have depended on the professional opinion of qualified people, who did not even take the time to even look.

One scientist – Jim – who wanted to help me, was employed at a major United States Testing Laboratory. We spent several days reviewing how and why the device worked. Jim claimed he could get all the necessary funding to get through the R&D stages by telling the other scientists at work what he had viewed. Jim told me to call him at work the following Wednesday.

When I called the number I was informed that Jim was asked to resign. They told me that Jim must have been doing some drugs, if he truly believed that he saw a gasoline engine run on crude oil with no pollution.

This type of response is very normal to this inventor. Many sincere people have turned their backs and walked away, because of the input of knowledge of others who laugh and say it is absolutely not possible.

However, a few years ago, at a smog certification station in California, this fuel system was demonstrated while being monitored and videotaped. While running a gasoline engine on crude oil, the final exhaust was actually cleaner than the air in the establishment – zero pollution. This does not defy physics; it only operates within the most basic laws of physics in a unique manner.

This insert is of another dyno test in France (source: http://www.panacea-bocaf.org/geet.htm - which is in itself a great insight into GEET and Pantone)

A French resident applied the open source SPAD[198] variant to his Diesel car. The producers of a French news story conducted a dyno and emissions test on his car.

A scene from the news report – a car fitted with a SPAD variant system undergoing emission testing →

Their findings showed that **the CO_2 levels were as low as 0.1%** (see below). Without the SPAD these levels registered 8.6%. Other Nox and hydrocarbon emissions were reduced significantly. This Diesel car also gained 19% in fuel economy (more is possible).

---

[198] One of the GEET systems used widely by European farmers on their tractors.

Diesel Emissions engine test done by the French news report:

The pollution cutting attributes of the Paul Pantone GEET are a brand new discovery. GEET Pantone study for ***ENSAIS (Ecole Nationale Supérieure des Arts et Industries de Strasbourg)*** published in 2004 by EHSAIS Engineer Christophe Martz "Development of a test-and-characterizations bench of P. Pantone's GEET process for reforming of hydrocarbons"*.*

	GAZOIL	+ SYSTÈME PANTONE
CO_2	8,6%	0,1%
Nox	348 ppm	168 ppm
HC	3 ppm	1 ppm
CONSOMMATION	11,7 l/100	9,8 l/100

http://www.econologie.com/file/moteur_pantone/Resume_PFE_CM.pdf

← This testing facility has been built to characterize the GEET process by measuring definite points such as specific consumption, different flows, temperatures, pressures, H_2/O_2 gas analysis, etc.

Martz validated that with GEET it is possible to achieve 20-50% better fuel economy, as well as 95% reduction in harmful emissions.

Basics of GEET technology

(Paul Pantone's article continued from above)

The GEET fuel processor is a self inducing plasma generator. In my case, the working proto type was developed long before the technical analysis was attempted. Plasma research is a fairly new field of science. Most of the available texts on this subject are from foreign countries.

The technology used on the GEET fuel processor is a combination of very basic scientific principles which fall within most of the normal rules and laws of thermodynamics.

Put quite simply the exhaust heat is transferred to the incoming fuel, which is in a vacuum, and the overall configuration provides a molecular breakdown within the vacuum , the speed of the molecular reaction, or breakdown, is greatly magnified.

The GEET Plasma Generator

The phenomenon which occurs within and around the GEET Fuel Processor can best be described as controlled lightning. As masses of cold and warm air colliding, an electrical discharge occurs. The specific lengths of each colliding mass determine the type and the amount of discharge.

It can be a bolt of lightning, or if the configuration of masses is conductive to a radial type of discharge it may appear as a ball of energy. Many discharges of this nature are so small they are not visible to the human eye. Others are magnified by moisture and radiate in an energy field which is visible as colored light.

When the electromagnetic field is radial as well as longitudinal, and balanced to create the center of the plasma reaction, maximum efficiency of the field is accomplished. This is done within the GEET Fuel Processor, as the plasma is created on demand. Using a steady self-generated magnetic field one does not have the problem of random Plasma clusters, as every molecule is held as a constant potential contributor to the demand and the demand controls the field which stabilizes itself within a specific ratio.

The elemental components of the GEET Fuel Processor allow the transfer of virtually all the generated heat into the plasma, which further stabilizes the electromagnetic field, as well as increases the electron flow at any specific need, on demand.

In the GEET device the plasma fields is generated internally. Many attempts to use external electrical mechanical devices to enhance the production of plasmas in the GEET fuel processor, have all failed. This has occurred because the outside interference has opposed the “natural” electromagnetic field, which is self-generated in the GEET fuel processor. Thus the entire magnetic field collapses and entire system shuts down.

In conventional generators, the means of introduction of the magnetic flow is perpendicular or angled to the plasma tube through wave guides, the effectiveness is diminished due the turbulence created. By simply changing the position of the electrode to the center of the plasma field, the turbulence is eliminated, thus more usable energy is created. Furthermore, less extraneous equipment is used to produce and control the plasma.

The movement within the GEET Fuel Processor is “focused” to the specific flow direction of the Plasma being created, thereby maximizing and intensifying the magnetic field and enhancing molecular, or atomic, disassociation.

Without all other elements increasing to equal proportions, one cannot expect that merely increasing the electric arc/magnetic field will be the main reason for specific success of any given test. When the ideal plasma reaction has been created is the time to begin increase or decreasing all parameters involved at their respective equal, or balanced, increments to satisfy an increase or decrease in the plasma flow. In so doing one can increase the Plasma flow to a viable delivery state for commercial use. Plasma Flow

All the current studied Plasma generators, basically share a design and operational feature in that they attempt to PUSH the Plasma chamber. One of the unique differences of the

GEET Fuel Processor, is that reduced pressure (vacuum), PULLS the Plasma, which enhances the homogenization of the newly created fuel.

An additional stabilizing feature within our Plasma unit is the recirculation zone is through and beyond both ends of the magnetic field, thus intensifying and further stabilizing the plasma. The size of the recirculation zone needs to coincide to all other parameters within specific limitations- depending on the fuel source-and demand at any given time.

The exact length of the Plasma generation chamber needs to be fully adjustable, to compensate for changes in the molecular density or massive expansions of the fuel being used for Plasma. An example of this would be when 20% battery acid is mixed with 80% saltwater and used as fuel; it needs a shorter Plasma chamber than the one needed for Alaskan Crude Oil.

If the same or larger unit is chosen for the acid mix, the normal running temperatures are exceeded, and the balance of the plasma field is at its optimum performance when ambient air and the final discharge are at the same temperature, and air quality at both points are equal.

When the plasma field tube is too short or too long for the density of the fuel being used, it overheats the high end or forms ice on the low end, respectively. This characteristic is further evidence by numerous tests. When pollutants are noticeable there is an imbalance.

The direction and configuration of heat applied, was made on many of the prior units to formulate conclusions. The specific natural flow of self-generated energy which does create its own fields (outside of lightning, and natural phenomenon).

Other plasma generators using outside applied power seem to have less technological reason and practical use than the GEET fuel processor which requires no outside power. Since the energy field which is radial and longitudinal, as well as self-generated and constant, we may assume that the current-voltage characteristic of the GEET plasma field is a pulsating direct current. New Theories Needed

With the proper team of open minded scientists, this technology should be easily understood. Since prototypes already exist. A few months ago, when the inventor invited scientists from all over the country, to help in compiling a reasonable theory or formula for why the invention works, he found very few takers.

One scientist, Dr. Andreas Kurt Richter, spent most of a week at the inventor’s home as a house guest. There were hours of discussion on physics and unknown phenomenon. In a letter, dated July 3, 1995, Dr. Richter states, I am a consultant to Paul Pantone in the search for the scientific and technical explanations to understand the operation of this energy device. According to my present knowledge it should not work and I would not believe it had I not seen it with my own eyes. It is my opinion that Mr. Paul W. Pantone has invited an amazing energy device or engine with potential as yet unheard of.

Another scientist, Dr. Grant Wood, has similar comments. Dr. Wood has taught automotive science for most of the last 35 years.

I am still seeking scientists, doctors, manufacturers, and all other professionals to assist me, not only in this but hundreds of other inventions and products and concepts. Testing

Getting testing done or the interest to get them done at such places as Lawrence Livermore Laboratories, Southwest Research Laboratories Universities, etc., is difficult. First you must convince them it works, and then have a ton of money. These laboratories have expressed that testing would be a waste of money, and their valuable time. Most simply do not understand this device.

To get testing done, the inventor went to numerous companies including Cooper Industries, Briggs and Stratton, Waukesha (this list is quite long), and in most cases these industries were not interested, even though many sent representative out and can convey that the prototypes did in fact work. At first, most of the tests were accomplished on small internal combustion engines. Combustion studies were done in furnace applications to enable the inventor a better fuel study.

In 1983, I approached the small engine manufacturers in an effort to gain knowledge and technical support. Up to this point I had used old beat up equipment for most of my testing. Briggs and Stratton was the only company willing to discuss such technology which is advanced, they wanted to be the first engine company to go public.

A few years later in 1987, I did go to Wauwatosa, Wisconsin and ran this engine, hooked up to their testing dyno. These tests were done on crude oils, gasoline, and fuel oils, mixed with water. They knew the engine worked and would be controversial and suggested that I try to market the device the device in third world countries. I still want to market the device in the United States first.

A few test engines have been tested in cars. Now a 240 kW Waukesha Generator (Model #H2475) has also been retrofit with the GEET Fuel Processor and the only thing needed to get this into production is automatic controls and money. A Pollution Solution

Many have asked what the true value of this technology is. To being with, please place a value on what would it be worth, in dollars and cents, if you could just double the mileage/performance on every car, truck, locomotive, ship, furnace, boiler, hot water heater, etc., not to mention reducing pollution, on a world wide application? The truth is that if you only disposed of some forms of toxic waste, it would be invaluable to man. And if you generated energy from raw crude oil, without the need for refineries, this would satisfy many countries all by itself.

Although the automotive field is very large, our global buildup of toxic waste has become my first choice for production. This can be accomplished in a reasonably short time by installing electronic controls to the necessary control components.

Utilities and communities can greatly benefit from the GEET Fuel Processor, while running power plants, desalinization plants, pumping plants, etc., all the while getting paid to take toxic fuel to run the plants. When toxic waste is transported from coast to coast there is always a danger of accents, and by locating toxic disposal units throughout the country this will shorten the risk and distances traveled, providing more safety to the public.

GEET (Global Environmental Energy Technology), was formed as a holding company for this technology. Patent applications have been filed for the US and foreign Countries. The GEET Business Trust is exclusively authorized as the only licensing agency of the technology.

Since this technology was published in the Exotic Research Report and its subsequent demonstration at the New Energy Symposium in Denver this April, many developments have taken place. Contracts are being prepared to utilize this technology on locomotives and power plants in other countries and the future looks promising.

However, I want to insure that the technology is not suppressed. So in the interest of humanity, 1000 units of my original prototypes are being made available at $2500 each.

A Ford Pinto 2300 Engine has been recently converted to use the device and is now in the shop being tested. We are expending every effort to make this unit available to Ford Pinto owners (with the 2300 Engine) within the next 30 days.

To obtain a GEET device, ~~contact me (Paul Pantone) at (801) 281-2462~~. For those who are attending the ~~upcoming International Tesla Symposium (July 18-21)~~, we hope to have the car at the symposium for demonstration as well as our smaller prototypes. We will make a full demonstration of the engine. ***{Please note that this was written by Pantone before his departure; to get active with GEET today find the websites, contacts and product manufacturers listed at the beginning of the chapter. ~Ozzie}***

1000's of GEET Replications in Europe

NOTE: This section does not constitute scientific validation – find those below.

Many more ***cars, trucks, generators and construction machines equipped with GEET*** are recorded and photographed with their replication details at www.quanthomme.info/qhsuite/GillierPantoneDe2004a2010/Real2010SystGillierPantone.htm

Replications by Michel David: http://quanthomme.free.fr/pantone/PageM_David.htm
Other replications, installations, public demonstration events and GEET/SPAD workshops in France: http://quanthommesuite.pagesperso-orange.fr/RealPMCPantone.htm


In October 2010 I took these photos in a village near Moscow. The red circles mark installations of SPAD devices (GEET variation that's very popular with European farmers) that they made in the barn, one on their stationary genset, the other on their *Belarus 82.1* tractor. The installer, my highly trusted friend, reported a high-percentage boost in fuel economy of well over 30%, with better engine torque/performance. Not only that but the farmer, on a busy plowing day, could finish the day earlier as he didn't have to come back for refueling as much as before GEET. The farmer was very happy, and no KGB agent showed up to spoil the party…

One important lesson from the Russian installer: fuel economy will be best realized when the engine works under real-life loads (load fluctuates throughout the day and the hour) rather than synthetically constant on a lab's test bench, where the effect will be smaller.

SPAD Replication (Free Information, Public Domain)

The simple system you've seen on the Russian tractor above is a 2006 French development based on Pantone's GEET. It's called SPAD which stands for (in French) "Système Périphérique d'Amélioration Dynamique" (in English: "Peripheral Dynamic Improvement System" which abbreviates to PDIS but nobody calls it that – just SPAD).

SPAD was the first product of HYPNOW (Help Your Planet NOW), its design is basically an *all-in-one device* for tractors or agricultural machines with vertical exhaust pipe. It's made of stainless steel and works with water. In my Russian friend's replication, he cut part of the side and installed a glass window so the farmer can easily check water level any time.

Many SPADs are still working, satisfying their owners, who report between 10% and 50% better fuel economy depending on the case (load ratio and sensitivity of the governor).

In 2007 the company (HYPNOW) stopped manufacturing this design and replaced it with the more flexible – yet similar performance – design called Retrokit → that you can order from: http://www.hypnow.com/retrokit.html

For the handymen, a detailed plan (SPAD, not Retrokit) is included in the book ***"They've used water in their engines, why not you?"*** I've read the book; it's well written by Christophe Tardy & David Dieulle and handsomely illustrated, and apart from SPAD it covers dozens of other Waterfuel inventions – worth reading and keeping! Order your copy from:

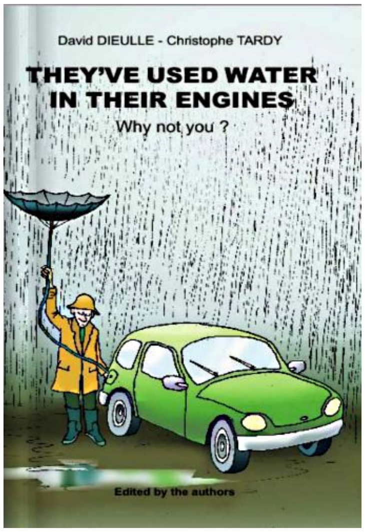

- Blurb®, a self-publishing and marketing platform: www.blurb.com/b/829413-they-ve-used-water-in-their-engines

- Amazon: www.amazon.com/Theyve-Used-Water-Their-Engines/dp/2953341315

Paul Pantone's Original Patent

Inventor: Paul Pantone. U.S. Patent № 5794601 A "Fuel pretreater apparatus and method" – 1998

ABSTRACT

A novel fuel pretreater apparatus and method for pretreating an alternate fuel to render it usable as the fuel source for fuel burning equipment such as internal combustion engines, furnaces, boilers, and turbines, includes a volatilization chamber into which the alternate fuel is received. An exhaust plenum may enclose the volatilization chamber so that thermal energy supplied by exhaust from the fuel burning equipment can be used to help volatilize the alternate fuel. A bypass stream of exhaust may be diverted through the alternate fuel in the volatilization chamber to help in volatilizing the alternate fuel and help carry the volatilized fuel through a heated reactor prior to its being introduced into the fuel burning equipment. The reactor is preferably interposed in the exhaust conduit and is formed by a reactor tube having a reactor rod mounted coaxially therein in spaced relationship. The exhaust passing through the exhaust conduit provides thermal energy to the reactor to pretreat the alternate fuel.

DESCRIPTION

BACKGROUND OF THE INVENTION

1. Field

This invention relates to fuel burning equipment and, more particularly, to a novel fuel pretreater apparatus and method for making it possible for such fuel burning equipment to utilize as a fuel a material not otherwise considered suitable as a fuel for such equipment.

2. State of the Art

Most fuel burning equipment in use today is designed to burn a particular fuel. For example, internal combustion engines are designed to burn gasoline or diesel fuel, furnaces and boilers to burn natural gas, oil, or coal, and turbines to burn kerosene or jet fuel. Fuels or other materials other than the fuels for which the equipment is designed to burn cannot generally be used in such equipment.

For example, in internal combustion engines, particularly in light of the extreme sophistication of many current engines, not only for fuel economy but also for reduction in the emitted pollutants, great care is taken in the selection of the fuel grade particularly as to its quality prior to its introduction into the internal combustion engine. One does not consider crude oil or recycled materials such as used motor oil, cleaning solvents, paint thinner, alcohol, and the like, as a suitable fuel source for an internal combustion engine.

Further such materials would not be considered suitable fuels for furnaces, boilers, turbines, or most other fuel burning equipment. In addition, one would not consider using such fuels if contaminated by water, nor would one consider using nonfuels such as used battery acid or other waste products as fuels for fuel burning equipment.

SUMMARY OF THE INVENTION

The present invention is a novel fuel pretreater apparatus and method for fuel burning equipment. This novel fuel pretreater enables the fuel burning equipment to utilize as fuels combustible products selected from material such as crude oil or recycled materials such as motor oils, paint thinners, solvents, alcohols, and the like and noncombustible products such as battery acid. Any substance that can be preheated and then burned in the fuel burning equipment will be referred to as alternate fuel. This alternate fuel is introduced as a liquid into a volatilization chamber.

The volatilization chamber may be heated to aid in volatilization and in most cases may be advantageously heated by thermal energy from the exhaust in the exhaust conduit of the fuel burning equipment. A portion of the exhaust may even be bubbled through the alternate fuel to assist in the volatilization of the alternate fuel. The fuel vapor produced in the volatilization chamber is drawn through a heated thermal pretreater.

The thermal pretreater may be mounted, preferably concentrically, inside the exhaust conduit to be heated by the exhaust gases. The thermal pretreater serves as a reactor and is configured as a reactor tube having a reactor rod mounted, preferably concentrically, therein with a reduced annular space surrounding the rod. The volatilized alternate fuel passes through this annular space where it is subjected to thermal pretreatment prior to being introduced into the intake system of the fuel burning equipment.

FIG. 1

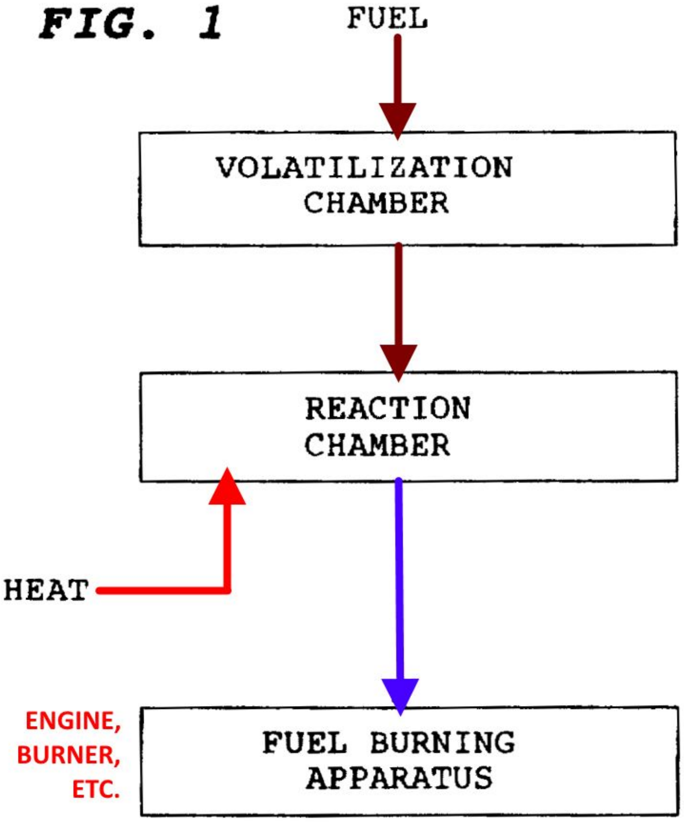

THE DRAWINGS

The best mode presently contemplated for carrying out the invention is illustrated in the accompanying drawings, in which:

FIG. 1 is a block diagram of a basic fuel pretreating apparatus of this invention;

FIG. 2, a schematic flow diagram of the novel fuel pretreater apparatus of this invention shown in the environment of an internal combustion engine; and

FIG. 3, an enlarged cross-sectional view of a schematic of the reactor portion of the fuel pretreater of FIG. 2.

DETAILED DESCRIPTION OF THE ILLUSTRATED EMBODIMENT

The invention is best understood from the following description and the appended claims taken in conjunction with the accompanying drawings wherein like parts are designated by like numerals throughout.

The present invention is a unique apparatus and method for pretreating materials to be used as fuel for fuel burning equipment such as internal combustion engines, furnaces, boilers, turbines, etc. The pretreatment makes it possible for the fuel burning equipment to utilize as its fuel source fuels or other materials that are generally considered as not being suitable fuels for such fuel burning equipment. These alternate fuels include almost any liquid hydrocarbon such as crude oil or recycled material such as motor oil, solvents, paint thinners, and various alcohols, to name several. These alternate fuels may even be contaminated with water or may be material such as used battery acid which is not considered combustible or a fuel.

Importantly, as shown in FIG. 1, the alternate fuel is volatilized in a volatilization chamber and is then subjected to a high temperature environment in a heated reaction chamber prior to its being introduced into the intake system of the fuel burning equipment. The reaction chamber provides a heated reaction zone with a reaction rod therein about which the fuel flows. It is this flow through the heated reaction zone about the reaction rod which makes the fuel suitable for burning in the fuel burning equipment. In most cases, since the fuel burning equipment involved will produce high temperature exhaust gases, in order to save energy, the heating for the reaction chamber will be provided by the exhaust gases from the fuel burning equipment. The reaction chamber will thus usually be positioned in the exhaust conduit, whether an exhaust pipe, flue, chimney, etc., leading from the fuel burning equipment.

It is believed important that the fuel flow through the reaction chamber be opposite the flow of exhaust gas in the exhaust conduit so that the most intense heating of the reaction chamber is at the end thereof where the fuel exits the reaction chamber. Currently, it is not known precisely what happens to the volatilized alternate fuel in this high temperature environment although one speculation is that the larger molecules are broken down into smaller molecular subunits of the heavy molecules.

In any event, I have found, for example, that I am able to satisfactorily operate an internal combustion engine using as my fuel source materials generally considered to be totally unsuitable as fuels for an internal combustion engine. For example, in one experimental run I was able to successfully operate an internal combustion engine using recycled motor oil. In another experimental run I was able to operate the internal combustion engine using crude oil as my sole fuel source. In yet another run I was able to use waste battery acid as my sole fuel source.

However, I should state at this point that when the reaction chamber is heated by exhaust gases from the engine, in order to generate sufficient thermal energy necessary to volatilize the alternate fuel in the volatilization chamber, it is necessary to operate the internal combustion engine initially using ordinary gasoline. This step is necessary since, absent my unique pretreatment process, it is impossible to operate an internal combustion engine with the alternate fuels that I am using. Accordingly, the internal combustion engine is started and operated for an initial period until sufficient thermal energy has been generated in order to initiate the volatilization and the pretreatment processes. Once these processes are self sustaining, the fuel system is switched over from the gasoline system to the alternate fuel system. The internal combustion engine continues to operate for as long as the alternate fuel is supplied or until the internal combustion engine is switched off.

Similarly, with other fuel burning equipment, when the reaction chamber is positioned in the exhaust conduit, conventional fuels are supplied to the equipment upon start up and until sufficient thermal energy is supplied to the reaction chamber to produce fuel usable in the equipment from the alternate fuel.

The invention will be illustrated and described in detail with respect to an embodiment thereof for use with an internal combustion engine. Referring now to FIG. 2, the novel fuel pretreater apparatus of this invention is shown generally at 10 and includes a volatilization chamber 12 and a fuel pretreater section 14 incorporated into an exhaust conduit 16.

FIG. 2

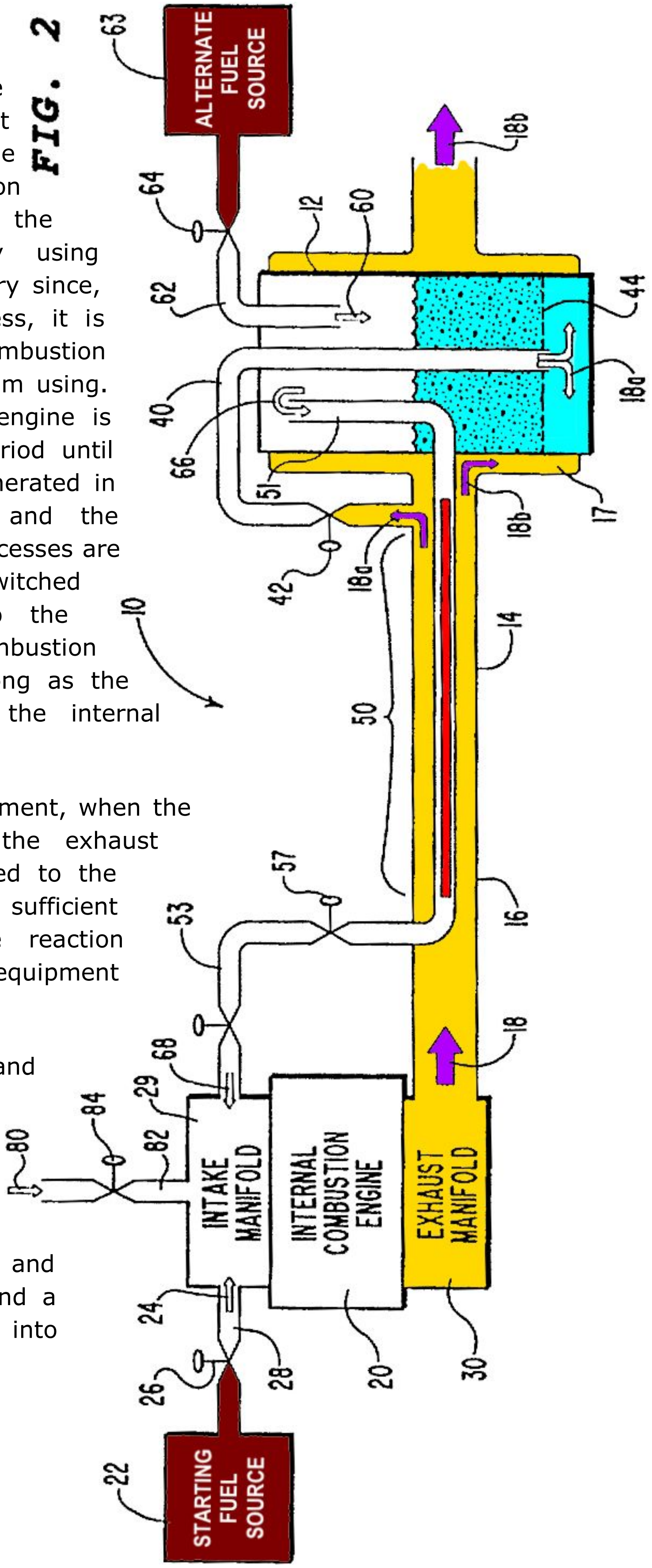

Volatilization chamber 12 is enclosed in an exhaust plenum 17 through which a stream of exhaust 18 passes. Exhaust 18 is produced by an internal combustion engine 20 which can be any suitable internal combustion engine ranging in size from a small, one-cylinder internal combustion engine to a large, multicylinder internal combustion engine. Internal combustion engine 20 is shown herein schematically particularly since no claim is made to an internal combustion engine, per se, only to the novel fuel pretreater apparatus 10 shown and claimed herein.

Internal combustion engine 20 includes a fuel tank 22 which supplies a starting fuel 24 and has a valve 26 for controlling the flow of fuel 24 through a fuel line 28 into an intake manifold 29. Fuel 24 enters internal combustion engine 20 through an intake manifold 29 either through carburetion or fuel injection (not shown), both of which are conventional systems for introducing fuel 24 into internal combustion engine 20 and are, therefore, not shown herein but only indicated schematically through the depiction of intake manifold 29. Fuel 24 is ordinary gasoline and provides the necessary starting fuel for internal combustion engine 20 until sufficient thermal energy has been produced in order to sustain the operation of volatilization chamber 12 and pretreater section 14. Thereafter, valve 26 is closed and internal combustion engine 20 is operated as will be discussed more fully hereinafter. Internal combustion engine 20 produces exhaust 18 which is collected from internal combustion engine 20 by an exhaust manifold 30. Exhaust 18 is then directed through exhaust conduit 16 into fuel pretreater 10 where it provides the necessary thermal energy for the operation of fuel pretreater 10.

Exhaust 18b represents a portion of exhaust 18 and passes through plenum chamber 17 surrounding volatilization chamber 12 prior to exiting exhaust conduit 16. Exhaust 18b represents the residual portion of exhaust 18 since a bypass 40 diverts a portion of exhaust 18 (shown as exhaust 18a) into volatilization chamber 12. Plenum chamber 17 acts as a heat exchanger for transferring thermal energy from exhaust 18b to volatilization chamber 12. A valve 42 controls the amount of exhaust 18a diverted into volatilization chamber 12.

Volatilization chamber 12 receives a quantity of alternate fuel 60 through a fuel line 62 from an alternate fuel source 63 with the flow thereof being controlled by a valve 64. Alternate fuel 60 accumulates as a pool of alternate fuel 60 in the bottom of volatilization chamber 12. Bypass 40 directs exhaust 18a into the bottom of the pool of alternate fuel 60 where a bubble plate 44 disperses exhaust 18a upwardly into the pool of alternate fuel 60 in order to assist in the volatilization of alternate fuel 60. However, the primary source of thermal energy for the volatilization of alternate fuel 60 is supplied by exhaust 18b as it passes through plenum chamber 17. The volatilized alternate fuel 60 is shown as volatilized fuel 66 which passes into an inlet 51 which is the end of reactor tube 52 extending upwardly into volatilization chamber 12.

Referring also to FIG. 3, an enlarged segment of pretreater section 14 is shown generally as a reactor 50 which includes a reactor tube 52 located concentrically inside exhaust conduit 16. A reactor rod 54 is mounted concentrically in spaced relationship inside reactor tube 52 to provide an annular space or reaction chamber 56.

FIG. 3

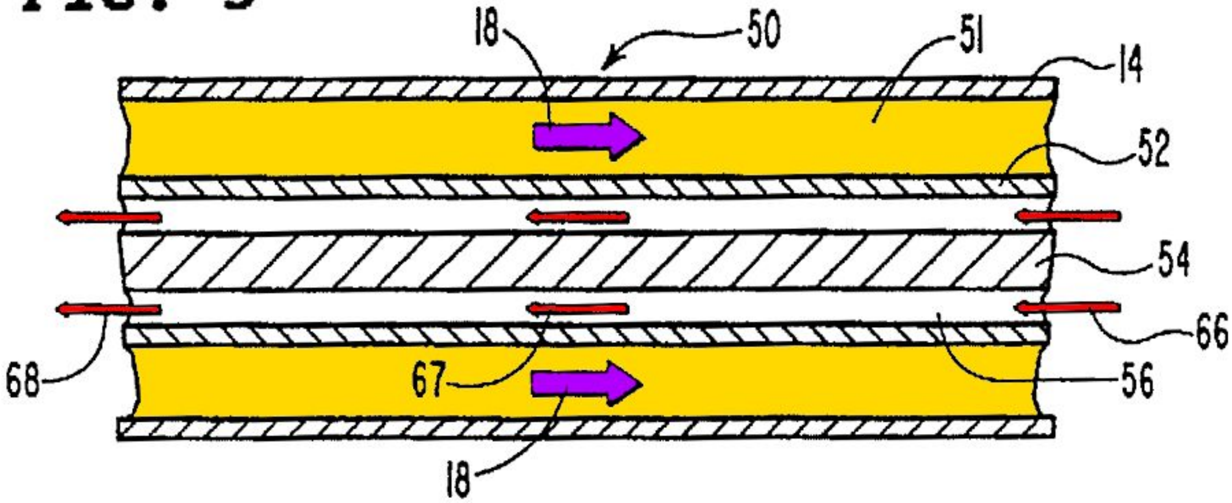

As shown, exhaust 18 passes through an annular space 51 surrounding reactor tube 52 where it transfers a portion of its thermal energy to reactor tube 52. Volatilized fuel 66 passes countercurrently through the annular space of reaction chamber 56. The turbulent mixing of volatilized fuel 66 as it passes through reactor 50 in combination with the thermal energy imparted to it from exhaust 18 along with what is believed to be a catalytic reaction therein initiated by reactor rod 54 produces a pretreated fuel 68. Pretreated fuel 68 is then directed through an intake line 53 (which is an extension of reactor tube 52) into intake manifold 29. A valve 57 in intake line 53 controls the flow of pretreated fuel 68 into intake manifold 29. Supplemental air 80 is introduced into pretreated fuel 68 through an air intake 82 with the flow of supplemental air 80 being controlled by a valve 84.

The presence of the reactor rod has been found important to operation of the invention. The make up of the reactor rod does not appear to be important. A steel reactor rod has been found satisfactory as have stainless steel, aluminum, brass, and ceramic reactor rods.

Steady state operation of internal combustion engine 20 involves exhaust 18 contributing thermal energy to reactor 50. A portion of exhaust 18 is diverted as exhaust 18a and bubbled through the pool of alternate fuel 60 in the bottom of volatilization chamber 12. Exhaust 18a combines with the volatilized fuel from alternate fuel 60 to provide volatilized fuel 66. Volatilized fuel 66 is drawn into inlet 51 thence through reaction chamber 56 of reactor tube 52. The balance of exhaust 18b passes through plenum chamber 17 where a substantial portion of the balance of the thermal energy in exhaust 18b is transferred into alternate fuel 60 to assist in the volatilization of the same.

The method of this invention is practiced by starting internal combustion engine 20 using starting fuel 24 obtained from starting fuel tank 22. The flow of starting fuel 24 through fuel inlet line 28 is controlled by valve 26. Valve 84 is opened initially to allow the free flow of air 80 through air intake 82 during this starting phase of internal combustion engine 20. Internal combustion engine 20 generates exhaust 18 which is collected in exhaust manifold 30 where it is then directed into exhaust conduit 16. Exhaust 18 contains a significant amount of thermal energy resulting from the combustion of starting fuel 24 in internal combustion engine 20. A portion of the thermal energy in exhaust 18 is used to heat reactor 50 and then to volatilize alternate fuel 60. Specifically, exhaust 18a is diverted through exhaust bypass line 40 into volatilization chamber 12 where exhaust 18a is dispersed by bubble plate 44 into alternate fuel 60. Exhaust 18a transfers its thermal energy to alternate fuel 60 and also provides a carrier stream for the volatilized products of alternate fuel 60 so that this combination becomes volatilized alternate fuel 66 which is then drawn into intake 51. At this point it should be noted also that valve 84 is partially closed in order to create a partial vacuum in pretreated fuel line 53, which means that a partial vacuum will also be created in intake 51. Simultaneously, valves 42 and 57 are selectively controlled in order to suitably recirculate the flow of exhaust 18a and volatilized alternate fuel 66, respectively. In the meantime, the balance of exhaust 18 becomes exhaust 18b which passes through plenum chamber 17 where it transfers its thermal energy into volatilization chamber 12 and alternate fuel 60 therein. Accordingly, a major portion of the balance of thermal energy in exhaust 18 after exhaust 18 has passed through reactor 50 is transferred into alternate fuel 60 for the volatilization of the same.

Volatilized alternate fuel 66 is directed into reaction chamber 56 where it is subjected to the pretreatment process of this invention by becoming reaction fuel 67 and then pretreated fuel 68. At the present time I am unable to state with any degree of certainty precisely what happens to reaction fuel 67 in reaction chamber 56. However, I have found that the larger molecules in volatilized fuel 66 appear to be broken into fragments with some type of reaction taking place. Specifically, I have found that a portion of the length of reactor 50 becomes quite hot, substantially hotter than could otherwise be accounted for from the thermal energy from exhaust 18 alone. This surplus thermal energy implies that some form of reaction is occurring in reaction fuel 67 as it is transformed into pretreated fuel 68. For example, in one prototype of the invention, the end of the exhaust conduit 16 positioned adjacent the end of reactor 50 closest the exhaust manifold 30 maintained a temperature of between about 500°-700° F. The portion of exhaust conduit 16 positioned along the central portion of the reactor 50 had a temperature between about 600°-900° F., while the position of the exhaust conduit 16 positioned adjacent the end of the reaction chamber where the volatilized alternate fuel entered was at a temperature between about 200°-300° F. Thus, the position of the exhaust conduit along the central portion of the reactor 50 reached temperatures higher than would be expected from the temperature of the other position of the pipe. Pretreated fuel 68 is directed into intake manifold 29 where it becomes the fuel source for internal combustion engine 20.

The change over from starting fuel 24 to pretreated fuel 68 is accomplished by the careful adjustment of valves 26, 84, 57, and 42. In this manner, the operation of internal combustion engine 20 is smoothly transferred from sole reliance on starting fuel 24 to reliance entirely on pretreated fuel 68. Using the novel teachings of this invention, I have run internal combustion engine 20 on alternate fuel 60 selected from materials generally considered to be totally unsuitable as a fuel for internal combustion engine 20. These alternate fuels have included crude oil and recycled materials such as motor oil, paint thinners, alcohols, and the like. Also, such fuels having some water content have also been used. Many of these alternate fuels are waste products for which disposal is a significant problem. By being able to use such waste products as fuel, a major source of pollution is eliminated. Tests on the exhaust generated by the engine 20 burning the alternate fuels have indicated that such exhaust is much cleaner than exhaust normally generated by such engines when burning gasoline in normal manner (gasoline can be used in the system as the alternate fuel of the invention to operate the engine more efficiently and without significant pollutants in the exhaust).

The dimensions of the reaction chamber and the reaction rod are such that the rod forces the volatilized fuel to flow substantially along the wall of the reaction chamber. For a 350 cubic inch V-8 Chevrolet engine, a reaction tube of about one-half inch inside diameter is placed substantially concentrically in an exhaust pipe from the engine. The reaction rod has a diameter to leave a concentric space between the reaction rod and inside wall of the reaction tube of about 0.035-0.04 inches and the reaction rod is between about ten inches and twelve inches in length. Lighter fuels, such as gasoline, work with the larger spacing between the reaction rod and reaction tube wall and the shorter rod while the smaller spacing and longer length may be required for heavier fuels such as crude oil since the heavier fuels generally require more heating and velocity through the reaction zone. Similar dimensions have been found satisfactory for use with single cylinder engines such as those having up to about fifteen horsepower. The smaller engines seldom require a reaction rod greater in length than about four inches. Similar dimensions will be used with other internal combustion engines.

The various dimensions indicated are examples only and can vary, usually depending upon the type and size of engine, fuel volume required, and the type of alternate fuels to be used. The important thing is that the passage for the volatilized alternate fuel through the reaction chamber be such as to cause the reaction to take place to convert the volatilized alternate fuel to the reaction fuel which is satisfactory for operating the engine.

While the invention has been described in detail in connection with an internal combustion engine, the invention can be used equally as well and in similar manner with any fuel burning equipment. Thus, it can be used to treat material so it can be used in fuel for furnaces and boilers in place of the normal natural gas, fuel oil, or coal, or to power turbines in place of the normal kerosene or jet fuel. The reaction chamber can be positioned in the exhaust conduit, such as a flue or chimney, similarly as it is placed in the exhaust conduit from the internal combustion engine shown.

Rather than heating the reaction chamber with exhaust gases from the fuel burning equipment being powered, and such heating is presently preferred because such heating is integrally a part of the equipment used which appears to provide optimum results, the reaction chamber could be heated by other means. Such other means, however, should be arranged to provide similar heating and heat gradients as are provided by the exhaust gas.

Whereas the volatilization chamber is shown as heated by the exhaust gas, the volatilization chamber could be heated by other means or, depending upon the material used as fuel, the volatilization chamber might not be heated at all. The important thing is that the material to be used as fuel is volatilized in the volatilization chamber so the volatilized material is drawn into the reaction chamber. As used herein, the volatilization chamber does not have to be a chamber as such, but may be any means which volatilizes the alternate fuel. It could be a carburetor or an injection nozzle or other volatilizing or spray means. Further, it is not necessary that exhaust gas be combined with the volatilized fuel as it is in the embodiment described. It has been found that in most cases the invention works satisfactorily without exhaust gas in the volatilized fuel. In most instances the volatilization fuel will be drawn through the reaction chamber by a low pressure or a pump at the fuel inlet of the fuel burning equipment.

The fuel pretreater of the invention is a novel discovery in that it allows me to successfully operate fuel burning equipment using alternate fuels. As such, I am able to achieve several highly desirable goals, namely, the extraction of valuable energy from alternate fuel while at the same time removing alternate fuel from the waste stream; or, in the case of crude oil, using this material directly thereby eliminating the need to subject the same to the expensive and capital intensive refining processes.

The present invention may be embodied in other specific forms without departing from its spirit or essential characteristics. The described embodiments are to be considered in all respects only as illustrative and not restrictive. The scope of the invention is, therefore, indicated by the appended claims rather than by the foregoing description. All changes which come within the meaning and range of equivalency of the claims are to be embraced within their scope.

CLAIMS (18)

I claim:

1. A pretreater apparatus for pretreating fuel to provide a suitable fuel for combustion in fuel burning apparatus, the apparatus having a fuel intake system and an exhaust system, the improvement comprising:

- ☐ a volatilization chamber for volatilizating said fuel in said volatilization chamber;
- ☐ a heated reactor tube through which the volatilized fuel flows;
- ☐ a reactor rod mounted in the reactor tube around which the volatilized fuel flows as it flows through the reactor tube, the space between the reactor rod and the reactor tube through which the volatilized fuel flows forming a reaction zone; and
- ☐ inlet means for directing said reacted fuel into the intake system of the fuel burning apparatus.

2. A pretreater apparatus according to claim 1, comprising an exhaust conduit in fluid communication with the exhaust system of the fuel burning apparatus to receive exhaust from the fuel burning apparatus and wherein the heated reactor tube is mounted in the exhaust conduit and is heated by exhaust gases passing through the exhaust conduit.

3. A pretreater apparatus according to claim 2, wherein the reaction tube is mounted in the exhaust conduit so that flow of volatilized fuel through the reactor tube is countercurrent the flow of exhaust gases through the exhaust conduit.

4. A pretreater apparatus according to claim 3, wherein the volatilization chamber is heated.

5. A pretreater apparatus according to claim 4, wherein the volatilization chamber is connected to the exhaust conduit downstream of the reactor tube whereby heat from the exhaust gases heat the volatilization chamber.

6. A pretreater apparatus according to claim 5, including an exhaust bypass means for diverting a portion of the exhaust gas from the exhaust conduit through the alternate fuel.

7. The pretreater apparatus defined in claim 6 wherein said exhaust bypass means includes a bubble plate in said volatilization chamber for bubbling said exhaust diverted into said volatilization chamber.

8. The pretreater apparatus defined in claim 1 wherein said reactor tube is mounted coaxially and in spaced relationship in said exhaust conduit, and said reactor rod is mounted coaxially and in spaced relationship in said reactor tube, said spaced relationship between said reactor rod and said reactor tube forming the reaction zone.

9. A pretreater apparatus for pretreating an alternate fuel to provide a suitable fuel for an internal combustion engine, the internal combustion engine having a fuel intake system and an exhaust system, the improvement comprising:

- ☐ an exhaust conduit having a first end and a second end, said first end being connected in fluid communication with the exhaust system of the internal combustion engine to receive exhaust from the internal combustion engine;
- ☐ an exhaust plenum at said second end of said exhaust conduit;
- ☐ a volatilization chamber interposed in said exhaust plenum, said volatilization chamber receiving thermal energy from an exhaust passing through said exhaust plenum;
- ☐ an alternate fuel in said volatilization chamber;
- ☐ volatilization means for volatilizating said alternate fuel in said volatilization chamber;
- ☐ exhaust bypass means for diverting a portion of said exhaust from said exhaust conduit through said alternate fuel;
- ☐ removal means for removing said volatilized alternate fuel from said volatilization chamber;
- ☐ a reactor tube mounted in said exhaust conduit through which the volatilized alternate fuel flows;
- ☐ a reactor rod mounted in the reactor tube around which the volatilized alternate fuel flows as it flows through the reactor tube, the space between the reactor rod and the reactor tube through which the volatilized alternate fuel flows forming a reaction zone; and

☐ inlet means for directing said reacted fuel into the intake system of the internal combustion engine.

10. The pretreater apparatus defined in claim 9 wherein said exhaust bypass means includes a bubble plate in said volatilization chamber for bubbling said exhaust diverted into said volatilization chamber.

11. The pretreater apparatus defined in claim 9 wherein said reactor tube is mounted coaxially and in spaced relationship in said exhaust conduit, and said reactor rod is mounted coaxially and in spaced relationship in said reactor tube, said spaced relationship between said reactor rod and said reactor tube forming the reaction zone.

12. The pretreater apparatus defined in claim 9 wherein said alternate fuel is selected from a hydrocarbon other than a conventional fuel, said hydrocarbon being selected from the group consisting of crude petroleum, used paint thinner, used motor oil, and organic solvents.

13. The pretreater defined in claim 12 wherein said alternate fuel includes a supply of said alternate fuel.

14. The pretreater apparatus defined in claim 9 including control means for selectively controlling each of said exhaust bypass means, said removal means, and said inlet means.

15. A method for pretreating an alternate fuel to make it usable in fuel burning equipment comprising the steps of:

☐ selecting an alternate fuel;

☐ placing said alternate fuel in a volatilization chamber;

☐ volatilizing said alternate fuel;

☐ pretreating said volatilized alternate fuel by passing said volatilized alternate fuel through a reactor tube with a reactor rod mounted therein to form a reaction zone between the reactor rod and the reactor tube, said reactor tube being heated to produce a pretreated alternate fuel; and

☐ directing said pretreated alternate fuel into the internal combustion engine.

16. The method of claim 15, including the step of heating the reactor tube by mounting the reactor tube so that exhaust from the fuel burning equipment heats the reactor tube.

17. The method of claim 16, wherein the step of volatilization of the alternate fuel includes the step of volatilizing the alternate fuel in a volatilization chamber and heating the volatilization chamber with exhaust.

18. The method defined in claim 17 wherein said pretreating step includes controlling the pretreated alternate fuel to the internal combustion engine.

Referenced by 40+ other inventors (or their examiners/lawyers)

Inventor	Title	Citing Patent	Year
Hytec Fuel Delivery, Inc.	Preheat fuel delivery system	US6415775	2002
Kioritz Corporation	Four-stroke cycle internal combustion engine	US6484701	2002
Ise Research Corporation	System and method for transferring heat from exhaust gasses to compressed gas fuel	US6557535	2003
Mark S. Lahti	Preheat fuel delivery system	US6581582	2003
Plasmadrive, Inc.	System for improving the fuel efficiency of an engine	US7104224	2006
Jeff Davis	Natural gas engine supply method and apparatus	US7131432	2006
Plasmadrive, Inc.	System for improving the fuel efficiency of an engine	US7194984	2007
Plasmadrive, Inc.	System for improving the fuel efficiency of an engine	US7469688	2008
Dennis Lee	Pre-ignition fuel treatment system	US7487764	2009
Plasmadrive, Inc.	System for improving the fuel efficiency of an engine	US7934489	2011
Herng Shinn Hwang	Catalytic EGR oxidizer for IC engines and gas turbines	US8061120	2011
General Electric Company	Swirlers	US8171734	2012
Yenbu Makine Sanayi Ve Ticaret A.S.	Fuel preheating system	US8360770	2013
Herng Shinn Hwang	Catalytic engine	US8397509	2013
Raymond L. Peterson	Fuel pretreater	US8397699	2013
Robert Hull	Internal combustion engine	US8590516	2013
Thrival Tech, LLC	Coherent-structure fuel treatment systems and methods	US8794217	2014
Ini Power Systems, Inc.	Method and apparatus for efficient fuel consumption	US8810053	2014
Discovery Fuel Technologies, Llc	Oxygenate compound synthesis device, systems including the device, and methods of using the same	US8991368	2015
Thrival Tech, LLC	Coherent-structure fuel treatment systems and methods	US9145803	2015
Ini Power Systems, Inc.	Flex fuel field generator	US9175601	2015
Ini Power Systems, Inc.	Flexible fuel generator and methods of use thereof	US9188033	2015
Jonson Clarence Hugh	System for improving the fuel efficency of an engine	US20040187802	2004
Jeff Davis	Natural gas engine supply method and apparatus	US20050199225	2005
Jonson Clarence H	System for improving the fuel efficiency of an engine	US20060096573	2006

Inventor	Title	Citing Patent	Year
Jonson Clarence H	System for improving the fuel efficiency of an engine	US20060283428	2006
Jonson Clarence H	System for Improving the Fuel Efficiency of an Engine	US20070186875	2007
Dennis Lee	Pre-ignition fuel treatment system	US20080041350	2008
Herng Shinn Hwang	Catalytic Engine	US20080302104	2008
Dennis Lee	Pre-ignition fuel treatment system	US20090038591	2009
General Electric Company	Swirlers	US20090255265	2009
Yenbu Makine Sanayi Ve Ticaret A.S.	Fuel preheating system	US20100167221	2010
Innovative Energy Solutions LLC.	Internal combustion engine	US20100258094	2010
Peterson Raymond L	Fuel pretreater	US20110108011	2011
Jeffery Pruitt	Fluid Recirculating Economizer	US20120024498	2012
Discovery Fuel Technologies, Llc	Oxygenate compound synthesis device, systems including the device, and methods of using the same	US20130220239	2013
Ini Power Systems, Inc.	Flexible fuel generator	USD733052	2015
Wayne K. Glew	Fuel supply system for an internal combustion engine	EP1470331A1	2004
Lincoln Evans-Beauchamp	External compression two-stroke internal combustion engine with burner manifold	WO2010044873 A1	2010
Yenbu Makine Sanayi Ve Ticaret A.S.	Fuel preheating system	WO2010073125 A2	2010
Yenbu Makine Sanayi Ve Ticaret A.S.	Fuel preheating system	WO2010073125 A3	2011
Mirabella, Laura	Motor means	WO2010146307 A1	2010

Also worth reading: GEET Patent by Korean inventors Lim Soonja and An Seungbae: http://worldwide.espacenet.com/publicationDetails/biblio?CC=WO&NR=02053901&KC=&FT=E&locale=en_EP (International and South Korea versions inside).

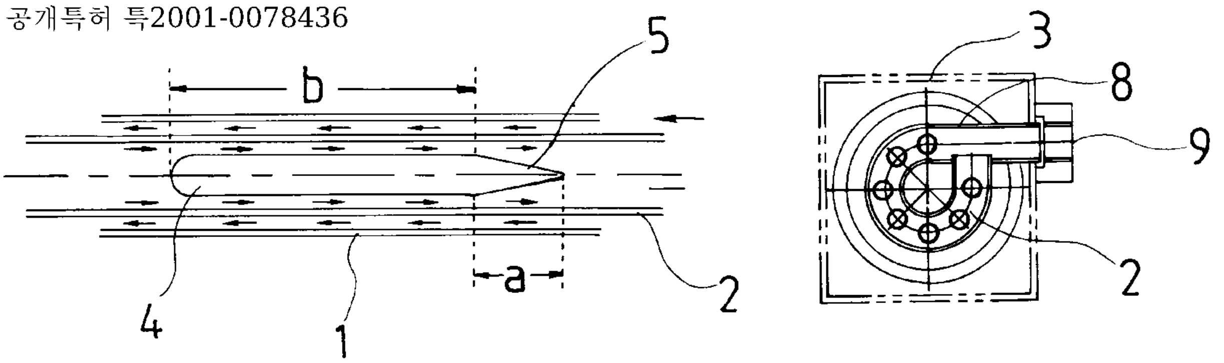

Ion Separation in a Moving Fluid

Hypothesis about the origin of the intense magnetic field observed in a Pantone reactor

By **Marc C.,** posted online Sept. 5, 2006; text translated from French by Ozzie; source: http://quanthommesuite.pagesperso-orange.fr/systpantoneparmarc.htm

1. Introduction

I have read and heard many things about phenomenon(s) at work in the Pantone reactor. On forums, many critics of the Pantone Patent highlight the famous "magnetism of the rod" to shout *"That's impossible!* " Obviously they didn't take the time to analyze or even less to try something, but still they say *"It will not work"…*

The contributions of each other, and a study conducted by a laboratory equipped with measuring equipment worthy of its name, should nevertheless allow the future to provide a theory that meets the observed facts.

I should mention here that my physical chemistry knowledge is antediluvian[199] and my calculation methods rather "personal". And in terms of fluid mechanics I assume my total ignorance. I apologize in advance to the purists.

2. To Critics

If you are dishonest, I prefer to chew you work. Cut and paste the text below in your favorite forum, and return to save the world. The figures given here are only the sum of arbitrary assumptions, abused in rough approximations. I just hope to advance the "thingy" and reduce its small "magic" character to a phenomenon that begs to be explained and quantified. This is essential if we are to ever achieve optimal industrialization of the process…

3. Hypothesis

As an electrician, I am interested primarily in the phenomenon of "magnetization of the rod" referred to by many experimenters. Latest Quanthomme[200] site inputs regarding "water vapor from the electrifying" and "vortex" led me to consider what would be the rules of ionised water vapor swirling.

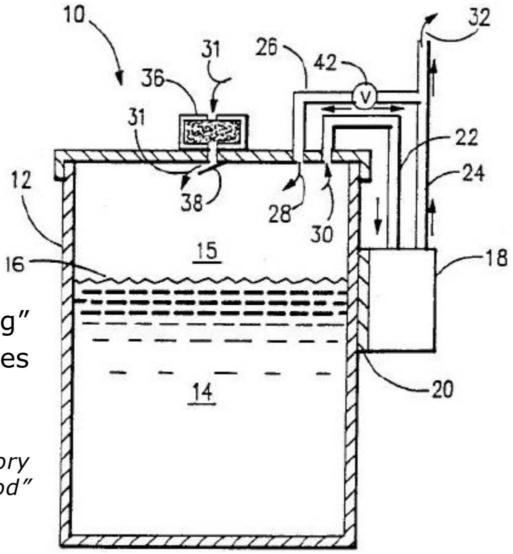

Image: US Patent № 4952340 "Vibratory ion vapor generator and method"

---

[199] Ancient (origin: it literally means "before the Flood" from Biblical time).

[200] He's referring to the website given above, which has many GEET discussions and replication tips in the French language.

Papers posted by Mr. R.J.[201] show a device with most of the features of the bubbler: heating, mixing, pressure control… It is logical to think that in the output of the bubbler some of the steam comes out ionized.

Consider that the reactor shaft causes severe turbulence which cause the rotation of the ionised water vapor around this rod. It comes down to model all gas/rod with a good old solenoid at the heart of the reactor:

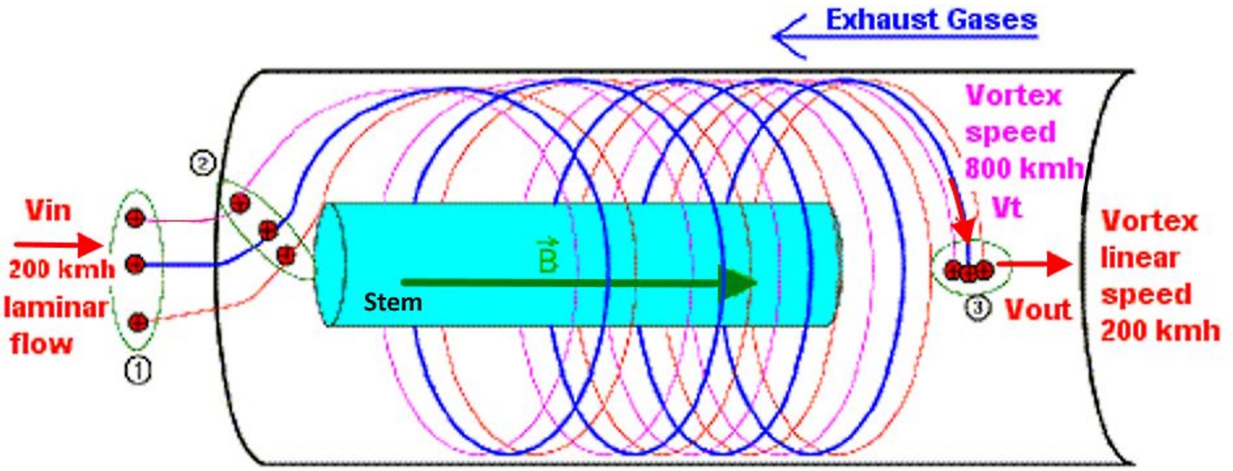

(c) Marc C. 2006

For simplicity, I will assume that only negative ions are admitted into the reactor. Also recall that only part of the water vapor is effectively ionized.

Note that the ions of the same charge repel each other, thus automatically providing a 'safe space' between each molecule of the same sign… The first ionized molecule somehow "trace" the way for others… This is in my opinion the same phenomenon that makes it more homogeneous mixture in the cylinders of the engine, the fuel+air ions distributing "equidistant" each other before combustion, and usually include too much air on one side and too much fuel on the other…

4. Approximated Calculations

Suppose that the rod of the reactor is surrounded by an equivalent quantity of steam to 1 µg of water, swirling at high speed.

Water having a molar mass of 18 g/mole, calculate the number "n" of molecules present in 1 µg of vaporized water:

$$n = \frac{10^{-6}}{18} \times 6{,}02.10^{23} \approx 33.10^{15}$$ molecules

---

[201] Here he's referring to a GEET analysis by R.J., an engineer from ISAT (Institut Supérieur de l'Automobile et des Transports) – "Institute of Automotive and Transport Engineering" which is a state-run engineering school; www.isat.fr

Suppose 10% of these ionized molecules negatively, hence the charge "Q" equal (in absolute value):

$$Q = \frac{n \times 10}{100} \times 1{,}6.10^{-19} \approx 5{,}3.10^{-4} C$$

Suppose that the gas velocity "V" at the outlet of the reactor reaches 200 km/hour:

$$V = \frac{200}{3{,}6} \approx 55{,}6 m.s^{-1}$$

The stem of the reactor measures L = 20 cm. The average travel time "t" of the ion cloud around the rod is:

$$t = \frac{L}{V} = \frac{0{,}2}{55.6} \approx 3{,}6 ms$$

The current one can infer "I" equivalent to this ion cloud:

$$I = \frac{Q}{t} = \frac{5{,}3.10^{-4}}{3{,}6.10^{-3}} \approx 150 mA$$

Ions swirling around the rod (vortex), can be assumed to travel n = 50 turns around the rod before exiting the reactor.

Note in this case that the "vortex" is corresponds to s stationary supersonic-speed vacuum system, with more heat input exhaust gas; where there are interesting phenomena to study mechanically: cavitation, resonance, etc.… Probably responsible for the observed sonoluminescence, which in turn further ionizes the gas mixture.

Suppose the core essentially contains iron (μr = 104). On the magnetic level, induction in the center of the rod is:

$$B = \mu_0 . \mu_r . \frac{n.I}{L} = 4\pi.10^{-7}.10^{4}.\frac{50 \times 0{,}15}{0{,}2} \approx 0{,}47 T$$

This calculation only approximate the results of induction value just around… half a Tesla.

The result is still surprising when you consider that in the original study the presence of an electric current in the reactor was not suspected! (Even if it is not credible, I said that I did not choose my data based on the result to get, but this calculation is my only test. Yes Yes…)

We can have fun to change the above data at will, using a spreadsheet by changing the mass of water, ion proportion, speed or number of laps covered by the "cloud steam" along 20 cm.

However, pay attention to the phenomenon of magnetic saturation of the iron that makes it difficult to exceed the Tesla value. But if the phenomenon of "credit card demagnetization" is not a myth, as many consider that the iron has no effect in the magnetization at this level of induction (B >> 1T), and return to μr = 1, as a coreless coil.

Hypothesis from the study of the Pantone reactor

By **Marc C.,** posted online Sept. 16, 2006; text translated from French by Ozzie;
source: http://quanthommesuite.pagesperso-orange.fr/separionfluidmouv.htm

1. Introduction

It must be recognized that the phenomenon of the Pantone reactor is irritating for scientists: how can a simple plumbing assembly improve the performance of a heat engine? Also we are dealing with a kind of "black box" with a strong padlock and if you want to place the measuring instruments, the spell is broken… It is easier for the scientist to shout like superstition than to look.

In the previous article above, I proposed a plausible interpretation of the origin of relatively high magnetic field present at the heart of the reactor (the famous "shuttle" or "rod"). In my mind, magnetism was only a consequence of the operation, without real effect on the engine. Now I have the courage to propose a model leading to the dissociation of certain molecules present in the Pantone reactor. Can we say that water cracking can occur as well? I let you think for yourself…

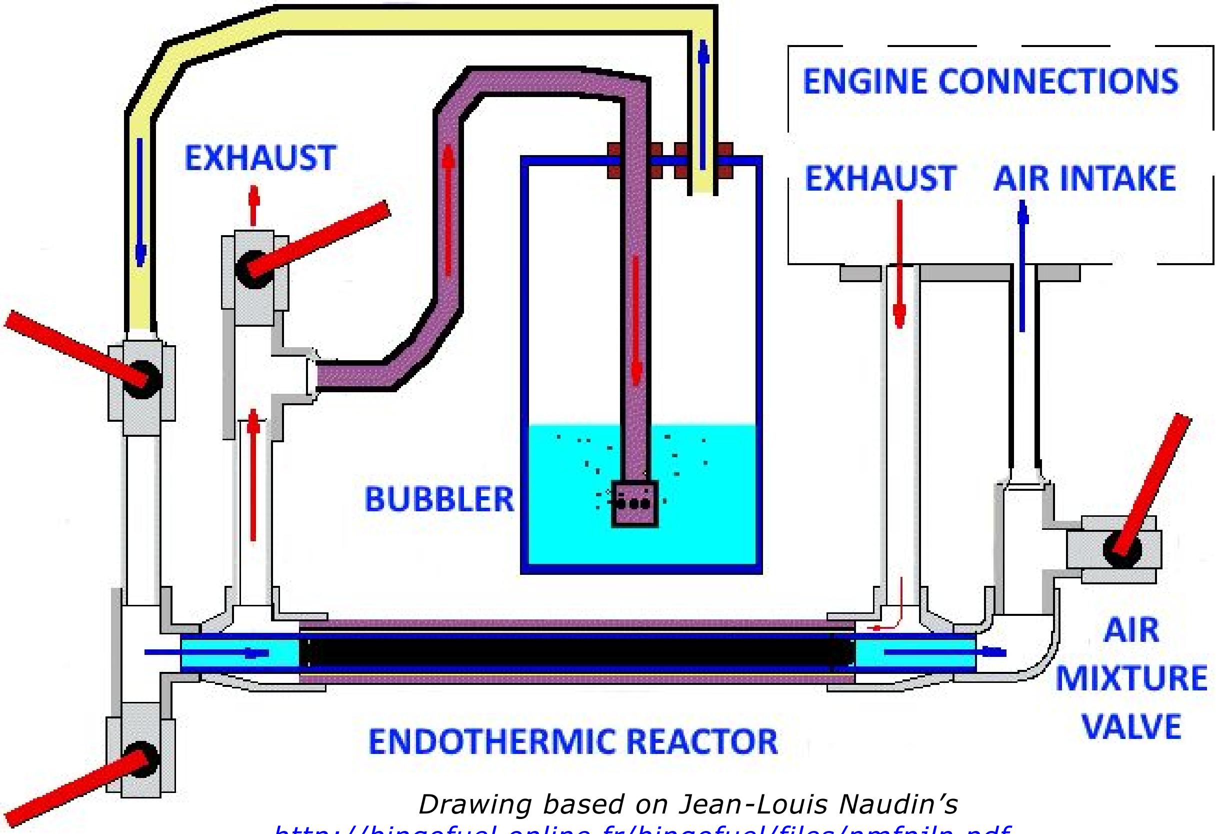

Drawing based on Jean-Louis Naudin's
http://bingofuel.online.fr/bingofuel/files/nmfpjln.pdf

Furthermore, this model can be transposed to the AVEC[202] system, and by extension to any system with ion movement… Planet Earth included!

Finally, I started thinking "magnetic fuel savers" as well as fluorescent tubes, which are based in my opinion on a similar principle.

Good reading !

2. Hypothesis (erroneous) of Laminar Flow

I should start with this chapter, next time…

When I became interested in the Pantone system (about a year ago), I initially assumed that the molecules of air, water, fuel (except for system "G") moved at a constant rate so they accelerated while approaching the rod, but they retained a linear path along said rod. Having no serious knowledge of fluid mechanics, I had no idea what it means to a turbulent flow.

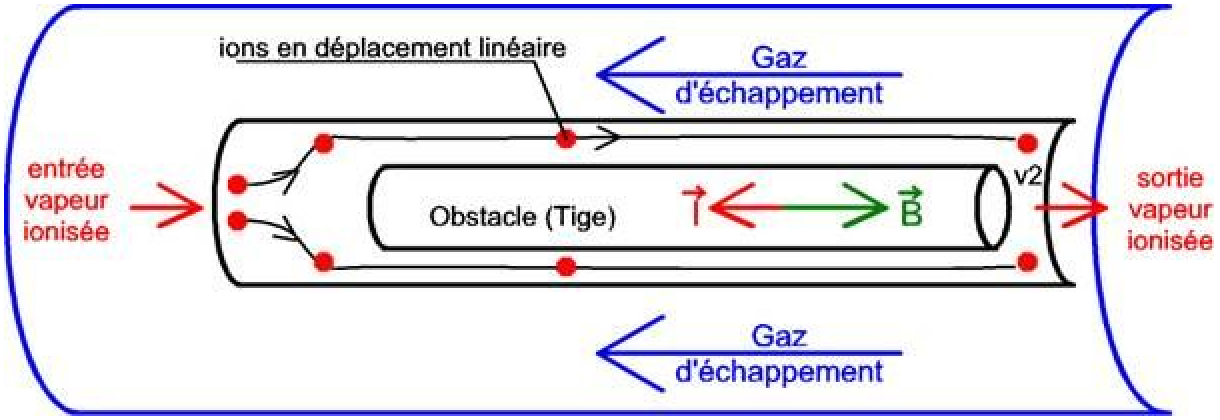

In this case, the flow of ionized molecules, supposed negative charge (for convenience) creates an electric current resulting parallel to the reactor field lines. The vectors I (current) and B (induction) are collinear (zero vector product) and therefore produce no Lorentz force (see below). Moreover, we find no explanation there for the mysterious magnetization of the rod, which resulted in many jeers from skeptics… Yet some reported seeing "glued" objects on reactors in operation http://quanthomme.free.fr/pantone/usa/PMC3.htm

However a minimum of reflection and common sense leads to the conclusion that in this reactor, the life of ionized molecules, vacuumed and heated "in white", is far from being a bed of roses… but I would not plagiarize *{names of forum contributors here}* - I highly appreciate the comments! Without their explanations and the valuable contributions of the site Quanthomme, I couldn't have achieved this synthesis.

---

[202] AVEC is an abbreviation for ***Air + Vortex = Economiseur Carburant*** (Air & Vortex Fuel Saver) inspired by achievements in Belgium and France with a single "VortexValve™" which reportedly reduced fuel consumption by 25%.

3. Hypothesis (incomplete) of the Turbulent Flow

Then one day… I discovered the now famous vortex (see page dedicated to experiments with AVEC http://quanthommesuite.pagesperso-orange.fr/Realisationsavec2006.htm), as well as explanations on steam electrification (http://quanthommesuite.pagesperso-orange.fr/electrisationvapeureau.htm). So I came to imagine a turbulent flow of ions, which then generates a magnetic field (see previous paper).

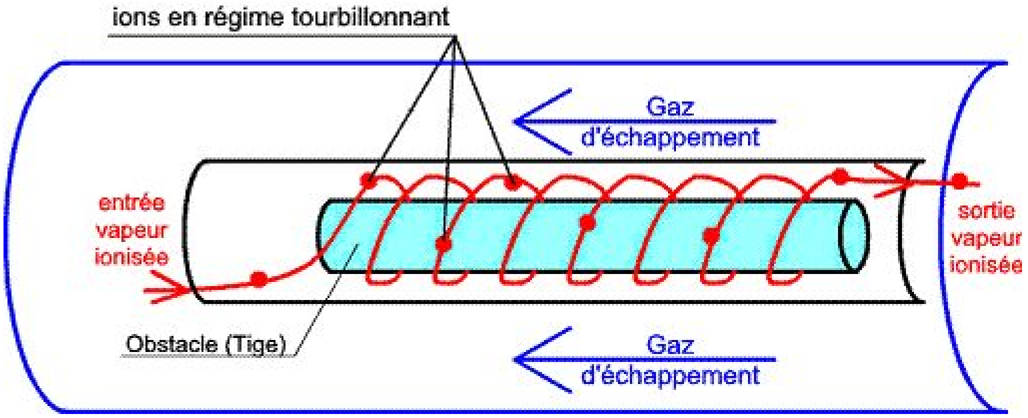

In this case, negative ions revolve around the core, remaining at a distance from each other by mutual repulsion (all of the same sign), and the displacement of the total load becomes equivalent to an electric current flowing in a conductor. The rod becomes the core of a solenoid (or electromagnet).

A calculation – albeit approximate – possible to obtain an induction of about 0.5 Tesla in a soft iron core, with only one-tenth of ionized steam microgram turning 50 times around a 20 cm stem before leaving the reactor to 200 km/h.

4. And the positive ions?

But the above hypothesis satisfied me only in part because it was based on a crude subterfuge: I had mentally “filtered” positive ions to keep only negative… Not a very scientific approach. Shame on me !

And thus that remorse tapped me to the point that I have to issue a denial:

- Actually the reactor treats positive ions, too, it does not discriminate!

- Better yet, this is probably the key to its operation!

- And in deference to critics, Mr. Pantone’s suggestion to “roam” the reactor in the north-south axis is far from stupid! It is time to rehabilitate this genius *(heck, I’ll make enemies)*…

5. Let's Simplify

Ultimately, in my opinion, the reactor uses to its advantage MHD[203] dear to Mr. Jean-Pierre Petit (www.jp-petit.org), so simple and yet so misunderstood!

This is the transposition of flows per Laplace's Law, using the famous "Rule Of Three Fingers" which is electricians' favorite.

dl is a conductor element traversed by current ***I***, moving in a magnetic field induction ***B,*** turns into force ***dF*** in the following manner:

$$d\vec{F} = I d\vec{l} \wedge \vec{B}$$

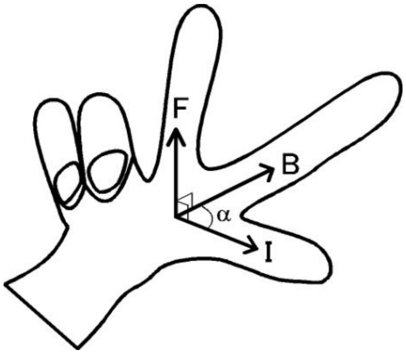

The force will be maximal if ***dl*** and ***B*** are square (α = 90 °). This is the principle used in most electric motors.

Now replace the conductor and current by an ion which moves around the rod.

In this case, it is more convenient to replace the Laplace law by its less known electrostatic counterpart – the **Lorentz Law:**

$$\vec{F} = q\vec{V} \wedge \vec{B}$$

Where the current is replaced by a particle of charge ***q,*** driven with a velocity ***V:***

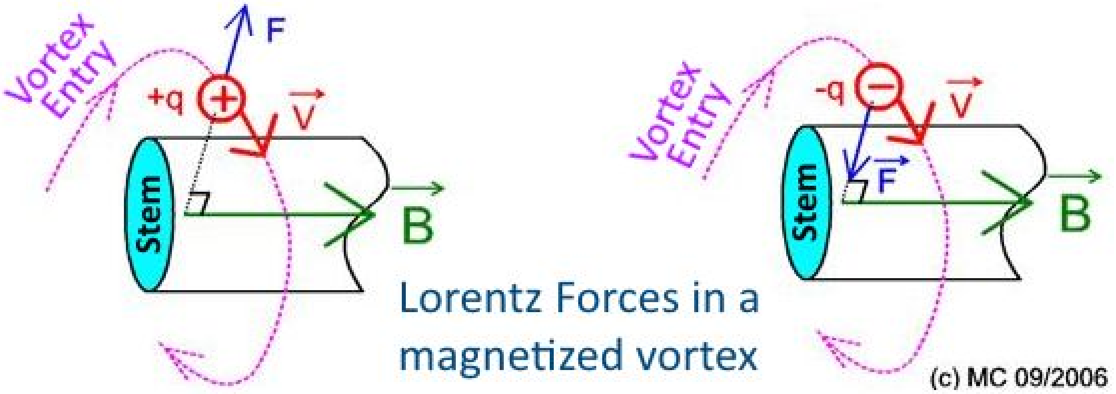

Lorentz Forces in a magnetized vortex

(c) MC 09/2006

---

[203] Magneto hydrodynamics

A positive ion traveling (left) generates the equivalent positive current, moving tangentially to the shaft. The direction of this current follows a near 90 ° angle relative to the induction vector B. It is therefore subjected to a force which tends to move away from the stem.

This is called electrodynamics effect in an electromagnet, the coil tends to move away from the core under the effect of induction that spawned it. This coil may even explode, if the wire is thin in terms of the active force!

…And as of course, no electrician is stupid enough to leave the transformer to "explode", we forget that the conductor might run away. The ion can do so without difficulty. I ignored this fact in my previous article.

But this is where the fun starts… It is when we replace a positive ion with its negative counterpart, which runs through the same trajectory as the equivalent current becomes negative.

Well, it's amazing if you compare the two situations, it seems that the reactor does not support the ions in the same way? So we come to a basic conclusion:

In this configuration, the positive ions will be "thrown out" against the reactor wall, while the negative ions rub themselves against the inner shaft…

Naturally, simply reverse the vortex or the orientation of the stem, to have an opposite result.

6. My Theory on The Reactor Principle

In principle, the Pantone reactor sucks:

- Hydrocarbons (except our famous system "G"),

- Air (more or less stale unfortunately, but that is not the issue…)

- The water vapor.

A portion of the molecules is stable, another is already ionized, another consists of negative and positive ions "glued" together by electrostatic attraction: hydrocarbons for example?

Refer to the drawing below, where:

- In red, the ions present in the mixture are sucked into the reactor inlet (probably among others, hydroxide and hydronium ions; regarding steam electrification see (http://quanthommesuite.pagesperso-orange.fr/electrisationvapeureau.htm).
- In pink are shown the complex molecules (hydrocarbons, water…?), "generally neutral" but with a "dipole moment" allowing them to move in an electric field, and could "break" into two smaller ionized molecules.

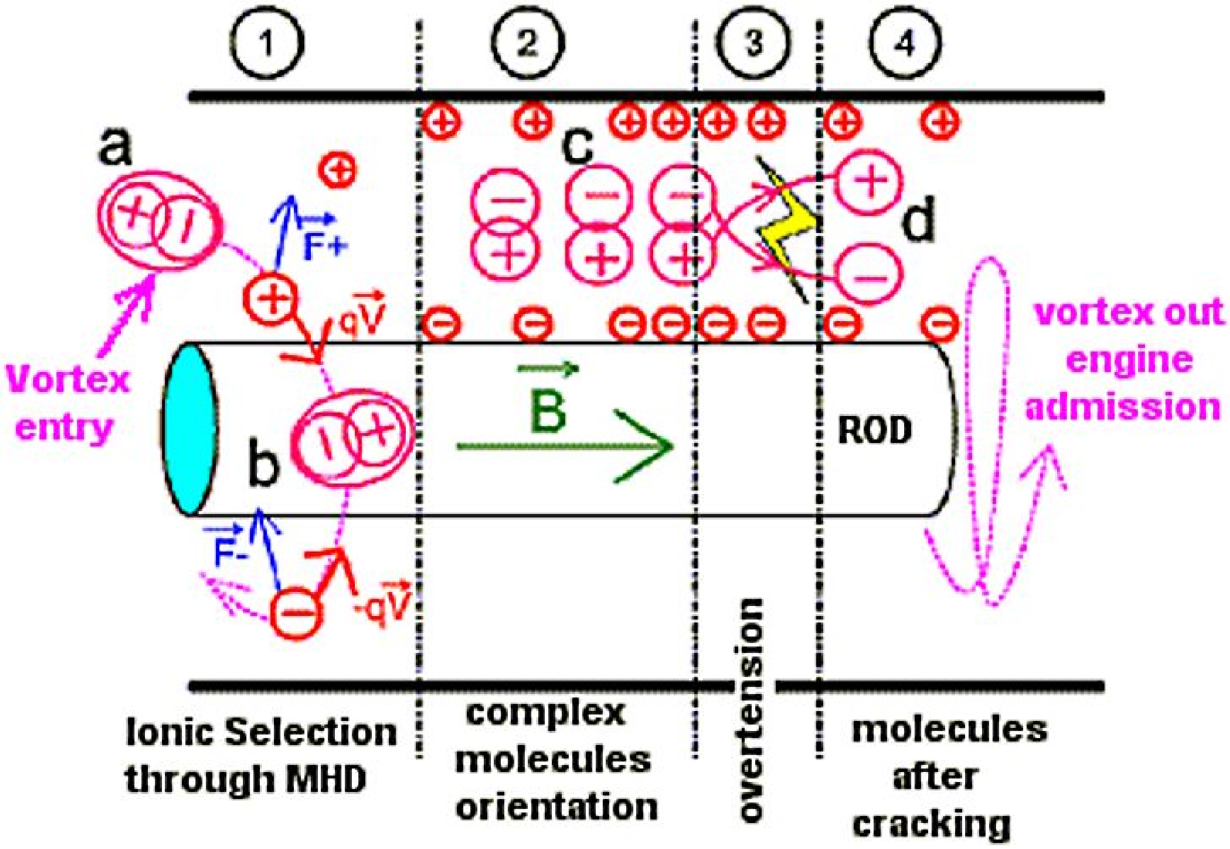

This scheme may seem hard to decipher: let’s take it step by step.

In the heart of the reactor (exhaust tube not shown) “work” is done in 4 phases:

(1) The ions are divided into two layers: some are pressed against the tube, the other against the stem. And it turns and rubs it, and it heats (via the exhaust)! As against the complex molecules (a) and (b) allow themselves blissfully wear in the vortex, just turning their positive (or negative) to negative ion (or positive) the closest.

Note that at startup, it is the residual induction of the reactor which decides on the distribution tube/rod. Consequently, it includes the famous recommendation of Paul Pantone who made treat quack ”align the reactor in the North-South axis.” This facilitates the “start” of the process by imposing an induction initially. Especially if the core is not magnetic…

(2) electrification full swing, the inner surface of the tube is covered with negative charges, while the stem is increasingly positive. This distribution is selected arbitrarily, simply reversing the direction of the vortex or the remnant flux density of the rod to have the opposite. Can we distinguish the reactors’ positive rod “of those” negative rod “?

The complex molecule (c) is “torn” between the plates of “capacitor” formed by the rod + tube. Covalent strength is barely sufficient to maintain internal cohesion of the two ions. It lacks a “flick” to separate.

(3) The accumulation of charges is such that the dielectric breakdown limit is reached: as soon as a molecule through the middle of the field (recall that rarefied atmosphere is there because of the intake depression), it promotes then the conduction electrons: there initiating an electric arc between the rod and the tube. The local temperature is well over 3000 ° C.

• Some say they have measured rod temperature higher than exhaust fumes. This hypothesis goes in this direction.

• By the way, what temperature is needed to "crack" a water molecule in a depression of 800 mbar?

(4) The complex molecule (c), received in (d), found divided into two ions during the spark. But why these "crossed" paths on the diagram? Just because these new ions are in turn subject to the law of Laplace, and will rub "like the others" on the overheated metal. Thus metal surfaces electrify again… until the next arc.

In a traditional electrolysis there is indeed a "quartering" of the water molecule between the two electrodes, but I do not find this phenomenon of "tipping" the contrary ions join the electrodes, hence the appearance of an effect joule and a polarization artifact (fuel cell) which heavily penalizes the energy balance (~ 50%). Pantone reactor optimizes dissociation, its performance is superior to that of conventional electrolysis.

Needless to say, the ions that have undergone such training, must find good soft conditions to be made to them, once achieved in an engine cylinder. But this is another story…

7. Additional Notes

Skeptics will say that I exaggerated the effectiveness of the process as mentioned in the arc (3) cannot occur. For two main reasons:

- On one hand the rod and tube are generally connected to the same potential. Indeed, electrons can "bypass" the " Lorentz Barrier" following the metal contact points between rod and tube: I actually recommend the use of an **insulated** rod!
- The charge density on the surface of the tube and rod is low, since the ions of the same sign tend to repel each other.

This argument is false: the ions rotating in parallel are mutually attracted by electrodynamic effect, each ion bathing in the stream sent by its neighbor →

Electrodynamic effect on the Vortex, in Pantone Reactor

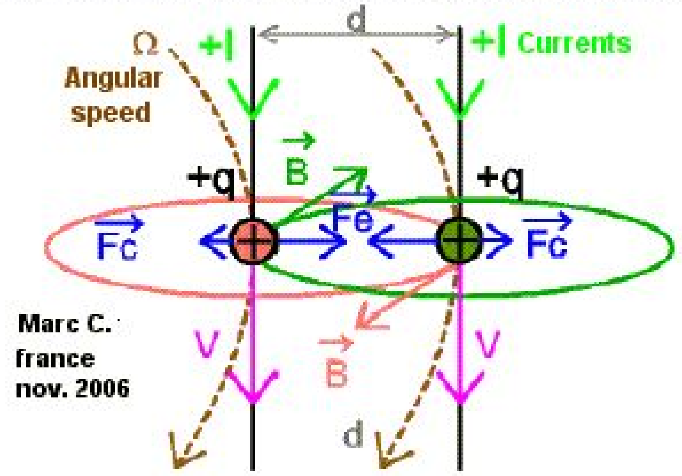

The Coulomb force (Fc) is inversely proportional to the distance d between the "windings" of the vortex. It guarantees a "safe distance" between these turns.

But it is supplanted by the electrodynamic force (Fe) which increases with the speed V, itself dependent on Ω speed. The tightening of the turns is thus automatically until Fe = Fc.

When I made my initial hypothesis of a swirling flow (see note 3), I sensed that the ions were following a helical path imposed "by construction," without really being able to define…

After a few days of reflection, the pieces of the puzzle are in place more clearly. The following model should explain things better:

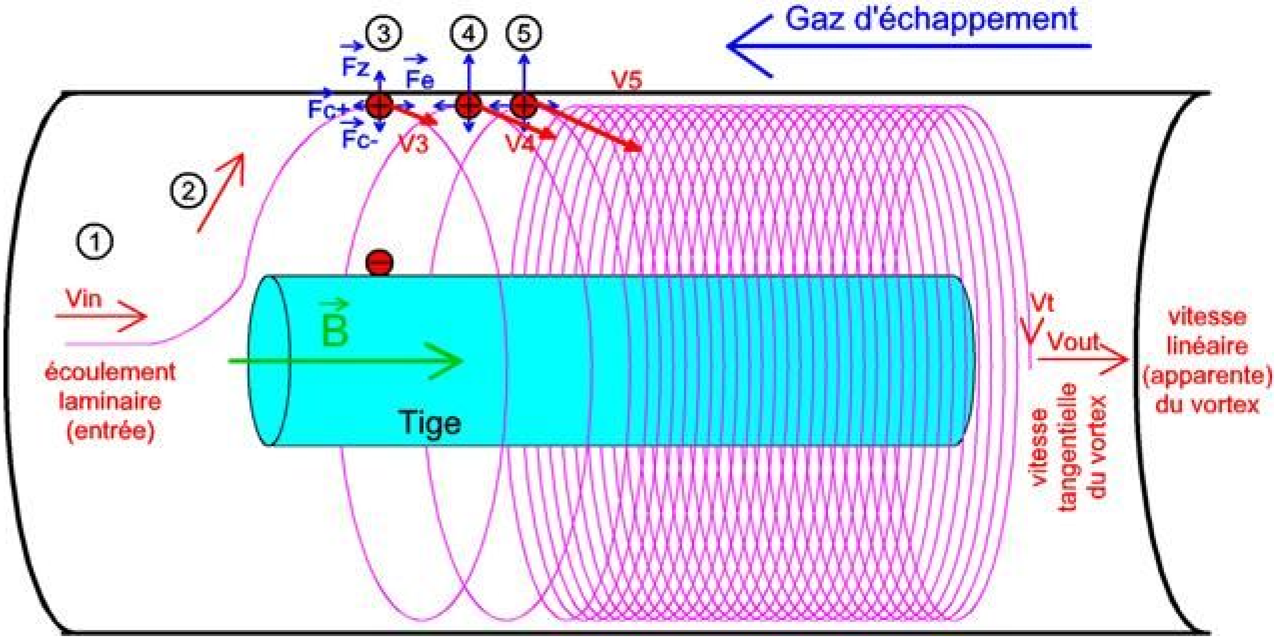

(2) Reactor inlet: there is laminar flow velocity Vin, probably a little different from the "linear" speed or "apparent" Vout. It essentially depends on the engine's vacuum.

(3) The ions enter the rod field. The positive ions are "plated" on the tube wall by the Lorentz force.

(4) A positive ion is subjected to four forces tending to change its trajectory:

- **FZ: Lorentz force.** It is the one that keeps positive and negative ions apart. It makes sure they rub against metal (tube or rod), improving heat exchange.
- **Fc: Coulomb force.** Antagonist to the Lorentz force above, but very low due to the remoteness of the ions (+) and (-). Negligible.
- **Fc +:** Coulomb force tending to move the positive ion away from the same sign ions (4) therefore "turns" cannot touch!
- **Fe electrodynamic force** (see illustration above). It increases with the speed of ions. And that's good, because their speed is increasing.

Indeed, we recall that the ions (+) rub against the superheated tube wall, communicating their thermal energy.

According to the laws of thermodynamics, thermal energy that communicates a random movement to the ions, causing neighboring molecules to collide in a disorderly manner, thereby increasing the pressure inside the tube (entropy principle).

I've always wondered why the reactor was depressed while, according to the heat balance, the pressure should have it increase dramatically! Yet there is virtually no increase in pressure: if the pressure in the bubbler flows back then nothing would work!

The cause: the ions can escape "in disorder" because they are indeed firmly held "on track" due to the four forces shown above.

Also, the ions have no choice but to accelerate in the direction of existing rotation, converting the thermal energy into speed, and secondarily kinetic energy…! In doing so, they draw heat to the exhaust gases, which cool down.

This is the secret of the effectiveness of the Pantone reactor:

A conversion of nearly 100%, from thermal energy into mechanical energy!

If only Carnot[204] could see it now!

Recall that this energy is mostly taken from the exhaust gases, considered a loss by engine manufacturers. They use it to "burn the unburned" in the catalytic converter. Finally, this pot is useless as a Pantone reactor puts out very few pollutants.

Losses in a traditional mechanical system is irreducible, it is generally considered that the performance of a device increases with its size. This small scrap assembly shows us that it is time to revise our judgment: the poor performance of gigantic turbines of the utility company is capped at 50%. Half of the energy produced by a thermic power plant "goes up in smoke" (or clouds for a nuclear power plant)! Shame the 21st century…

And that's not all: remember that this "ion cloud" swirling around the stem, is equivalent of a coil traversed by a current. But this current does not cause Joule effect because it does not flow in a conductor! Dear physicists, Paul Pantone has provided an ideal laboratory instrument:

A wire coil "infinitely thin" for "contiguous turns" and… induction without joule losses!

Based on this principle, it should be possible to achieve high power magnets with small size, without resorting to expensive superconducting technology!

Recall that the technique of magnetization by steam (mentioned earlier) has been known since the nineteenth century, but has so far remained at the stage of laboratory curiosity, lacking explanation…

---

[204] Nicolas Léonard Sadi Carnot (1796-1832), often described as the "Father of Thermodynamics".

8. Summing It All Up

8.1. Ion Turbulent Flow

Where it gets "crispy" is that this model is applicable to any system with ions "turning" around an axis. The whirlwind coming from the AVEC system equipping your vehicle, as well as the atmosphere of our good old Earth!

Thus, most of the air contours of vehicles are made of flexible or rigid plastic material known for its electrostatic properties. The simple airflow at high speed through a filter and hoses is sufficient to slightly charge ions.

According to fluid mechanics, the ions were there before booting the vortex, in laminar flow and therefore possess a kinetic energy according to their mass ($mV^2/2$). A mass equal, the ions closest to the stem should acquire a higher speed. However, they do not! This is the paradox found in several vortex assemblies. An example from the document on the "Ranque effect" *{the Ranque-Hilsch vortex effect mentioned earlier in this chapter}*:

> ***"Normally, the principle of conservation of angular momentum tries to keep the rotation speed of the internal flux greater than that of outer stream so that momentum is conserved. Since these speeds are equal, that part of clean energy is also part of the initial vortex. According to the technicians of Vortex Corporation, this energy ends up as heat in the first part of the jet leaving the tube. And at the same time, the whirlwind that reverses direction is cooled in proportions which can be considerable: it depends on the internal profile of the tube. Such is the explanation given by the American engineers, but they themselves recognize that it is not enough to provide a complete interpretation of all the phenomena involved."***

With the model used here, it is understood that the positive and negative ions simultaneously rotate as they are "coupled" through complex molecules "broadly neutral" but feature a "dipole moment" and that an electrostatic bond is maintained between the rod and the tube. All the molecules thus rotated, finally moving like a nut turning around the screw!

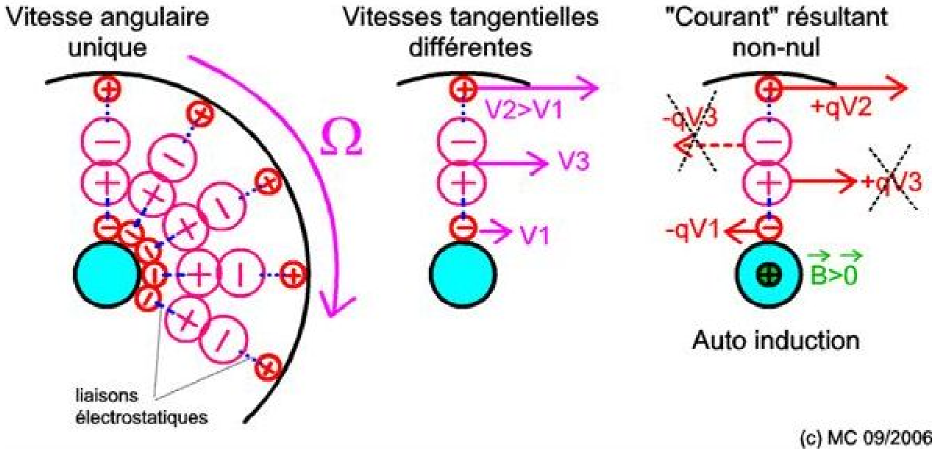

(c) MC 09/2006

Ions and molecules have certainly all the same angular velocity, but those located towards the center (here "-") have a tangential speed V1 lower than V2, ions in the periphery (here "+"). Loads intermediate half-molecules, too close, see their respective influences cancel since they are subject to the same speed V3.

Finally, we note that, even considering a statistical balance the number of positive and negative ions in the vortex, the speed difference of positive charges (V2) and negative (V1), generates the equivalent of a current electric (here positive) which would travel one turn around the core… the heart of the vortex is therefore the core of the coil, and is the seat of an induction… which strengthens the initial magnetic field.

Note that, to "prime" the ionized vortex, just a very weak magnetic field, which is then reinforced by the separation and renewal of ions.

An unbalanced distribution of originally ions give the same result without initial induction. Or in a WITH editing is at the periphery of the vortex that molecules can lose or gain electrons by rubbing against the pipes. A load imbalance is present by construction.

8.2. Examples of Application of the Theory

The Earth's Magnetic Field

It is attributed to the existence of only the Earth's core, but researchers are struggling to offer a viable model. Instead of searching in the ground, what if we looked into the sky? The rotation of the upper layers of the atmosphere could lead this field: at the equator, the tangential speed of the ionosphere, located more than 7,000 km from the center of the Earth, reach 1800 km/hour!

Note that the moon lacks an atmosphere, has no internal magnetic field… One more point to make a base for this theory.

"Dual-Temperature Plasmas"

It can be illustrated in a fluorescent tube: the electrons flowing at the center of the tube are subjected to high temperatures (5000°C is a current value), while the positive ions located at the periphery of the tube, remain "cold".

The explanations of how this common lighting are not entirely satisfactory: evasively we speak of "containment" of "no collision" due to the "relative vacuum." The fact remains that these electrons seem to outrageously violate the laws of physics, they would inevitably join the positive ions if they were subject only to the Coulomb force! The puzzle is solved when one considers the spontaneous appearance (?) of a vortex that will ensure an "ionic partitioning" by self-induction…

8.3. Laminar Flowing Fluid

More and more vehicle users resort to fuel savers 'magic' that clip onto the gasoline or Diesel line, unfortunately often prohibitively expensive. For houses, for ages now they've being proposing anti-tartar systems to fix the water pipes.

Again, our well-meaning censors trust leading experts, who tell them: "Trickery! A magnet has no influence on fuel or limestone!" Indeed…

Unlike the Pantone or AVEC system, where one presupposes the existence of ions, I had to accept that complex molecules can themselves be broken down into ions under the influence of Lorentz forces. Now that you know their existence, it's anyone's guess what will happen in a complex molecule, walking in a straight line in a magnetic field perpendicular to the motion:

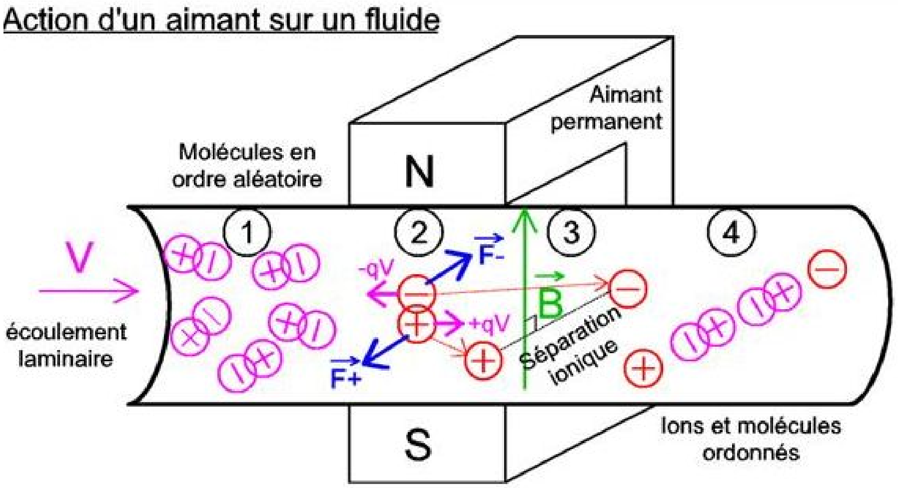

(1), complex molecules leave walk at the same linear velocity ***V*** in a huge disorder.

At (2), each molecule is subjected to Lorentz forces which direct this molecule perpendicular to flow and tend to break the covalent bond of two ions within it.

At (3), separate ions are "plated" on the opposite walls of the tube by the magnetic field. Even when they leave the magnetic field, they remain distant by electrodynamic effect: in fact each ion moves in a magnetic field emitted by the counter ion moving at the same speed:

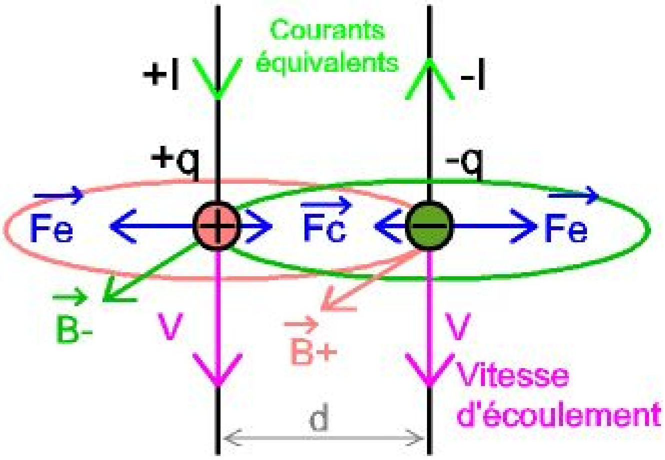

In our case, the distance ***d*** is the section of pipe, the ions (red) being "clad the walls" under the joint action of the magnet and the speed (see the illustration above).

Fe electrodynamic repulsion force is generated by the movement of the ion in the magnetic field generated by its opponent force. It is inversely proportional to the distance ***d*** (pipe section) and increases with the speed ***V***.

If the speed ***Fe*** is sufficient this force exceeds the electrostatic attraction force ***Fc*** (Coulomb force), which is independent of the speed and inversely proportional to the square of ***d.***

At (4): the ions are far apart, the attraction force between them is low. The recombination of these ions is unlikely. Also nearby molecules, like dipoles they align their opposite sign sides facing the ions and maintain a balance. It can last "a while" even in the absence of flow (valve closed).

Naturally, the initial disorder gradually resume its rights. But the effect will last long enough, since water heater owners have well noted the lack of scale in their hot water pipes. Remember that each time the user opens the tap, the electrodynamic forces repel the ions that would close again…

9. Conclusion

"There is nothing new to be discovered in physics now;
all that remains is more and more precise measurement."
Lord Kelvin, a pillar of thermodynamics (1892)

I wonder why nobody had made such assumptions, yet within reach of a first grader. Maybe because they also believed that it was "impossible" and were afraid to waste time studying the problem seriously?

Or simply because the MHD is an area now fallow. Now considered obsolete, it has been studied in the past (until the 1980's) in hope of achieving quiet electric propulsion for boats or airplanes. Under these circumstances, only the laminar flow has been studied: the distribution of positive and negative ions by the Lorentz force is known for sure, but it was then considered as a simple consequence of the current flow in the fluid. Also one of the advantages of MHD propulsion is to completely eliminate turbulence – regardless of the speed! The turbulent phenomena have therefore simply been ignored.

I also think that this theory can provide answers to some "inconsistencies" experimentally observed in circulating fluids, but for which no one could make an explanation: pressure fluctuations, temperature, flow…

This study is still incomplete. I admit it is badly lacking in numerical values. So each reader can make their own opinion. They can experiment and modify where necessary their Pantone reactor AVEC, or to confirm or refute this theory…

This up to us putting it together that we can hope for progress.

Good tinkering all!

Marc C., France

Validation Tests by JLN[205] Labs

Source: http://bingofuel.online.fr/bingofuel/mfptsten.htm
http://bingofuel.online.fr/bingofuel/pmcjlnen.htm

Tests of a lawn mower retrofitted with the GEET Multi-Fuels Processor

October 21 2000, by Jean-Louis Naudin

I was pleased to test myself and this for the first time, a lawn mower driven by a 4-stroke engine retrofitted with the Multi-Fuels Processor invented by Paul Pantone. All the parts used are standard and come from do-it-yourself stores and/or hypermarkets (plumbing department). The parts were selected to be closer to the original plan published freely by Pantone on the Internet on 11-11-99. On the next page you will find the diagram of my current setup under tests which gives me whole satisfaction. The bubbler is a simple metal can of 5 liters.

The assembly of the unit was carried out so that the machine can be used in real conditions of use (shearing of grass).

Description and basic principles of the endothermic plasma reactor (by Jean-Louis Naudin) :

The heart of the Multi-Fuels Processor of GEET is a self-inducing plasma generator or a plasma reactor with endothermic reaction. The endothermic reactor is composed of two coaxial steel cylinders:

1. The interior cylinder (threaded at each end) called the pyrolytic[206] chamber (430mm length and 15mm of inner diameter) contains a steel rod of 300mm length and 13mm of diameter (not magnetized before the burning-in). A side of this steel rod is round in order to identify its magnetic polarity after its disassembling. The rod is maintained in the center of the pyrolytic chamber with to 3 small nipples welded at each end.

2. The external cylinder (threaded at each end) is a steel tube of 300mm length and 26mm of inner diameter.

---

[205] Jean-Louis Naudin: www.jlnlabs.com

[206] Pyrolysis is a thermochemical decomposition of organic material at elevated temperatures in the absence of oxygen. Derived from the Greek: *pyro* “fire” + *lysis* “separating”.

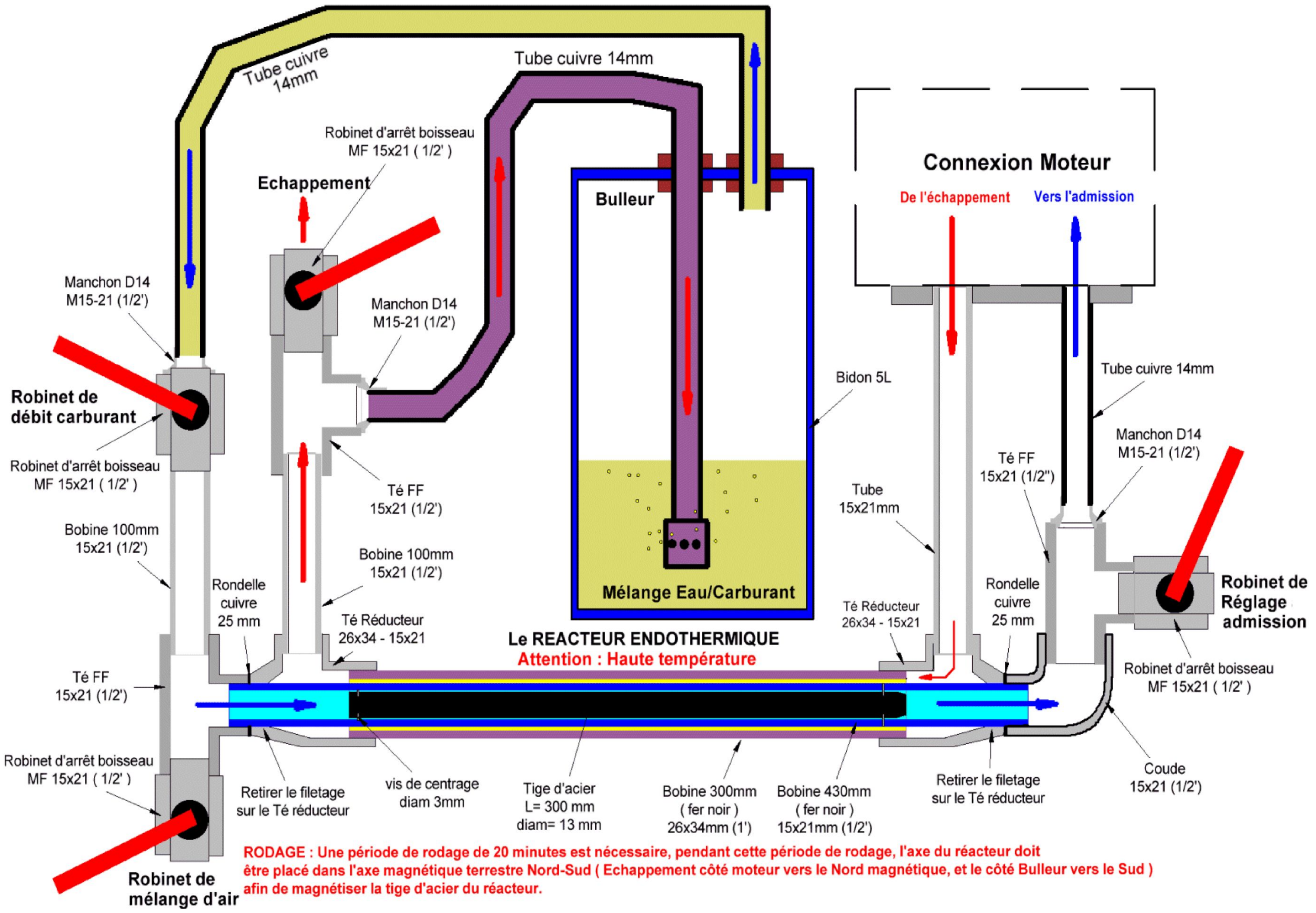

RODAGE : Une période de rodage de 20 minutes est nécessaire, pendant cette période de rodage, l'axe du réacteur doit être placé dans l'axe magnétique terrestre Nord-Sud (Echappement côté moteur vers le Nord magnétique, et le côté Bulleur vers le Sud) afin de magnétiser la tige d'acier du réacteur.

The two cylinders are placed coaxially with two reducing T's (see diagram) placed at each end. The bubbler is a tank containing a mixture of water and hydrocarbures (gasoline, diesel, kerosene, crude oils and others derived from hydrocarbons).

The hot gas flow coming from the exhaust of the engine circulates through the outer part of the reactor with a strong kinetic energy that contributes to bring up to very high temperature the steel rod (being used as heat accumulator) contained in the pyrolytic chamber. The gases cross the engine and then go through the bubbler containing the water/hydrocarbures mixture. The vapor of the mixture is strongly sucked by the vacuum created by the engine intake and is pushed by the pressure coming from the exhaust. The kinetic energy of the vapor is increased considerably by the reduction of the diameter in the pyrolytic chamber (by Venturi effect). The combined effect of the high temperature and the increase of the kinetic energy produces a thermochemical decomposition (molecular breakdown) of the water/hydrocarbures mixture.

The endothermic reactor forms an Electro-Plasma-Chemical (EPC) unit and it is now possible to create a high-output fuel coming from the decomposition of the water contained in the water/hydrocarbures mixture. This fact is confirmed by the presence of oxygen gas (O_2) in great amount measured in the exhaust.

A close view of the Intake/Exhaust connection of the engine

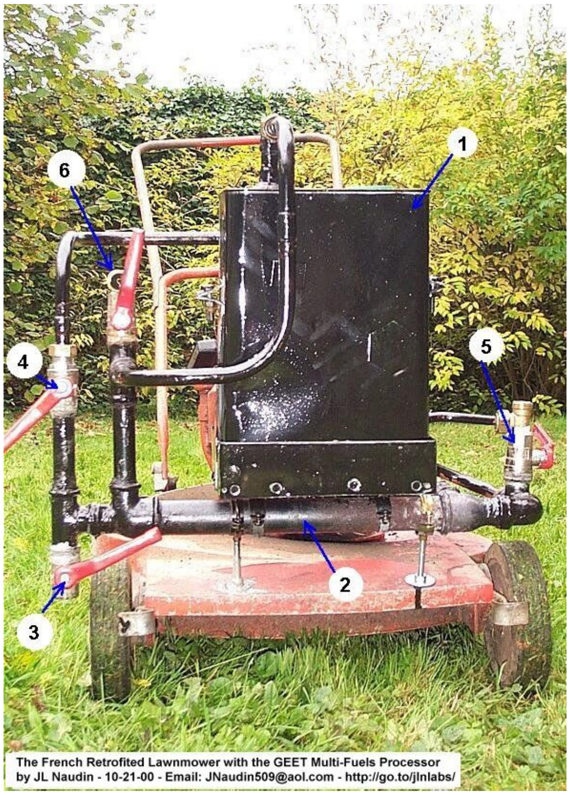

One break-in period of at least 20 minutes with pure gasoline (95LL[207]) is necessary. The mower was placed so that the axis of the endothermic engine (2) was aligned with the North-South terrestrial magnetic axis[208]. The hot side of the reactor chamber (engine exhaust) was placed towards the North, and this in accordance with the recommendations of Paul Pantone. After this break-in period, the tests of the mower started.

---

[207] There is not such grade in most countries; I guess he's referring to ethanol-free unleaded gasoline of 95 octane.

[208] Clarification: such orientation is necessary for the break-in period only. ~Ozzie

A first successful test was carried out with pure gasoline 95LL, then a second test successful with a mixture of water 50% and gasoline 50%.

← A more surprising test was carried out with 75% of WATER and 25% of gasoline (95 LL).

The retrofitted lawn mower ran very well in real condition of use…

Starting was done without a problem (like a normal mower) with simply a small fuel injection at the input of the admission valve (5) before launching. It is necessary to wait approximately 1 minute so that the engine reaches its optimal operating temperature (approximately 800°C). After this period of temperature setting, the engine of the mower is able to run at full speed. The max turn speed is obtained with the adjustments of the valves (3), (4) and (5).

The exhaust gas are very clean and not very odorous.

On 10-22-00, I fully confirmed that this lawn mower retrofitted with the GEET Multi-Fuel Processor is able to run very well with 75% of water and 25% of gasoline.

Additional comments: The main real interesting fact about the GEET Multi-Fuels processor is that this device is able to use any kind of hydrocarbures like crude oils, methanol, gasoline, various solvents, kerosene, bio-diesel mixed with water, etc.

Today, I can only say that the GEET Fuel processor works VERY WELL on my own retrofitted lawn mower according to the original Pantone diagram and observations:

- ✓ The exhaust emission of the retrofitted engine is far less and cooler than standard engines,

✓ The device operate on unconventional fuels,

✓ The retrofit system replaces a conventional carburetor.

This device is not a water engine but a 4-stroke engine (a LAV35 Tecumseh, 3.5 hp) which runs with its own multi-fuels miniature refinery on board… Very useful for anyone who wants to use any source of hydrocarbures…

FUEL CONSUMPTION TEST

October 28th, 2000, by Jean-Louis Naudin

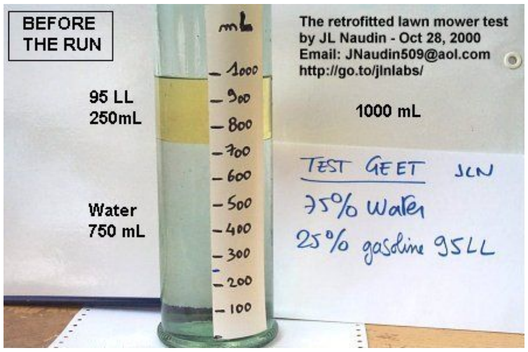

The purpose of this test is to:

- Measure the fuel consumption by the lawn mower engine (a 3.5-hp from Tecumseh, model LAV35).
- Measure the quantity of water used by the engine.

As seen in the photos: the fuel used was a mixture of 75% of water (750 mL) and 25% of gasoline 95LL (250 mL); the fuel mixture was put in the bubbler of the lawnmower retrofitted with the Pantone reactor; the engine was run at full speed for 8 minutes, 20 seconds (500 sec).

After the run, the remaining mixture was measured→

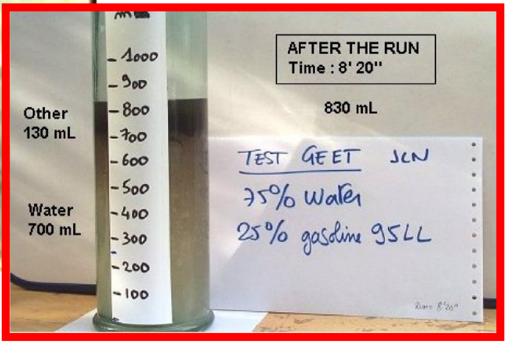

Results *{recalculated by Ozzie}:*

- After a 8' 20" run at full speed, 830 mL were left from the initial 1000 mL of the water/fuel mixture.
- The engine used 127.5 mL of water and 42.5 mL of gasoline.
- The consumption of fuel MIXTURE was, per calculation, 20.4 mL per minute.
- Out of this, the consumption of GASOLINE was 5.1 mL per minute; that's 0.306 litre per hour; or 0.081 gal/hour (or 0.067 UK gal/hour).

Chapter 31.
EMERGING: Schauberger, Kanzius — Turn Water to Gasoline?

Overview

This chapter presents to you a branch of science that DOES fall under the broad definition of "Waterfuel" yet it's very different in its approach. It seems like this method of creating gasoline-like water has nothing to do with Brown's Gas or Ohmasa Gas and similar works because no electricity is applied, and also because it does not produce gas but **A COMBUSTIBLE LIQUID made from water**; however, as you've seen in the first chapter, water has so many unknown sides that maybe there's a direct connection to Brown's Gas or another popular Waterfuel method that we have yet to uncover.

In any case, at least one famous scientist, Viktor Schauberger, says this method should work. Reader discretion advised. But first, let's understand where this scientist is coming from. And why is it here in the "EMERGING" division? Because, even though developed back in the early 1930's, we haven't seen this technique used anywhere, neither past nor present, but may very well see it used in the future.

Who was Viktor Schauberger?

And why was not a single word mentioned about Schauberger in all my years of schooling???

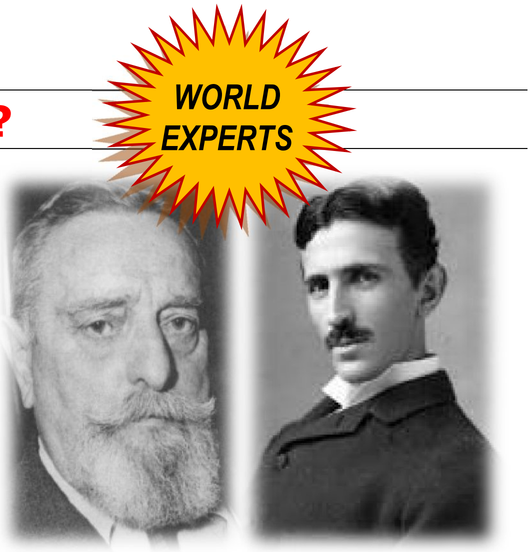

Schauberger *Tesla*

The answer to the second question lies where the same answer lies about Nikola Tesla (second photo) missing from all school textbooks! I can only tell you what I DO know about Schauberger and his work – and the history of modern science will say its final word about him later on.

Viktor Schauberger (1885-1958, complete bio at http://schauberger.co.uk/bio/) was an Austrian forest caretaker, naturalist, philosopher, inventor and experimenter in ***biomimicry – science and engineering based on imitating nature.*** For EXAMPLE, he explained why he believed that aerodynamic and hydrodynamic engineers had incorrectly designed the propeller:

> ***"As best demonstrated by Nature in the case of the maple seed aerofoil, today's propeller is a pressure-screw and therefore a braking screw, whose purpose is to allow the heavy maple seed to fall parachute-like slowly towards the ground and to be carried away sideways by the wind in the process.*** No bird has such a whirling thing on its head, nor a fish on its tail. ***Only man made use of this natural brake-screw for forward propulsion. As the propeller rotates, so does the*** resistance rise by the square of the rotational velocity. ***This is also a sign that this supposed propulsive device is unnaturally constructed and therefore out of place." ~Schauberger***

Were propellers and ship screws chosen – over Schauberger's – with the purpose of WASTING FUEL? Just another coincidence??? What do you think? *(~Ozzie)*

Who was Viktor Schauberger

By Morten Ovesen, the Malmö group

> ***"A brief biography could be like this: Viktor Schauberger was an Austrian forester who was active during the first half of the 19th century. He had a huge beard and a friendly laughter, this he combined with an uncompromising belief in himself and his ideas. He was obstinate in combination with a choleric temper. He was a good drawer and probably a skilled craftsman. Even though Viktor was not schooled the academic way, he had a deep knowledge in biology, physics and chemistry. His sense and understanding on how water flows in nature was exceptional. From his observations he formulated his new hydrodynamic basic theory. His friends and opponents described him as highly intelligent and with this intellectual sharpness he made a deep cut in his (and ours) physical paradigm."***

This is an excerpt; read this complete bio at www.vortex-world.org/viktorschauberger.htm

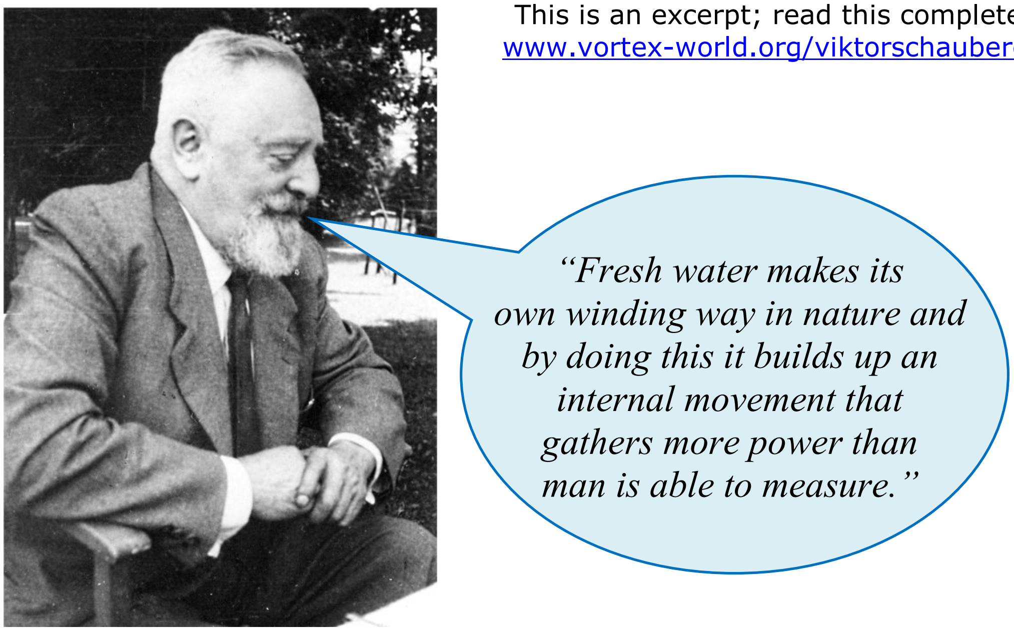

PETROL [GASOLINE] FROM WATER

Article by Viktor Schauberger, translated and edited by Callum Coats, from the 1993 Special Edition of Mensch und Technik (Man and Technology); writing date unknown, with editor's notes from 1936. According to the history of his experimentation, Schauberger was turning water into electricity and into gasoline during 1931 and 1932 (respectively) if not earlier.

I find this article fascinating. If you replicate this method WITH WORKABLE RESULTS, please let me know and I'll republish this article with your replication tips. (~Ozzie)

Take a well-insulated, preferably egg-shaped vessel made of clay or failing this, an oak-barrel, which as far as possible shields against the influences of external temperatures, but which neither impedes the respiration of the vessel, nor disturbs its diffusive functions. A three-element jet impeller[209] is rotated (screwed into the water) inside the vessel, the upper portion being made of copper and the lower of a metal of opposite polarity, such as silver.

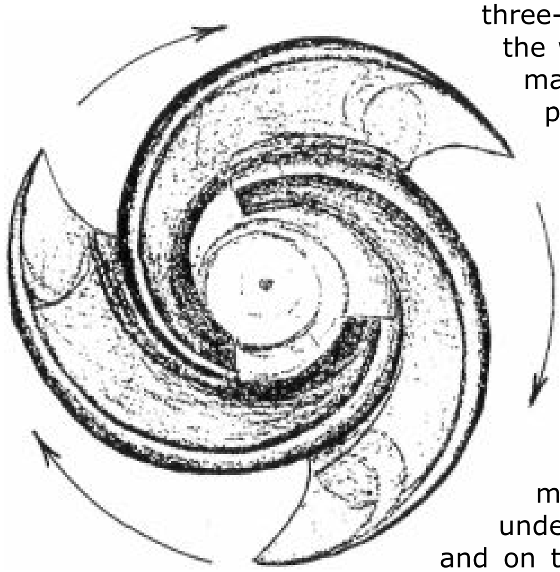

← This image of a 3-element impeller is from another Schauberger article. Unfortunately this article has no known illustrations, so we can only guess that this is the 3-element impeller he's referring to in the paragrapgh above. I'm guessing a similar one sould be developed per his detailed description below. (~Ozzie)

The openings themselves must be of as small a bore as possible and of a screw-form configuration, so that on the one hand the mechanical coherence of the gases forced through under the highest practicable pressure is guaranteed and on the other hand, a very strong atomization takes place, when the gas exiting from the lower nozzle enters the upward-curving egg-profile under a strong drop in temperature.

The surfaces of the systems of jet nozzles are reciprocally configured dimensionally. The three nozzle-openings narrow towards the exit-opening in the same ratio[210]. The lower series of nozzles is half the size of the upper.

Immediately above and below the two thrust-producing elements, which must be well-insulated externally, adjustable thrust deflectors are mounted inside the egg form, which can be set closer together or further apart in order to be able to regulate the evolving differences in potential.

---

[209] Rotor used to increase (or decrease in case of turbines) the pressure and flow of a fluid or gas.

[210] The ratio here is probably that of the "Golden Mean" or "Fibonacci ratio" = 1 : 1.618033988

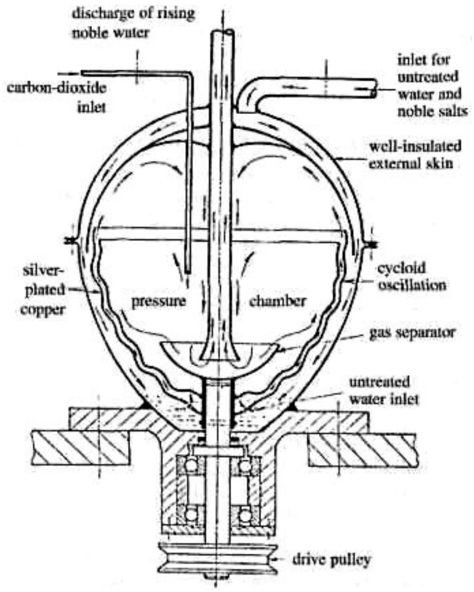

These thrust-emitters are also to be insulated externally, so that the direction of their respective electrons is safeguarded. They must also be made of bipolar metals; the simplest solution being to silver-plate the copper elements or to put a layer of copper-oxide on the silver components[211].

The most essential aspect in this regard is that these elements begin to emit rays under the reciprocal influence of temperature and that an animalistic[212] current flows. This ionization, wherein hydrolysis[213] plays a decisive role by means of high-tension and complex absorptive processes, is of crucial importance for it is during these processes that the analyzing and synthesizing electro-osmotic events have to take place.

The barrel or unglazed, earthenware vessel[214], which should be as egg-shaped as possible, will now be filled with well-insolated[215] seawater or thoroughly insolated or acidified fresh water, preferably rainwater. The successful outcome depends on the degree of solar irradiation and acidification. Lack of sunshine can be remedied by the addition of hydrogen peroxide, etc., but this does necessitate irradiation with a quartz lamp. The simplest is solar irradiation. The starting temperature of the water should be between +12°C (+53.6°F) and +17°C (+62.6°F).

Into this insolated water very small quantities of silver or zinc, or copper filings, should now be added. Eventually these can also be applied to the nozzle lining and around which the entering gas will flow. In this case, the particles or laminates must be small enough not to block the nozzle openings.

The relative proportions between these two metals of contrasting polarity has to be determined empirically. In addition, small quantities of brown coal in the form of cubes, phosphates of salt, a little magnesium or other substances, such as can be found in all

---

[211] As there are no accompanying diagrams in the translated article, the image is a rough estimation; more research required. Keywords: Repulsator, repulsine (in Russian: РЕПУЛСИН).

[212] Animalistic: in the manner of an animal; savage; untamed.

[213] Hydrolysis signifies the decomposition of a substance by the combination of one of its elements with one of those in water.

[214] This shape is akin to the **gulla,** which Viktor Schauberger describes as follows: "The people of ancient cultures made use of the so-called 'gulla' for storing their liquids. This mysterious vessel maintains the freshness and vitality of every liquid, be it water, milk, etc. Fabricated under very curious ritualistic practices, the gulla was formed out of clay with high aluminum content. The basic shape of the gulla was the pentagon, the ur-form *{basic or original form}* into which the lump of clay was shaped before being turned on the potting wheel into the naturalesquely shaped vessel. If such a basic clay form is stood on its natural base, then the naturalesque egg-shape is created, in which the bi-fifth triangle plays a decisive role in respect to its hypotenuse *{the side of a right triangle opposite the right angle}* and side in relation to the radius, whereby the RPM of the wheel and the resistance to oscillation of the shaping hand has also to be taken into consideration. The function of the finished vessel, with which it is known the ancients cooled lukewarm water in hot sand under the rays of the midday Sun, depends on the skill applied to these internal and external influences as the naturalesque egg-shape was rotating." [Source: Implosion Magazine, № 115, pages 62-63].

[215] Insolate (verb): to dry in, or expose to, the sun's rays; to ripen or prepare by such exposure.

springwater, must be introduced into the water. These salts, however, should not have been overly exposed to daylight.

As additives, sulphurated water and the addition of a little nitrate of potash increase the performance of the end product. The more varied the additives, the better and the higher the quality of the final mixture. Because the changing seasons often have a decisive effect on the whole, the relative proportions of these additives must also be determined empirically.

Once all this has been done, the vessel is then closed and sealed against the entry of light and air. Then a dash of carbon dioxide and a dash of air or oxygen are introduced alternately, the former from above and the latter from below, but in such a way that no pressure is created in the interior.

The C-acid gas[216] introduced from above lowers its temperature and will be rapidly absorbed by the cooling water. Once this ionized gas mixture has been inhaled by the water, as it were, then a dash of oxygen is injected, whose dispersal must be confined within the water only, concentrating itself in the upper strata of the water. This results in the development of a stratified, self-densifying, spacial[217] structure from the bottom upwards, through which the carbon gases coming from above have to diffuse.

If the process proceeds correctly, then an extremely strong vacuum forms in the space above the water, which atomizes and cools the follow-up CO_2 even more, giving rise to the necessary intensification on the one hand and the creation of the polarity between the gas and the water on the other.

Under this reciprocal intensification the introduced substances begin to dissociate, during which process the water temperature slowly drops to +4°C (39.2°F). This temperature level must be maintained by injecting the gases alternately during which the pressure gauge fluctuates slightly. This is a sign that the water has begun to breathe and pulsate properly. Should over-pressure occur, it is indicative of a progressive development of heat, whereas an under-pressure signifies a strong increase in CO_2.

Here the danger of an explosion is incipient[218], which can be averted if the temperature of the water can be maintained at +4°C (+39.2°F). This can be regulated simply by adjusting the inflow of oxygen. The addition of very small quantities of oil or other fatty matter increases the valence of the mixture, but also the danger of explosion. For this reason the introduction of these substances is not advisable at the beginning.

If no reactions of any kind are evident, and if all the ingredients have been completely dissolved, then the mixture should be allowed to stand for about two hours, during which time the temperature must always be maintained at +4°C (+39.2°F). This is most easily achieved in a cellar where such temperatures prevail. Where a good cellar is available, however, the whole thing can be simplified, because the process described above need only be inaugurated with a few alternating injections of O and CO_2. The whole [contents] can then be left to ferment, a process sufficiently well-understood in the preparation of wine or cider. In this instance, however, in the initial stages of the process, the contents should be stirred around gently with a well-insulated mixing device on which a zinc or silver scoop has been mounted on one side and a copper one on the other. The external closure can be effected[219] with a mercury seal or by the insertion of a compression ring.

The content of introduced CO_2, however, must exceed 90% and proportions similar to those found in the water of all good mountain springs must exist in the end mixture,

---

[216] C-acid gas: carbonic acid gas otherwise known as carbon dioxide.

[217] Spacial (also: Spatial): from the word 'space' – something that has to do with space.

[218] Incipient: just starting to be or happen; beginning.

[219] Effected: brought into existence.

although here we are concerned with substantially different products of solution than those found in springwater. In principle, however, there is no difference between them.

In this regard it is necessary for those substances that have evolved under the influences of light to be decomposed in darkness and a drop in temperature or vice versa. Through these alternating processes of decomposition, structures of alternate character are formed by mutually opposing influences. This arising and passing away is triggered artificially and reciprocally intensified until a complete solution results, ultimately arriving at the synthesis intended.

> With warming and having undergone an end reaction, the finished mixture has a slight smell of petrol, but does not burn. However, ***if this mixture is atomized in a needle jet or injector and only lightly compressed by the descending piston, then an explosion occurs.***

Diesel-Perfect Explosive Water

We have thereby achieved what we wanted, namely a mixture of ***explosive water,*** *which is an exceptionally stable and safe substance, but which produces a higher dynamic effect in the piston engine than the product obtained through the distillation of crude oil we call "petrol" (gasoline). Electromagnetic ignition is superfluous*[220] *and by means of this process we have produced a substance that can be used in Diesel engines.*

For large scale production, this mixture is best produced in special tubes, which cool and move the seawater bio-dynamically as it flows. In this way any desired quantity can be mass-produced. Since any kind of agricultural or forestry waste can be decomposed in these tubes, this process is by far the simplest and best, for no work of any kind is required.

All that is necessary is for predigested waste matter to be thoroughly and completely fermented in seawater or salinized fresh water during the self-cooling flowing motion.

The addition of turnip slices, fruit-waste, lemon peel, etc., increases the valence of the mixture, because we are here concerned with a very simple natural process, which is essentially always the same, namely that everything that has once grown, that has lived and moved, pulsates, ferments and reconstitutes and builds itself up, if the thing is merely moved morphologically and the anomaly point or life-point is approached as a result. With every degree Celsius (1.8°F) drop in temperature, all gases cool at the expense of their volume and in this extremely simple way the dematerialization volume, or the Fourth Dimension, or the condition of pure energy is ultimately reached. In this respect it is important to differentiate clearly between the spacial[221] structure and the volumetric structure; that is to say, that neither formative entities, nor dematerializing entities should be allowed to appear, if one wishes to accumulate positive or negative intensifications of energy in any given liquid. This takes place at the anomaly point or point of neutrality, in which space and volume dematerialize and hence manifest themselves non-spacially as energy.

--END OF SCHAUBERGER'S ARTICLE—

---

[220] Superfluous: wasteful, over the top; not really necessary.

[221] Here the word 'spacial' can also be taken to mean 'dimensional' in that here it is necessary to achieve an intermediate state of equilibrium at the halfway point between other-dimensionality and physical volume.

Little-known principles of Schauberger's Domestic Power Station *(some call it his "perpetual motion machine" as they don't understand how it worked using water by biomimicry)*

The table below shows the interior design of Schauberger's Domestic Power Station, often called the IMPLOSION MACHINE; to the right is a photo of the machine he used in the 1950's for home lighting and heating (full photo next page). The left side shows that it imitates natural explosion-implosion **galaxy** and **tornado** "machines". Source: Dr. Valeriy Shikhirin (www.elastoneering.com) from the Proceedings of Third International Research and Application Conference "Tore Technologies" held 23-25 Nov. 2006 at the Irkutsk State Technical University, Russia, pages 158-179; translation from Russian. Also refer to Vladimir Berdinskikh's paper "Physical Aspects of Self-Acting Hydrodynamic Systems" from the same conference: http://evgars.com/berdinskih1.htm

NATURE		TECHNOLOGY
Galaxy Doublegonal Eye	Hurricane Pentagonal Eye	"Schauberger" Hexahedral Eye

Schauberger Quotes on Water and Energy

Implosion Magazine № 71, page 12:

At the intersection of two temperature gradients atomic energy is released. *Whether it is a formative or destructive energy is determined in each case by the type of movement and the composition of the alloys used to build the motion-producing machine.*

Implosion Magazine № 118, page 8:

In the outbirth[222] of water we have to differentiate between two different kinds. Namely water as a carrier-substance that contains predominantly negative potentialities (substances attuned to ***earth*** *frequencies) or predominantly positive potentialities (substances attuned to* ***air*** *frequencies).*

The former are to be viewed as upwardly-impelling geospheric instrumentalities and the latter as downwardly-impelling atmospheric instrumentalities. The former refine and exalt the higher-grade constituents, i.e. they serve the build-up of levitative potencies. The latter serve to cleanse the atmosphere of suspended matter, which as threshold substances still possess too little self-weight and too high a quota of levitative essences and can neither rise nor fall.

It is these threshold substances that can be transformed and exalted through cycloid-space-curve motion. From a practical point of view, this is only possible through their co-oscillation with their respective carrier-substances, be it air or water.

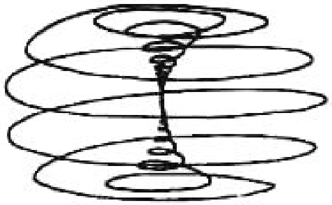

This leads to a build-up of those substances incapable of further development, resulting in a renewed intensification of the differences in potential through the spacial separation of the difference-substances. The end result is an increased motive force. ***This explains the concept of perpetual motion in its most natural sense****.*

Mensch und Technik, 1993 (written by Schauberger in 1936)

Schauberger's last photo with his Implosion Machine (Domestic Power Station), 1995 →

The true foundation of all culture is the knowledge and understanding of water. *Water is the ur-substance[223] or ur-cause of all creation and for this reason is the ur-original accumulator, which readily absorbs both earthly and cosmic substances and conveys them to the body in a purely objective form.*

---

[222] Creation or bringing into view.

[223] Ur- originally a German prefix meaning "original or primitive."

This is dependent, however, on the possibility of incorporating these substances in the water. This must be done in such a way that the ur-attributes will in no way be modified and that change as such can only first come about in the effect, which the organically correctly structured body mediates and imparts. For this reason a good spirit dwells in a healthy body. Conversely a body full of vitality can be created, maintained and further developed by healing the inhering {existing permanently and inseparably} *spirit.*

Implosion Magazine № 6, page 29:

The revelation of the secret of water will put an end to all manner of speculation or expediency and their excrescences, to which belong war, hatred, impatience and discord of every kind. ***The thorough study of water therefore signifies the end of monopolies, the end of all domination*** *in the truest sense of the word and the start of a socialism arising from the development of individualism in its most perfect form.*

Recommended reading

'The Energy Evolution: Harnessing Free Energy from Nature'

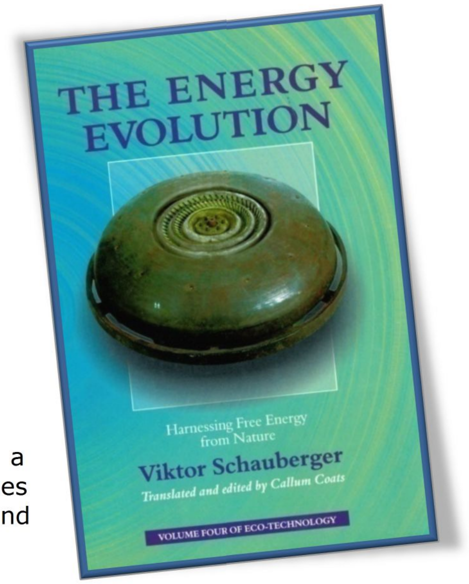

Download: https://archive.org/details/TheEnergyEvolution
(many formats available: PDF, Kindle, ePub, text, etc.)

278 pages, 61 illustrations: http://schauberger.co.uk/books/

Book Description

Nature produces energy by slow, cool, implosive means – by a centripetal inward motion, while our present culture uses explosive (outwards) centrifugal motion, which is wasteful and many times less powerful and effective.

This unnatural motion is not only wasteful uses up the Earth's resources – it also pollutes her ecosystems.

This book is the fourth and last of the Eco-Technology series, that is now available ***thanks to the fantastic translation (from the original German) by Callum Coats,*** who also edited and arranged Schauberger's works from his "lost" patents, articles, drawings, science notes and letters.

I'm recommending this particular volume to you because it describes different kinds of energy machines which depend on the principle of implosion. For example, a spring water-producing machine, a tornado home energy generator, a Klimator Type of a 'dynamo' which produces mountain-quality air), the biotechnical submarine, a technique for producing power from ocean deeps, and other inventions.

Of particular interest to this book that you're reading now is the chapter titled ***"Petrol (Gasoline) From Water"*** which I've added below in its entirety. It is an interesting article, yet it is hard to comprehend without studying his scientific philosophy.

'The Water Wizard: The Extraordinary Properties of Natural Water'

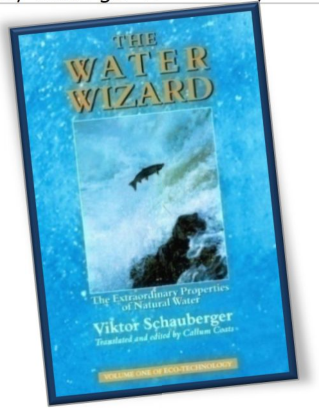

256 pages, available at www.schauberger.co.uk/books

They also offer other good books about the life, the works and the philosophy of Viktor Schauberger. These books are not something to read through in one day and it may take years to fully grasp his complete unorthodox approach to nature, yet they are worth having in your science library so you can refer to them as needed.

Further study

In English

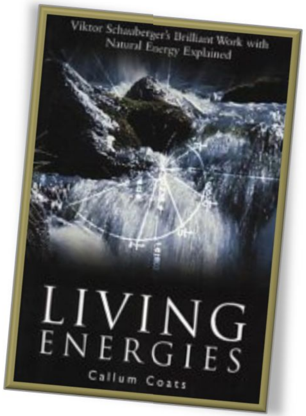

- Download the book **'The Energy Evolution'** in PDF format: http://free-energy.xf.cz/SCHAUBERGER/The_Energy_Evolution.pdf
- **Living Water: Viktor Schauberger and the Secrets of Natural Energy** – Olof Alexandersson – 162 pages, 53 illustrations
- **Living Energies: Viktor Schauberger's brilliant work with Natural Energies Explained** – Callum Coats – 320 pages, 218 illustrations
- **Hidden Nature: The Startling Insights of Viktor Schauberger** – Alick Bartholomew (http://alickbartholomew.co.uk/) – 284 pages, 72 illustrations
- **The Schauberger Keys** – Alick Bartholomew – softcover 20 pages, 14 illustrations

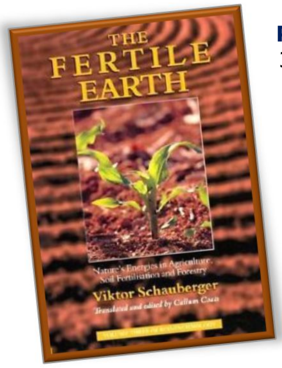

- **Eco-Technology Series Volume 1: The Water Wizard: The Extraordinary Properties of Water** – Viktor Schauberger, translated by Callum Coats – 256 pages, 33 illustrations
- **Eco-Technology Series Volume 2: Nature as Teacher: New Principles in the Workings of Nature** – Viktor Schauberger, translated by Callum Coats – 192 pages, 9 illustrations
- **Eco-Technology Series Volume 3: The Fertile Earth: Nature's Energies in Agriculture, Soil Fertilisation and Forestry** – Viktor Schauberger, translated by Callum Coats – 220 pages, 16 illustrations
- **Eco-Technology Series Volume 4: The Energy Evolution: Harnessing Free Energy from Nature** – Viktor Schauberger, translated by Callum Coats – 278 pages, 61 illustrations
- **Sensitive Chaos: The Creation of Flowing Forms in Water & Air** – Theodor Schwenk – 233 pages, 124 illustrations.
- http://www.youtube.com/watch?v=ItsSYwTSnTY – full movie by Franz Fitzke: **'Viktor Schauberger - Comprehend and Copy Nature.'**

In German

- http://www.viktor-schauberger.at/ – Walter Schauberger's Pythagoras Kepler System school → in Bad Ischl, Austria; currently run by Jörg Schauberger (Viktor's grandson).

RELATED SCIENCE (not by Viktor Schauberger)

Water Energy – Extracted Mechanically *by Nature Itself!*

The Pulser Pump

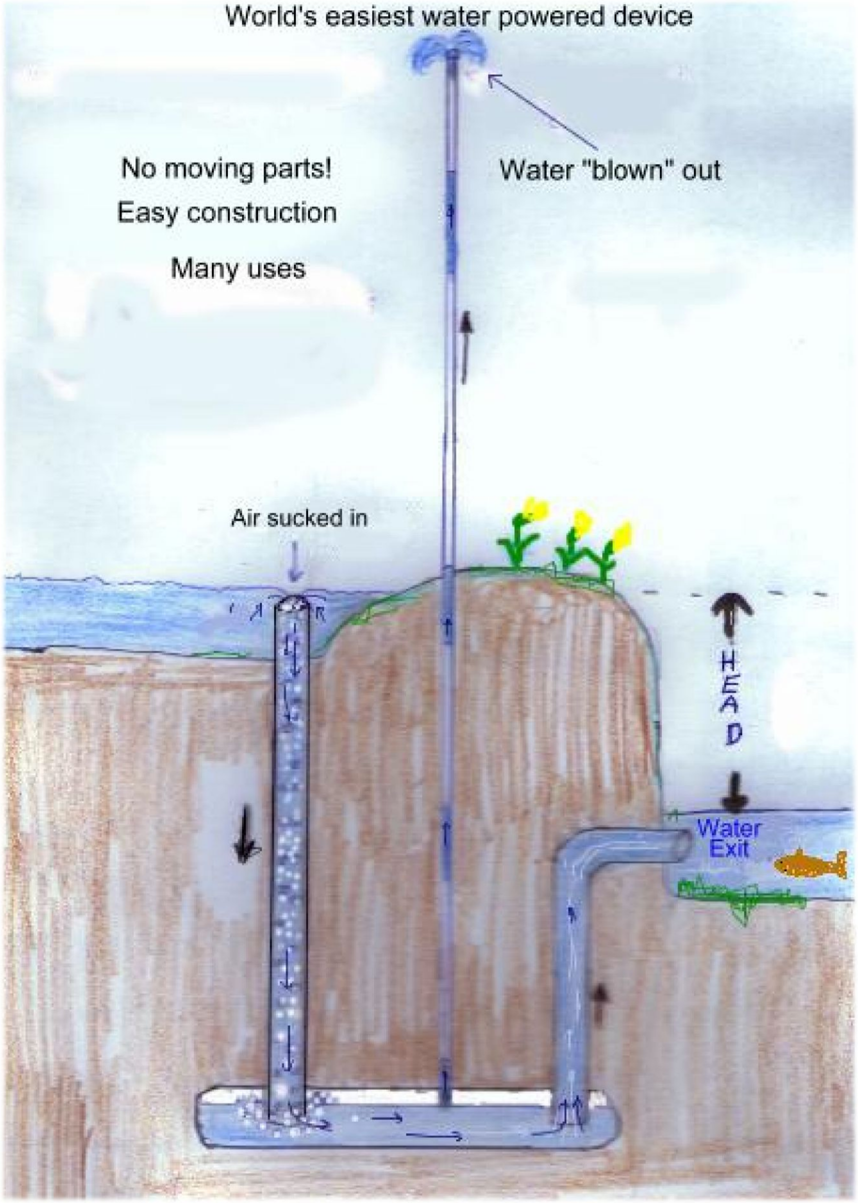

[Source: Brian White, www.Appropedia.org]

The PULSER PUMP is a simple, water powered mechanical device, also known as a Bubble Pump.

It has been used in various applications, including extraction of oil, refrigeration cycles and also for irrigation or pumping drinking water to remote drinking fountains. They may have even been used in ancient times for decorative water fountains.

This particular design of a Pulser Pump described and tested by Brian White uses the turbulent flow in a stream to trap ambient air and use its pressure to pump water up – without investing an iota of energy in the process. It's also very cheap to build and needs hardly any maintenance.

Not only a true Free-Energy system, but it has two other major benefits: it has no mechanical or moving parts, and it doesn't use any chemicals, only the water from a stream. Once installed near a stream, the pump can lift water (much higher than the stream!) using only the energy from the stream, together with the energy trapped in the air bubbles.

As a side benefit, it has also been claimed that Pulser Pumps improve the quality of water by increasing its oxygen content.

Brian White built a working model and in 2010 published his findings, with drawings and complete instructions and component list at: **www.APPROPEDIA.org/Pulser_pump**

University Research

Other researchers have investigated the Pulser Pump technology, seeing that it is too simple and affordable to ignore. They believed that at the very least it must be evaluated. Michael Turner and his team, supervised by Brian Skinner, have built the setup shown here at Loughborough University (Leicestershire, England) to test the feasibility and variables of the Pulser Pump. In his research paper Michael Turner wrote:

> ***"The Pulser Pump has the innate advantage of being a non-mechanical pumping device, it is unlikely to break down and after initial setup it is self-sustaining. Despite this, there is significant reluctance to adopt this technology in the scientific community. One reason for this is the lack of knowledge of how it operates. By designing and constructing a suitable laboratory model based on theory and practice, two experiments were designed and performed in order to answer a series of research questions and thus develop the knowledge base of the Pulser Pump. These experiments found that inflow, pumping height and the number of riser pipes to be critical variables."***

References for further study:

- ***"INVESTIGATING THE PULSER PUMP" by Michael Turner and Brian Skinner*** of the Loughborough University, United Kingdom, 2013: http://files.meetup.com/1759713/The%20Pulser%20Pump%20Dissertation.pdf
- "BUBBLE PUMP DESIGN AND PERFORMANCE" by Susan Jennifer White, Georgia Institute of Technology, Georgia, USA, 2001: https://smartech.gatech.edu/handle/1853/16914 and http://citeseerx.ist.psu.edu/viewdoc/download?doi=10.1.1.148.9137&rep=rep1&type=pdf
- **Ram Pump** (also 'hydraulic ram' or hydram): similar setup, does same work.

John Kanzius' and Rustum Roy's Patent to IGNITE LIQUID SALT WATER

The photo (source: http://RexResearch.com) shows John Kanzius demonstrating how his cancer-killing machine can ignite salt water.

The reason I have attached the Kanzius/Roy Patent to Schauberger's turn-water-into-gasoline invention is because it seems that they have both achieved a similar goal – to burn liquid water as a fuel, without mixing it with hydrocarbons or alcohols. Since Schauberger usually used biomimicry, Kanzius came from the world of radio frequencies so each one of them used his set of skills and know-how.

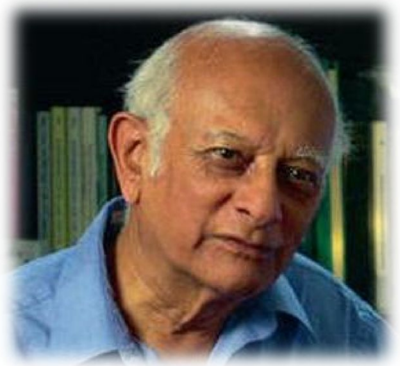

The second person signed on the Patent below is material scientist and water expert, Rustum Roy. Professor Roy, PHD (1924–2010) was a physicist, born in India, who became a professor at Pennsylvania State University and was a leader in materials research. As an advocate for interdisciplinarity, he initiated a movement of materials research societies and wrote about the need for a fusion of religion and science. Later in life he held visiting professorships in materials science at Arizona State University, and in medicine at the University of Arizona.

Inventors: John Kanzius and Rustum Roy. Mexican Patent № MX2009005080 (also registered as Worldwide WO2008064002, Japan JP2010509565, Europe EP2109500 and Canada CA2669709) "RF Systems and Methods for Processing Salt Water" – 2009

Download (English version only): http://rexresearch.com/kanzius/kanzius.htm#mxpatent

Abstract

Systems and methods for processing salt water and/or solutions containing salt water with RF energy. Exemplary systems and methods may use RF energy to combust salt water, produce hydrogen from salt water or solutions containing salt water, to volatilize a secondary fuel present in solutions containing salt water, to produce and combust hydrogen obtained from salt water or solutions containing salt water, to volatilize and combust secondary fuel sources present in solutions containing salt water, to desalinate seawater, and to carry out the electrolysis of water are presented. An exemplary system

may comprise a reservoir for containing a salt water solution or salt water mixture; a reaction chamber having an inlet and an outlet; a feed line operatively connecting the reservoir to the inlet of the reaction chamber; an RF transmitter having an RF generator in circuit communication with a transmission head, the RF generator capable of generating an RF signal absorbable by the salt water solution or the salt water mixture having a frequency for transmission via the transmission head; and an RF receiver; wherein the reaction chamber is positioned such that it is between the RF transmission head and the RF receiver.

Field of the Invention

The present invention relates to systems and methods for processing water utilizing radio frequency (RF) energy, such as, for example, RF systems and methods for combustion of salt water and/or solutions containing salt water, RF systems and methods for desalinating seawater, RF systems and methods for heating seawater, salt water, and/or solutions containing salt water, RF systems and methods for generating steam, RF systems and methods for volatilizing secondary fuels, RF systems and methods for the electrolysis of salt water and salt water mixtures, RF systems and methods for producing hydrogen from salt water and salt water mixtures, RF systems and methods for producing hydrogen from salt water and/or solutions containing salt water, RF systems and methods for combustion of volatiles produced from solutions containing salt water, and/or RF systems and methods for combustion of hydrogen produced from salt water and/or solutions containing salt water.

Background of the Invention

Hydrogen gas is combustible and is therefore a potentially viable fuel source particularly for use in internal combustion engines. Water can be a source of hydrogen gas and unlike crude oil, which is used to produce gasoline, water and particularly seawater has an advantage over crude oil in that it is present on earth in great abundance. Furthermore, the burning of hydrogen produces water, an environmentally clean byproduct.

Many other volatile organic compounds, such as ethanol for example, are also combustible and so they too are potentially viable fuel sources for use in internal combustion engines. Likewise, ethanol has an advantage over crude oil in that ethanol can be synthesized from fermentation of com, sugar cane or other agricultural products and it is therefore a renewable resource, while by contrast crude oil is not.

Brief Description of the Drawings

Figures 1-7 are high-level block diagrams of exemplary RF systems for RF processing of salt water and/or solutions containing salt water, such as combusting salt water or solutions containing salt water, generating steam from salt water, producing and collecting hydrogen from salt water or solutions containing salt water, and desalinating seawater;

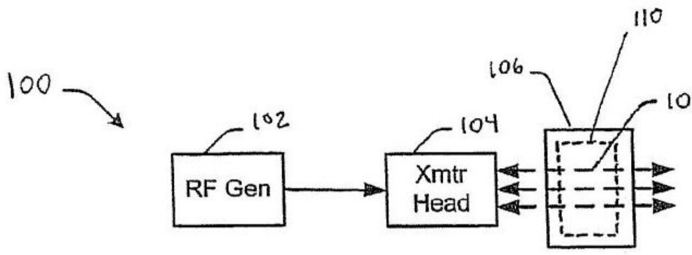

Fig. 1

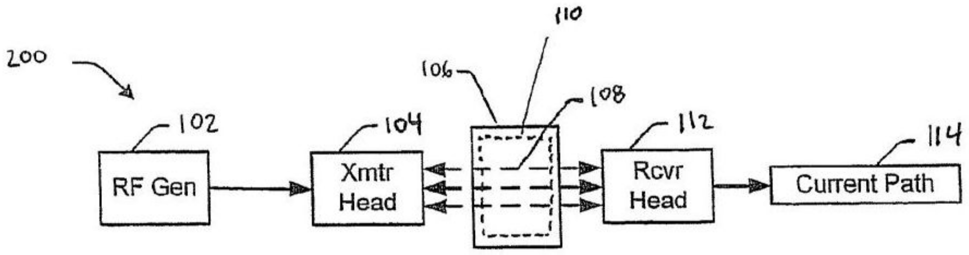

Fig. 2

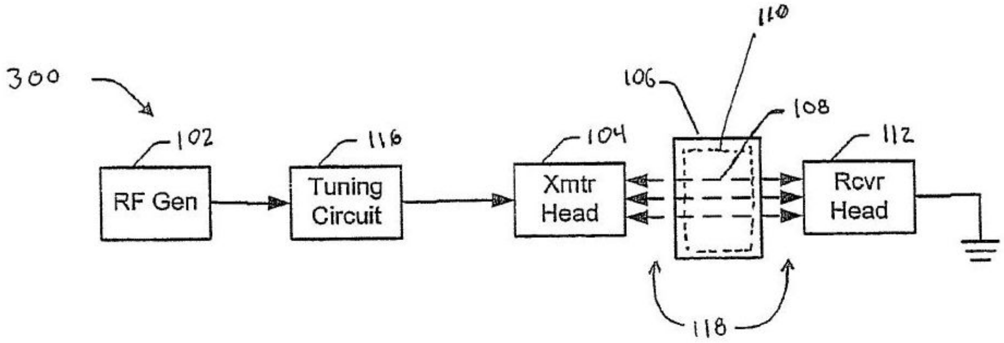

Fig. 3

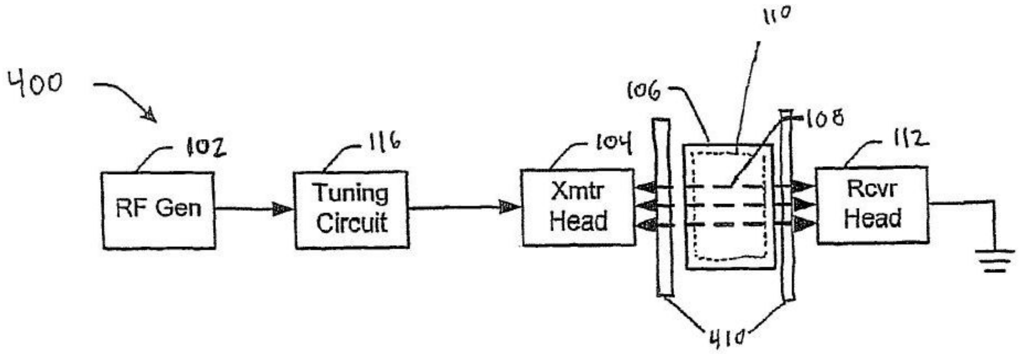

Fig. 4

This copy of the Patent is incomplete; for the complete text (and most of the drawings) visit http://rexresearch.com/kanzius/kanzius.htm#mxpatent and if you have access to the Mexican government's database of Patents, please send me the original MX2009005080. ~Ozzie

To fully understand this invention download the 81-page textbook ULTRASONICS METHODS AND APPLICATIONS by Jack Blitz, courtesy of Patrick Kelly at http://www.free-energy-info.com/Blitz.pdf as well as Martin Chaplin's thesis on water's absorption of microwave energy and other frequencies at www1.lsbu.ac.uk/water/water_vibrational_spectrum.html

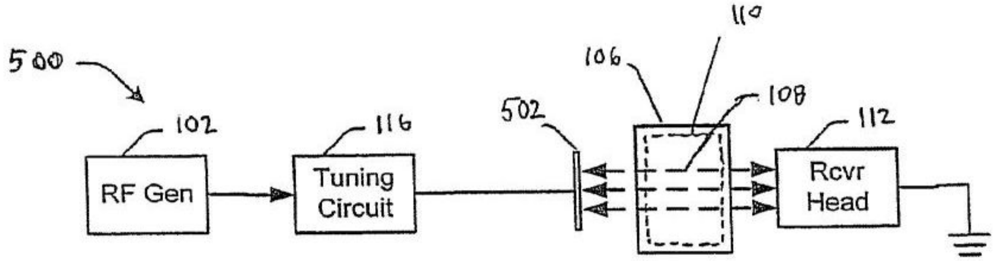

Fig. 5

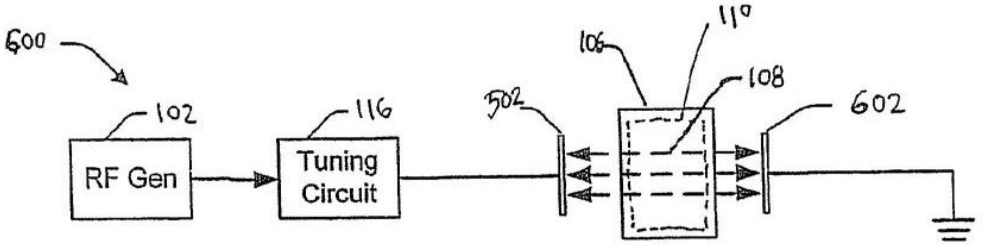

Fig. 6

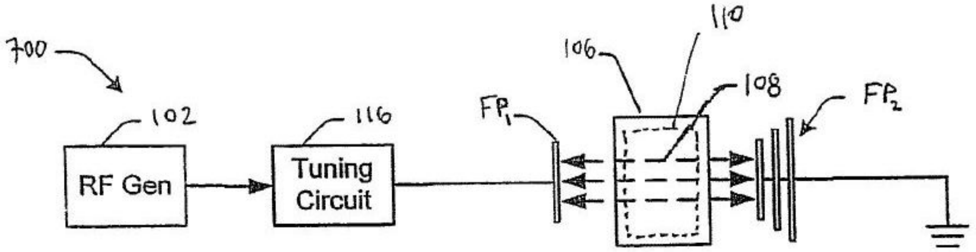

Fig. 7

Figures 8A-8C, 9A-9C are various views of exemplary RF transmission and RF reception heads;

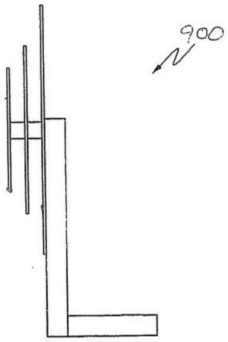

FIG. 9A

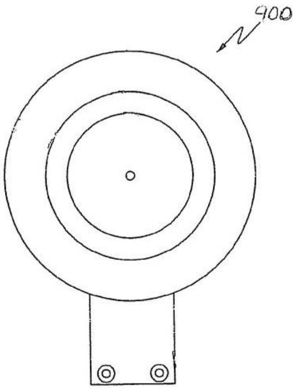

FIG. 9B

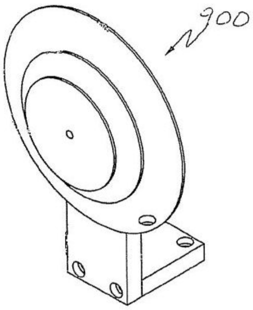

FIG. 9C

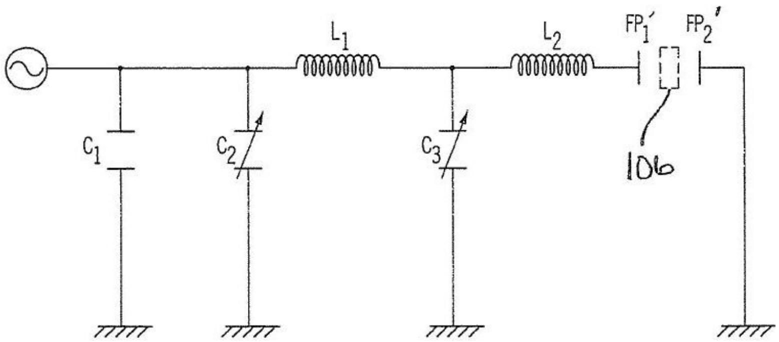

FIG. 16a

Figures 10-12, 16, and 16a are schematic diagrams of exemplary RF circuits for exemplary RF systems for RF processing of salt water and/or solutions containing salt water, such as combusting salt water or solutions containing salt water, generating steam from salt water, producing and collecting hydrogen from salt water or solutions containing salt water, and desalinating seawater;

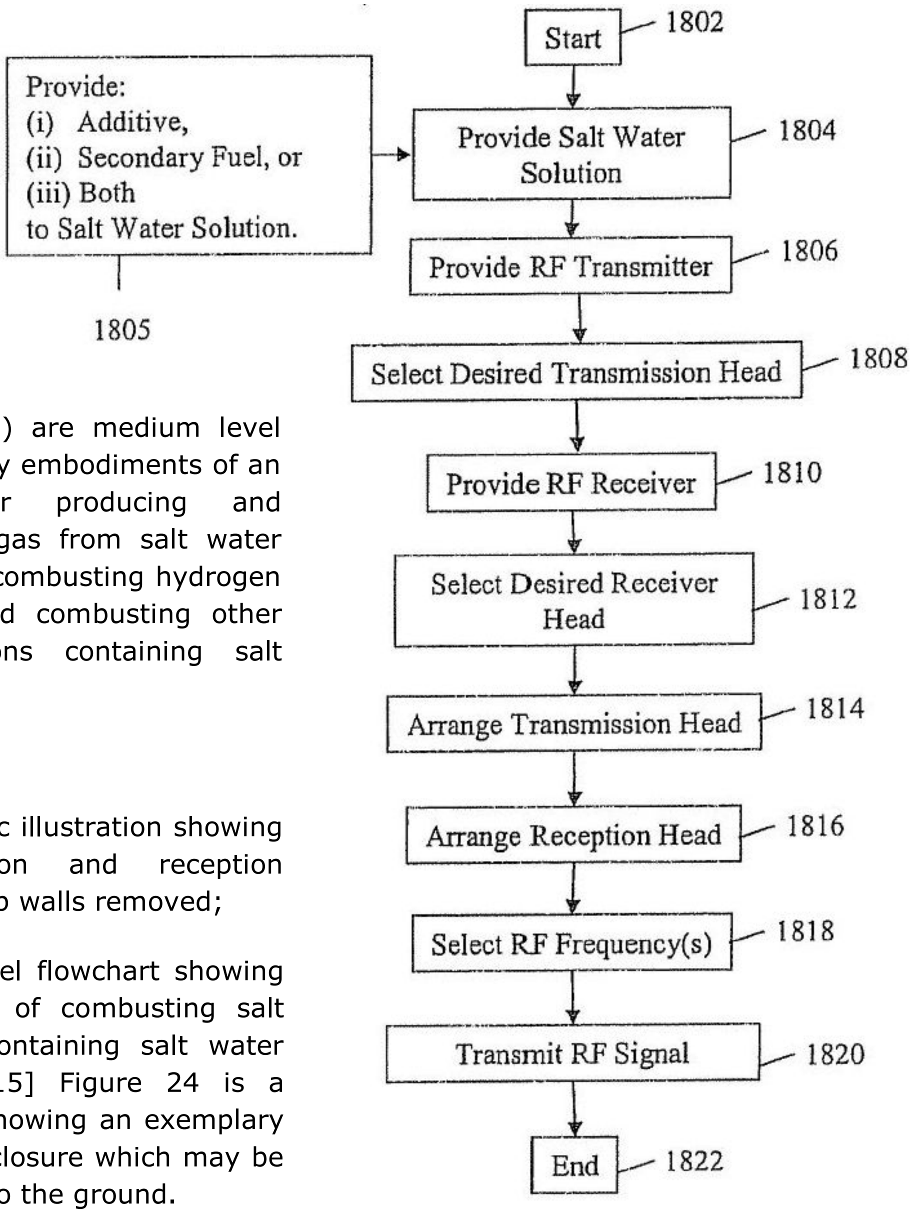

FIG. 18 (b)

Figure 18(a) and 18(b) are medium level flow charts of exemplary embodiments of an RF methodology for producing and combusting hydrogen gas from salt water and for producing and combusting hydrogen gas and producing and combusting other volatiles from solutions containing salt water;

Figure 22 is a schematic illustration showing exemplary transmission and reception enclosures with their top walls removed;

Figure 23 is a high-level flowchart showing an exemplary method of combusting salt water and solutions containing salt water with RF energy; [0015] Figure 24 is a schematic illustration showing an exemplary sealed transmission enclosure which may be suitable for lowering into the ground.

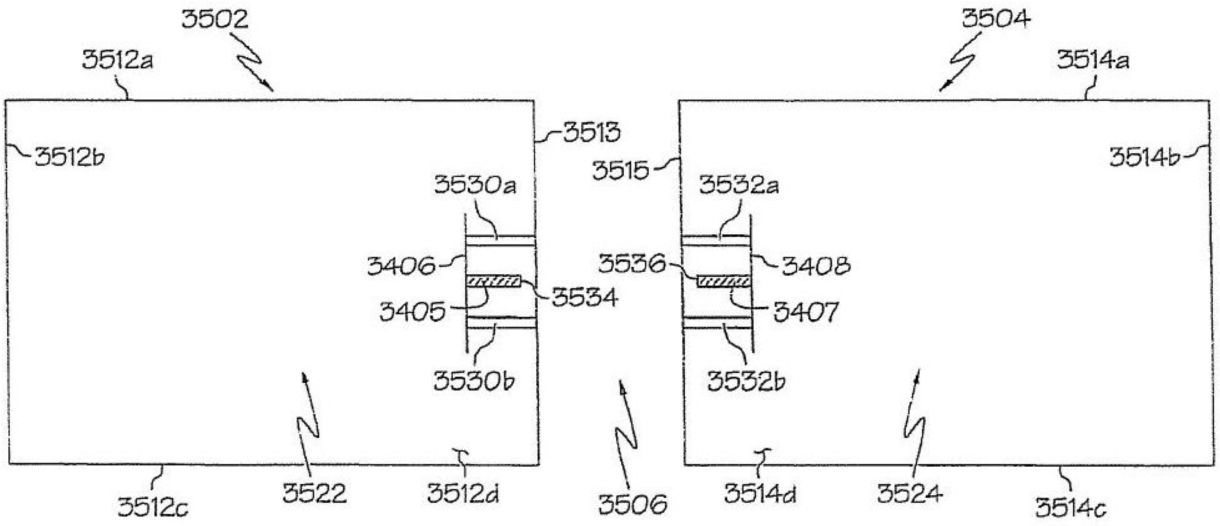

Figure 22

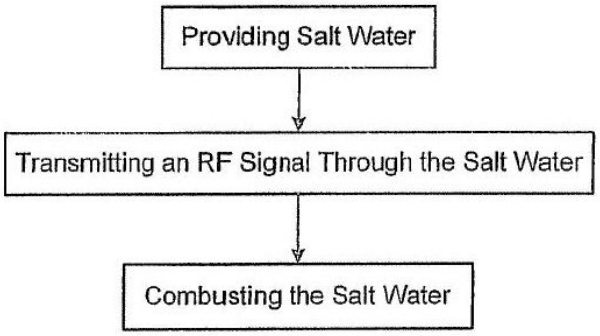

Figure 23

Summary

Systems are presented for using RF energy to combust salt water and/or various solutions containing salt water, to produce hydrogen from salt water, to produce volatiles from solutions containing salt water, to desalinate seawater, and/or to carry out the electrolysis of water.

An exemplary system may comprise a reservoir for containing salt water that is a mixture comprising water and salt, the salt water having an effective amount of salt dissolved in the water; a reaction chamber having an inlet and an outlet; a feed line operatively connecting the reservoir to the inlet of the reaction chamber; an RF transmitter having an RF generator in circuit communication with a transmission head, the RF generator capable of generating an RF signal at least partially absorbable by the salt water having at least one frequency for transmission via the transmission head; and an RF receiver; wherein the reaction chamber is positioned such that at least a portion of the reaction chamber is between the RF transmission head and the RF receiver. Other exemplary systems may comprise a reservoir for containing a solution that is a mixture of water and salt and optionally containing (i) at least one additive, or (ii) at least one secondary fuel, or (iii) mixtures thereof.

Similarly, methods are presented for using RF energy to combust salt water and solutions containing salt water, to desalinate seawater, to produce hydrogen from salt water and solutions containing salt water, and/or to carry out the electrolysis of salt water.

Chapter 32.

EMERGING: Rosch — Energy from Water using Archimedes' Law?

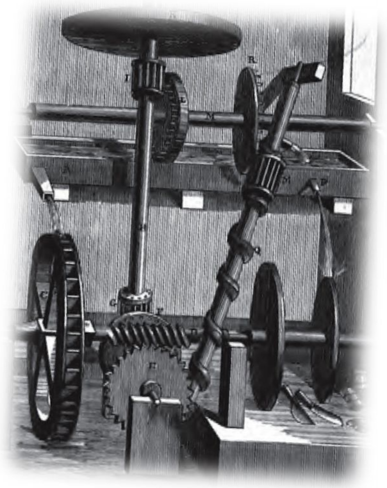

Historic Background

Robert Fludd (a.k.a. Robertus de Fluctibus) was a well-known English mathematician, physician, cosmologist, astrologer and more. In 1618 he introduced this "water screw" perpetual motion machine, which was based, in part, on an ancient machine called Archimedes' screw, or screwpump, that was used in Egypt and other places for transferring water from a low-lying body of water into irrigation ditches.

Fludd's device is widely credited as the first recorded attempt to describe such a device in order to produce useful work (at that time, to drive millstones). This perpetual motion device inspired many other devices. The idea of using water motion in a ***seemingly*** closed loop and extracting energy out of that loop is not new. Fludd's water machine is said to have been a hoax, but the fact that it used water makes it interesting. Was it a hoax? Or inspiration?

Let's look at modern usage of Archimedean knowledge about buoyancy and water motion. *Does the Patent office consider water buoyancy useful for energy?* A quick look finds several Buoyancy Patents; some use atmospheric pressure, some utilize lighter-than-air balloons or other devices (some shown next page):

- 1974 – R. Gilmore, US Patent № 3857242 "Gravity-buoyancy motor"
- 1976 - David Diamond, , US Patent № 3934964 →→ "Gravity-actuated fluid displacement power generator"
- 1985 – Collin Bowen, US Pat. 4514977 "Water lift system"
- 1995 – Donald Bendiks, US Patent № 4845376 "Buoyant gas activated hydroelectric generator"
- 2013 – David Chacko Manakkattupadeettathil, US Patent № 8516812 "Power production employing buoyancy, gravity and kinetic energy"

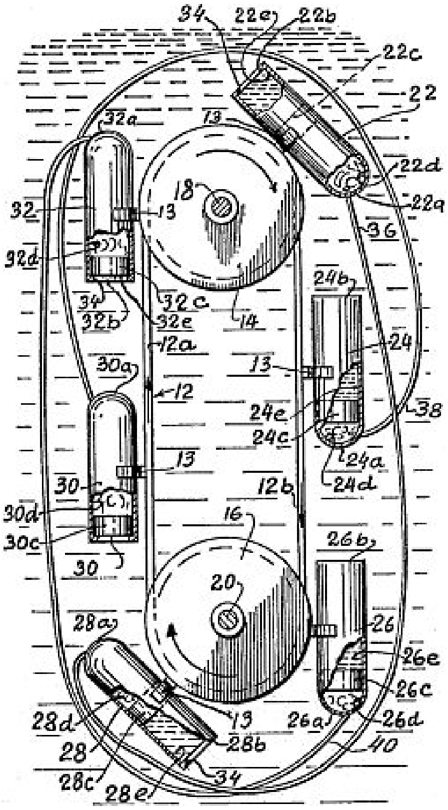

Inventor: Collin Bowen, US Pat. 4514977 "Water lift system" – 1985

Download: www.google.com/patents/US4514977

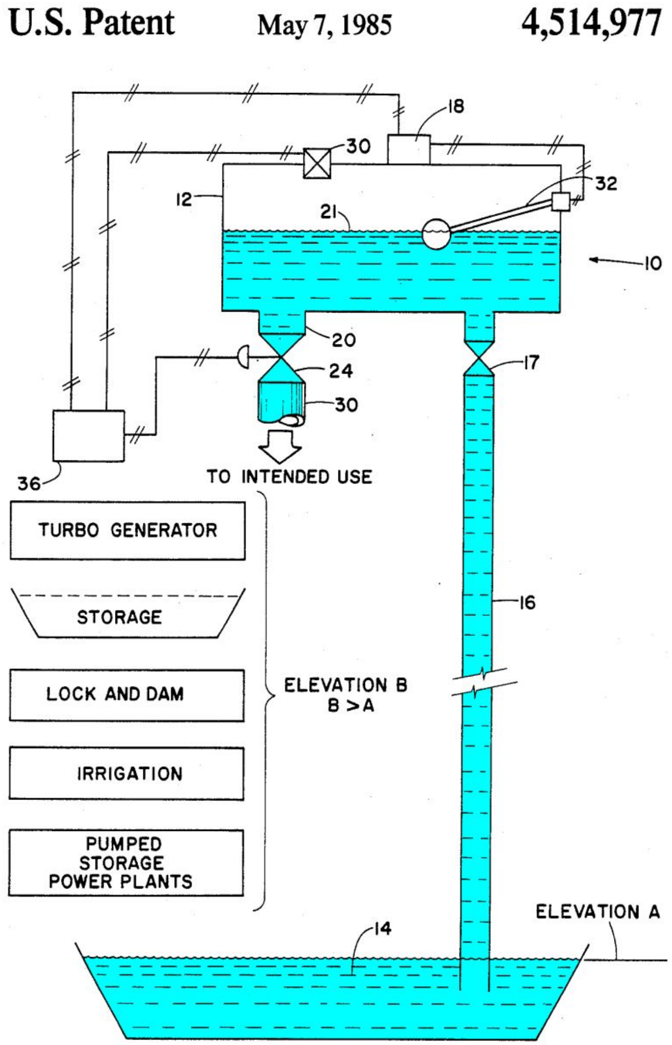

Inventor: Donald Bendiks, US Patent № 4845376 "Buoyant gas activated hydroelectric generator" – 1995

Download: www.google.com/patents/US4845376

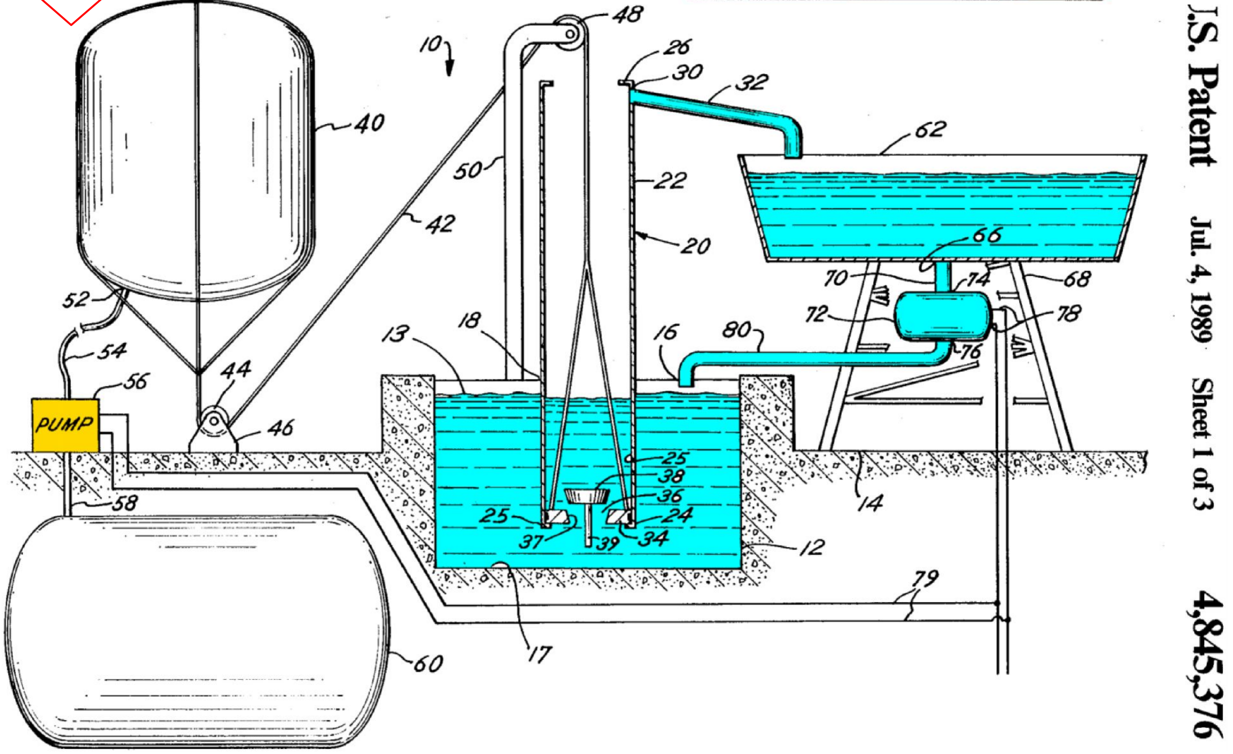

See any resemblance between Rosch (image below) and this US Patent № 4718232 (image to the right) from 1988?

I'm only asking because they haven't mentioned it in their description or prior art. But frankly, I went through many Patents old and new that all had similar structures. The answer could be, in my opinion, that this structure is COMMON KNOWLEDGE and Rosch uniqueness may be making it work powerfully and economically – without "reinventing the wheel".

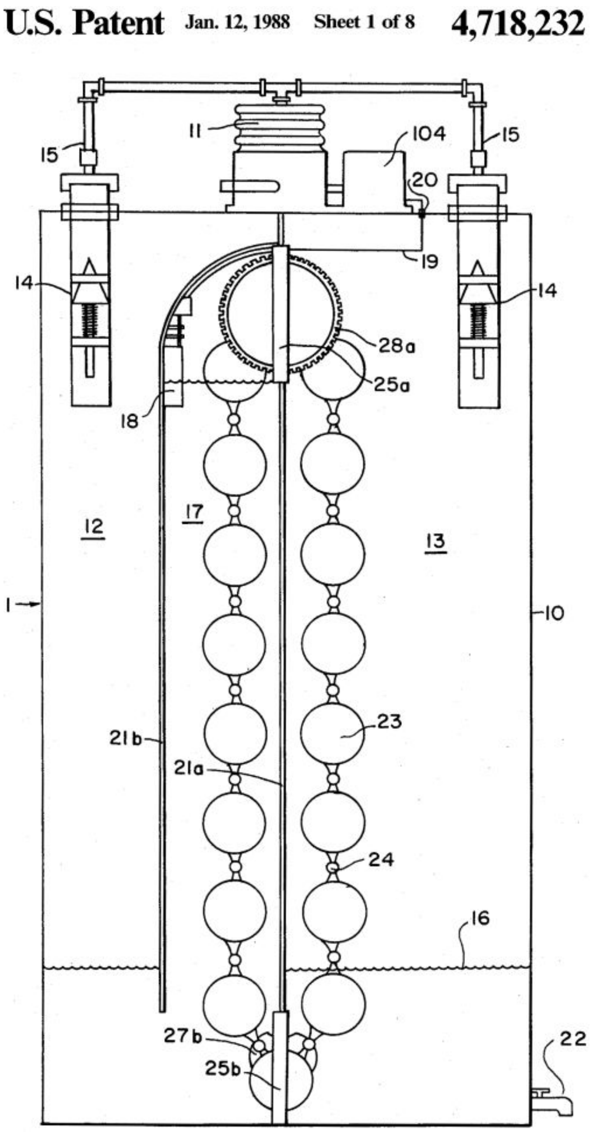

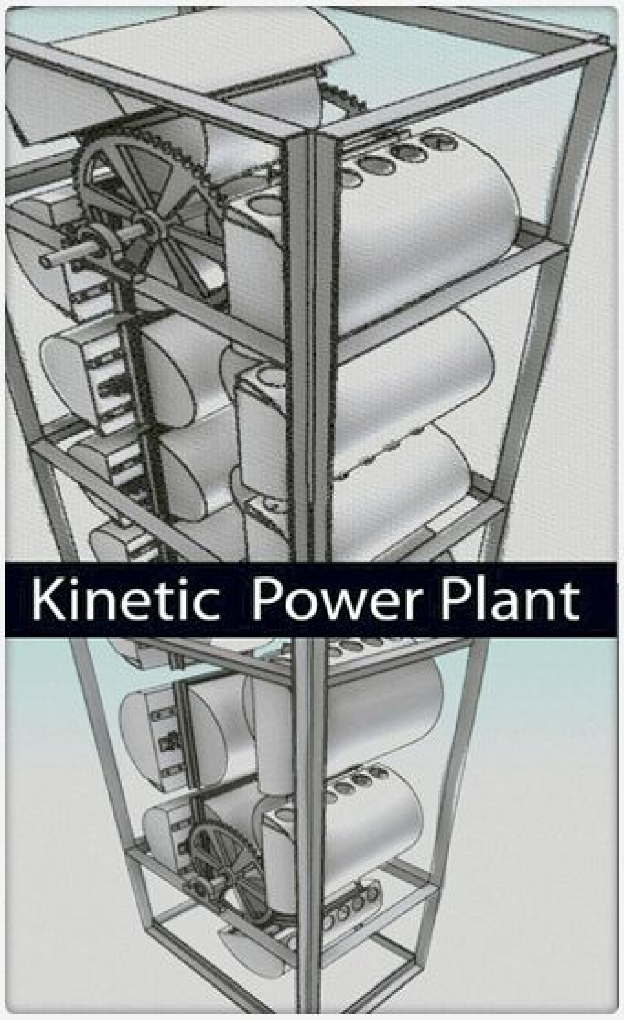

← *Image from Alexander Frolov's New Energy Technologies, January–March 2004*

A buoyancy system called 'Hidro' www.jameskwok.com/tech/hidro.html and http://panacea-bocaf.org/hidrofreeenergysystem.htm was invented by James Kwok www.jameskwok.com of New South Wales, Australia.

James Kwok next to a functional Hidro device: (image from the Hidro video, obtained from http://panacea-bocaf.org)

Rosch official website is http://rosch-innovations.de/ and their invention is called 'Kinetic Power Plant' (KPP®). In June 2015 Stuart Campbell from New Zealand travelled to Germany to validate this technology.

Rosch CEO Detlef Dohmen with Stuart Campbell

Around 2015 an inventor Sayad Abdullaoqli Mammadov from Baku, Azerbeijan, who was trying to sell a 19-years old Patent with significant similarity to Rosch's technology, claiming 15X over-unity (1,500% free energy gain).

The image below shows a schematic diagram of the invention, called SaDaiM (abbreviation of the inventor's name). Seemingly it's a closed loop that uses air from a compressor to fill up air-bags/balloons, which float up while rotating to drive the generator (the main difference from KPP being the rotary vs. linear motion).

At first glance you think: "The accumulation of friction, heat and other losses will quickly brake this system to a halt – look, there isn't even a battery!" However, if there is a secret ingredient here then it's the big wheel in the water where Archimedes' principle (possibly) collects energy from the water/environment.

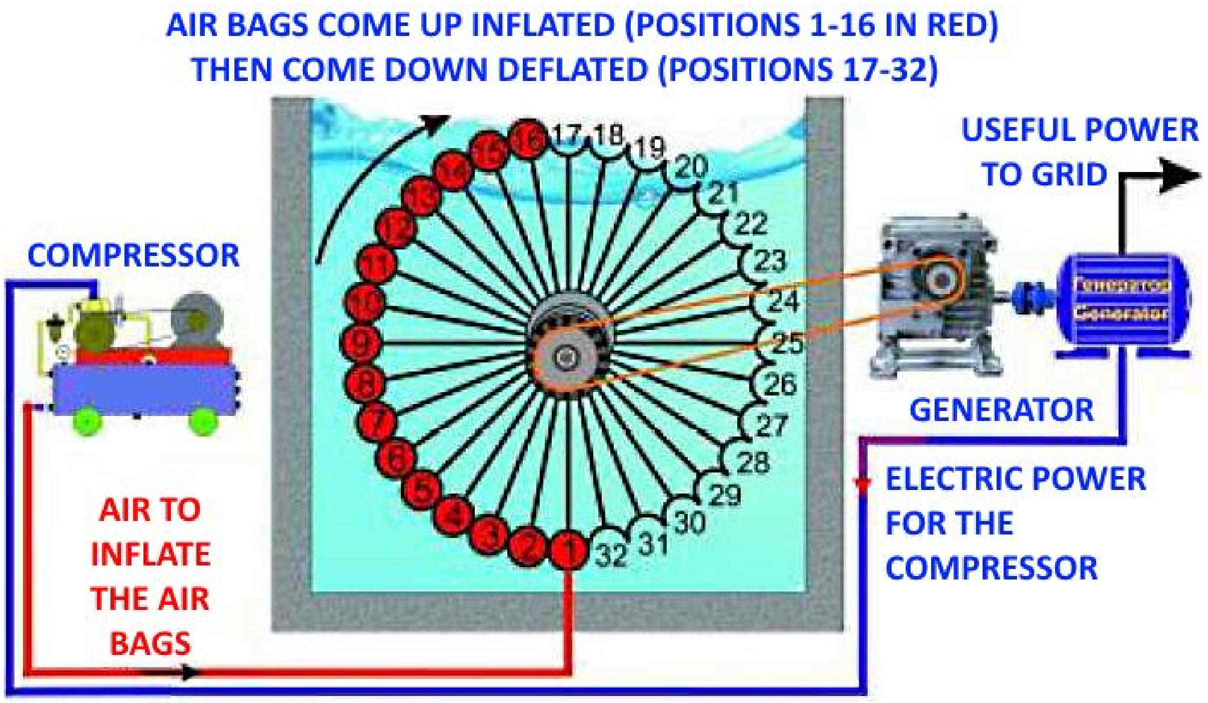

Scientific Explanation for Rosch' *Kinetic Power Plant* (KPP®) Buoyancy System

The Development Team at Rosch Innovations AG (Switzerland, Germany, more http://rosch-innovations.de/) has produced an explanation for their customers, describing how their rising float system results in excess energy that can be harnessed as a base load power generation system.

"A Method of Extraction (Restitution) of The Energy Supply Stored in Liquid or Gaseous Mediums and Transformation of the Energy Obtained into Mechanical Work"

By Detlef Dohmen, Chairman of Rosch Innovations AG

In 1607 Cornelius van Drebbel, a Dutch scientist, demonstrated a "continuously operating" clock to the English King James I. The clock was set in motion by a similar "continuously operating" motor, or, to put it simply, a "perpetuum mobile". Van Drebbel had already patented the clock in 1598.

However, unlike other numerous devices bearing the same name, the motor invented by Cornelius van Drebbel really was a "continuously operating" one in some sense.

What was the secret of this clock (or, rather, of the motor that was setting it in motion)?

Van Drebbel's continuously operating clock worked due to the drive, which used, like any other real motor, the single possible source of work – the non-equilibrium (potential difference) of the environment.

Van Drebbel made use of a special type of non-equilibrium, though it was also related to pressure and temperature differences. It may act in an ideally balanced environment, the temperature and pressure of which are everywhere equal. What is the secret of this effect and where does work come from?

The secret lies in the fact that potential differences do exist, manifesting themselves not spatially but temporally (Editor: In Goran's [Goran is our chief-engineer]), given in 1996 at the conference "New Ideas in the Natural Sciences", he proposed a similar principle for obtaining energy from a single-wire power transmission line.

Instead of a common potential difference ***U=X1—X2,*** he proposed a chronal[224] potential difference ***U=X(t1)—X(t2).*** This means that a potential difference may be obtained at a single point if a change in potential values is created). The principle can be illustrated by the example of the atmosphere. Let's assume that no considerable pressure and temperature differences are observed in the area where a motor is situated. But the pressure and temperature (common at all points) still continue to change (both day and night). These differences may be used for obtaining work (in full accordance with the laws of thermodynamics).

In a description of the invention titled "A method of extraction (restitution) of the energy supply stored in liquid or gaseous mediums and transforming the energy obtained into mechanical work" (Patent claimed in Germany; we are in the process) a version of a pseudo-continuously operating working solar engine was proposed by him. In order to increase the power and the number of cycles, the properties of two mutually unbalanced mediums — gas and water — are most fully used.

Archimedes' principle is considered as a corollary of the law of conservation of energy, in which the buoyancy force is tied in with the energy consumed to create water and air. The amount of this energy determined such physical properties as density, thermal capacity and thermal conductivity.

The correlation of energy used for creating densities is partially reflected in the non-equilibrium coefficient, equaling 820. If we found a way to fully use this non-equilibrium, we would obtain an 820-fold gain in energy. Non-equilibrium states are observed starting from the moment of feeding air under a column of water. They accumulate when the air rises because the air volume increases, taking away heat from the water.

Air is fed under the water column at a temperature less than the temperature of the water, since if during the process of reaching atmospheric pressure the air pressure equals 4 Atm

---

[224] Chronal: something that pertains to time.

(0.4 MPa[225]) and the temperature is +20°C (293°K). The air will cool down to 75°C (198°K), i.e. by 95°C. Heat extraction will take place in conditions close to adiabatic[226]. This means that heat losses will be minimal due to the fact that water is a good heat accumulator but a bad heat conductor.

Calculation of an energy-extracting pneumohydraulic turbine

A compressor is used as a source of compressed air. Dynamic and positive displacement-type compressors are the most suitable for this case. Since a dynamic compressor consumes more energy than a piston-type one, we choose the latter:

- Source of compressed air — VP2-10/9 piston-type compressor →
- Compressor output — 0.167 m^3/sec
- Output pressure, MPa — 0.9 (9 Atm).
- Compressors shaft capacity— 56.5 kW
- Water cooling.

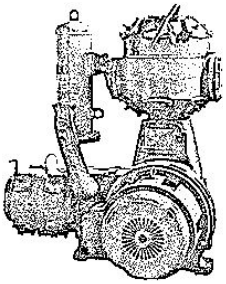

The efficiency of a pneumohydraulic turbine will be evaluated by comparing the power supplied and the power obtained, i.e. the amount of work per second.

A compressor's output is evaluated by the volume of air fed into it at atmospheric pressure. This means that a productivity of 0.167 m^3/sec is the air volume before entering the compressor and after it rises in the turbine. While feeding air under the bottom level of the turbine, 0.167 m^3/sec of water will be displaced through the upper level. The same amount of water will be fed again under the turbine's bottom level, thus creating an air-and-water mixture and causing it to move inside the turbine.

The value of 0.167 m^3/sec corresponds to the water consumption taken into consideration during the calculation of the capacity of a pneumohydraulic turbine. The capacity is calculated using the formula used for calculating the capacity of a hydraulic turbine:

N = 9.81 x Q x H x n. where 9.81 m/sec^2 — the gravitational acceleration;

Q – the water consumption in m^3/sec;

H – the head in (m);

n – Efficiency factor (which reaches rather high values and amounts to 0.94-0.95 or 94-95% under most favorable conditions).

---

[225] MPa: Megapascal, approximately 1 Atm.

[226] No heat enters or leaves the system.

As an air-and-water mixture is used as the working medium, there is a necessity to justify the use of this formula for calculating the capacity of a hydraulic turbine. We believe that the most effective results can be obtained in the operation mode of the turbine when a mixture of a 0.5 t/m^3 density is used (comprising 50% water, 50% air).

In this mode, the air pressure is a little higher than the absolute pressure inside the turbine case.

Air is fed from the pressure tube of the compressor in the form of separate bubbles, which come out from it in equal intervals. The total volume of bubbles equals the volume of water between them in the turbine case. A bubble takes the shape of a spherical segment and works as a piston in a limited space, displacing water in an upward direction only, since its backflow is impossible due to the higher pressure, while its side-flow is impossible due to the incompressibility of water.

If a constant volume of air of 0.167 m^3/sec is fed, 0.167 m^3/sec of water will be displaced. This means that 2 >< 0.167 m^3/sec of the air-and-water mixture will be displaced through the upper level of the turbine, the stream velocity inside the turbine being high.

Thus, we get:

$$N = 9.81 \times 2 \times Q \times 0.5 \times H \times 3 = 9.81 \text{-} Q \text{-} H \text{-} n$$

Let's consider an installation with a head of water column equaling 2 m and calculate the compressor engine capacity needed to feed air under this water column, taking into consideration the atmospheric pressure, proceeding from the technical specifications of the compressor:

$$N = (2\,\mathrm{m} \times 56.5\,\mathrm{kW})/(90\,\mathrm{m} \times 10\,\mathrm{m}) = 1.13\,\mathrm{kW}$$

A rising stream of an air-and-water mixture will be observed on all levels of the installation. No more than five working wheels may be installed along the stream due to the buoyant force, the intensity of which does not depend on the depth of immersion of a body.

The proposed turbine is more energy-efficient than the famous "Airlift" pump, since the flow of water takes place beneath the level of water in the turbine, i.e. in conditions close to zero gravity and without a considerable water level rise inside the turbine, on which the main amount of pump energy is spent. Let's assume that the turbine's energy efficiency equals 0.9. In this case the capacity will be:

$$N = 9.810.167\,\mathrm{m}^3/\mathrm{sec} \times 2\,\mathrm{m} \times 5 \times 0{,}9 = 14.7\,\mathrm{kW}$$

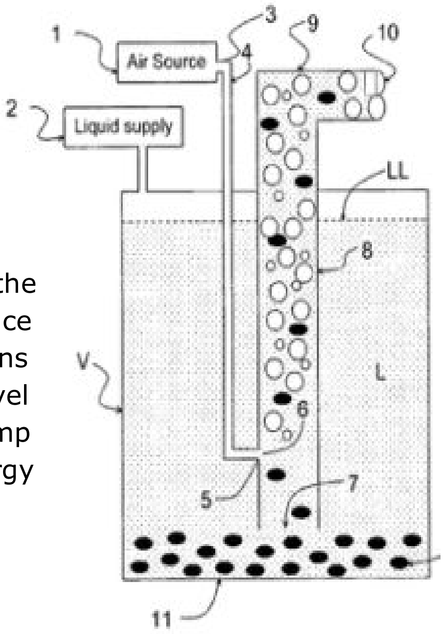

FIG. 1
US 2007/0166171 A1

Thus, we obtained output energy 13 times exceeding the input energy:

14.7 kW / 1.13 kW =13

An increase in power by means of using additional working wheels has been observed on working prototypes. The operability of the turbine has been indirectly proven by experiments carried out at Saint-Petersburg State Technical University (SpbSTU).

Thus, Professor V.V. Elistratov, a Doctor of Engineering Sciences, a member of the Commission for Unconventional Power Sources in the government of the Russian Federation and head of the Department of Renewable Energy Sources and Hydroenergetics of SpbSTU, wrote:

> ***"However, proceeding from the hydraulics of hydraulic units and our numerous experiments of feeding air into the working wheel of the turbine in order to reduce cavitation erosion, an increase of cavitation values was observed accompanied by a considerable decrease of energy values".***

In this case, the experiments show that the air that is fed into the device creates a counter stream, which, acting on the working wheel from below, makes it rotate in the opposite direction. Such is the design of the wheel. In such a way, a small volume of air acts in a limited space equaling the volume of the hydroturbine case. The proposed installation may extract heat from the water and transform it into mechanical energy.

Taking into consideration the temperature difference between the water and the air when the water temperature equals 80°C (the thermal source, water, heated up in a solar collector or in a system of turbine cooling or compressor cooling), and the air temperature is 20°C, the coefficient of the air volume increase, according to the Gay-Lussac Law, will total:

$$1+ (70°C - 20°C)/273 = 1.2$$

The capacity will amount to:

$$N = 14.7\ kW \times 1.2 = 17.6\ kW$$

Our expectations about a gain in energy were borne out:

$$17.6\ kW / 5 = 3.5\ kW$$

3.5 kW / 1.13 kW = a 3.1-fold energy gain per wheel.

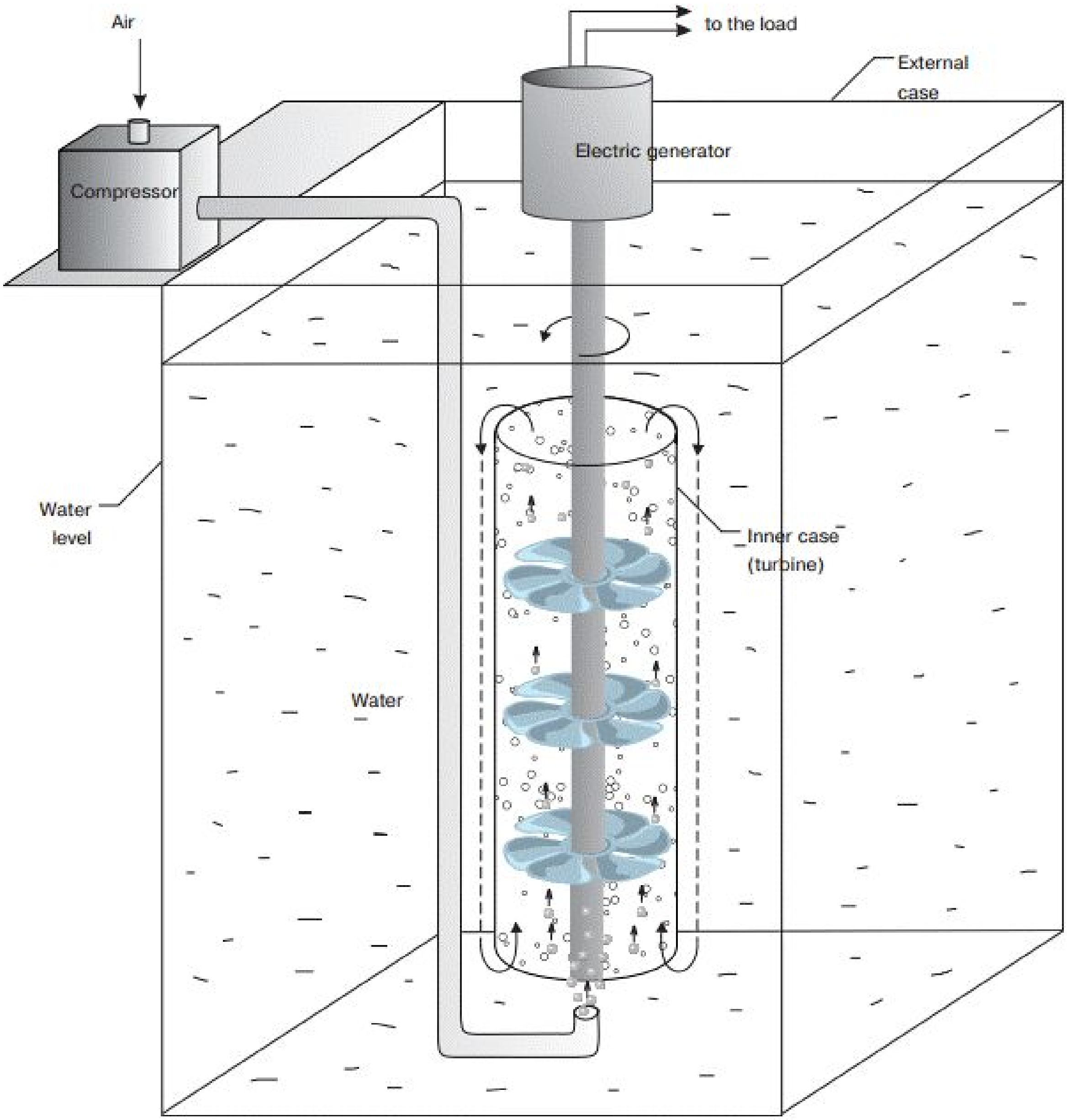

Fig. 1

During the calculation of the power needed to feed air under the water column, we took the atmospheric pressure into consideration (1 Atmosphere = 10 m of the water column). This means that the rising air overcomes the absolute pressure inside the turbine case.

The pressure, composed of the water column pressure in the turbine and the atmospheric pressure, equals the pressure of a 12-meter water column. The absolute pressure inside the turbine case is neutralized by the buoyancy force of the air, but since it is still present outside the case, it influences the feeding of air into the turbine.

This influence can be compared to the influence of the negative pressure created in the turbine case by the total volume of water inside it on the water stream (this effect is not present in other hydroturbines).

If the construction of the turbine meets out requirements, we can consider the head as:
H=H of water column + 10 n^1

Then the power will total:
N = 9.81 x 0.167 m^3/sec x 12 m x 5 x 1.2 x 0.9 = 106.14 kW

We obtained output energy 93 times greater than the input energy.

Let's calculate a more powerful energy installation able to power a small urban village, military unit, a vessel etc.

A 2VM10-63/9 piston-type compressor with the following technical specifications will be used as the source of compressed air:

- Compressor output — 1.04 m^3/sec
- Output pressure, MPa — 0.9 (9 Atm)
- Compressor shaft power — 332 kW
- Water cooling.

A calculation will be carried out for an installation with a head of water column equaling 5 m and with 10 working wheels installed inside at a distance of 500 mm from each other. The capacity of the compressor motor needed to feed air under a 5-meter water column, taking into consideration the atmospheric pressure, is:

5 m x (332 kW / 100 m) =16.6 kW

The installation capacity will total:
N = 9.81 x 1.04 m^3/sec x 15 m x 10 x 1.2 x 0.9 = 1652 kW

We obtained output energy exceeding the input energy by a factor of 99.

Thus, the obtaining of any amount of energy is possible, accompanied by an improvement in the gaseous water composition by means of an environmentally friendly method. This method implies the use of an inexhaustible energy source, when a natural non-equilibrium of water and air is used in any climatic zone. There is no more need to build expensive dams and sluices, which leads to flooding of valuable agricultural lands.

Calculation of an energy extracting pneumohydraulic engine

- Source of compressed air — VP2-10/9 piston-type compressor.
- Compressor output — 0.167 m^3/sec
- Output pressure, MPa — 0.9 (9 Atm).
- Compressor shaft capacity — 56.5 kW
- Water cooling.

The efficiency of a pneumohydraulic engine will be evaluated by comparing the power supplied and the power obtained, i.e. the amount of work per second.

The compressor output is the volume of air on the compressor's input, i.e. the volume of air at atmospheric pressure. Then the value of 0.167 m^3/sec is the volume of air on the compressor input and on the exit from the upper float of the pneumohydraulic engine (Fig. 3).

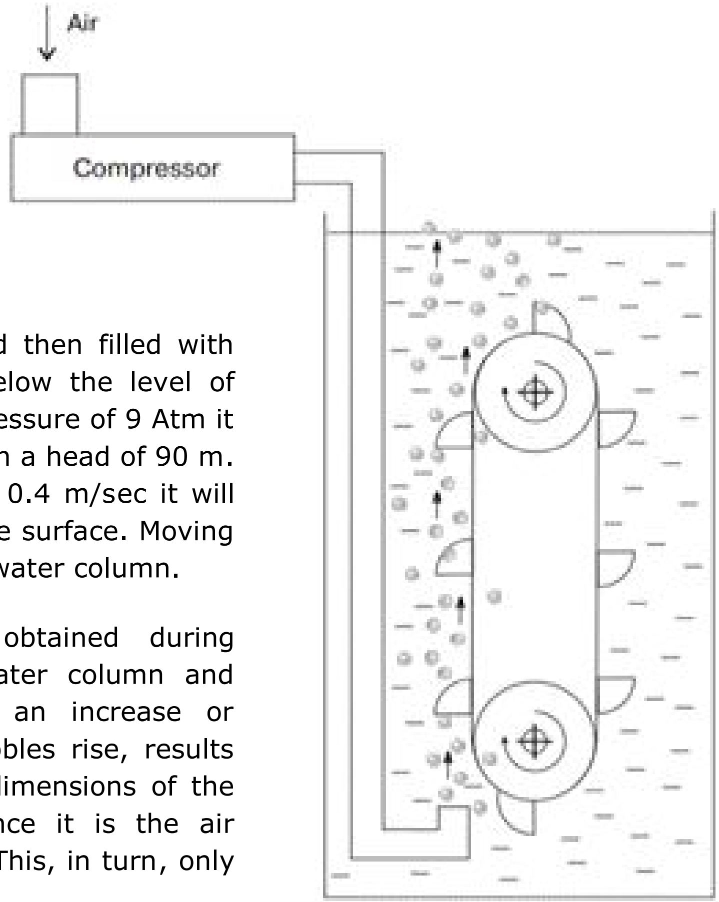

Fig. 3. A scheme of a generator based on floats

Floats are released from the air and then filled with water at a level that is situated below the level of water in the engine case. At an air pressure of 9 Atm it may be fed under a water column with a head of 90 m. If the air bubbles rise at a speed of 0.4 m/sec it will take 225 sec for a bubble to reach the surface. Moving air will be present at all levels of the water column.

This figure of 0.4 m/sec was obtained during experimental evaluations. If the water column and compressor output remain stable, an increase or decrease in speed at which the bubbles rise, results only in a change in the horizontal dimensions of the floats (their length and width), since it is the air volume that increases or decreases. This, in turn, only increases or decreases the force, not influencing the capacity of the pneumohydraulic engine.

The possibility to change the horizontal dimensions of the floats allows making floats of a needed volume preserving the water column.

The volume of air on the output of the compressor's pressure tube at a depth of 90 m will total (taking into consideration the atmospheric pressure):

0.167 (m^3/sec) / 10 Atm = 0.0167 m^3/sec

…since the pressure of a 10-meter water column will equal 1 Atm and due to the fact that an increase in the volume of air by the value of the initial volume takes place every 10 meters the air rises. If the air volume remained permanent, at the moment of reaching the surface its volume would be:

0.0167 (m^3/sec) x 225 sec = 3.757 m^3

Taking into consideration the volume of air at the moment it reaches the surface, its total volume will amount to:

3.757 m^3 x 10 Atm = 37.57 m^3

Taking into consideration the coefficient of thermal expansion, its volume will total:

37.57 m^3 x 1.2 = 45.084 m^3

The buoyancy force of a 1 m^3 of air equals 1000 **kgf** [see footnote[227]], the amount of work performed by this volume of air as it rises will amount to:

45084 kgf x 0.4 m/sec =18033 kgf x m/sec

or 18033 kg x fm/sec

Since 1 kg - fm = 9.81 W, the result of recalculation is the following:

18033 kg x fm/sec x 9.81 =176903.73 W or 176.9 kW

By adding no less than 30% of the energy that is returned, obtained due to the reactive force that is created during the filling of a float with air, to the energy that is received, we get:

176.9 kW +18 kW = 194 kW

We obtained the output energy exceeding the input energy by a factor of 3.4.

The mechanical energy efficiency of a pneumohydraulic engine will be rather high since during operation the engine is well lubricated by water, while the floats are mutually balanced. The energy efficiency of the compressor is taken into account during consideration of the compressors engine capacity. The pneumohydraulic engine is equipped with a brake that makes it stop during operation. When the engine stops, air is still present in the floats, which means that no energy will be consumed on the next start-up since the engine will be put in operation by the air left in the floats.

In our calculations, we proceeded from parameters of a serially produced compressor, able to feed air under a water column with a head of 90 m. This is a way to increase the effectiveness of hydroelectric stations by means of installing pneumohydraulic engines in pontoons at water-storage ponds. Increasing the effectiveness of hydroelectric stations by using tail ponds is considered in the description of the Patents claimed in Germany.

The design of the pneumohydraulic engine is remarkable for its low steel intensity, thus making it very light. Any river, pond, spring, thermal source or cooling tower may become a source of energy. A leveling of the water temperature at hydroelectric stations will become possible be means of blending lower, more warm water sheets and cold upper water sheets. The process will be accompanied by a simultaneous extraction of heat from the water. The most important point is that there will be no need to economize energy, since we do not amplify the natural energy imbalance by using a natural non-equilibrium. On the contrary, we restore it by getting rid of the consequences of thermal pollution. As for the solar energy, we do not spend more of it than we obtain.

---

[227] kgf: Kilogram-force (or kilopond) is a gravitational metric unit of force.

Calculation of Low Wattage Installations

We considered a method of obtaining energy in industrial conditions, but there is a great need for energy installations with a wattage of 3-4 kW. Let's try to estimate their sizes. Take an installation with a head of water column equaling 2 m. Using the same type of compressor (only for calculation) we may find out the capacity of the compressor engine needed to feed air under a 2-meter water column:

N = (2 m x 56.5 kW)/(90 m + 10 m) = 1.131 kW

The compressor output — 0.167 m^3/sec

A 2-meter water column creates pressure equaling 0.2 Atm. Then the water volume at a depth of:

2 m will amount to (taking into consideration the atmospheric pressure):

0.167 (m^3/sec) / 1.2 Atm = 0.139 m^3/sec

The time needed for a bubble to rise equals:

2 m / 0.4 (m/sec) = 5 sec

The volume of moving air that will be present in the floats of a pneumohydraulic engine in 5 seconds (taking into account the increase in volume as the air rises and the thermal expansion coefficient) will total:

0.139 (m^3/sec) – 5 sec x 1.2 Atm x 1.2 = 1 m^3

The amount of work performed will amount to:

1000 kgf x 0.4 m/sec = 400 kgf x m/sec

The amount of work per second equals the power.

Since 1 kgf = 9.81 W, the capacity will be:

N = 9.81 W x 400 = 3924 W = 3.924 kW

By adding 30% of the power returned, we get:

3.924 kW + 0.34 kW = 4.263 kW

If the mechanical energy efficiency equals 0.9, we get the following capacity:

N = 4.263 kW x 0.9 = 3.84 kW

We obtained output energy exceeding the input energy by a factor of 3.4:

3.84 kW / 1.13 kW = 3.4

In order to once again make sure of the effectiveness of the proposed method of obtaining energy, let us compare its effectiveness with that of a storage plant, in which water is pumped to a high-level storage pond by means of a pump or a reversible hydroset[228] and then used at a lower level in a turbine.

In this case, if the energy efficiency factor amounts to 100%. it means that we obtained an amount of energy that equals the amount of the energy consumed. Let's calculate the capacity of a pump engine needed to lift water to the level of 90 m, the output of which is 0.167 m^3/sec:

N = (9.81 x 0.167 m^3/sec x 90 m)/0.75 = 196.5 kW

Let's compare the power obtained by a pump engine to that obtained by a compressor engine with a capacity of 56.5 kW and air output of 0.167 m^3/sec.

The latter can displace the same amount of water, lifting it to a level of 90 m and feeding it to a turbine. An amount of power equaling 196.5 kW is obtained, which means that 3.5 less energy is spent.

Besides, the moving air that remains throughout the head of the water column will also perform work, which is confirmed by the aforecited calculation.

The possibilities of implementation of the proposed method are reflected in the diagrams Fig.2a and Fig.2b shown below.

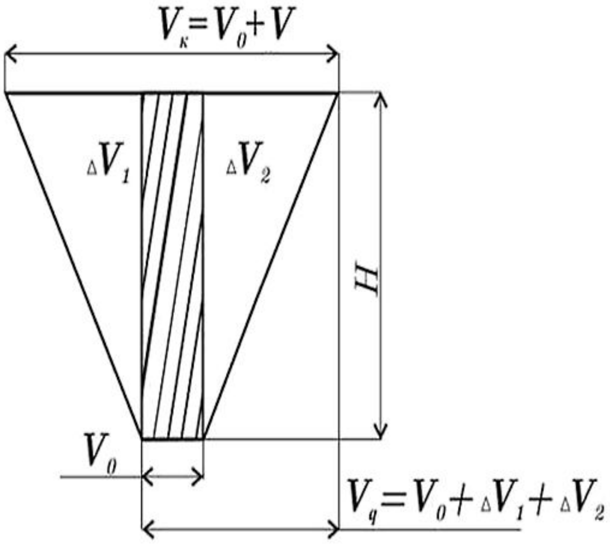

Fig. 2 a

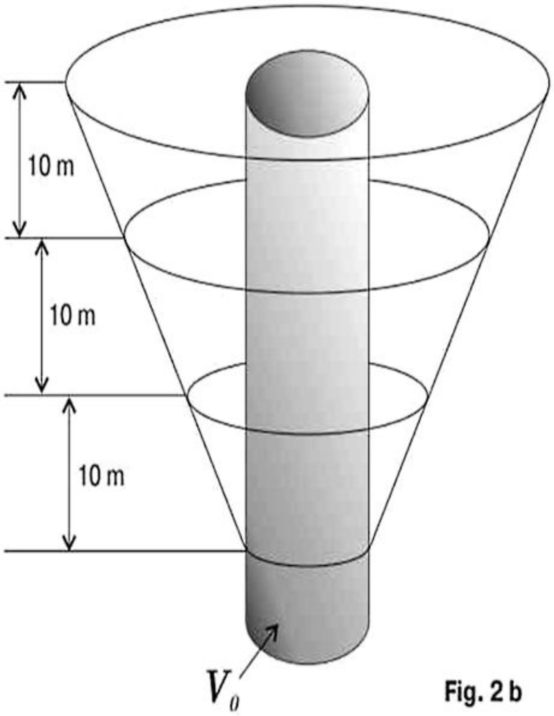

Fig. 2 b

---

[228] Hydroset: I think he refers to a hydraulic pump (rare use in English).

It can be seen from this diagram that the buoyancy force manifests itself starting from the volume Vo. The cross-hatched part of the diagram (Fig.2a) is a water column H, to overcome which the energy generated by the compressor is spent. Vo is the volume of water at a depth of H; Vk is the volume of air, expanded due to the fall in pressure as air rises Vq is the active air volume. The diagram shows that the volume of active air in a pneumohydraulic engine equals Vq, while the volume Vk is essential for a pneumohydraulic turbine, since it operates on a displaced volume of water. This fact explains the difference in their effectiveness.

The inexhaustibility of the energy source, its absolute environmental friendliness, the ease of production and ***quick payback*** due to the ever-growing need for energy provide for effective marketing of the proposed construction, while the diversity of designs provide for a wide area of application.

Thanks to Mr. Detlef Dohmen for sharing the theory and calculations of the Kinetic Power Plant.~Ozzie

This story is still unfolding, so please follow energy forums and the company's website http://rosch-innovations.de/

Spiteri Water Pump

Joe Spiteri Sargent of Malta (European Union) has developed the Spiteri Water Pump (SWP), an innovative engine to extract mechanical power from the repeated upthrust of a buoyant body submerged in water. Validated in 2008 by MECB Ltd. – download report: www.joespiterisargent.com/wp-content/uploads/2011/04/inventions_claim_report.pdf

The SWP is covered by Malta Patent PAT/3523; European Patent App. № 07789537.3, and International Patent App. PCT/IB2007/002097 (WO 2007/141653).

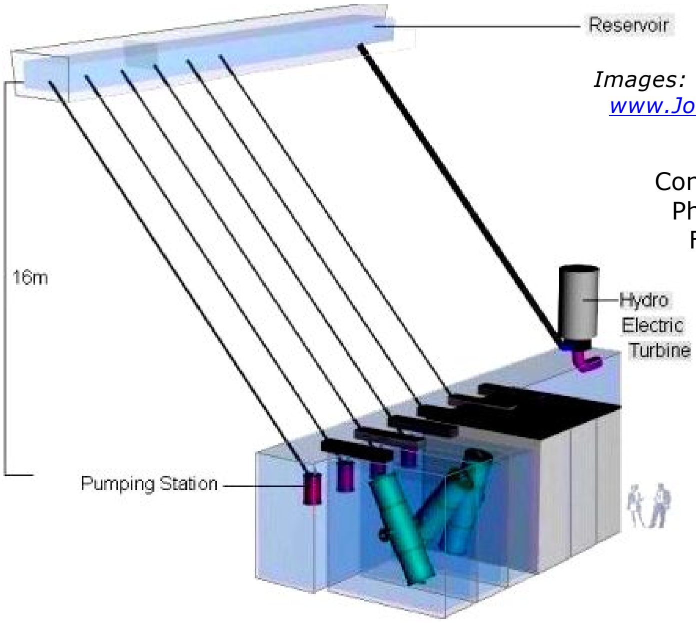

Images:
www.JoeSpiteriSargent.com

Contact the inventor:
Ph.: +356 7989 6667
Fax: +356 2180 1221
E-mail: info@joespiterisargent.com
Web: www.joespiterisargent.com

The next page provides sample drawings from the Malta Patent and an award given to Spiteri at the European Parliament in Brussels.

This Spiteri invention won a national award: ***"Maltese energy invention wins international award"***
(Times of Malta, June 1, 2008)

"The Spiteri Water Pump, a fuel-free, electricity-generating machine, walked away with the national prize during an awards ceremony held at the European Parliament in Brussels."

"A total of 853 project submissions were made from 109 countries."

"Developed by Joe Spiteri Sargent, the machine operates under a water surface and harnesses latent hydrostatic energy naturally present in a body of water, transferring it to produce an artificial waterfall to produce electricity via a hydro-electric power system. Present for the 2007 Energy Globe Award ceremony were Mr Spiteri Sargent and hydrologist Marco Cremona, who was also involved in the project."

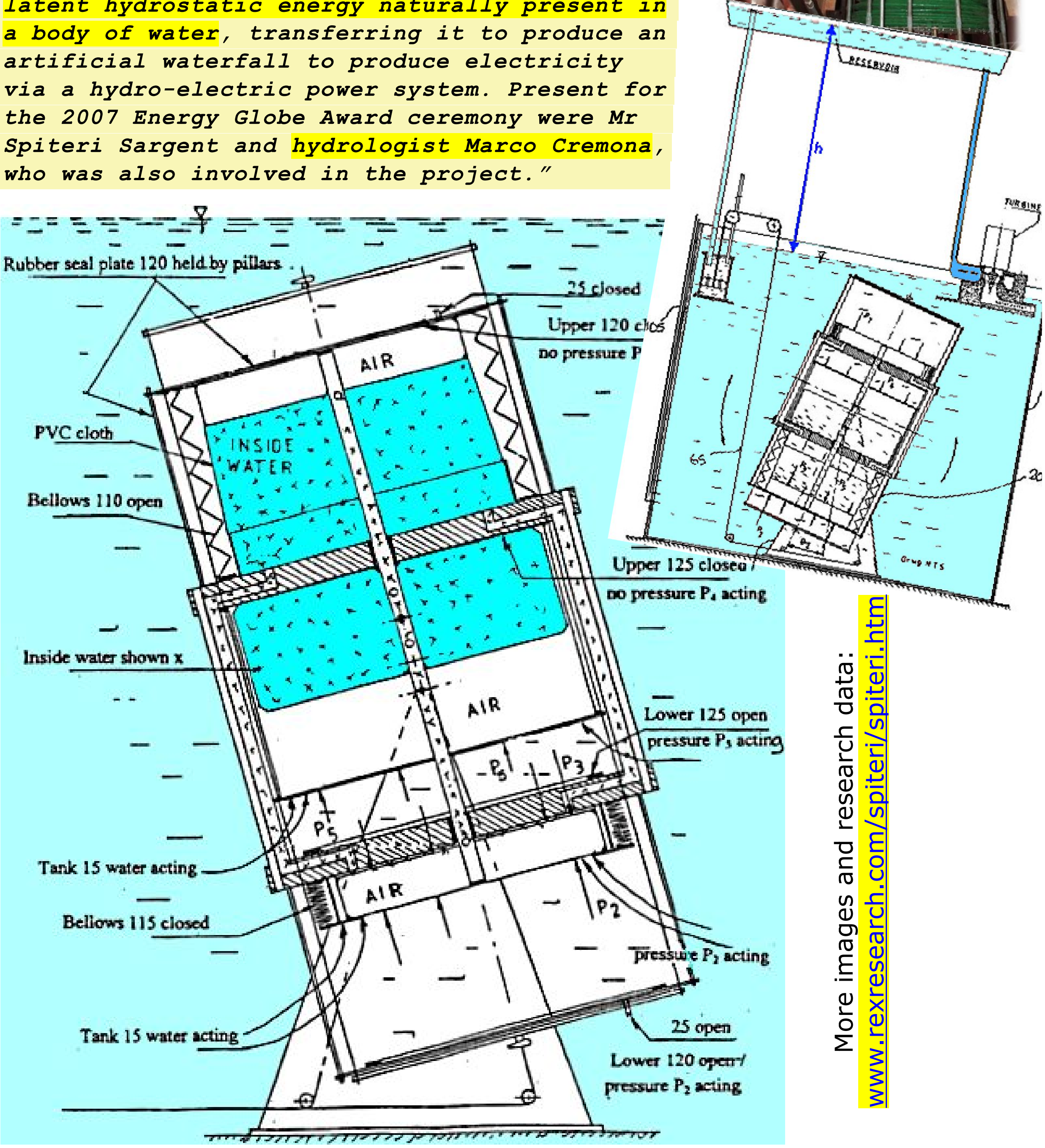

More images and research data:
www.rexresearch.com/spiteri/spiteri.htm

Chapter 33.
EMERGING: New Waterfuel Technologies still in R&D

Note: some of the claims appearing in this chapter have not yet been fully validated

Technologies that Have Yet to Mature

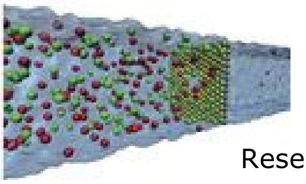

Cheap electricity from water, Salt, and a 3-atoms-thick membrane *(2015)*

Researchers at EPFL (Ecole Polytechnique Fédérale de Lausanne – the polytechnic school of Lausanne, Switzerland) developed a system that generates electricity from osmosis (sweet water moving through a molybdenum disulfide membrane toward salt water) with unparalleled efficiency. Featured in Nature (DOI: 10.1038/nature18593), it has a HUGE POTENTIAL despite (probably) low costs; with a $1m^2$ membrane produce electricity to power 50,000 light bulbs. More: www.eurekalert.org/pub_releases/2016-07/epfd-egw071116.php

Extracting Useful Energy from Water Evaporation

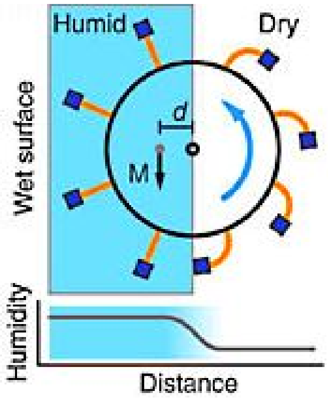

Simple devices made of bacterial spores, glue and plastic, may allow capturing of energy from evaporating water. This video https://youtu.be/Vj2kuZm-aCA explains the process. In March 2016 the presenter, Ozgur Sahin (photo below) – the Associate Professor of Biological Sciences & Physics at Columbia University who has led this research to a scientifically proven model – won the "Young Investigator Award" from the Office of Naval Research in Arlington, Virginia (USA). Well done! Now this needs to be followed and supported, as this is obviously a clever and non-polluting way to extract Free-Energy from the environment.

- Science Paper title: "Scaling up nanoscale water-driven energy conversion into evaporation-driven engines and generators"
- Authors: Xi Chen, Davis Goodnight, Zhenghan Gao, Ahmet H. Cavusoglu, Nina Sabharwal, Michael DeLay, Adam Driks and Ozgur Sahin
- Published: Nature Communications, 6:7346 (June 2015)
- Download: http://dx.doi.org/10.1038/ncomms8346 (Website: www.extremebio.org/)
- Video: https://www.youtube.com/watch?v=Vj2kuZm-aCA

Wave Power in a Box

Official Translation from Persian
The Judiciary
Deeds and Lands Registration Organization
Department General for Registration of Companies and Patent Rights

LETTERS PATENT

A Seesaw Device for Using Back-and-Forth Liquid Wave Energy; Generated Energy Higher than the Initial Input Energy

is registered in the name of

HASSAN AMIRI

Would you give any credit to a Patent issued by the Iranian Government? Many people around the world have been led to believe that Iran is a state of pure evil and this is far, far from the truth. I personally know Iranians who are very kind and highly educated, and they tell me that most of their nation are the same. Anyway, I wanted to tell you about this Iranian inventor, Hassan Amiri, who was granted an official ← Patent for his Waterfuel invention.

Basically, claims Amiri, the motion of the waves can be harnessed to produce excess energy even on a small scale – he demonstrates on a system that has only 75-80 liters (~20 gallons) of water. I haven't examined his invention first hand, but if you ever see a demo or build one and you're standing there scratching your head for a possible explanation, then let me tell you that the energy may simply be COLLECTED BY THE WATER while it moves. We've discussed other systems acting on this principle.

Amiri's invention is explained in this video: https://youtu.be/q-QEH9m3AME

MY SIMPLIFIED ANALYSIS (this is Ozzie speaking, not Mr. Amiri): Refer to the video; the base mechanism was designed to rock the water container. As the water rocks from side to side, gravity plays its part but the water naturally does what water does – it creates a wave peculiar to water (remember the conclusion of 0 – water does not react like any other substance). As the water moves, it is claimed to convert gravity potential force to kinetic energy; in other words, the "push" of the wave is greater than the force needed to start its motion. No electricity involved – energy can be mechanically picked up from the flywheel.

Now let's move to the flywheel spring killers moved and stored it by force rotation in our spring.

Can it be perfected? Please support this inventor (contact below) and let me know:

- Inventor: Mr. Hassan Amiri
- Phone: (Iran) +98-935-267-1086
- Email: hassanamiri68@gmail.com
- Video Gallery: www.youtube.com/channel/UC77WGMOW-k_hIly0NSgDLuQ

Wave Power on a Grand Scale

This story spans many countries that have intimate relations with the sea: United Kingdom, Denmark, Sweden, Brazil, Asia and others. The idea of collecting wave power has fascinated inventors for many years, and many small devices have been built. Now that Free-Energy is not a dirty word anymore, the scale went up and it seems that many players have come up with brilliant ideas of their own.

I cannot possibly cover all the systems – but they are all MASSIVE and appropriately covered MASSIVELY by the media, attracting a growing number of investors and government interest as well. Visit Google and search for wave power (28,500,000 results), tidal energy (4,110,000 results), ocean energy (4,150,000 results) and ocean wave power (8,300,000 results) and together with YouTube videos you see the "ocean" of such grand-scale projects. Here I picked up just a few random examples, some in the idea stage and some pretty much ready to roll and even exported to other countries:

SCOTLAND

PORTUGAL

ISRAEL

OREGON, USA

SOUTH AFRICA

UK+SINGAPORE

OREGON, USA

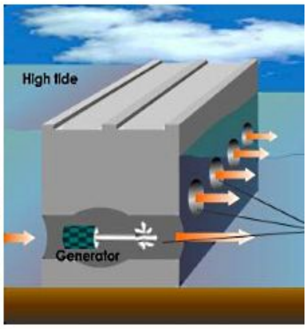

FRANCE

Wave/Ocean Power is not without problems and factors to carefully calculate, especially when considering its grand scale: high initial investments, safety of marine life as well as people, choosing the right site(s) and above all (I think) trying to calculate which of these newer and older developments will bear the best fruits for each dollar invested.

Time will tell the real winner, but the overall direction is promising and adds to all Cleantech, not subtracting from it. I consider this group to be real Waterfuel, not only because the machines and structures deal with water-to-energy, but also because hydrogen and HHO can be combined for purposes of energy storage, boosting efficiency and ecology. All ideas welcome – the engineers will know what to do with them.

Lost Waterfuel Tech Waiting for Revival

Nitinol Engine Works on Cold+Hot Water

First watch: https://vimeo.com/45924783 (alternative https://youtu.be/ZoAFc_DeWVQ or https://youtu.be/oKmYqUSDch8) to better understand the rest of this section. Nitinol is a metal alloy of nickel and titanium that exhibits two unique properties:

1. Shape Memory Effect – the ability of Nitinol to undergo deformation at one temperature, and then recover its original, undeformed shape upon heating above its transformation temperature.
2. Super elasticity – occurs at a narrow temperature range just above its transformation temperature; in this case, no heating is necessary to cause the undeformed shape to recover, and the material exhibits enormous elasticity, ~10X-30X of ordinary metal.

When heated and cooled again, Nitinol changes its crystalline structure as shown here. Simplified definitions: 'austenite' means it is stable at high temperatures while 'martensite' refers to its cold and hard state. This unique transformation loop during its cooling/heating cycle makes it useful for a very unique type of Waterfuel device called 'Nitinol Engine' or 'Banks Engine'.

Demonstration model heat engines have been built which use Nitinol wire to produce mechanical energy from hot and cold heat sources.

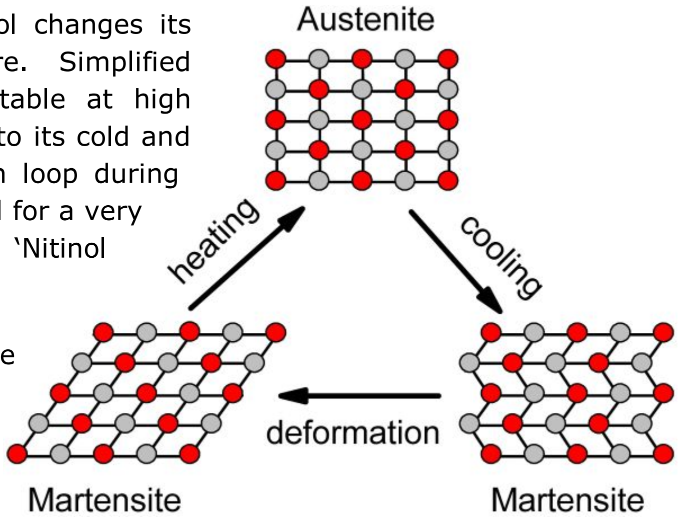

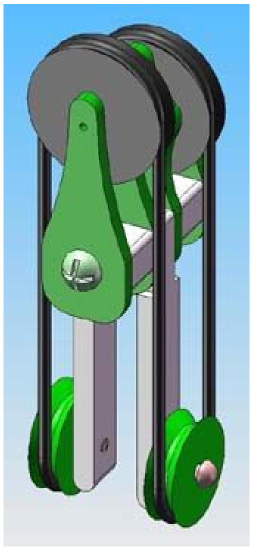

A prototype commercial engine was developed in 1973 by engineer Ridgway M. Banks at Lawrence Berkeley National Laboratory, California (USA). On May 29, 1984, Banks was granted a US Patent № 4450686 (www.google.com/patents/US4450686, see next page) for a "Single Wire Nitinol Engine" where he refers to his own Patent № 4257231 and others by **US NAVY** and **US Dept. of Energy**. Purchase these low-cost working models and see it in action:

- ✓ www.imagesco.com/nitinol/heat-engine.html
- ✓ www.amazon.com/Nitinol-Memory-Metal-Heat-Engine/dp/B00HQ283T0
- ✓ www.amazon.com/Images-SI-HE-01-Nitinol-Engine/dp/B000796XU0
- ✓ http://ice.chem.wisc.edu/Catalog/SciKits.html - booklet, wires.

Studies on the practicality of further development were made and published by NASA, U.S. Department of Energy and others: https://arxiv.org/ftp/arxiv/papers/1206/1206.3733.pdf and http://www.science.gov/topicpages/n/nitinol+heat+engines.html

Other publications:

- “The Banks Engine” by Banks, R. (1975). Die Naturwissenschaften 62 (7): 305–308. doi:10.1007/BF00608890. https://www.researchgate.net/publication/226455964_The_Banks_Engine
- “Metals that Remember”, Popular Science, January 1988
- “Engine Uses No Fuel”, Milwaukee Journal, December 5, 1973
- ”The Individualist” documentary about Ridgway M. Banks, watch on Vimeo https://vimeo.com/45924783

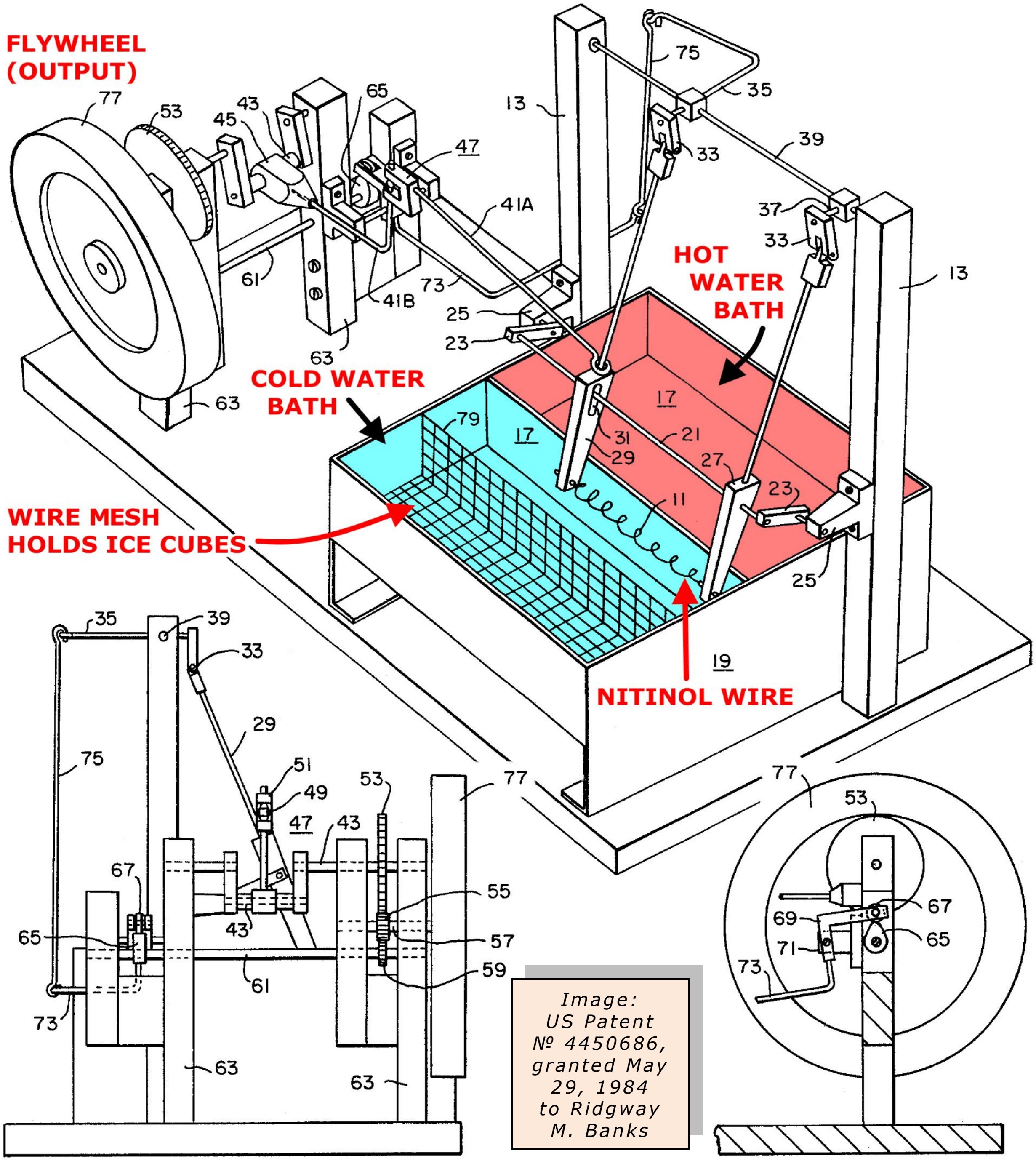

Image:
US Patent
№ 4450686,
granted May
29, 1984
to Ridgway
M. Banks

Acoustic Resonance (New Zealand): 'Sonic Boiler' Boils Water in 1 Sec While Heater Itself Stays Cold

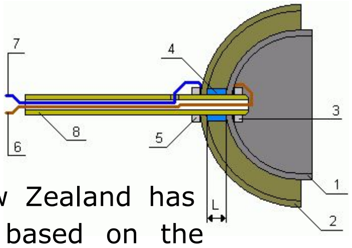

Since the 1940's, Peter Davey of New Zealand has been developing a heater invention based on the principles of telekinesis… no, it's not about moving objects with your mind. The word 'telekinesis' means moving something – causing motion – from a distance; in this case, HEATING BY SOUND WAVES. Sometimes called 'Sonic Boiler' because it used low-power acoustic waves to boil a glass of water "in a matter of seconds". They say he already got it patented back in 1944, but I only have the improved design that he patented later (granted 1950 by the New Zealand Patent Office):

Inventor: Peter Daysh Davey, Patent № NZ92428 (New Zealand) "An Improved Electrical Immersion Heater" – 1950

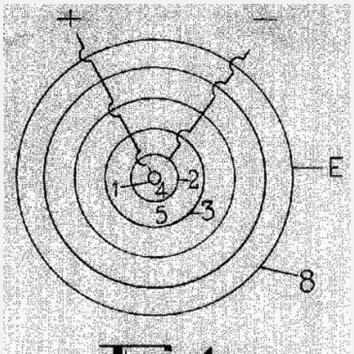

FIG-1-

ABSTRACT: This invention relates to electrical immersion heaters and more particularly to electrical immersion heaters which utilize the conductivity of liquid for their operation. --- The objects of this invention are to provide an improved electrical immersion heater which is very rapid in raising liquid temperatures when in use and which will not when in use undergo any ill effects if the liquid in which it is placed should evaporate entirely or the liquid supply is cut off; but will operate again immediately further liquid is provided for the heater. --- According to this invention the improved heater comprises a central electrode, circular electrodes arranged concentrically about the central electrode, means for holding the circular electrodes so that they vibrate and an electrical connection from one side of a source of alternating current to the central electrode and to electrodes alternate from the central electrode, and an electrical connection from the other side of a source of alternating current to the circular electrode adjacent he central electrode and to circular electrodes alternate from the circular electrode adjacent the central electrode.

Download full Patent: http://rexresearch.com/davey/davey.htm (can only be found at this link as the New Zealand Patent Search www.iponz.govt.nz/cms/patents only goes back to 1966).
More data & energy calculations: http://rexresearch.com/davey/davey.htm

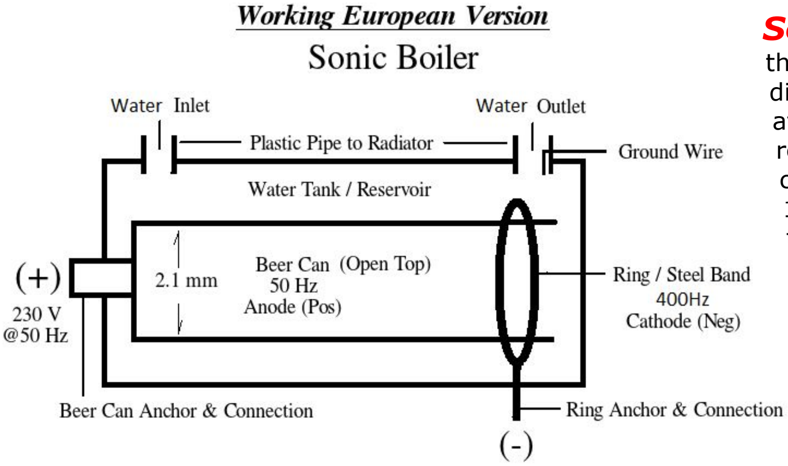

Serbia*(?)* Peter Davey didn't share the secrets of his invention so they died with him in 2008. One replication attempt is shown in this diagram, reportedly by Professor Savić, claimed to multiply its energy input 12X. Simple structure: beer can is the **anode,** gets 220 VAC 50 Hz, metallic water reservoir gets **neutral** voltage, steel ring is the **cathode**, gets unknown voltage of 400 Hz. Tesla's Patent № 685012 from 1901 has tips on maximizing the resonance.

Acoustic Resonance (France): Low-Cost Device Gifted to the World by Jean-Christophe Dumas

LE DAUPHINÉ LIBÉRÉ | JEUDI 10 AVRIL 2014 | 13

ARDÈCHE MÉRIDIONALE

JOYEUSE |

Jean-Christophe Dumas offre une invention au monde entier

While seeking validation for Davey's invention, on Rex Research I ran across a report by George Wiseman, the world's expert on Brown's Gas, and he confirmed by own experimentation that it can indeed heat water with half the energy compared to normal electric heater, and that it was the "Dumas Effect" at play. This hint led me to some practical data. This French newspaper headline says *"Jean-Christophe Dumas offers an invention to the entire world"* but he got lots more coverage online and offline. His Sonic Boiler was proven to give out 16% more energy than was put in, as verified on Sep. 14, 2013; download the 22-page validation report: http://rue89.nouvelobs.com/sites/news/files/assets/document/2014/12/2526708340_0.pdf

IPOLIS AVOCATS

CONF IEL

5. RESULTAT OBSERVE :

Le dispositif a perm duire **858971 joules** et il lui a été injecté **741000 joules.**

Soit, Qp/Qc= 1.1592

ce et au vu du résultat des calcu

dispositif a permis la production d'une énergie

jecté que 741000 joules.

« L'effet Dumas » a été expertisé à Nice le 14 septembre 2013. Sous contrôle de huissiers, l'expertise était dirigée par le Pr Leroy, thermicien, Jean-Michel Reix, directeur de programme pour l'agence spatiale européenne, et Yvan Roche ingénieur chez Thalès.

116% was demonstrated and accurately measured; the black screen capture states that the validation was performed under control of bailiffs, led by Professor Leroy, heating engineer, Jean-Michel Reix, program director for the European Space Agency, and Yvan Roche, engineer at Thalés (French aerospace corporation)

- Watch: https://youtu.be/VFVRhfm0pSI – public demonstration by Dumas and his associates in Joyeuse, France in April 7, 2014 (+interview of Dumas at home)
- Watch: https://www.youtube.com/watch?v=UT36PaqqfTU (note: the movie claims that this device uses the Casimir Effect, but I could not verify such correlation).
- https://www.facebook.com/Effet-Dumas-Energie-libre-270688943092791/

Independent experimenters gave mixed reports (some much higher than Dumas') but as I said George Wiseman of Eagle Research (Canada) said it's a real effect in water which is different than Brown's Gas. Potential applications: water/space heating, desalination, generating electricity, more. Dumas kept costs very low, a few Euros per unit. Below are replication instructions. http://projectavalon.net/forum4/showthread.php?70685-The-Dumas-Effect--FREE-ENERGY---***Certain measurements are critical, and further fine tuning may be necessary.*** *Download the complete drawings and instructions (in French) from: www.academia.edu/7259093/Resonanz_Generator_Dumas*

1) Get 3 steel hemispheres of the same size (galvanized steel if possible; other metals will do but could deteriorate over time). For pinpoint accuracy the spheres could be 3D-printed. Weld two hemispheres to make a tight sphere.
2) Weld a threaded rod to the center of the sphere. Once welded, surround the base of the rod with insulation. Accurate centering is important.
3) In the center of the remaining hemisphere drill a hole to fit the rod+insulation. Also drill 2-mm holes which will make the hemisphere look like a kitchen colander (the drawings and this photo show seven longitude lines, each having three 2-mm holes).
4) At the bottom of the welded rod put two plastic washers and install the hemisphere as shown.
5) Screw a nut on the rod and adjust the gap between the upper hemisphere and the welded sphere as close as possible to 1.61 mm (Golden Ratio/Fibonacci 1.61803398875 expressed in mm). If the spacing is much lower (0.6-0.9 mm) then it will short circuit; if larger than 1.8-1.9 mm, the effect will not occur.

6) Connect an electrical wire (220 Volt, 50Hz, 16 Amp) to the rod; shown in red:
7) Using an electric lug (see drawing) connect the neutral (shown in blue) for a direct contact with the upper hemisphere.
8) Put a switch on the wires and connect the wires to an electrical outlet protected by a circuit breaker[229].

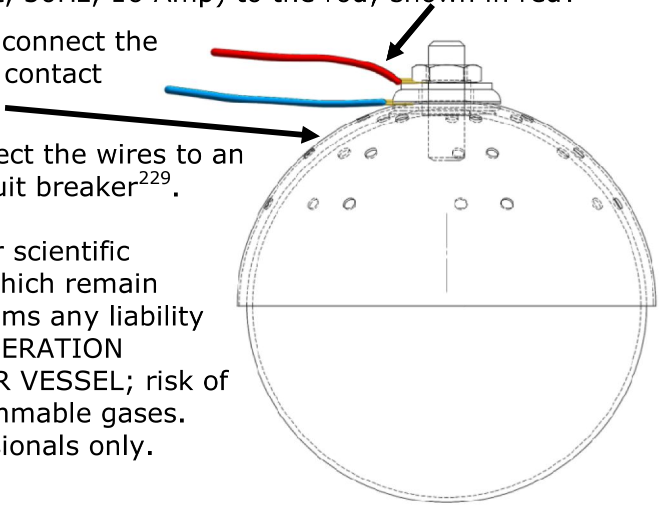

WARNING/DISCLAIMER (abridged): for scientific exploration… several physical effects which remain poorly understood. The inventor disclaims any liability in case of possible misuse. DURING OPERATION NEVER TOUCH THE DEVICE, WATER OR VESSEL; risk of burns, electric shock, short circuit, flammable gases. Must be made and operated by professionals only.

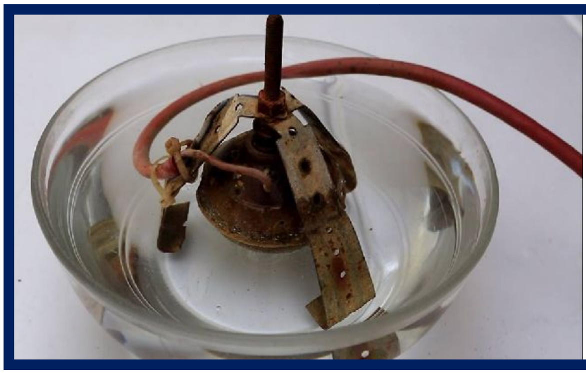

APPLICATION: Immerse the device in water (a jar will avoid splashing). HANDS OFF BEFORE OPERATION!! Turn on the electricity and it will heat up the water. No danger if the water totally evaporates – as soon as more water is provided, the Dumas Effect will resume. I'm sure it can be upscaled and industrialized. (~Ozzie)

---

[229] Make sure you have anti-shock protection; "Earth-Leakage Circuit Breaker" (ELCB)

Chapter 34.

500 Years of Waterfuel, Hydrogen & Derivatives

Based on many sources and my own evaluation of diverse data

Four Highlights

1 Waterfuel *in the 1500's:* water vapor enhanced *external combustion* in Russian Masonry Stoves

The 'Russian oven' or 'Russian stove' (Russian: Русская печь) is a unique type of masonry stove that first appeared in the 15th century (ref: http://n-t.ru/nj/nz/1988/0107.htm) According to Russian masonry stove builder Sergey Polupanov from Tomsk, Russia (http://govindam.ru), in mediaeval times the Russians used water to enhance combustion in stoves. Water was placed ***beneath*** the burning logs, got heated by radiated heat and gave off vapor, which then went up ***through*** the combustion area and enhanced the combustion efficiency (ref: https://youtu.be/II1W9YtAvaI) The results they were getting were no different in essence than what we expect nowadays from Waterfuel in external and internal combustion alike:

1. ***Reduced fuel consumption:*** less wood was needed to get the same amount of heat,
2. ***Reduced pollution:*** far less frequent cleaning of the chimneys was required.

Michael Mironov recalls hearing the common Russian expression "Топить печь на-сухую" which translates to ***'burning wood in the stove on dry'*** (i.e., without water) but actually it meant to say ***'doing something stupid'*** – now it makes sense to him!

And this technology is alive in Russia!

500 years later, Russian inventor Vladimir Pocheevsky has developed several phases for a modernized version of the above, namely extending wood burning using a heterogeneous catalyst he named "Miracle Membrane."

Pocheevsky shares it widely by text/video/public speaking:

- Website: http://www.1958ypa.ru/ab.html
- Conference in Moscow for the *Regional Association of State Security Veterans* - https://yadi.sk/i/kAzKdtIzbhWLr

Contact Mr. Pocheevsky by phone 8-965-289-9676, or email rodnik-128@yandex.ru

2

The first recorded successes in decomposing water using electrolysis (using electric current to dissociate water molecules into Hydrogen and Oxygen): back in the year 1789, Dutch chemist Adriaan Paets van Troostwijk (1752–1837) and medical doctor Jan Rudolph Deiman (1743-1808) used an electrostatic machine and a Leyden jar (the first battery) for the first electrolysis of water. In 1800 it was done by renowned English chemist William Nicholson (1753-1815) and English surgeon Sir Anthony Carlisle (1768-1842, in photo)

3 Waterfuel is not new to internal combustion engines!

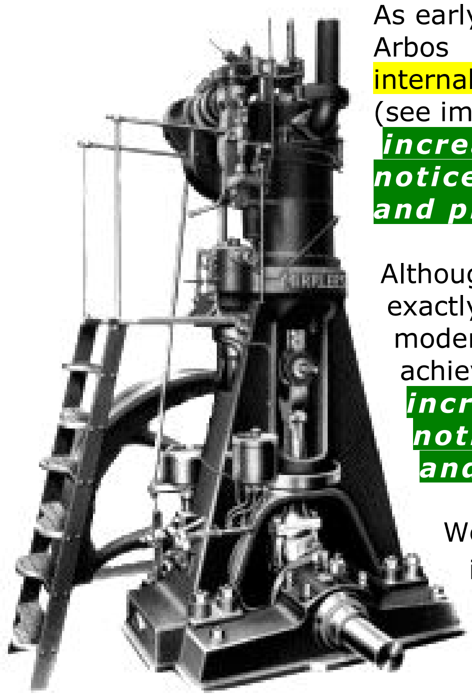

As early as 1863, US Patent № 40805 was granted to Jacques Arbos (Barcelona, Spain) for supplemental hydrogen in internal combustion engines. In 1865, the 'Hugon Gas Engine' (see image) was supplemented with WATER to…

increase its power output, prevent smoke, noticeably reduce its operating temperature and prolong the engine's life.

Although engines have changed dramatically, these are exactly the same things we're doing in this 21st Century with modern Waterfuel. We use our old friend – water – to achieve (surprise, surprise)…

increase engine's power, prevent smoke, noticeably reduce its operating temperature and extend engine's life.

Working models of the Hugon Gas Engine are displayed in Anson Engine Museum (Poynton, Cheshire, UK) and in the ***Conservatoire National des Arts*** (Métiers, France).

4 Automotive Waterfuel as early as 1916 or even earlier

American inventor Charles H. Frazer was granted US Patent 1,262,034 in April 9, 1918, which he filed in June 30, 1916. This is the oldest known Waterfuel patent for vehicle use – but as you can read in Chapter 13, he worded the Patent as if it was nothing new back in 1916! That same year, 1916, Physics & Electrical Engineering Professor Howard Monroe Raymond published his work 'Oxy Hydrogen Welding' in American Technical Society, Modern Shop Practice, Vol.1, that you can read in Chapter 23.

Often a reader or a student asks me: "Ozzie, if Waterfuel is as good as you say it is, then why hasn't anybody come out with it yet?"
I try not to laugh when I reply: *"My friend, this is HUNDREDS OF YEARS OLD!"*

Who coined the term 'Hydrogen Economy' – and WHEN?

Some say it was coined by electrochemist John Bockris during a talk he gave in 1970 at General Motors. Modern interest in the hydrogen economy can generally be traced to a 1970 technical report by Lawrence W. Jones of the University of Michigan. It also says that the term was proposed earlier by geneticist J.B.S. Haldane ***BACK IN 1923****. You can read Haldane's amazingly detailed description of a large-scale hydrogen economy in the paper "DAEDALUS or Science and the Future"* www.cscs.umich.edu/~crshalizi/Daedalus.html

Waterfuel & Hydrogen Timeline

The timeline laid below was gathered from many sources, among them the Energy Research and Development Authority of the New York Government www.nyserda.org, and other hydrogen and Waterfuel publications. I tried to highlight some of the many Waterfuel events in modern history. This list does not boast to be complete or fully accurate, and is here only to give you an overall perspective of the history of Waterfuel and hydrogen. If you think you should be added to this list in the next publication, email me and explain why. And our first date is…

12,000 BC??! – no, this is no joke. The next stop on this timeline will be the year ***300 BC*** which is much more believable, I admit, so if this far back in (pre)history makes you uncomfortable, jump to the next stop 3 pages down. I had serious doubts about this section but then I recalled that it's better to communicate than hush, and as my duty here is to expose Waterfuel as a diverse, very-long-term technology, I'm adding it in; history will say its final word.

Now to the point, there are **1,300 pyramids** in five continents around the world, with Egypt contributing "only" 120 pyramids to the total, Mexico ~250 more, China 300, Guatemala 300-400 pyramids… the complete list can fill up a new book:

HOW OLD ARE THEY? Some argue that the Brazilian pyramids (3,000 BC) predate the earliest Egyptian ones by several hundred years… Big deal! Because, what about the pyramid discovered in Java island in 2010 which is 8,000 years old? And the colossal "Pyramid of the Sun" discovered in central Bosnia, which could be as old as 14,000 years? Stephen Mehler http://adventuresunlimitedpress.com/ holds evidence that the technology is even twice as old as that (he mentioned 26,000 years). The reason why none of this was mentioned in your history lessons as well as mine, and why some scientists struggle fiercely against a mountain of evidence, is not the subject of this book.

BUT WHAT ALL THIS GOT TO DO WITH WATERFUEL? This is not mainstream of course, not yet, but many investigators estimate that there is more than enough evidence to *understand* the pyramids, at the least the big ones, as energy plants that created electricity by a combination of their structure and ***underground water streams,*** and that they couldn't work without water and aquifers. This indication qualifies the big pyramids, and specially the one at Giza, as ***"Ancient Waterfuel"*** on a grand scale.

The pyramids are indeed colossal structures (with the Bosnian "Pyramid of the Sun" being ***three times larger*** than the "big one" in Giza, Egypt). But how did they function? I studied the various explanations and findings, and the overall picture is one of power plants that served ***more than one function***.

The data below is only the tip of just another "iceberg" of information, and I recommend that you approach it with an open mind.

Function 1 – *Electricity* www.youtube.com/watch?v=XGoUpTDnZCo

The word Pyramidos in Greek means 'Fire In The Middle' – and for a good reason! By multiple existing evidence, Egyptians used electricity for lighting, gold plating, electromagnetics (energy transfer), and charging batteries such as the famous "Baghdad Battery". The pyramid of Giza seems to have been THE power plant that used to serve Northern Egypt 24/7 without much repair or further input. Its structure was cleverly constructed from the right combinations and shapes of limestone, granite, quartz and some metal to give properties of insulating, storing and conducting electricity and microwave through its shafts and halls. The many aquifers running under it were the very SOURCE of electricity, while the pyramid concentrated and transferred the electricity to its (now missing) golden capstone. One story goes that a vital component was an apparatus we came to know as the "Ark Of The Covenant" that fits perfectly into an empty recess in the heart of the Giza pyramid; when Moses stole it (oops, "took it"), the power plant stopped working, and the economy of Northern Egypt collapsed within 10 years.

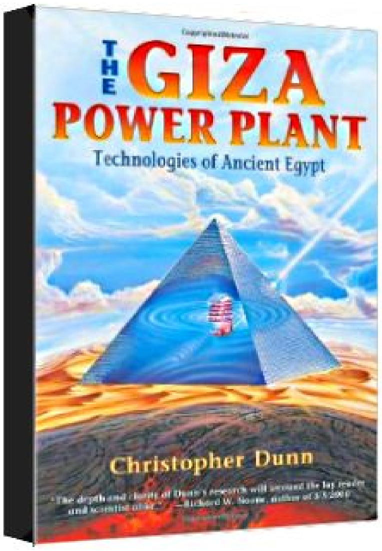

← Buy Christopher Dunn's book from Amazon: www.amazon.com/Giza-Power-Plant-Technologies-Ancient/dp/1879181509 and read all about it.

Function 2 – *Hydrogen Generator??* https://youtu.be/mMhIx6QEcp0 and (part-2) https://youtu.be/5QQ84fitxG4 – this old show from the *History Channel* reiterates more or less the same explanation about electricity. However, in addition to that, Christopher Dunn (www.GizaPower.com) explains his theory that dilute hydrochloric acid was coming down one shaft, and hydrated zinc chloride was coming down the other shaft, and when they combined together in the "Queen's Chamber" – they created hydrogen gas. Stephen Mehler (http://AdventuresUnlimitedPress.com/ and https://youtu.be/VoSbF1EbOFM) supports Christopher Dunn and says the Giza pyramid was designed 26,000 years ago or earlier, and that there was a HYDROGEN EXPLOSION around 12,000 years ago – and that THIS EVENT was the one that destroyed the Giza Power Plant. Dunn's and Mehler's research was also supported by Ukrainian physicist Dr. Volodymyr V. Krasnoholovets (Dept. of Theoretical Physics Institute of Physics, National Academy of Sciences, Kiev, Ukraine). So I guess Moses wasn't Giza's first disrupter… Don't get me wrong, I like the guy.

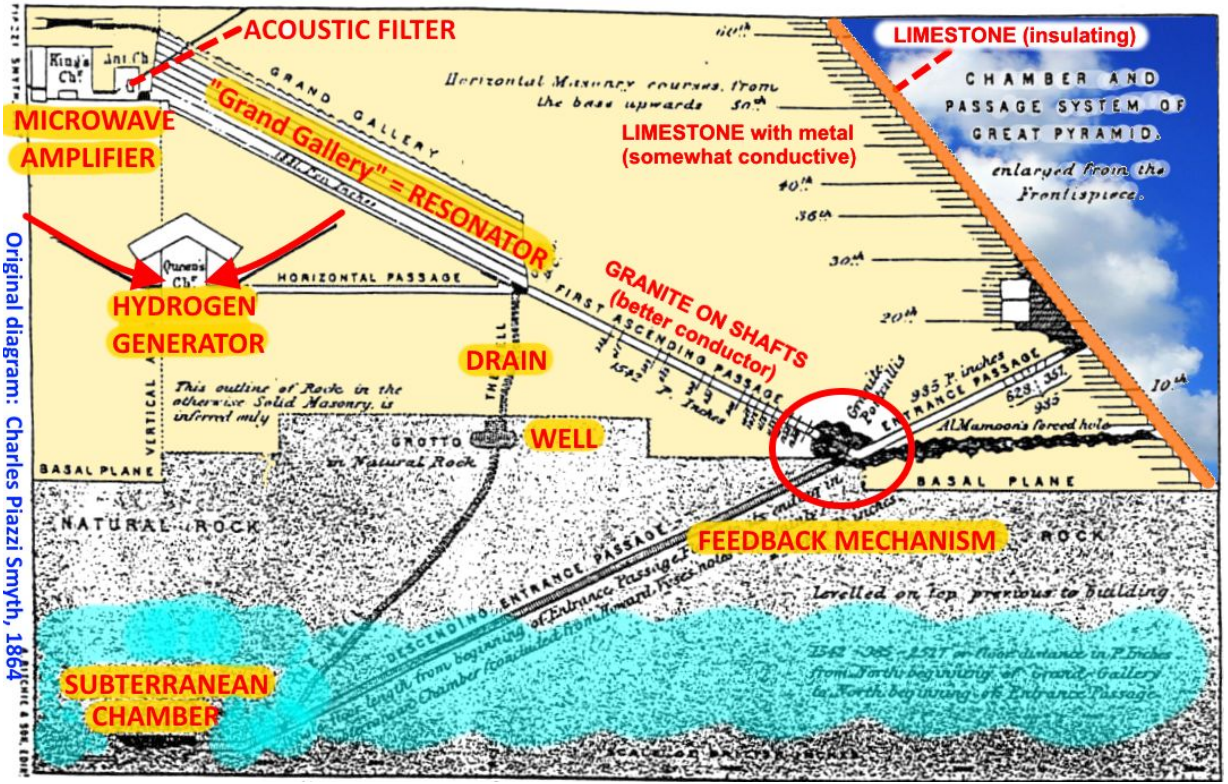

(This image is a compilation of several theories – given here for illustrational purposes. ~Ozzie)

Function 3 – *Universal Clock* This function is so immense but at the same time displays hard evidence that is impossible to ignore. And I don't mean the presenters or supporters display evidence; I mean, the function itself displays hard evidence! To understand this statement, watch "The Revelation of the Pyramids" (2010) created by Patrice Pooyard and Jacques Grimault – https://youtu.be/HiQ8l7Vbgic – available on DVD (watch out for the zone; may not fit USA players) and Blu-Ray discs from Amazon.com – highly recommended; watch multiple times to absorb the data.

Has anyone put it all together into a WORKABLE FORM?

This guy on YouTube brilliantly reverse-engineers the complete findings known to date about how the Giza Power Plant might have worked, and it is a fascinating water-driven design with no moving parts!

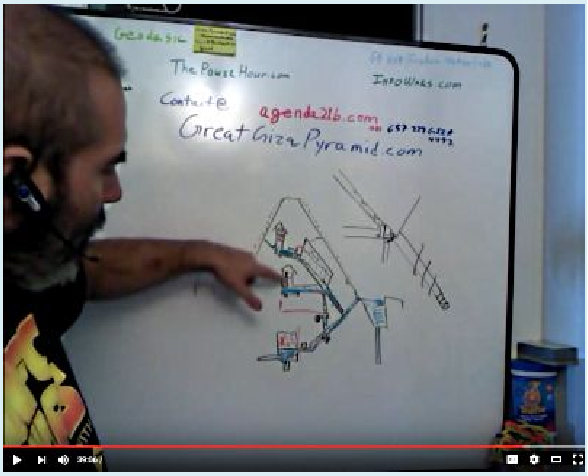

Images from his YouTube Channel

Why not try and replicate it today!? If you are Mr. Elon Musk or anyone like him who can take a brilliant idea and make it greater, please hire this guy and build us a pyramid or two. Or 1,300.

- Name: unpublished; the domain below is registered to John Angel, Huntington Beach, California (USA)
- Website: www.GreatGizaPyramid.com
- Email: contact@GreatGizaPyramid.com
- Skype: GreatGizaPyramid
- Phone [accepts text]: (USA) 657-229-4492
- 2-hour video: https://youtu.be/5F2gr0AwK8Y
- 49-minute video: https://youtu.be/apnpFx7sxdU
- Photo Gallery: http://photos.GreatGizaPyramid.com
- His complete Video Gallery www.youtube.com/user/GreatGizaPyramid/videos (partial view below) has more than enough information to get you interested:

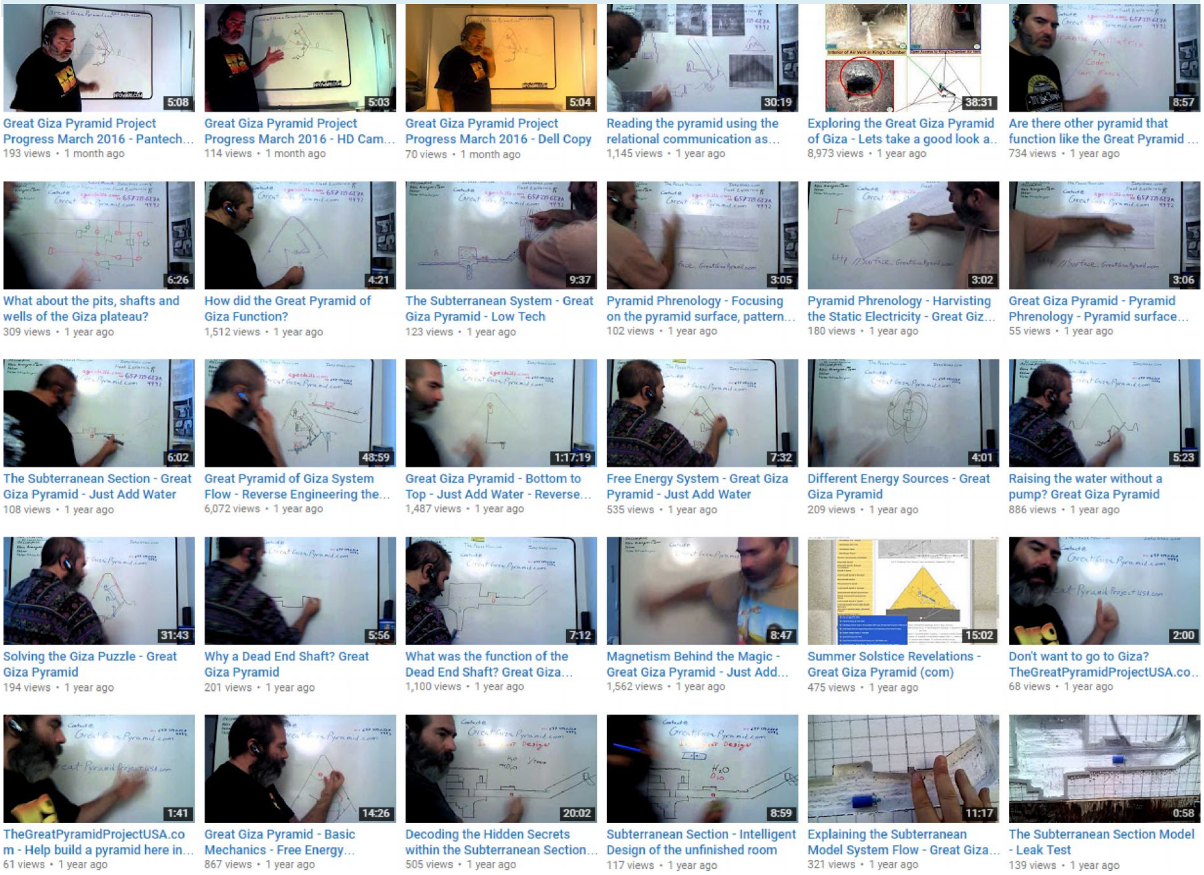

Great Giza Pyramid Project Progress March 2016 - Pantech...
193 views • 1 month ago

Great Giza Pyramid Project Progress March 2016 - HD Cam...
114 views • 1 month ago

Great Giza Pyramid Project Progress March 2016 - Dell Copy
70 views • 1 month ago

Reading the pyramid using the relational communication as...
1,145 views • 1 year ago

Exploring the Great Giza Pyramid of Giza - Lets take a good look a..
8,973 views • 1 year ago

Are there other pyramid that function like the Great Pyramid ...
734 views • 1 year ago

What about the pits, shafts and wells of the Giza plateau?
309 views • 1 year ago

How did the Great Pyramid of Giza Function?
1,512 views • 1 year ago

The Subterranean System - Great Giza Pyramid - Low Tech
123 views • 1 year ago

Pyramid Phrenology - Focusing on the pyramid surface, pattern...
102 views • 1 year ago

Pyramid Phrenology - Harvisting the Static Electricity - Great Giz...
180 views • 1 year ago

Great Giza Pyramid - Pyramid Phrenology - Pyramid surface...
55 views • 1 year ago

The Subterranean Section - Great Giza Pyramid - Just Add Water
108 views • 1 year ago

Great Pyramid of Giza System Flow - Reverse Engineering the...
6,072 views • 1 year ago

Great Giza Pyramid - Bottom to Top - Just Add Water - Reverse...
1,487 views • 1 year ago

Free Energy System - Great Giza Pyramid - Just Add Water
535 views • 1 year ago

Different Energy Sources - Great Giza Pyramid
209 views • 1 year ago

Raising the water without a pump? Great Giza Pyramid
886 views • 1 year ago

Solving the Giza Puzzle - Great Giza Pyramid
194 views • 1 year ago

Why a Dead End Shaft? Great Giza Pyramid
201 views • 1 year ago

What was the function of the Dead End Shaft? Great Giza...
1,100 views • 1 year ago

Magnetism Behind the Magic - Great Giza Pyramid - Just Add...
1,562 views • 1 year ago

Summer Solstice Revelations - Great Giza Pyramid (com)
475 views • 1 year ago

Don't want to go to Giza? TheGreatPyramidProjectUSA.co...
68 views • 1 year ago

TheGreatPyramidProjectUSA.com - Help build a pyramid here in...
61 views • 1 year ago

Great Giza Pyramid - Basic Mechanics - Free Energy...
867 views • 1 year ago

Decoding the Hidden Secrets within the Subterranean Section...
505 views • 1 year ago

Subterranean Section - Intelligent Design of the unfinished room
117 views • 1 year ago

Explaining the Subterranean Model System Flow - Great Giza...
321 views • 1 year ago

The Subterranean Section Model - Leak Test
139 views • 1 year ago

Also research-worthy is the pyramid works of Dr. Alexander Golod, Director of Hydrometpribor (http://abo.narod.ru/english.htm), Dr. Volodymyr Krasnoholovets from the Institute of Physics, National Academy of Sciences of Ukraine (his resume http://www.inerton.kiev.ua/resume.htm)and their colleagues. In the West their work is regarded as pseudoscience but in Russia and Ukraine they have received scientific recognition as well as funds and land to build 144-ft tall experimental pyramids.

And now we're back to the more "modern" timeline of Waterfuel:

- Circa 300 BC–200 BC – Chinese inventors, and their counterparts in Ancient Rome, began using water power with innovations such as: rotating flour mills, early paper-making, water-wheel powered hammers to process grain, ore, etc.
- 1625 – Flemish chemist, physiologist and physician Johann Baptista van Helmont was the first to describe hydrogen, using the word "gas." The composition of water, however, was not known yet. *(This is where we first meet modern-time tech).*
- 1650 – Swiss-born physician Turquet de Mayerne obtained a gas or "inflammable air" by the action of dilute sulfuric acid on iron.
- 1662 – Boyle's law (gas law that relates pressure vs. volume).
- 1670 – Robert Boyle produced hydrogen by reacting iron filings with dilute acids.
- 1672 – Robert Boyle published "New Experiments touching the Relation between Flame and Air."
- 1700 – French chemist Nicolas Lemery showed that the gas produced in the sulfuric acid/iron reaction was explosive in air (see 1650 – Turquet de Mayerne).
- 1755 – Scottish physician/chemist Joseph Black confirmed that different gases exist.
- 1770's – French engineer Bernard Forest de Bélidor published 'Architecture Hydraulique' which described vertical- and horizontal-axis hydraulic machines. However, Hydropower (energy generated by water motion) has been used since ancient times (over 2,000 years ago) to grind flour, spin cotton and other tasks. The old Schoelkopf Power Station near Niagara Falls (US side) began to produce electricity in 1881; by 1889 the USA had 200 hydroelectricity stations.
- 1766 – Hydrogen was first identified as a distinct element by British scientist Henry Cavendish after he evolved hydrogen gas by reacting zinc metal with hydrochloric acid. In a demonstration to the Royal Society of London, Cavendish applied a spark to hydrogen gas yielding water. This discovery led to his later finding that water (H_2O) is made of hydrogen and oxygen. Cavendish published in "On Factitious Airs" a description of "dephlogisticated air" and isolated a gas seven to eleven times lighter than air.
- 1774 – Joseph Priestley (English theologian, Dissenting clergyman, natural philosopher, chemist, educator, and political theorist) isolated and categorized oxygen.
- 1780 – Italian physicist Felice Fontana discovers the water-gas shift reaction (mixture of carbon monoxide and hydrogen creating 'water gas').

- 1783 – Antoine Lavoisier and Pierre Laplace measured the heat of combustion of hydrogen using an ice calorimeter.

- 1783 – French physicist Jacques Alexander Cesar Charles launched the first hydrogen balloon flight. Known as "Charliere," the unmanned balloon flew to an altitude of 3 kilometers. Three months later, Charles himself flew in his first manned hydrogen balloon.

- 1784 – Jean-Pierre Blanchard – first trial with a hydrogen balloon dirigible (lighter-than-air aircraft that has steering and some drive power).

- 1784 – Lavoisier and Meusnier invented the iron-steam process, generating hydrogen by passing water vapor over a bed of red-hot iron at 600°C.

- 1785 – Jean-François Pilâtre de Rozier, a French chemistry and physics teacher and one of the first pioneers of aviation, built the Rozière balloon hybrid (where the word 'hybrid' describes separate chambers for a non-heated lifting gas such as hydrogen or helium, while other chambers have a heated gas for lifting).

- 1787 – Charles's law (gas law that relates volume and temperature).

- 1788 (some say 1783) – Antoine Lavoisier gave hydrogen its name (from Greek: hydro = water, genes = born of).

- **1789** – Jan Rudolph Deiman and Adriaan Paets van Troostwijk using an electrostatic machine and a Leyden jar → for ***the first electrolysis of water.***

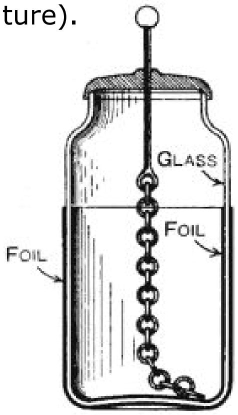

- 1800 – English scientists William Nicholson and Sir Anthony Carlisle discovered that ***applying electric current to water produced hydrogen and oxygen gases.***

  This process was later termed "electrolysis."
  Johann Ritter also decomposed water into hydrogen and oxygen by electrolysis with a voltaic pile (first battery to provide continuous current).

- 1804 – French inventor and politician Francois Isaac de Rivaz designed and built the world's first internal combustion engine. It was powered by a mixture of hydrogen and oxygen because… gasoline hasn't been discovered yet!

He started with a stationary engine suitable to work a pump. Then in 1807 he created the world's first vehicle powered by such an internal combustion engine. It was 6 meters long and weighed almost a ton, but it was a marvel at the time.

- 1809 – Thomas Foster observed with a theodolite (precision optical apparatus) the drift of small free pilot balloons filled with "inflammable gas."

- 1809 – Gay-Lussac's law (gas law that relates temperature and pressure).

- 1811 – Amedeo Avogadro formulated Avogadro’s law (a gas law that relates the volume of a gas to the amount of substance of gas present).

- 1819 – Edward Daniel Clarke invented the hydrogen gas blowpipe (missile).

- 1820 – W. Cecil wrote a letter “On the application of hydrogen gas to produce a moving power in machinery.

- 1823 – Goldsworthy Gurney devised an HHO blowpipe and demonstrated Limelight (intense illumination created when an HHO flame is directed at a cylinder of lime – calcium oxide).

- 1823 – German chemist Johann Wolfgang Döbereiner invented the Döbereiner’s Lamp – a lighter that produces hydrogen.

- 1824 – Michael Faraday invented the rubber balloon.

- 1826 – Thomas Drummond built the Drummond Light.

- 1826 – Samuel Brown tested his internal combustion engine by using it to propel a vehicle up Shooter’s Hill (south east London).

- 1834 – Michael Faraday published Faraday’s laws of electrolysis:

  1) *The mass of a substance altered at an electrode during electrolysis is directly proportional to the quantity of electricity transferred at that electrode.*

  2) *For a given quantity of DC electricity (electric charge), the mass of an elemental material altered at an electrode is directly proportional to the element’s equivalent weight.*

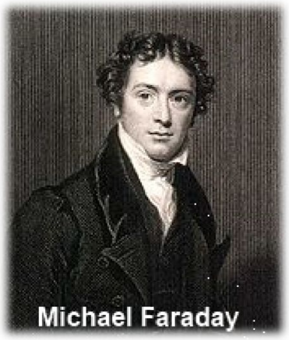

- 1834 – “Father of the Fuel Cell” Sir William Grove invented the ‘Grove Cell.’

- 1834 – Benoît Paul Émile Clapeyron — Ideal gas law.

- 1836 – John Frederic Daniell invented a primary cell in which hydrogen was eliminated in the generation of the electricity.

- 1838 – Swiss chemist Christian Friedrich Schönbein discovered the fuel cell effect, combining hydrogen and oxygen gases to produce water and an electric current. In 1839 he published the principle in the “Philosophical Magazine.”

- 1839 – Welsh judge and physical scientist, Sir William Robert Grove, developed what was actually the world’s first electric cell, the Grove cell, which was based on Schönbein’s principle. In 1839 he announced that development to the Académie des Sciences in Paris.

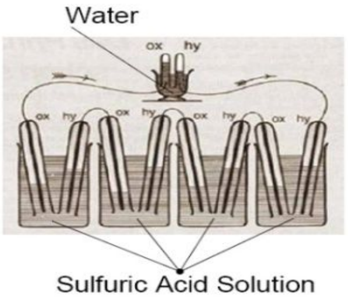

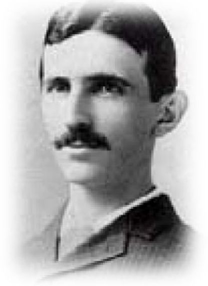

- 1849 – Eugene Bourdon invented the "Bourdon gauge" which enabled accurate gas pressure/vacuum measurement.

- 1856-1943 – Nikola Tesla's life and legacy can and should fill up multiple books. Many of his inventions enable and support Waterfuel directly and indirectly (see Chapter 33). →→

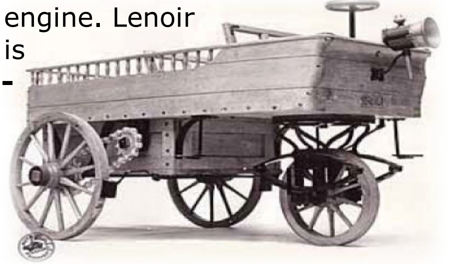

- 1863 – The Hippomobile was invented by Étienne Lenoir. It was an automobile which carried its own internal combustion engine. Based on Lenoir's 1860 invention – the Lenoir gas engine. Lenoir sold ~350-400 Hippomobiles. The interesting part is that in 1863, a Hippomobile with a **hydrogen gas-fuelled one cylinder 2-stroke internal combustion engine** made a test drive from Paris to Joinville-le-Pont, covering nine miles in about three hours (slow walking pace).

- 1863 - Jacques Arbos from Barcelona, Spain, granted US Patent № 40805 which is basically an internal combustion engine enhanced by early Waterfuel.

- 1866 – German chemist August Wilhelm von Hofmann invents the Hofmann voltameter, an apparatus for electrolyzing water that consists of three joined upright cylinders, usually glass.

- 1867 – German inventor Nikolaus August Otto invented and patented the gasoline engine we still use to this day (4 stroke, compression, etc.)

- 1873 – American Civil War aeronaut, scientist and inventor Thaddeus S. C. Lowe developed and patented the Lowe's ***water gas*** process: generating large amounts of hydrogen-enriched gas for residential and commercial use in heating and lighting. Unlike the common coal gas which was used in municipal service, this gas provided a more efficient heating fuel that was also suitable for illumination.

- 1873 – James Maxwell publishes his 'Treatise on Electricity and Magnetism' pointing out that the vacuum in fact contains a considerable amount of energy.

- 1874 — Jules Verne wrote in his fictional "The Mysterious Island:"

> *"Water!" cried Pencroft, "**water as fuel for steamers and engines! Water to heat water!**"*
>
> *"Yes, but water decomposed into its primitive elements," replied Cyrus Harding, "and decomposed doubtless, **by electricity**, which will then have become a powerful and manageable force, for all great discoveries, by some inexplicable laws, appear to agree and become complete at the same time."*

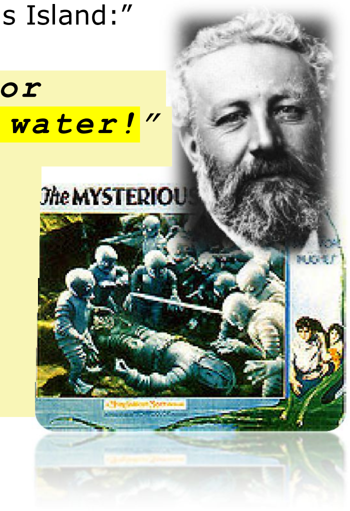

> ***"Yes, my friends, I believe that water will one day be employed as fuel, that hydrogen and oxygen which constitute it, used singly or together, will furnish an inexhaustible source of heat and light, of an intensity of which coal is not capable."***

- 1884 – Henry M. Paine's patents a process to "tweak" the HHO gas (then called "luminance gas" because it was used for lamps) produced by electrolysis so that it mimics the burn of fossil fuel, allowing it to be used in fossil-fuel-fired appliances. In broad view of history, it sounds like an important breakthrough toward the popular applications of Waterfuel today.

- 1884 – Charles Renard and Arthur Constantin Krebs launch the airship La France. It was electric-powered and filled with hydrogen.

- 1885 – Polish physicist Zygmunt Florenty Wróblewski published hydrogen's critical temperature as 33ºK, critical pressure as 13.3 atmospheres and boiling point as 23ºK.

- 1888 – Swedish physicist Johannes Robert Rydberg (1854-1919) devised the Rydberg Formula to calculate sub-atomic behavior of Hydrogen; to read more on the science search Google for his name or "Rydberg Formula". This is used by Chris Eckman in Chapter 6 to explain Waterfuel's unique science.

- 1889 – Ludwig Mond and Carl Langer coined the name "fuel cell" and tried to build a device running air and "Mond gas" (industrial coal gas).

- 1893 – Friedrich Wilhelm Ostwald experimentally determined the interconnected roles of the various components of the fuel cell.

- 1895 – Scientific papers started using the word Hydrolysis (from Greek hydro-, meaning 'water' and -lysis, meaning 'separation').

- 1896 – Jackson D.D. and Ellms J.W. produced hydrogen by microalgae (Anabaena – exists in plankton).

- 1896 – French meteorologist and aerology pioneer Leon Teisserenc de Bort carried out experiments with high flying instrumental weather balloons that were filled with hydrogen.

- 1897 – French chemist Paul Sabatier facilitated the use of hydrogenation with the discovery of the Sabatier reaction: reaction of hydrogen with carbon dioxide to produce methane and water.

- 1898 – Hydrogen was first **liquefied** by James Dewar using his Dewar flask invention (regenerative cooling). In 1899 he produced **solid hydrogen**.

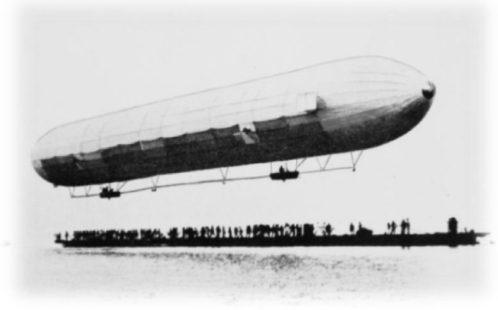

- 1900 – German general and later aircraft manufacturer with the long name Count Ferdinand Adolf Heinrich August Graf von Zeppelin (or Graf Zeppelin for short) launched the first RIGID hydrogen-filled airship, the Zeppelin LZ1. →

- 1901 – German chemist Wilhelm Normann introduced the hydrogenation of fats.

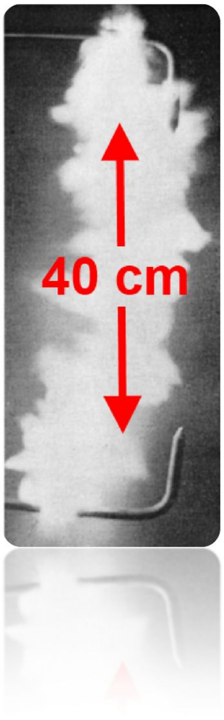

- 1903 – Russian rocket scientist Konstantin Eduardovich Tsiolkovskii published “The Exploration of Cosmic Space by Means of Reaction Devices.”

- 1907 – British engineer Howard Lane invented the Lane hydrogen producer, an apparatus for hydrogen production.

- 1907 – Trowbridge of Harvard University produced the first photograph of a cold fog explosion. →→

- 1909 – Linde-Frank-Caro process: a method for hydrogen production by removing hydrogen and carbon dioxide from water gas by condensation. The process was invented by Adolf Frank and developed with Carl von Linde and Heinrich Caro.

- 1909 – Zeppelin LZ6 was used for the first commercial passenger transport. The world’s first airline, the newly founded DELAG, bought seven Zeppelins by 1914.

- 1910 – Fritz Haber patented the Haber process – an important progress in ammonia production that created ammonia using hydrogen gas.

- 1912 – Hugo F. Liedtke invented a major water injection method: alternating between internal combustion and steam injection into the combustion chamber. Liedtke was granted a US Patent in 1917.

- 1912 – Zeppelin LZ13 was used for the first scheduled **international** Zeppelin passenger flights.

- 1912 – American chemist/physicist Irving Langmuir: using a heated tungsten wire, hydrogen is dissociated into Atomic Hydrogen (not the bomb): H2 ←→ 2H

- 1916 – American Physics & Electrical Engineering Professor Howard Monroe Raymond publishes his work “***Oxy-Hydrogen Welding***” in American Technical Society, Modern Shop Practice, Vol.1

- 1916 – Ohio inventor Charles Frazer invented a hydrogen booster which ***used electrolysis to increase vehicle power and fuel efficiency while greatly reducing exhaust emissions***. US Patent № 1262034 (approved 1918), see the patents chapters.

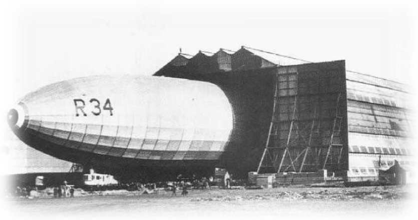

- 1919 – The first Atlantic crossing by airship with the gigantic 5-engine airship Beardmore H.M.A. R34 → (H.M.A. = His Majesty's Airship).

- 1920 – Hydrocracking, a plant for the commercial hydrogenation of brown coal was commissioned at Leuna, Germany.

- 1920's – German engineer Rudolf Erren invented the "Erren Engine" and converted the internal combustion engines of trucks, buses, and submarines to use hydrogen or hydrogen mixtures. Patented in Britain in 1930 (GB Patent № 364,180) and in 1936 in the USA (US Patent № 2,183,674).

- 1923 – In a talk given in Cambridge, British scientist and Marxist writer, J.B.S. Haldane, foreseeing the exhaustion of coal for power generation in Britain, proposed a network of hydrogen-generating windmills. This is the first proposal of the hydrogen-based renewable energy economy. In his 1924 essay "Daedalus; or, Science and the Future" Haldane wrote: ***"There will be great power stations where during windy weather the surplus power will be used for the electrolytic decomposition of water into oxygen and hydrogen."***

- 1923 – Steam reforming, the first synthetic methanol, was produced by BASF in Leuna, Germany.

- 1926 – Partial oxidation: VanDeVeer and Parr at the University of Illinois used oxygen in the place of air for the production of syngas.

- 1926 – English physical chemist, Sir Cyril Norman Hinshelwood, described the phenomenon of chain reaction.

- 1926 – Italian aeronautical engineer and Arctic explorer, Umberto Nobile, made the first flight over the North Pole with Norge, an Italian-made hydrogen airship.

- 1926 – Austrian physicists Wolfgang Pauli and Erwin Schrödinger show that the Rydberg formula for the spectrum of hydrogen follows from the new quantum mechanics.

- 1926 – Irving Langmuir invented the Hydrogen Blowtorch that produces 3700ºC, melts tungsten and vaporizes diamonds.

- 1927 – Swedish scientist J. Tandberg stated that he had fused hydrogen into helium in an electrolytic cell with palladium electrodes – the world's first "Cold Fusion!" However, his 1927 patent application was denied because he was unable to explain the physical process…

- 1929 – Paul Harteck and Karl Friedrich Bonhoeffer achieved the first synthesis of ***pure parahydrogen*** → (more data in the theory chapters above).

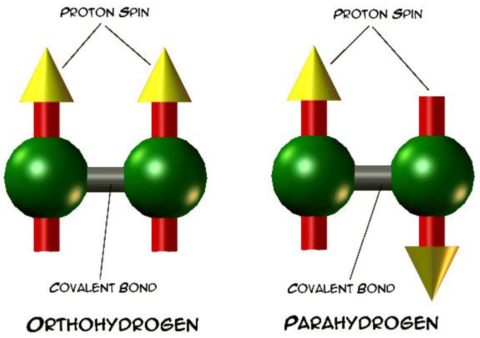

- 1931÷1932 – Austrian Inventor Viktor Schauberger extracts electricity, free energy and even 'gasoline' from water by "biomimicry" rather than orthodox science. See details in Chapter 31.

- 1933 – Norsk Hydro ASA, a Norwegian aluminum and renewable energy company founded in 1905, introduced a concept car with an on-board ammonia reformer that produced hydrogen-on-demand to propel the vehicle.

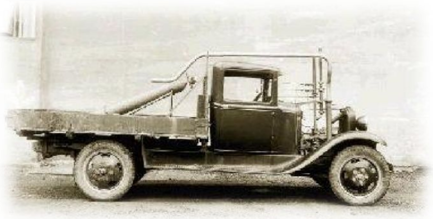

- 1935 – Eugene Wigner and H.B. Huntington predicted metallic hydrogen.

- 1935 – Charles H. Garrett demonstrated a Waterfueled car "for several minutes." The event was reported on September 8, 1935 in The Dallas Morning News. The car generated hydrogen by electrolysis as can be seen by examining Garrett's US Patent № 2,006,676 issued that same year. His Patent includes drawings that show a carburetor similar to an ordinary float-type carburetor but with electrolysis plates in the lower portion, where the float is used to maintain the level of water. As you can imagine, that water car never made it to mass production…

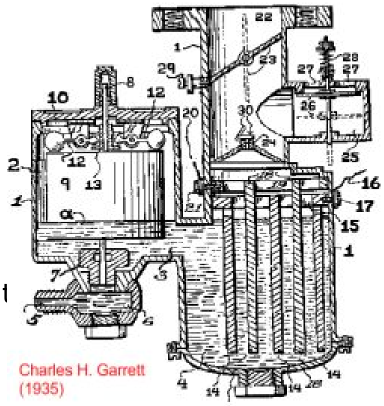

Charles H. Garrett
(1935)

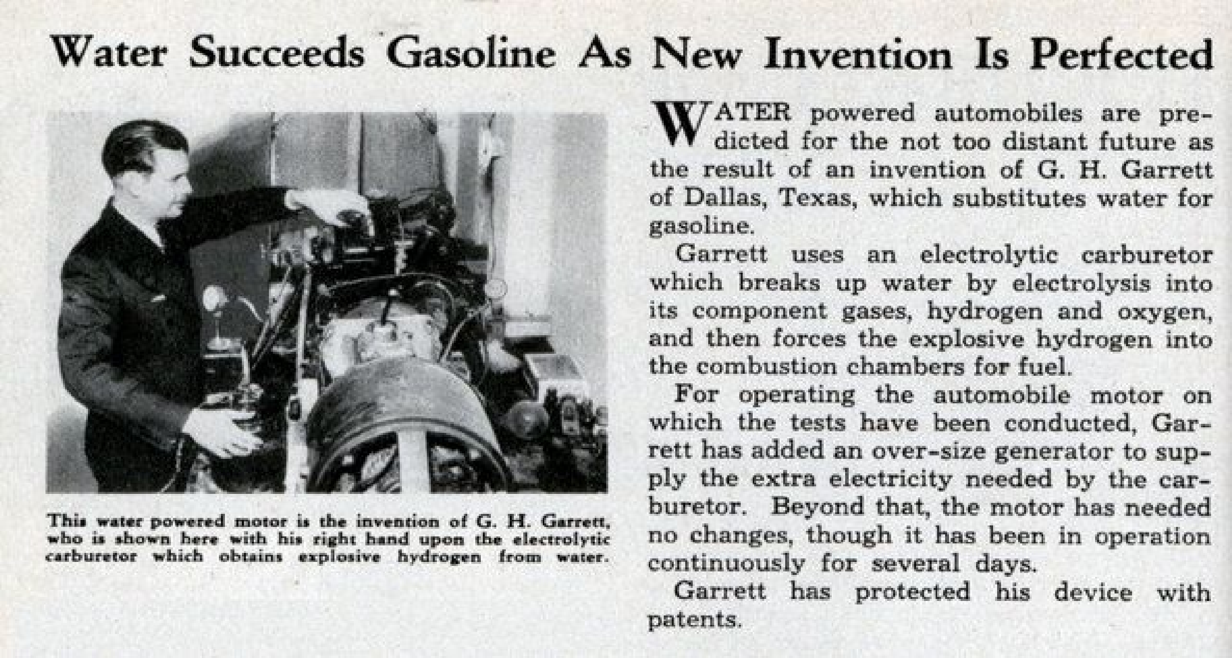

Water Succeeds Gasoline As New Invention Is Perfected

This water powered motor is the invention of G. H. Garrett, who is shown here with his right hand upon the electrolytic carburetor which obtains explosive hydrogen from water.

WATER powered automobiles are predicted for the not too distant future as the result of an invention of G. H. Garrett of Dallas, Texas, which substitutes water for gasoline.

Garrett uses an electrolytic carburetor which breaks up water by electrolysis into its component gases, hydrogen and oxygen, and then forces the explosive hydrogen into the combustion chambers for fuel.

For operating the automobile motor on which the tests have been conducted, Garrett has added an over-size generator to supply the extra electricity needed by the carburetor. Beyond that, the motor has needed no changes, though it has been in operation continuously for several days.

Garrett has protected his device with patents.

- 1937 – The Heinkel HeS-1 experimental gaseous hydrogen-fueled centrifugal jet engine was tested at Heinkel-Hirth Motorenbau, Germany. It was the world's first working jet engine.

- 1937 – First hydrogen-cooled turbogenerator went into service at Dayton, Ohio.

- 1937 – After 10 successful trans-Atlantic flights between Germany and USA, the Hindenburg airship crashed and burned upon landing in Lakewood, New Jersey. A study in 1997 concluded that **IT WAS NOT DUE TO THE HYDROGEN GAS.** A weather-related spark **ignited the airship's silver-colored canvas exterior covering** which had been treated with the key ingredients of solid rocket fuel…

  Now you know: **it wasn't a hydrogen disaster!** *And if we take it a step further one may ask: What's rocket fuel doing there??? Were the engineers that stupid? Or did someone plan this to give hydrogen a VERY bad name? Because I still see it pushed by mainstream newspapers as a hydrogen accident. Look, I have no proof whatsoever, but remember old folks' wisdom about accidents don't just happen…*

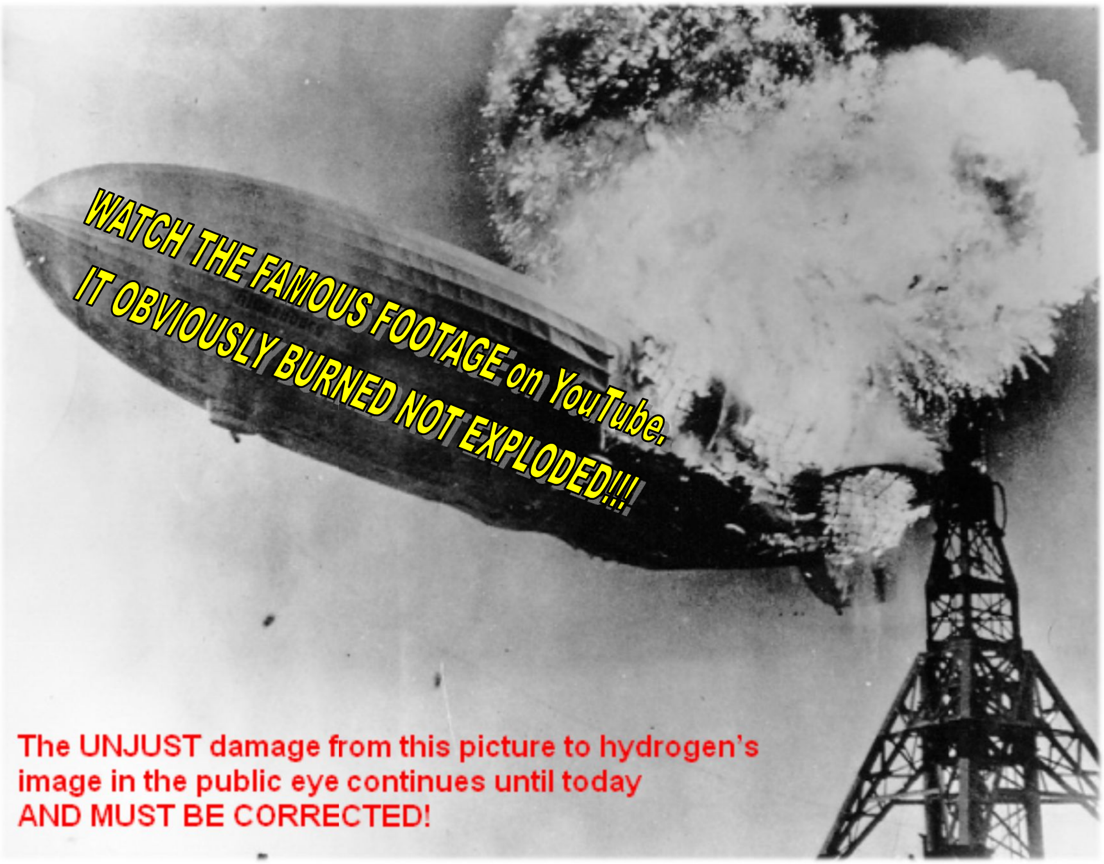

- 1938 – First 150 miles (240 km) pipeline for compressed hydrogen constructed in the Rhine-Ruhr metropolitan region, Germany. I think it still operates today.

- 1938 – Russian-American aviation pioneer Igor Sikorsky proposed liquid hydrogen as a fuel.

- 1939 – German researcher Hans Gaffron, while working at the University of Chicago, observed that the green algae he was studying would sometimes switch from producing oxygen to producing hydrogen. →→

  In 1997 Professor Anastasios Melis from the University of California at Berkeley discovered why: when such algae is deprived of sulfur it stops oxygen production (normal photosynthesis) and starts making hydrogen.

- 1941 – Leningrad (today's Saint Petersburg) was under German siege and starved for fuel. Russian lieutenant Boris Shelishch converted ***hundreds*** of GAZ-AA (a 3-seat trucks that served in the city's defense) to run on hydrogen. This was the first mass application of hydrogen in internal combustion engines.

- Popular Science Magazine of **June 1940** and **June 1944** – Raymond Wailes and Alden Armagnac (respectively) taught in great detail how to make hydrogen from very-low-cost household materials.
- 1943 – Liquid hydrogen is tested as rocket fuel at Ohio State University.
- 1943 – Swedish (navy) researcher Arne Zetterström first described the use of hydrogen as a breathing gas. His "hydrox" gas was made from 96% hydrogen and 4% oxygen.
- 1948 – German engineer Dr. Frank Frungel measured the unusual strength of water arc explosions. He concluded that the explosions were not caused by heat and steam, and admitted freely that he was unable to explain the phenomenon.
- 1949 – Hydrodesulfurization, a process of catalytic reforming, was commercialized under the name Platforming process.
- 1952 – Russian scientists Nikolay Basov and Alexander Prokhorov from Lebedev Institute of Physics (USSR) described the use of the intrinsic properties of the hydrogen atom to produce a precision frequency.
- 1952 – Non-Refrigerated transport Dewar: liquid hydrogen storage in space.
- 1955 – W. Thomas Grubb modified the fuel cell design by using a sulphonated polystyrene ion-exchange membrane as the electrolyte.
- 1957 – Pratt & Whitney's model 304 jet engine using liquid hydrogen as fuel was tested for the first time as part of the Lockheed CL-400 Suntan project. →

- 1950's~1957 – Cambridge Corporation built single-axis, then double-axis semi-trailers for hauling liquid hydrogen.

- 1958 – Leonard Niedrach devised a way of depositing platinum onto the fuel cell membrane devised by W. Thomas Grubb in 1955, resulting in what has become known as the Grubb-Niedrach fuel cell.

- 1958 – US machine manufacturer Allis-Chalmers demonstrated the D 12, the first 15 kW fuel cell tractor.

- 1958 – The United States formed NASA which is currently the biggest consumer of liquid hydrogen, for rocket propulsion and for fuel cells.

- 1959 – Francis Thomas Bacon of Cambridge University in England built what he called "Bacon Cell" – the first practical 5 kW hydrogen-air fuel cell to power a welding machine. Later that year, Harry Karl Ihrig, an engineer for Allis—Chalmers demonstrated the first fuel cell vehicle: a 20–horsepower tractor.

- 1960 – Allis-Chalmers built the first fuel-cell-powered forklift.

- 1961 – First flight of the RL10 hydrogen rocket engine made by Pratt & Whitney Rocketdyne. RL10 burns cryogenic liquid hydrogen and liquid oxygen propellants. It was first tested on the ground in 1959.

- 1964 – Allis-Chalmers built a 750-watt fuel cell to power a one-man underwater research vessel.

- 1965 – High school senior Roger Billings converted his father's Ford model T car to run on hydrogen, for which he won the Gold & Silver Award in 1966. Later he developed a hydrogen system for ordinary cars WITHOUT heavy hydrogen tanks; he used hydrides (certain metal alloys) to store large amounts of hydrogen. When hot exhaust gases passed through the hydride container(s) they released hydrogen (the car ran on either hydrogen or gasoline, with a dashboard switch to select either one).

- 1965 – The first commercial use of a fuel cell in Project Gemini, NASA's second human spaceflight program.

- 1965 – Allis-Chalmers builds the first fuel–cell-powered golf carts.

- 1966 – Slush hydrogen, a combination of liquid hydrogen and solid hydrogen was created for use as a lighter weight rocket fuel.

- 1966 – Flight of rocket engine J-2 powered by liquid hydrogen.

- 1966 – William A. Rhodes was the first to obtain a Patent on using a common delivery outlet for both hydrogen and oxygen from an electrolyzer. In other words, the first Patent for Brown's Gas (also rightfully named Rhodes's Gas).

- 1967 – Akira Fujishima discovers the Honda-Fujishima effect for producing hydrogen in a photoelectrochemical (solar) cell. The process is basically electrolysis powered by the sun.

- Circa 1967-1970 – Prof. Yull Brown (see photo →) researched "Brown's Gas" and also developed, patented, demonstrated and taught advanced Waterfuel technology for powering cars, welding, treating hazardous waste.

1968→2010 – Filipino inventor Daniel D. Dingle developed and produced practical tap-water cars (reportedly built 100 engines). Video interviews showing Dingle's Toyota Corolla '95 with an on-board hydrogen Waterfuel generator, flared the enthusiasm of many experimenters.

A good friend of mine visited Dingle's home in Manila, drove his car and said it worked well; Dingle told my friend that he has been allowed to keep his car but forbidden to teach the world how to replicate it. From several sources that I have evaluated, seems like his system did not produce HHO but a special gas that had 40% hydrogen.

After his death in 2010, his water car(s) and works "disappeared" from his guarded estate. http://fuel-efficient-vehicles.org/energy-news/?page_id=928

According to Patent App. 20100288212, Dingle's invention was published in *Manila Times* in 1968, 1974, 1984, 1994 – so it must be well known in Manila…

- 1969 – American engineer and computer scientist, UCLA Professor Leonard Kleinrock sends the first message over the ARPANET – the early form of Internet. Significance to Waterfuel? The eventual advent of the Internet (and all computer-aided exchange of information) in recent years enabled fast exchange between scientists and experimenters – amounting to an unstoppable forward motion.

- Late 1960's – Spanish inventor Edward Estevel developed a classic "water to auto engine" system that extracted hydrogen from water. At first his system was highly heralded, but then sank to oblivion amid rumors of foul play.

- 1970 – Nickel hydrogen battery (NiH_2 or $Ni–H_2$) was developed. It's rechargeable and differs from a nickel–metal hydride (NIMH) battery by the use of hydrogen in gaseous form, stored in a pressurized cell.

- 1970's – Henry (Andrija) Puharich reportedly drove his mobile home for hundreds of thousands of miles across North America, using only water as fuel. One story goes that in a high mountain pass in Mexico, he ran out of water and collected snow for his engine… Puharich was not only well connected in high places but also a productive inventor who was granted many US Patents on the subject (Chapter 20) and who published his theory freely (Chapter 8).

- 1972 – Bolivian inventor Francisco Pacheco granted a US Patent for gas-operated internal combustion engine. Hydrogen generator on board a vehicle uses a magnesium electrode immersed in a salt-water electrolyte, to produce hydrogen on-demand.

- 1972 – A 1972 Gremlin (a 2-seater made by American Motors Corporation) that has been modified by the University of California at Los Angeles, entered the 1972 Urban Vehicle Design Competition and won first prize for the lowest tailpipe emissions. Students converted the Gremlin's V-8 internal combustion engine to run on hydrogen supplied from an onboard tank.

- 1973 – The 30 km hydrogen pipeline in Isbergues, France.

- 1973 – OPEC oil embargo and the fabricated shortage of fossil fuel encouraged the development of hydrogen fuel cells for conventional commercial applications, as well as many other fuel-saving inventions.

- 1974 – International Energy Agency (IEA) was established in response to global oil market disruptions. IEA activities included the research and development of hydrogen energy technologies.

- 1974 – National Science Foundation transfers the Federal Hydrogen R&D Program to the U.S. Department of Energy. Professor T. Nejat Veziroglu of the University of Miami, FL, organized The Hydrogen Economy Miami Energy Conference (THEME), the first international conference held to discuss hydrogen energy. Following the conference, the scientists and engineers who attended the THEME conference formed the International Association for Hydrogen Energy (IAHE).

- 1974 – John Andrews, a Portuguese chemist, demonstrated a water-to-gas additive before Navy officials which allowed ordinary water to be added to gasoline without decreasing the combustibility of the gas and would drive the cost of gasoline down to 2 cents per gallon. When Navy officials finally went to his lab to negotiate for the formula, they found Andrews missing and his lab ransacked. [Source: Gary Vesperman]

- 1975→Today – Back in 1975, American inventor Paul Pantone met an unusual person (an Eastern sage – I'm throwing a wild guess) who eventually entrusted him with the basic plans for GEET (Global Environmental Energy Technology; in Hindu 'Geet' means *melody* or *singing*). Pantone was commanded to always give a portion of whatever he made from GEET back to mankind. He then created the first working GEET engine in 1983. His invention mixes some liquid fuel (gasoline, Diesel, kerosene, used engine oil, or even crude oil) with as much as 80% water of some sort: saltwater, tap water, cola, coffee, beer, urine, etc.

  In 1984, a local newspaper wrote a story about it – and the very next day he was warned that someone was about to erase his IRS records to try and frame him for tax evasion. From that day started a long story of framing, legal atrocities and suppression that ended on May 12, 2009 when he was finally released from the Utah State (Mental) Hospital thanks to relentless pressure from Paul's GEET friends worldwide. Pantone was incarcerated for three and a half years under the infamous abuse of psychiatric "hospitals" (torture asylums, actually).

Image source: YouTube.com

Due to endless efforts of his friends from around the world, this trail of suppression did not stop the invention, or Pantone, who continued to teach until his departure in 2015. Additionally, his GEET became very popular with worldwide users, for instance French farmers and drivers using independent developments of the technology. The website www.geetinternational.com states that based on the hundreds of thousands of emails they've been receiving, they estimate "there are probably about 5000 vehicles world-wide running on GEET right now. Including cars, tractors, other farm equipment, and even a helicopter." For the sake of realistic expectations, let me say, it seems that getting GEET to work requires tedious study and hard work – not everybody who tried got it to work. That's why Pantone's students now teach classes and trains dealers, and I guess this story has just began. More in Chapter 30.

- 1976 – Californian inventor Sam Leslie Leach submitted his revolutionary hydrogen extraction process to scientific testing by TWO independent Los Angeles labs. The labs returned results that were described as "perfect." The production rights were bought by Morris Mirkin (founder of Budget car rental) and then the inventor was said to fear for his life.

- January 16, 1977 – The Sunday Telegraph (about Yull Brown): "A Sydney inventor has refused a giant American oil company's offer to buy out his method of turning tap water into fuel."

- 1976, 1978 – Australian inventor Stephen Horvath was granted Patents for efficient generation of Hydrogen and Oxygen.

- 1978 – Actor Jack Nicholson announced on CBC show 'Marketplace' that he was running his Chevy car on hydrogen generated from water and solar energy.

- 1978 – New Zealand inventor Archie Blue demonstrated in public an under-the-hood Waterfuel device. Same year he was granted US Patent # 4,124,463. Blue is featured in the book 'Suppressed Inventions & Other Discoveries' by Jonathan Eisen (available cheaply from www.amazon.com/Suppressed-Inventions-Other-Discoveries-Jonathan/dp/0895298090). He was brave to refuse a $500 million bribery to sell out, but nevertheless he has been unable to bring his invention to the marketplace. After his death (at old age) his family discarded all his belongings as "garbage."

- 1979 – HM7B rocket engine, a gas generator rocket engine fed with liquid oxygen and liquid hydrogen, powered the third stage of the French-made Ariane 1 rocket.

- 1980 – American inventor Robert Norman Boyce built an Electrolyzer with a series-cell design. Boyce does not believe in Patents and wants his technology given freely to Mankind. Download his free plans – kindly documented and illustrated by Patrick Kelly: www.hho4free.com/documents/BB101.pdf or www.free-energy-info.co.uk

- 1981 – First flight of the Space Shuttle, propelled by its 6.5 million pound thrust hydrogen-oxygen engine.

- 1983 – Carl Cella from the heavy metal band "Rampage" built a Waterfuel car by mounting a hydrogen generator in the trunk of his 1979 Cadillac Coupe de Ville. He then released detailed plans through alternative press because a Los Angeles TV news channel refused to report that an 18-year old "metalhead" was smart enough to construct such a car on his own. Died (murdered?) in prison.

- 1983 – Herman P. Anderson used a combination of methods to turn water into powerful fuel for internal combustion engines: 22-amp DC electrolysis, a 70,000-volt corona discharge, de–ionized water, deuterium (produced in the process) and micron–sized water vapor.

- 1984 – American inventor Stanley Allen Meyer ran a dune buggy → on water instead of petrol. He replaced the spark plugs with special injectors to spray a fine mist of water into the engine cylinders, and that mist was subjected to an electrical resonance.

- 1984 – George Wiseman starts Eagle Research to research and promote the use of Brown's Gas.

- 1985 – Inventor, natural scientist and winner of prestigious awards, Austrian engineer Wilhelm Mohorn, founded the Aquapol company in Austria (they now have branches in other countries and continents). His invention is a breakthrough in the field of wall dehydrations (it dries dump walls without touching or heating them) thus saving valuable buildings such as palaces, museums and schools (to understand its working principle explained watch https://youtu.be/PG1rWBqTWw0 and read http://www.aquapol.co.uk/content/aquapol-working-principle). Since then they installed over 30,000 systems and impressed the world with this eco-friendly tech which is based on zero-point energy (energy from the vacuum). As I see it, other than saving so many magnificent structures, the importance of the success of Aquapol's installations is that it opened the doors and the ears to consider Wilhelm Mohorn's theory on how zero-point energy really works, and how it relates to water.

- 1987 – South African inventor Francois Cornish patented a method to make hydrogen fuel for a vehicle on-demand with an arc design using underwater aluminum wire.

- 1988 – Tupolev Design Bureau successfully converted a 164-passenger TU-154 commercial jet to operate one of the jet's three engines on liquid hydrogen. The maiden flight lasted 21 minutes.

- 1989 – "Cold fusion" first announced when Stanley Pons and Martin Fleischmann from the University of Utah reported producing nuclear fusion in a tabletop experiment involving electrolysis of heavy water on a palladium electrode.

- 1989—2010, the National Hydrogen Association (NHA) was a nonprofit organization focused on advancing the development of hydrogen technologies and their utilization in industrial, commercial, and consumer applications and promote the role of hydrogen in the energy field. The NHA was a member-based organization and hosted the annual Hydrogen Conference. NHA also provided advocacy on behalf of the stakeholders in the hydrogen economy and worked to support legislation enabling the entry of hydrogen technologies to the marketplace. In October 2010, the NHA merged with the U.S. Fuel Cell Council (USFCC) to form the 'Fuel Cell and Hydrogen Energy Association.'

- 1990 – The U.S. Congress passed the Spark M. Matsunaga Hydrogen, Research, Development and Demonstration Act (PL 101-566), which prescribed the formulation of a 5-year management and implementation plan for hydrogen research and development in the United States. The Hydrogen Technical Advisory Panel (HTAP) was mandated by the Matsunaga Act to ensure consultation on and coordination of hydrogen research. Work on a methanol-fueled 10-kilowatt (kW) Proton Exchange Membrane (PEM) fuel cell began through a partnership including GM, Los Alamos National Laboratory, the Dow Chemical Company, and Canadian fuel cell developer, Ballard Power Systems.

- 1990/92 – Australian inventor "Joe" or "Joe-X" created the famous 'Joe Cell' said to be able to provide (after certain installation and conditioning procedures) all the power that an engine needs. ***The invention, or at least some of its explanation, is based in part on the energy discoveries of Wilhelm Reich in the 1940's.***
  Since it was hard to understand and replicate this invention, in 1999 ***Alex Schiffer* published a detailed guide and videos for Joe Cell experimenters**. Its history and further commercial development by Moshe Daniel Block: www.moe-joe-working.com (find others on eBay).

  Alex Schiffer: https://www.youtube.com/watch?v=IXWnLsx0d4Q

  The story of Joe cell: https://www.youtube.com/watch?v=mAbuHe9X_cs

- 1990 – The world's first solar-powered hydrogen production plant at Solar-Wasserstoff-Bayern, Germany.

- 1991 – According to RexResearch.com, UK tech magazines Electronics World and Wireless World ran a story about Stanley Meyer's highly successful demonstration before Professor Michael Laughton, Dean of Engineering at Mary College, London, Admiral Sir Anthony Griffin, a former controller of the British Navy, and Dr. Keith Hindley, a UK research chemist. In that demo the system *"...produced far more hydrogen/oxygen mixture than could have been expected by simple electrolysis."*

- 1992 – Francisco Pacheco from Bolivia was granted US Patent № 5,089,107 for his "Bi-Polar Auto Electrolytic Hydrogen Generator" that produced hydrogen on-demand from seawater. Magnesium and aluminum are used as sacrificial (consumed) electrodes thus ***hydrogen is produced without the need for an external power supply***.

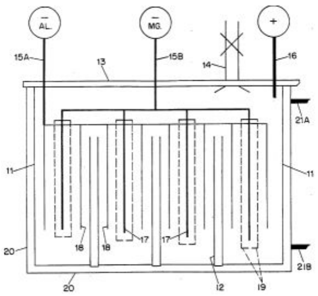

- August 8, 1994 – Business Week (page 47 in that issue) runs an article titled "Engines That Run on Water" and tells the story of the 66 year old Rudolph W. Gunnerman and his 7-year R&D into Waterfuel. This inventor from Sacramento, California, received a US Patent for his invention to run an internal combustion engine on a mix of as much as 70% water and 30% liquid fuel.

- 1994 – German automaker Daimler Benz demonstrated its first NECAR (New Electric CAR), which was the first vehicle powered by a fuel cell and based on the Mercedes-Benz 100 van, at a press conference in Ulm, Germany.

- 1994 – TV film "The Water Engine" based on a David Mamet play, tells the story of Charles Lang inventing an engine that runs on water for fuel. The plot highlights the many obstacles the inventor must overcome to patent his device.

- 1996 – ***Pro***-waterfuel action film "Chain Reaction" in which a machinist accidentally discovers ***sounds that cause water to resonate and turn water into HHO*** – and the violent attempts to stop him. Beautifully played by Keanu Reeves, Morgan Freeman, Rachel Weisz, Fred Ward, Kevin Dunn and Brian Cox. I warmly recommend that you BUY a copy (usually $2.00-$3.50) from Amazon and watch it seven times. Or eight. www.amazon.com/Chain-Reaction-Keanu-Reeves/dp/B00005A3KT

- 1996 – Vulcain rocket engine propelled the French-made Ariane 5 rocket into space, using liquid hydrogen cryogenic fuel (stored at extremely low temperatures).

- 1997 – Continuing the line of research started in 1939 by Hans Gaffron, Professor Anastasios Melis discovered that the deprivation of sulfur causes algae to switch from producing oxygen to producing hydrogen.

- 1997 – Further investigation regarding the Hindenburg accident (you know this photo) →

retired NASA engineer Addison Bain challenged the common belief that hydrogen caused the Hindenburg accident. Bain demonstrated that the ***hydrogen did not cause the catastrophic fire*** but rather the combination of static electricity and highly flammable material on the skin of the airship.

- 1997 – German car automaker *Daimler-Benz* and Canadian firm *Ballard Power Systems* announced a $300-million research collaboration on hydrogen fuel cells for transportation.

- 1998 – German Navy's non-nuclear submarine 'Type 212' was powered by hydrogen fuel cells.

- 1998 – Iceland unveiled a plan to create the world's first hydrogen economy by 2030 with Daimler-Benz and Ballard Power Systems. In 1999, a consortium of Icelandic institutions, headed by the financial group New Business Venture Fund, partnered with Royal Dutch/Shell Group, DaimlerChrysler (a merger of Daimler Benz and Chrysler), and Norsk Hydro to form the Icelandic Hydrogen and Fuel Cell Company, Ltd. To further the hydrogen economy in Iceland. Since Iceland is rich with large geothermal resources, the energy it produces from these sources is cheaper than fossil fuels, and I believe that this is why these plans have not materialized yet; they moved the target to 2050.

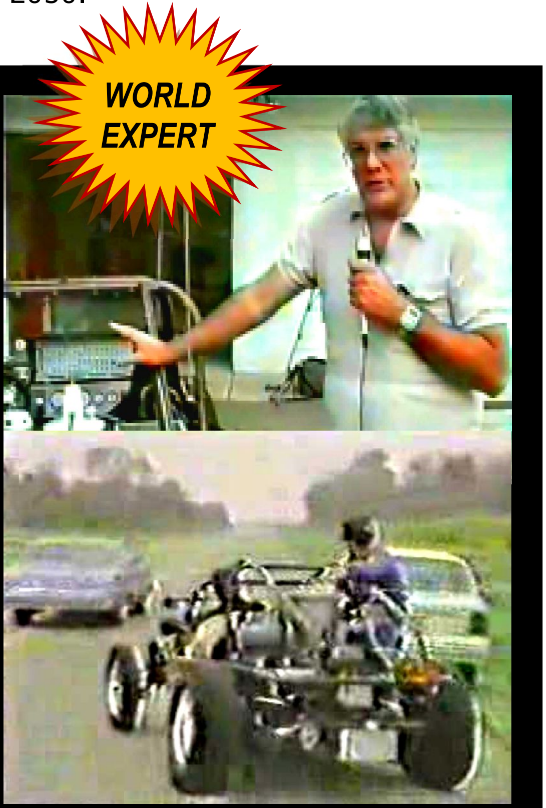

March 20, 1998 – American Waterfuel inventor Stanley A. Meyer died suddenly after dining at a restaurant. His twin brother Stephen reported that during a meeting in a restaurant with two Belgian "investors" (who vanished soon after), Meyer suddenly ran outside, saying: *"They poisoned me!"*

The coroner ruled that Meyer died from a blood problem… Meyer's supporters insist that he was assassinated in order to suppress his inventions. To this day that event still attracts strong attention and many Waterfuel enthusiasts ask me: "Was Stan Meyer really murdered?"

As if I know…

However, here's what I do know: even if we never find out what happened that day at the restaurant, the sad loss of Stanley Meyer splits the history of Waterfuel in half, and marks a very significant point in this timeline.

"The car that ran on water"

Read the complete story, written by *Dean Narciso* (thanks, Dean!) and published in *The Columbus Dispatch* in July 8, 2007. *"Meyer's death was laced with all sorts of stories of conspiracy, cloak-and-dagger stories,"* says an unnamed man at the end of the story. Link: http://www.dispatch.com/content/stories/local/2007/07/08/hydroman.ART_ART_07-08-07_A1_4V77MOK.html

The Columbus Dispatch

The car that ran on water

Nine years after his death, inventor's dreams -- and suspicions -- linger

By Dean Narciso

The Columbus Dispatch • Sunday July 8, 2007 8:56 AM

The car that ran on water -

After more than 20 years of research and tinkering, it was time to celebrate.

Stanley Meyer during a test of his dune buggy, about 1980. This screen shot was taken from a DVD sent to The Dispatch by his twin brother, Stephen Meyer.

Stanley Allen Meyer, his brother and two Belgian investors raised glasses in the Grove City Cracker Barrel on March 20, 1998.

Meyer said his invention could do what physicists say is impossible -- turn water into hydrogen fuel efficiently enough to drive his dune buggy cross-country on 20 gallons straight from the tap.

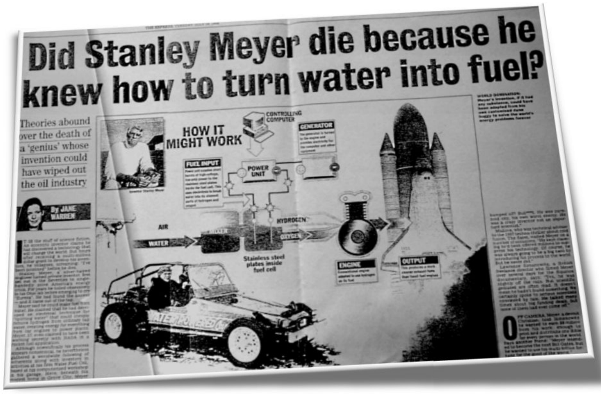

Did Stanley Meyer die because he knew how to turn water into fuel?

Theories abound over the death of a 'genius' whose invention could have wiped out the oil industry

By JANE WARREN

← This article by *Jane Warren* about the possible cause of Meyer's death was published in the Express (www.express.co.uk) of July 28, 1998. The nice thing here was a large diagram that greatly simplified the technology for the readers.

Unlike the watercars of Daniel Dingle, Archie Blue and others that were supposedly trashed, I believe Meyer's legendary water car may still exist, hidden in a secret garage (as is confirmed in Dean Narciso's story above).

Because in 2009, Michel Foisy (www.transformacomm.com) took this photo with what seems to be Meyer's original water-car in superb condition!

- 1990 – Juan Carlos Aguero from Córdoba, Argentina, applied for a European Patent for an invention incorporating as part of it ionized water being used rather than regular water in electrolysis.

- Late 1990's – Several inventors started marketing practical Waterfuel systems to the broad public. The Internet started spreading free information about water cars, but such websites tended to emerge and quickly vanish into thin air…

- 1999 – The Royal Dutch/Shell Company committed to a hydrogen future by forming a hydrogen division. Europe's first hydrogen fueling stations were opened in the German cities of Hamburg and Munich.

- Circa 2000→Today – Patrick J. Kelly authors and maintains 1000's of pages of alternative fuel and **Free-Energy** (see Glossary) documentation.

- 2000 – Professor Jan Peter Toennies, an American scientist and former director of the Max Planck Institute for Dynamics and Self-Organization, demonstrated the superfluidity of hydrogen at 0.15ºK.

- 2000 – Ballard Power Systems presented the world's first production-ready Polymer Electrolyte Membrane (PEM) fuel cell for automotive applications at the Detroit Auto Show.

- 2001 – **Anti**-waterfuel action film "Like Water for Octane" was the 4th episode of TV series "The Lone Gunmen." It promoted the idea that water cars would surely destroy the economy… Watching it may be thought-provoking for you, but the average viewer received a clear message: ***"Waterfuel is VERY bad for you!"*** www.youtube.com/results?search_query=%E2%80%9CLike+Water+for+Octane%E2%80%9D

- 2001 – ***Dennis J. Klein*** of Clearwater, Florida patented an Electrolyzer design and trademarked the term "Aquygen" to refer to the hydrogen-oxygen gas produced by the device.
  Originally developed as an alternative to oxyacetylene welding, Klein then reported he was able to run his vehicle exclusively on "Aquygen."
  Klein went into negotiations with the US army to install the technology in military Hummers and other applications.

- 2002 – German Navy's Diesel-electric submarine 'Type 214' powered by fuel cells.

- 2002 – Genesis World Energy (marketed via World Energy Management) of Boise, Idaho, USA, announced their 'Edison Device' as a market-ready device which would extract limitless energy from water. In 2003, the company announced 'The Genesis HICEF' product adapted to power automobiles. Some sources reported that the company collected over $2.5 million from investors, but none of their devices were ever brought to market.

- 2003 – Roy McAlister published the book "The Solar Hydrogen Civilization" carrying the subtitle "The Future of Energy is the Future of Our Global Economy." Even though he's not fond of HHO like I do, it's an excellent book to have and read. Available at www.KnowledgePublications.com

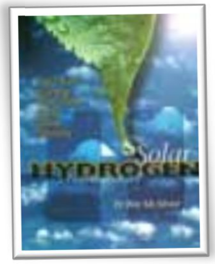

- 2003 – President George W. Bush announced in his 2003 State of the Union Address a $1.2 billion hydrogen fuel initiative to develop the technology for commercially viable hydrogen-powered fuel cells. I have yet to see a penny…

- 2004 – The DeepC project was launched. It is a hydrogen Autonomous Underwater Vehicle (AUV) power-assisted by an electric motor that gets its electricity from a fuel cell. The project was funded by the German Federal Ministry for Education and Research (project DeepC has since been terminated.)

- 2004 – U.S. Energy Secretary Spencer Abraham announced over $350-million devoted to hydrogen research and vehicle demonstration projects. This appropriation represented nearly one-third of Bush's $1.2 billion commitment to hydrogen/fuel-cell R&D.

- 2005 – U.S. Congress (according to the *League of Conservation Voters,* as reported by Gary Vesperman) gave the oil companies $2.6 billion in tax breaks as a reward for $190 million in campaign contributions.

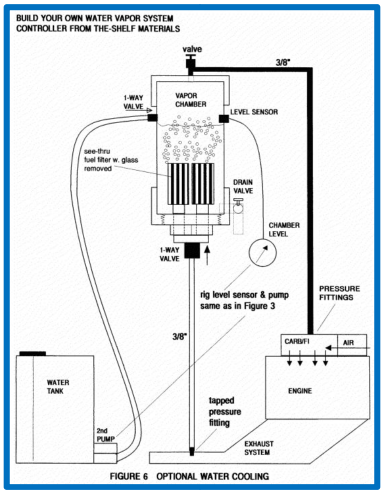

FIGURE 6 OPTIONAL WATER COOLING

- 2005 – Drunvalo Melchizedek from Spirit of Ma'at published detailed "water car plans" (see image) that he had received from an undisclosed source. If that source was the original inventor I do not know, but it was thanks to Mr. Drunvalo that my eyes opened to the wealth of information on water-cars and Waterfuel technology which subsequently inspired the creation of the **Water4Gas** experimenters club.

- 2005 – Twenty-three states in the USA had hydrogen initiatives in place.

- 2005 – New Zealand inventor Steve Ryan built and demonstrated on local TV news a motorcycle (modified carburetor) which runs on a water–based fuel. The water is converted into a fuel by an undisclosed process, not electrolysis. The resulting liquid is then used as if it was regular gasoline.

- 2005 – American mechanic identified as "s1r9a9m9" released the detailed plans of how he converted his car to run totally on water as fuel. Reportedly it was an 8-cylinder 1978 Chevrolet Camaro with a stock 350 (5.7 liter) engine.

- 2005 – James A. Robey (photo with H2O CAR license plate) created the ***Kentucky Waterfuel Museum*** in Lexington, Kentucky. Robey displayed historic Waterfuel Patents, scientific papers, various media items – and the most spectacular artifact was the 1971 Ford LTD converted to run on water by the late inventor Herman P. Anderson. His radio blog inspired many Waterfuel experimenters. I salute you, Robey!

- 2005 – Fran Giroux of Queensbury, New York (USA), participated in the Tour de Sol Rally mileage competition with his HHO-boosted Saturn and has achieved over 100 MPG as well as friendly newspaper headlines. Giroux is also the owner of hydrogen-boost.com and some of his customers were not far behind with 95.2 MPG (Rishi Giovanni Gatti), 81.22 MPG (Larry Trowbridge) and others who have more than doubled their mileage.

LOCAL | REGION

B

Officer injured in drug arrest

Competitive techno-wheelers

Fuel friendly cars face off in Tour de Sol

Pedicab owners push for OK

Mahovlich charged with drunken driving

- 2006 – online rumors told that Bill Williams, who had successfully built a truck that runs on water, was approached by two men who demanded that he stop his research, threatening him with dire consequences if he didn't. After a few days of contemplation Williams destroyed his plans, but *"others are keeping it alive."*

- 2006 – Ken Rasmussen and his research team, who have been working on a water-to-energy electrolysis process (somewhat similar to Professor Kanarev's) were threatened by "men in black" with big guns to stop working on the process.

- 2006 – James A. Robey published the world's first book on water cars and the suppression of Waterfuel. Available at: www.amazon.com/gp/product/B000FFM6D4

- 2006 – Bill and Tom Lang (photo shows them meeting Ozzie in the business district of Los Angeles) revolutionized the Waterfuel industry by developing a ***simplified*** DIY experimental hydrogen-oxygen generator.

- 2006 – Ozzie Freedom created the logo **Water4Gas**, and duplicated the Langs' technology in order to release it broadly to as many worldwide users as possible, as fast as possible. He founded the **Water4Gas** international experimenters club and has been delivering the technology as Public Domain to every member.

- 2006 – Bloom Energy (www.bloomenergy.com) of Sunnyvale, California (USA) launched the gigantic Bloom Box fuel cell. After a trial period of two years, in July 2008 the first commercial 100kW Bloom's Energy Servers® were shipped to a pretty big client…Google. They sold many more systems afterwards.

- 2007 – Boyce released his Electrolyzer plans for public's free use.

- 2007 – ***John Kanzius***, while searching a cure for cancer, stumbled upon a way to burn salt water with the same radio wave machine he was using to kill cancer cells. Died of pneumonia in 2009 before completing his life's work. This 9½-minute video www.byronwine.com/files/Saltwater-1.wmv is a collection of the many TV news articles about Kanzius and his good intentions; RIP. Maybe you, my reader, can be the one to complete his work based on Chapter 31?

- 2006→Today: Based on the experimenters club feedbacks and Ozzie's own home-based experimentation, **Water4Gas** DIY technology evolved and widened, allowing more gains for more vehicles, boats and trucks. The **Water4Gas** books, first published broadly in August 2007, accelerated a worldwide discussion about the validity of Waterfuel, leading to a proliferation of businesses established exclusively for further research, promotion and delivery of Waterfuel technology to the worldwide market.

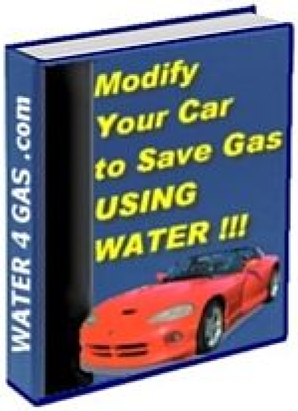

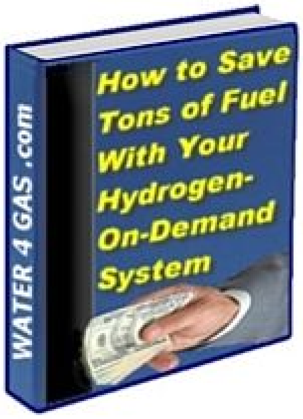

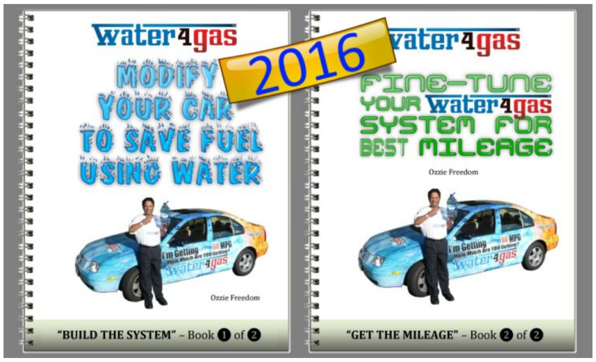

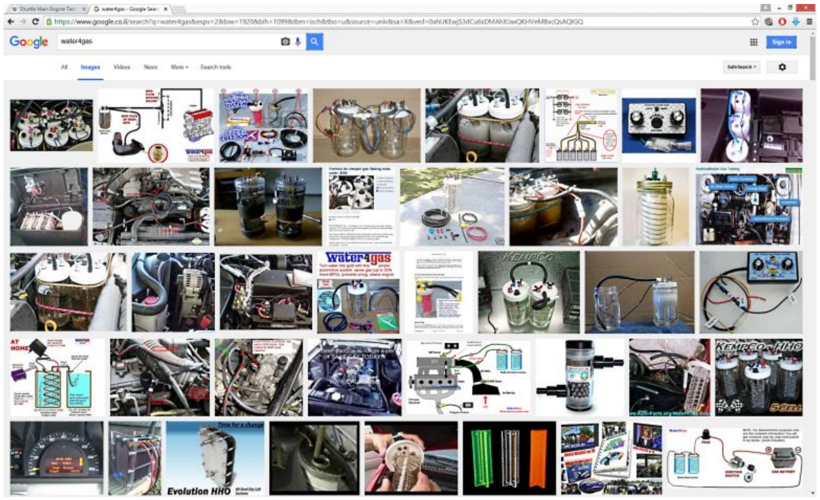

Google screenshot. When searching "water4gas" today you find 1000's of products manufactured by students, unsolicited success stories and much more.

- 2007→Today: Many attempts have and are being made to replicate Stanley Meyer's technology. In 2007 an American "inventor" that I won't name (because he sues Everybody and his Sister for violating his alleged copyrights) stirred up worldwide interest with a 34-second YouTube video of a supposed replication of Meyer's Waterfuel Cell.

Meyer shown with his Waterfuel cell at his lab →

Using a plastic pasta jar, steel tubes, tap water from his kitchen sink and 36 watts of power, he reportedly produced enormous amount of Brown's Gas the Stanley Meyer style. The video, and all reference to its author, have gone missing…

In 2008 Jean-Louis Naudin (a great man IMHO) started providing free Meyer replication data at http://jnaudin.free.fr/wfc/index.htm

In 2010 Kevin West (another good guy) entered the 'Pepsi Refresh' contest to try and win $250,000 for his project – a replication of Meyer's tech on the bench; for several years now his website www.waterforfuel.com carries this message: *"Sorry folks we have stopped selling fuel boosters, alternators, fuel chips, and magnets as we are gearing up to sell a 100% water power conversion kit."* He does sell good DVDs.

Also in 2010, Kentucky firm Square1 Energy Inc. announced a replication of "Meyer's Symmetrical Pulse Mode" concept with an electronic controller Hydro-Maxx™ to help HHO researchers get the most from their Waterfuel experimental units (company's website gone missing).

Around 2010÷2012 Frederick Wells has been reported to run his Dodge 4x4 pickup truck on water; he published videos and plans, naturally attracting worldwide attention; claimed to have sold 20,000 units but I haven't seen proof that even one complete system has been actually delivered.

Since 2011 these efforts have been supported by a newly discovered 37-minute video http://www.youtube.com/watch?v=Vd7QL1-NnlU that shows Meyer walking around his dune buggy showing and describing the different components that make his purported Waterfueled vehicle work; lectures he gave throughout his years of R&D are now also available.

Also in 2010, based on the fact that Meyer's patents have just become public domain, the H2earth Institute established an open source project for replicating his technology; their business website h2earth.org has gone missing, but their archive of Meyer's works is still available via http://www.youtube.com/h2earth and http://my.opera.com/H2earth/blog/cybrarium

In 2012 Andrew Michrowski (The Planetary Association for Clean Energy, Inc. and New Energy Congress) shared his experience of working with Meyer. Other noteworthy attempts to replicate the technology were made by Jean Louis Naudin, Dave Lawton (photo below) and Ravi Raju, to name a few. The complete story covered in this video http://www.youtube.com/watch?v=OXctY1K4wko

- 2008 – Genepax Co. Ltd. From Osaka, Japan, unveiled a car claimed to run on only water and air. News outlets dubbed the vehicle "Waterfuel car." An onboard 'Water Energy System' extracted hydrogen that was then used by a fuel cell to propel a small Indian-made ELECTRIC car REVAi (known as G-Wiz in the UK). The company planned on selling this car for about ¥2,000,000 ($18,522) but later in 2009 they shut down and quietly disappeared.

- 2008 – watercar inventor ***Daniel Dingle*** (mentioned earlier on this timeline) was sentenced, at age 82, to 20 years in jail, over investment fraud charges regarding his invention. To back up the prosecution, the Department of Science and Technology (Philippines) announced Dingle's invention a hoax (despite several validations over the past 30 years http://fuel-efficient-vehicles.org/energy-news/?page_id=928)

- 2008 – Hydrogen Power Abu Dhabi (HPAD) project to make Masdar City the world's first zero-carbon sustainable city.

- 2008 – Engineer *Thushara Priyamal Edirisinghe* was reported by Sri-Lankan and Pakistani press/TV to drive a Waterfueled car 300 kilometers on 3 liters of water. He showed the tech to *Prime Minister Ratnasiri Wickramanayaka,* who pledged to help.

- 2008 – Scott Roberts and Jeremy Wagener documentary film 'GasHole' that describes alternative fuels, dependency of on oil, etc. It states that Waterfuel has been *"buried and hidden, despite its ability of gas mileage improvement in cars and also reducing oil consumption."* In 2009 Ft. Lauderdale International Film Festival, the film won the *Spirit of the Independent Award*.

- 2008 – In Gary Vesperman's latest count, as many as 17 innocent people were brutally murdered just to ensure the global market supremacy of giant energy monopolies. At that time, he said, 31 energy inventors and associates were known to have been threatened with death, and 5 energy researchers and associates have been imprisoned or falsely charged. He suggested a Congressional bill to protect energy inventors and their creations, to hunt down and imprison for many years the secret government/corporate energy invention suppressors and their hired bullies and assassins.

- 2009 – With the soaring popularity of Waterfuel technology in the DIY and commercial sectors alike, the debate about the validity of Waterfuel heats up, fueled by the ignorance of those who negate it. To answer ignorance with knowledge, Ozzie Freedom decided to release new informational books such as this one, to educate the public about the solid scientific basis of Waterfuel technology. To support this, Ozzie updated the books and parts lists, and made them available for free download from www.Water4Gas.com – and there's also an interactive troubleshooter to help anyone (no registration required) to get maximal mileage.

- 2009-2014 – Gary Hendershot's live televised show *The Smart Scarecrow* http://smartscarecrow.com featured alternative energy related discussions, projects, people and products, including many about Waterfuel. Hendershot, who holds four PhD titles, inquired deeply into the technicalities of each and every subject, highlighting its pros and cons in a fair and intelligent manner. He interviewed me, Moray King and many others. Great work, Gary!

- 2009 – Fabian del Valle and K. Domen, in a Mexican/Japanese/Spanish publication show the impact of the thermal treatment in a closed atmosphere using specific photo-catalysts. With their technology, they reported, they saw high hydrogen production from WATER SPLITTING UNDER SUNLIGHT IRRADIATION. The process at large is called 'Artificial Photosynthesis'.

- 2011 – American physicist Moray B. King proposed a hypothesis that in water electrolysis the dominant energy is not coming from hydrogen, but rather it is coming from charged water gas clusters, which activate and coherently trap zero-point energy. Chapter 12 is dedicated to King's well-documented theory and lively lectures.

- 2011 - British scientists of Rutherford Appleton Laboratory announced the invention of hydrogen-based "artificial petrol" based on densely packing hydrogen into tiny beads that can be poured or pumped like a liquid. Professor Stephen Bennington, the project's lead scientist, said: *"In some senses, hydrogen is the perfect fuel. It has three times more energy than petrol per unit of weight, and when it burns, it produces nothing but water."* The Daily Mail reported: "Unlike existing 'green' fuels the new fuel under development will not require motorists to upgrade their vehicles." The company behind the project is Cellar Energy.

- 2011 – Vernon Roth presented a setup dubbed "element copy machine" due to its capability, in the process of electrolyzing water in certain cells, replicate elements (gold, silver, compounds) in the water; in other words the amount of such elements was shown to multiply by as much 10-13 times. Al Throckmorton and other experimenters validated this phenomenon, and Moray King described it in his widespread lectures.

- 2011-2013 – Frederick Wells demonstrated trucks and cars running allegedly only on water through an on-board electrolysis process similar to Meyer's.

- 2011-2014: The European Commission sponsored project SafeFlame, in which twelve European companies teamed up to develop technology for using oxy-hydrogen (Brown's Gas, HHO) flame for welding, cutting and brazing. http://cordis.europa.eu/project/rcn/100970_en.html

- 2012 – Italian scientist Francesco Celani publicly demonstrated a cold fusion cell that puts out about 280% more heat than it took to run it. Celani showed his cell producing excess heat for several days straight at both NI Week in Austin, Texas and at ICCF-17 in North Korea. Martin Fleischmann Memorial Project (www.QuantumHeat.org) is trying to build a kit to replicate Celani's cell for further experimentation by universities and other research institutes.

- 2012 – Dr. Cliff Ricketts from Middle Tennessee State University, USA and his assistants completed a 2,582-mile coast-to-coast drive that ended on March 8 in Long Beach, California, using only solar-generated hydrogen. Their original plan was to consume 10 gallons or less of ethanol fuel, but eventually they used only 2.15 gallons… This was widely covered by Fox News and other media channels.

- 2014 – American scientists Ilse Cleeves and Conel Alexander published a new study which reveals that a big portion of the Earth's water is older than the Sun.

- 2014 – The US Navy announced that it found a way (feasibility demonstrated at this point) to convert seawater to hydrogen so they don't have to refuel the ships; many of the airplanes still need jet fuel but that's a smaller problem.
- 2014 – Blacklight Power demo: www.youtube.com/watch?v=r1Fy8Iv5qMM
- 2014, 2015 – Virginia Tech researchers, a group of Chinese students (& others?) develop a fuel cell that generates electricity from water+sugar, water+bacteria.
- 2014, 2015 – Stanford scientists developed a cheap and efficient way to extract clean-burning hydrogen fuel from water 24/7 using 1.5 Volts and low-cost electrodes. Published in 'Nature Communications' of August 22, 2014 and June 23, 2015 by Bing-Joe Hwang, Bo Zhang, Dingchang Lin, Di-Yan Wang, Haotian Wang, Hyun-Wook Lee, Jiang Yang, Jigang Zhou, Meng-Chang Lin, Ming Gong, Mingyun Guan, Mon-Che Tsai, Po-Chun Hsu, Stephen J. Pennycook, Wu Zhou, Yayuan Liu, Yi Cui, Yong Deng, Yongfeng Hu, Zhiyi Lu, under the supervision of Professor Hongjie Dai. Haotian Wang said in an interview with Mark Shwartz from Precourt Institute for Energy: "Our water splitter is unique because we only use one catalyst, nickel-iron oxide, for both electrodes. This bi-functional catalyst can split water continuously for more than a week with a steady input of just 1.5 volts of electricity. That's an unprecedented water-splitting efficiency of 82% at room temperature." https://www.nature.com/articles/ncomms5695 and https://www.nature.com/articles/ncomms8261
- 2015 – China develops the world's first hydrogen-powered tram.
- 2015÷2017 – despite low oil prices, interest in alternative energy soars.
- 2015 (but first flight was way back in April 12, 1981) – The Aerojet Rocketdyne RS-25 by **Rocketdyne,** otherwise known as the Space Shuttle Main Engine (SSME), uses hydrogen and oxygen for liftoff. The fuel sources were liquid hydrogen and liquid oxygen mixed together by a sophisticated system; and this is neither the start nor the end of space travel story, yet it is basically Waterfuel on a giant scale! Over the years, 46 such engines (with upgrades) were built and used.

  In 2015 they ran at least six more tests to test the new control unit. The photo is from a 1981 test; pure hydrogen-oxygen flames emit UV light and with high oxygen mix → are nearly invisible to the naked eye. The bright area at the bottom of the picture is called "Mach disk" caused by nozzle supersonic speeds.

- 2015 – Professor Ozgur Sahin of Columbia University (USA) and his small team extract MECHANICAL ENERGY from the power of…evaporating water.

- 2015 – Chemistry professor Kyoung-Shin Choi (University of Wisconsin) and electronics Professor Giulia Galli (University of Chicago) increase water splitting efficiency by absorbing solar photons and improving the flow between electrodes.

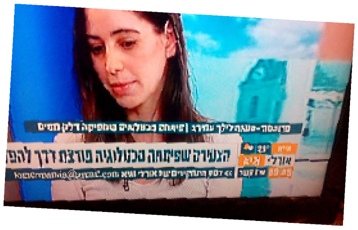

- 2016 – Israeli scientists Lilac Amirav (screenshot from Israeli TV), Yifat Nakibli and Philip Kalisman of the Technion (Israel Institute of Technology) in Haifa, Israel, developed a process of perfect efficiency (100%! rather than 60% before them) for the first stage of splitting water using sunlight. This good news hit major newspaper headlines and TV news worldwide http://phys.org/news/2016-02-scientists-efficiency-water-splitting-half-reaction.html

- 2016 – an international team of scientists aroused worldwide interest when they published their discovery that LIQUID water has two different states that phase in and out in the temperature range 50 ± 10°C.

- 2009÷2017 – Started in 2009 as 5 pages of Waterfuel Patents and research papers, but by now has grown into this giant reference compilation book with all the Waterfuel science that we could possibly squeeze into 900 pages (our printer's top limit), and with wholehearted appreciation and edification of its real creators: the scientists, the inventors, experimenters, bloggers and supporters.

- 2016-2017 (mainly) – apart from fuel cell based cars (e.g. the 2017 Toyota Mirai Fuel Cell Vehicle) and other hydrogen wonders, there also seems to be a plethora of stories, articles and videos about Waterfuel, in fact so many that they can fill up a whole new book in the near future. Just Google these keywords [water fuel 2017] and you will find a long list of news and science articles regarding new discoveries and developments that both scientists, media and social media are excited about:
    - Phys.org (Science X network): "Water, water, nowhere: Research indicates graphene could act as efficient and water-free hydrogen fuel cell membrane" https://phys.org/news/2017-05-graphane-efficient-water-free-hydrogen-fuel.html#jCp
    - Science Daily: "New materials could turn water into the fuel of the future" https://www.sciencedaily.com/releases/2017/03/170306151722.htm
    - Berkeley Lab: "New Materials Could Turn Water into the Fuel of the Future" http://newscenter.lbl.gov/2017/03/06/new-materials-could-turn-water-into-the-fuel-of-the-future/
    - Science Buddies: "Water to Fuel to Water: The Fuel Cycle of the Future" www.sciencebuddies.org/science-fair-projects/project_ideas/Chem_p099/chemistry/fuel-cell.shtml

  Now search for 'HHO' at http://www.sciencedirect.com/
  Search Facebook for HHO, Brown's Gas, Waterfuel or water-fuel, etc. and you'll find 100's of new stories, news articles and science references; like this movie found a minute a go on my Facebook:

- 2017 – new Waterfuel science papers, Patents and Open Source inventions keep coming up in science and government outlets around the world, in mainstream media as well as forums and social media. They use terminology that just a decade ago was labeled "weird" or ridiculed as "pseudoscience". Replication projects gain more popularity and the experimenters do not disappear into thin air for unknown reasons. Water-car news or even rumors are not immediately rejected because people seem to remember seeing or hearing something about it in mainstream news or somewhere else. Fascinating times… How do we make them GREAT times?

The Future of Waterfuel

Two centuries have passed since German philosopher Arthur Schopenhauer (1788-1860) made an interesting observation on how humans shift their reactions to (new) truth. Since then, his observation has been proven countless times. He said that a new paradigm [school of thought] will go through three inevitable phases:

1) First, it will be ***ridiculed.***

2) Then, it will be ***violently opposed.***

YOU ARE HERE: transition time

3) Finally, it will be ***accepted as self-evident truth!***

USE <u>THIS</u> BOOK TO HELP TRANSITION FROM STEP 2 TO 3

Waterfuel inventor Dennis Klein was interviewed in May 2006 by Ron Strom (WND) about his inventions. On the future of Waterfuel Klein said:

> ***"This technology is going to end up being in the mainstream eventually, and then the critics are going to look absolutely foolish."*** [source: WorldNetDaily.com]

Paradigm Shifts by Moray B. King

https://youtu.be/hIcuwOvZU5A

Moray tells Gary Hendershot about scientific paradigm shifts. I don't know if I agree with him or not, but he says that old-school scientists will never agree with new scientific concepts which are out of their schooling, and must therefore die off so that the next generation can embrace the new paradigms. What do you think?

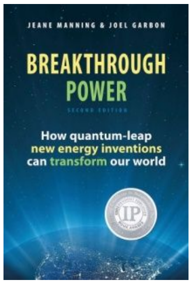

In her article "A New Physics for a New Energy Source", Jeanne Manning* describes in her own words how Moray King discovered the unconventional side of energy science:
www.bibliotecapleyades.net/ciencia/secret_projects/project117.htm

* *Jeane Manning http://changingpower.net/about/ is an award-winning author who co-authored the book 'Breakthrough Power' where you can read about major unorthodox Free-Energy inventors, and what they went through in terms of paradigm shifts at the very core of science… http://breakthroughpower.net/*

A famous example of how this goes down in our very day and age:

Who Killed the Electric Car (2006)

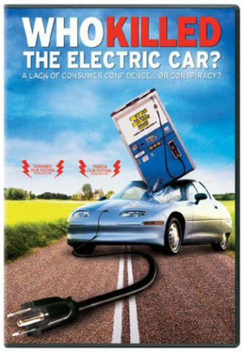

Amazon editorial review for this fascinating DVD says:

> ***"In 1996, electric cars began to appear on roads all over California. They were quiet and fast, produced no exhaust and ran without gasoline. Ten years later, these futuristic cars were almost entirely gone. What happened? Why should we be haunted by the ghost of the electric car?"***

Order your DVD from Amazon:

www.amazon.com/Who-Killed-Electric-Martin-Sheen/dp/B000I5Y8FU

Revenge of the Electric Car (2011)

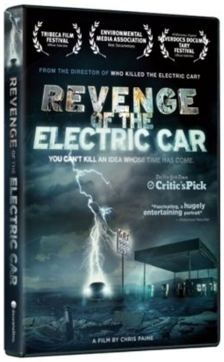

In this documentary, director Chris Paine takes you for a sneak peek behind the closed doors of Nissan, GM, and even Tesla Motors. This film tells the story of the global resurgence of the electric car. In essence, it's a sequel to 'Who Killed the Electric Car' and the subtitle, right on the DVD box, says it all →

YOU CAN'T KILL AN IDEA WHOSE TIME HAS COME

Order your DVD from Amazon: www.amazon.com/Revenge-Electric-Car-Tim-Robbins/dp/B005TZFZK6

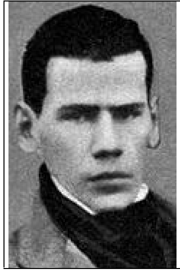

> ***"Since corrupt people unite amongst themselves to constitute a force, then honest people must do the same."***

~ Count Lev Nikolayevich Tolstoy (1828-1910), regarded as one of the greatest authors of all time.

Chapter 35.
"Sinbad and The Jinni" — the World's First Free-Energy Fable

What's an Arabian-Nights-Style Fable Doing in a Twenty-First-Century Science Book??!

This fable is here to highlight, in art form, an important point about the entire subject of Free Energy.

It's short, romantic and amusing – and after reading it I can guarantee that you'll have a different point of view to comprehend the next chapter, the very idea of "Free-Energy" and this book as a whole.

Are you ready for the world's first Free-Energy fable?

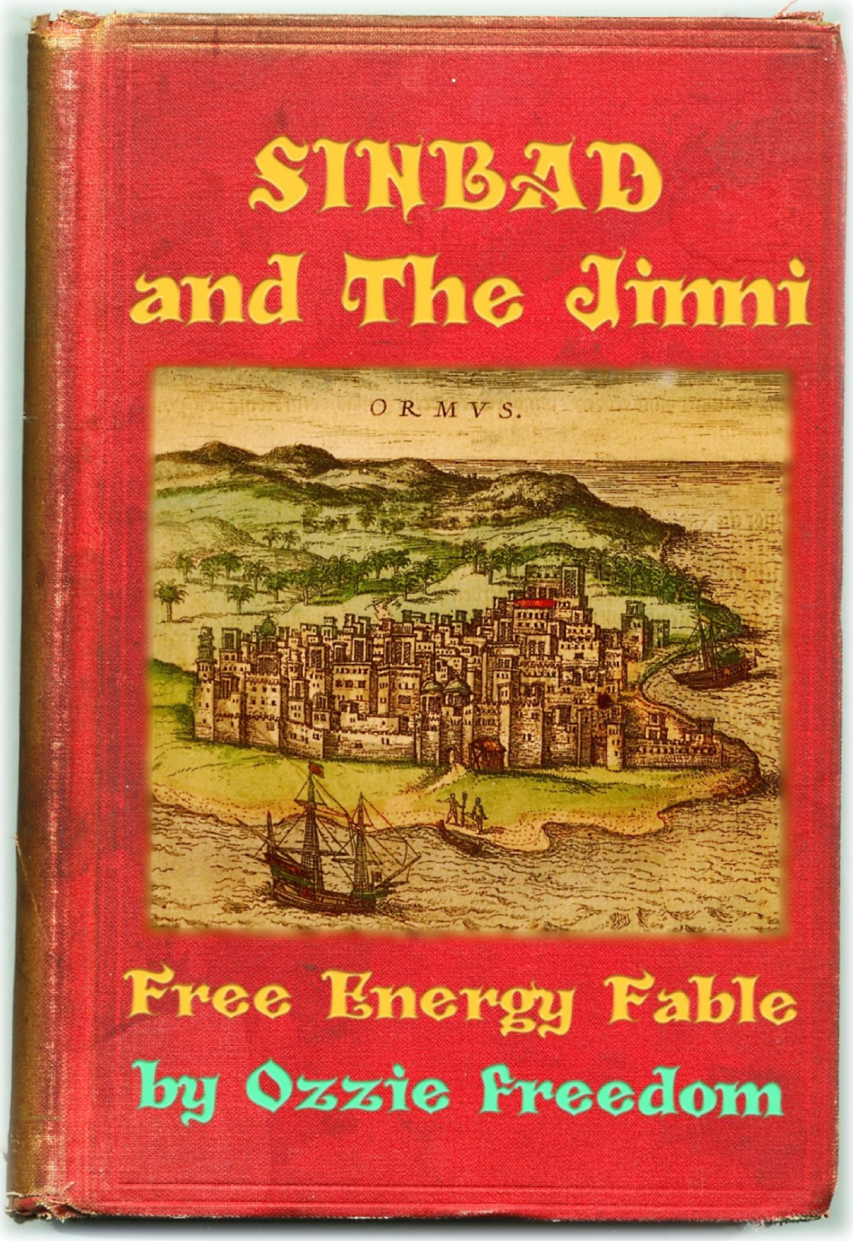

Sinbad and The Jinni

Boy makes money and friends with the unlikely help of a Jinni[230]

Free-Energy Fable** by **Ozzie Freedom
Inspired by "Arabian Nights"

Four thousand years ago there lived a boy named Sinbad. He used to row his small merchant boat across the Persian Gulf just as his father and grandfather before him, from Bandar-el-Tahiri to Bandar-el-Siraf. But he did not call it 'Persian Gulf' – he just called it 'The Great Sea.'

One morning he got up late and had to row harder than usual to catch up. As he was rowing he dreamed of finding a magical way to drive his boat without rowing, so he could stand at the bow, feel the wind and enjoy the vast space before him.

He continued to row for hours, scanning the magnificent clouds and wishing for some magical Jinni who would tug the boat by his magical powers.

But where would he find such a Jinni – and moreover how to convince a great Jinni to serve Sinbad – a mischievous youngster who hasn't done any grand deeds yet?

---

[230] Also spelled Genie. In Islamic Mythology: a spirit able to supernaturally influence mankind.

One moment arrived when Sinbad's lights came on: *"My father taught me to always confront a problem face to face rather than dodging it! I will do just that! Why would you learn from your fathers if you ain't gonna use it?!"*

Sinbad got up and very plainly acted what he has dreamt – he stood at the bow and observed the vast horizons before him. His mind was quiet and he was just observing, absorbing the Universe into himself with a silent request for help.

Suddenly, a ghastly burst of wind on his back nearly knocked him off the boat and he had to grab the front wedge to prevent himself from falling into the cold waters of the Great Sea.

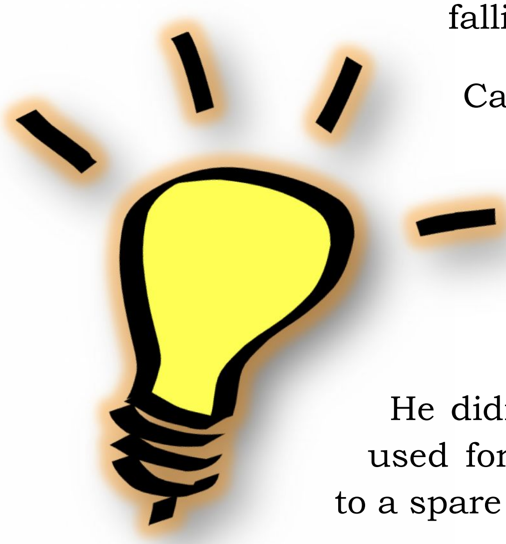

Catching his breath, he had another instance of "lights coming on" when he realized that THIS was the sign he was looking for – the Jinni has come to him for help – and inspired just the brilliant idea he needed!

He didn't waste a minute – grabbed the big cloth used for protecting the load during storms, tied it to a spare oar – and erected the world's first sail.

That sail wasn't very efficient at all but when he went back to rowing, he noticed extra speed and felt truly elated when he arrived at the port of Bandar-el-Siraf earlier than usual.

At the port, everybody knew Sinbad and his boat. He was that kind of boy who touched everybody's life. And everybody's daughter as well. When they noticed the strange new contraption they all wanted to know: *"What's this, Sinbad?"*

Sinbad said nonchalant that it was the harness for his new invisible Jinni that helped him tug the boat – and man, you should have heard the roars of laughter rolling down the little port! Heads popped out of the Kasbah[231] windows and a crowd gathered to watch the fight. But there was no fight – Sinbad was laughing just as hard!

It wasn't like Sinbad to try and prove himself right. When the laughter subsided he went about his usual business and then rested at the local inn of Bandar-el-Siraf. In the early hours of dawn he woke up with fresh ideas on how to harness his invisible Jinni in a better way.

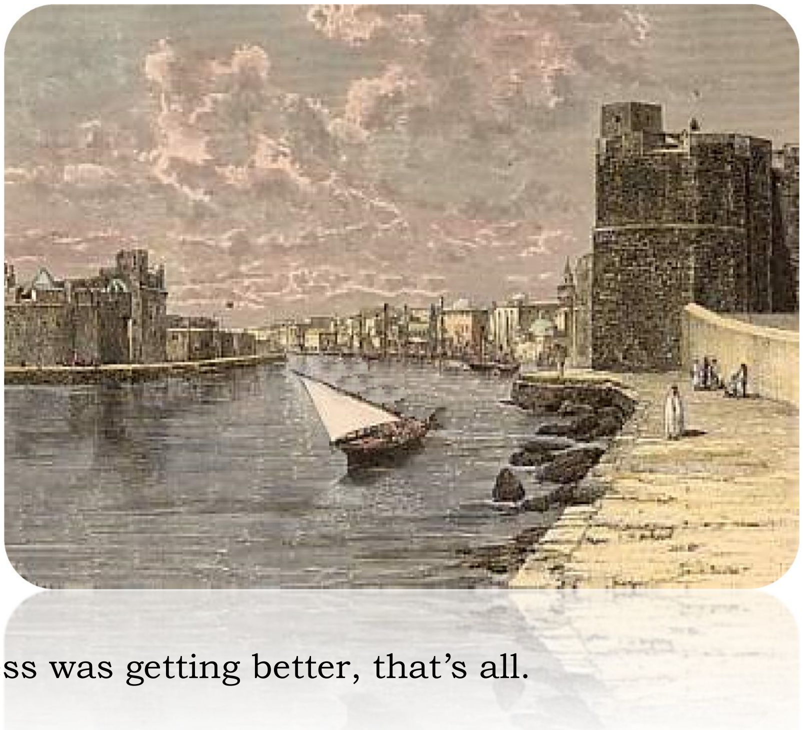

He went down to the port and built a new sail, less improvised now that it was easier to obtain materials. He then returned to sea and over the next few days experimented with various setups and how to use them in different wind conditions. The Jinni was just as big as he always was, Sinbad knew, but now the harness was getting better, that's all.

After a couple of weeks he barely needed to row on any given day and the people at the port noticed. What's the deal with the invisible Jinni, they inquired. Sinbad was reluctant to explain and only cracked prank remarks about his invisible Jinni and how great it was to cross the Great Sea with his newly recruited helper.

The mystery was starting to annoy the people.

One night, the daughter of the Grand Chief Of Port shared her concern: *"Sinbad, the people are jealous and my father is re-thinking your license to bargain here. Why don't you teach the people how to get their own Jinnis too?"*

---

[231] Small Islamic town.

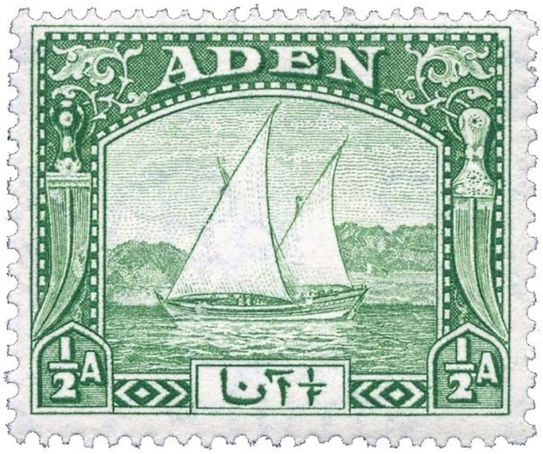

Beside every great man there is a great woman. And Sinbad listened. Teaching them how to obtain an invisible Jinni of their own was as easy as showing them how to erect a sail.

The rest is history. Many Arab merchants started using Sinbad's "Harness of The Invisible Jinni" and now crossed the Great Sea with ease. Sinbad didn't suffer from competition; on the contrary – he now became ever so popular with the merchants. And their daughters.

Four thousand years later, one late night Professor Fockenmaster sat at his keyboard and typed a message into an information-hungry world-wide-web:

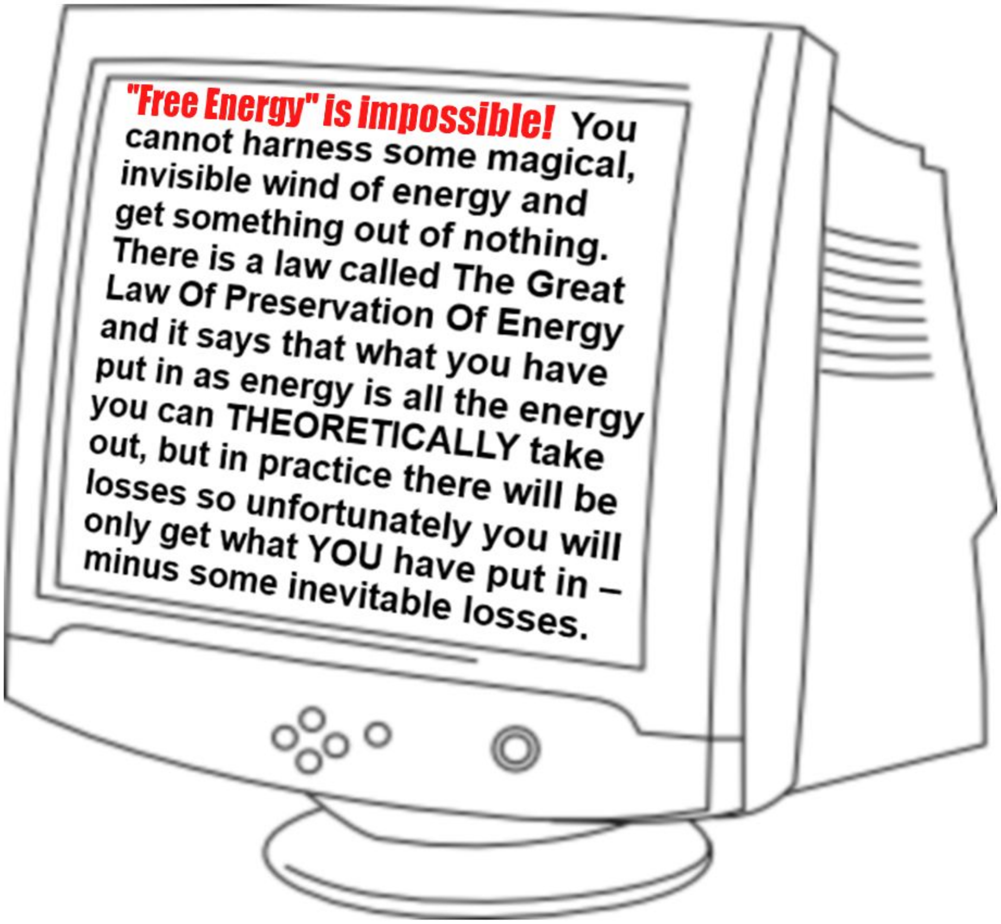

"Free Energy" is impossible! You cannot harness some magical, invisible wind of energy and get something out of nothing. There is a law called The Great Law Of Preservation Of Energy and it says that what you have put in as energy is all the energy you can THEORETICALLY take out, but in practice there will be losses so unfortunately you will only get what YOU have put in – minus some inevitable losses.

And the world listened.

Well, not the whole world. One boy (his name was not Sinbad) was laughing his ass off. He could hardly read Fockenmaster's last words through the tears in his eyes.

* * *

Chapter 36.

Over-Unity or Not Over-Unity: Storm in a Teacup[232]

From the News:

MIT researchers have created an "over-unity" LED

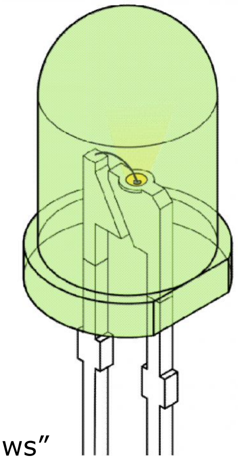

I'm deeply impressed. I love good news. But, from a scientific point of view, what really happened?

LED means Light Emitting Diode – the little "miracle" light that everybody and his sister are using nowadays; see illustration. →

The new "Over Unity LED" is said to produce 69 picowatts of light using 30 picowatts of power – which means an energy efficiency of 230%. Such efficiency puts it right up there with "perpetual motion" machines. HOW SILLY a statement coming from distinguished journalists!

No, no, the problem is not in the numbers, the problem is in the "news" you've been given. When you look deeper into the latest studies about this miracle LED, you find that there's nothing special about it but its operating voltage. I have a diploma in electronics and per my understanding all LEDs share the same "miracle" if you only made them work in that specific voltage zone of LED working spectrum.

The explanation, as they presented it, was that it doesn't violate the conservation of energy law since it appears to draw in heat energy from its surroundings instead, and turn that heat into light. Nice explanation. Only trouble is:

a) They admit, right there, that over-unity DOES exist, hence opening the door to any type of "perpetual motion" machine that produces results, and…

b) …all the while they ignore the fact that there are, and always have been, machines that draw free energy from the environment. Have you read **Sinbad and The Jinni** yet? Well, I think that by now you understand how ANCIENT this principle is – and used by how many millions of us.

---

[232] A storm in a teacup (British & Australian idiom): a situation where people get very angry or worried about something that is not important. [Source: The Free Dictionary]

Why I think everybody is wasting their time arguing about over-unity or not over-unity

What do they mean when they say “Over-Unity”? Can it exist in nature?

Over-unity (sometimes spelled overunity) is defined in Thermodynamics as the energy balance of a system, a situation where MORE energy is continually taken out of something than is put into it. ‘Unity’ in this context would mean an exact equilibrium of input and output. If the “output” is fed back into the same system, for example if you had a ball running up and down a closed track, then “unity” would mean that with each downward motion the ball would acquire just enough energy to climb up in order to complete the cycle and continue indefinitely. Yes, a perpetual motion machine of sorts.

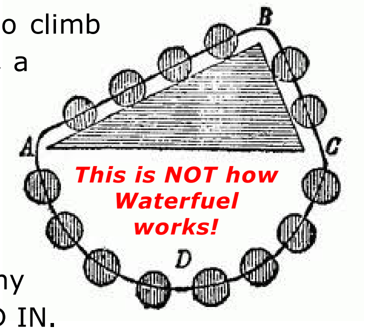

This is NOT how Waterfuel works!

But such a track-and-ball system would be nothing more than a museum novelty or a conversation piece for the coffee table. The bigger dream of energy hunters has always been over-unity even if they called it alchemy or witchcraft or any other name. A system that would PAY OUT more than INVESTED IN.

But here is the pitfall of this discussion: Unity, Over-unity, Under-unity – they all assume a closed system – a set of things isolated in their own little world and **CLOSED OFF** to the rest of the universe. When you try to explain a principle, you describe a certain finite set of components and disregard the rest. ***And that’s perfectly OK because this is done FOR THE SAKE OF SIMPLICITY of explanation.***

The Washing Machine Example

WE KNOW FOR SURE that the water in a washing machine is affected by the gravity of the Moon, Earth rotation, Sun flares, cosmic energy, barometric pressure and many other things – from cat’s hair caught in the machine to faraway earthquakes. All this is scientifically known, including mathematical formulas for the calculation and prediction of the technical details.

But if you were trying to teach somebody HOW TO USE A WASHING MACHINE and you started to explain all these things in great detail, at the end of the day he or she would know so much more about the universe – but not much laundry would get done…

Therefore, you *DELIBERATELY* assume a closed system while educating. This would be the only sensible reason for a scientist or a teacher to simplify the explanation.

HOWEVER... SOMETIMES WE ERR BY FORGETTING...

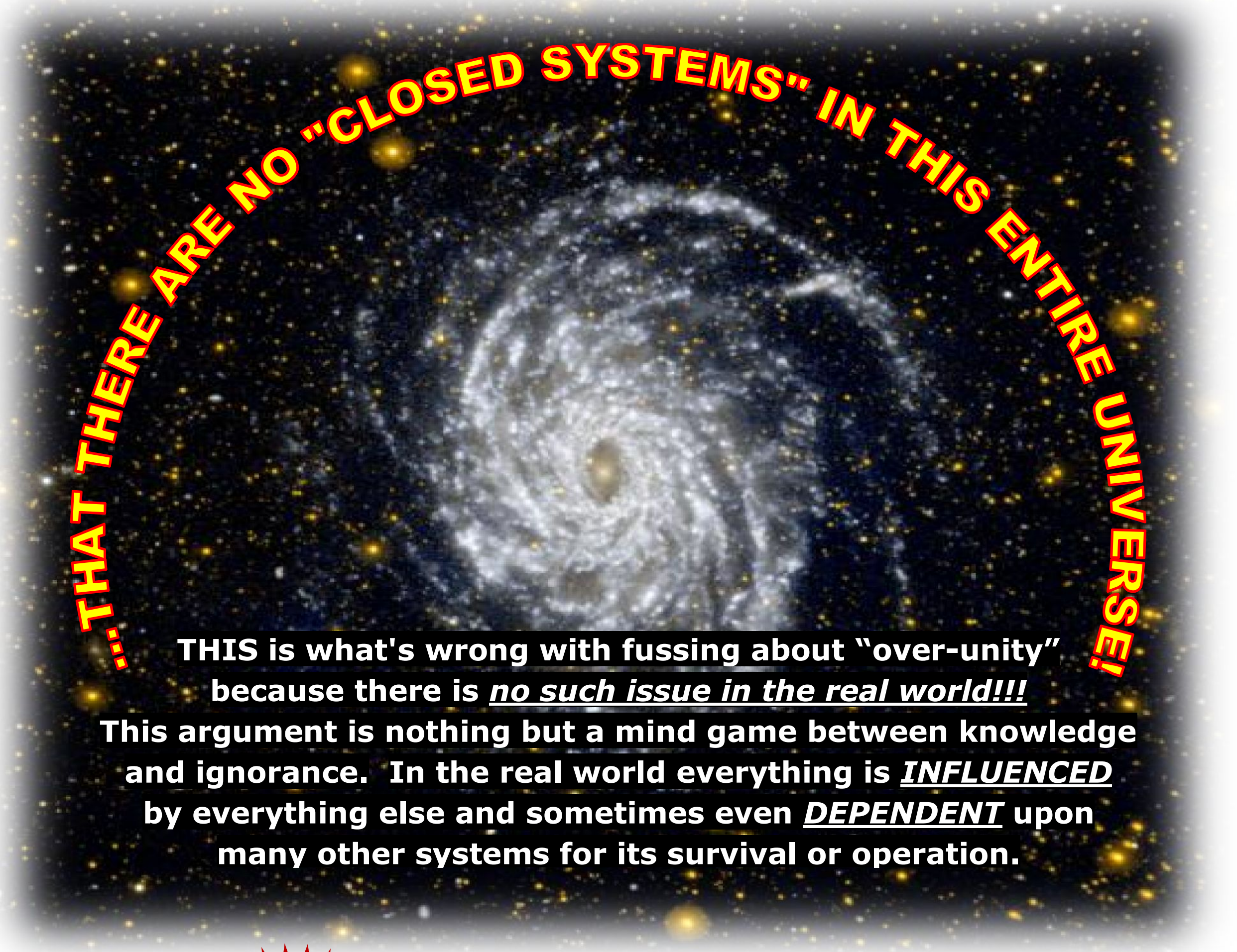

THIS is what's wrong with fussing about "over-unity" because there is *__no such issue in the real world!!!__* This argument is nothing but a mind game between knowledge and ignorance. In the real world everything is *__INFLUENCED__* by everything else and sometimes even *__DEPENDENT__* upon many other systems for its survival or operation.

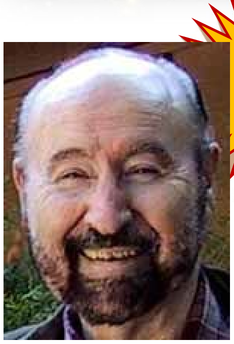

Lieutenant Colonel (U.S. Army, retired) Thomas E. Bearden, Ph.D.*, a famous researcher and inventor in the field called **"Energy From The Vacuum,"** explains that the *context* of, or *viewpoint* from which we should be examining "over-unity" systems, is **OPEN SYSTEMS** rather than **closed ones**.

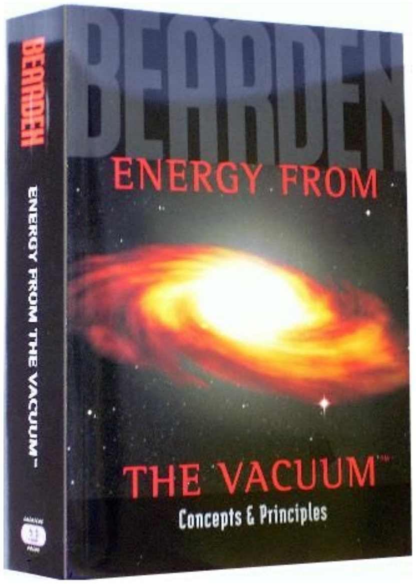

* He is Ph.D. in Science. Bearden is also: Master of Science (nuclear engineering); Bachelor of Science (mathematics - minor electronic engineering); Co-inventor of the 2002 Motionless Electromagnetic Generator; Director, Association of Distinguished American Scientists; Fellow Emeritus, Alpha Foundation's Institute for Advanced Study.

Order Tom Bearden's must-have book → from: http://www.cheniere.org/books/efv/

Allow me to repeat this self-evident truth one more time:

THERE ARE NO "CLOSED SYSTEMS" IN THIS ENTIRE UNIVERSE!

In his book “**ENERGY FROM THE VACUUM—Concepts & Principles**” Tom Bearden explains the differences between the two (selected excerpts below):

> *We did find it necessary to correct the classical thermodynamic definitions of “open system” and “closed system”. To define a closed system as closed only to mass transfer, but open to energy transfer, is a gross non sequitur*[233]*. ---*
>
> *Thermodynamics defines a closed system as one in which mass is not exchanged across its boundary, but energy can be. That definition permits a closed system to receive excess energy from its active environment, and thereby reduce its entropy*[234]*. ---*
>
> *The reader is thus warned that, henceforth, when we use “open system” we mean one where either energy or mass or both exchanges across the system boundary. When we use “closed system” we mean one in which neither energy nor mass exchanges across the boundary. In short, the notion of a “closed system” has been redefined into what classical thermodynamics calls an “isolated system”. We already know from particle physics and the active vacuum --- that* ***there is no such thing in all the universe as a truly closed system.***

There’s much more to the science and Bearden does a wonderful job of analyzing and describing it. To have the full conceptual science obtain Bearden’s 977-page book “ENERGY FROM THE VACUUM—Concepts & Principles” which is available at www.cheniere.org/sales/buy-ev.htm

---

[233] From Latin: literally it says “does not follow” and it means non-logical or “doesn't add up.”

[234] Measure of the level of disorder in a system. Specifically in Thermodynamics, it means the amount of **unavailable energy** in a system.

WHY THIS DISCUSSION is OUT-OF-FOCUS

What's wrong with skepticism?

Nothing wrong with skepticism, but those who remain "skeptics" AFTER you've showed them all the facts, demonstrate that they don't understand the basics of physics, period. I'm sorry to have to insult some "skeptics" who think highly of themselves. But if one is blind to facts brought before his very eyes, then he's not friends with true science.

But blindness is not the greatest **enemy** of science… because the greatest **enemy** of science is the INSISTENCE on keeping one's eyes shut and the refusal to OBSERVE simple, obvious facts. The inability to learn and to self-correct.

Science is not dead – and is never going to die. But science is greatly misunderstood and abused nowadays. Its worst part is the blind man who refuses to look. Some politicians are known to say (one way or another): "Don't confuse me with the facts!" and we think it's a good joke even though they really mean it… But when scientists say it, although indirectly, it's not funny. It's sad and dangerous.

Why supporters need correction, too (no offense please)

Supporters of Free Energy, please, my friends, by trying to argue with skeptics, WE ALL LOSE FOCUS. And the focal point, in my humble opinion, should be to keep seeking better and better ways to get energy out of freely available sources such as Bearden's "vacuum" as well as wind, solar, water, etc. Arguing about over-unity-or-not-over-unity wastes valuable time and resources. What I think we SHOULD do:

> *Let's stop trying to prove ourselves right, and put a shoulder-to-shoulder effort to make FREE ENERGY such an everyday reality that nobody will ever again dare call it voodoo or hoax.*

Additionally, I like the term *Renewable Energy* because it explains a good principle. However, I'd like to see us stand tall and NOT say "Renewable Energy" when we actually want to say "Free-Energy" – it's OK to call the baby by its proper name. Provided, of course, that you explain exactly what you mean, as demonstrated in this book.

Examples of Free-Energy Open Systems are all around us!

Consider WIND ENERGY as in the story "Sinbad and The Jinni" (Chapter 35), as well as other similar systems, and see how these ***work as open systems***. Look deeper into the non-magical "magic" of Waterfuel, as provided in this book from the viewpoints of Waterfuel giants like Wiseman, Kanarev, Meyer, Puharich, Schauberger and others.

From the Mouths of Giants

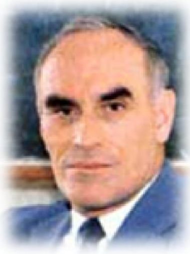

Here is Prof. Kanarev's viewpoint on today's Energy Problem – which happens to agree precisely with Jules Verne's vision from the 1870's and Dr. Puharich from the 1960's:

"WATER IS THE MAIN POWER CARRIER OF FUTURE POWER ENGINEERING"

Vital source of information to solve Waterfuel problems on the theoretical level, mostly in very good English

Source: http://www.guns.connect.fi/innoplaza/energy/story/Kanarev/index.html

In Russian: ***"ВОДА – ОСНОВНОЙ ИСТОЧНИК БУДУЩЕЙ ЭНЕРГЕТИКИ"***
Translation: ***"WATER (is the) MAIN SOURCE OF (the) FUTURE OF ENERGY"***
http://www.sciteclibrary.ru/rus/catalog/pages/9881.html

Chapter 37.
Who is "The Next Sinbad"?

Have you read "Sinbad and The Jinni" yet? It's in Chapter 35 and highly recommended.

"The Next Sinbad" is a figurative way to describe the next explorer of Waterfuel energy or any other Free-Energy technology; the true energy scientist and true innovator in this field, the one who actually causes it to move forward by leaps and bounds – and gets practical results that people can use in everyday life, and thereafter teach their sons and daughters.

Now, what would s/he be like? How would you know these "Sinbads" when you see them?

If you ask me, I'd say that "The Next Sinbad" is characterized by the very same virtues as that mischievous boy, Sinbad, in the fable. Let's try and describe his traits one by one, as they relate to the subject matter of this book:


Sinbad book illustration by Rene Bull, 1898

1. He does not accept things as they are, even though his ancestors have always done something in such-and-such way. Although he respects his ancestors greatly and wants to learn from their wisdom, he feels obliged to follow their INSPIRATION, but not necessarily follow everything they have done exactly the way they have. Tradition is important – but ***times must change*** just as well.
2. "The Next Sinbad" is very inquisitive regardless of his biological age; he tries and he explores new ideas and new methods – and he never quits on his quest.
3. He's not afraid of criticism.
4. He listens to the smart advice of his loving woman (NEVER listen to a hateful woman! I'm serious – ask any successful man you know). *In the fable, it was his woman's smart advice that got Sinbad to open-source his invention to not only retain his license to do business at the port, but also to propel his career to new heights.*
5. He listens to the Universe itself, to the signals ("omens" they used to call them) that he perceives or gets from his environment or from a book or from within or from wherever they may come from.

6. He shares his knowledge with the world, thereby gaining more business and new friends without even trying.

7. Most important, in my humble opinion, is this trait of Sinbad: he collects – and uses – all the available tech and knowledge of his time, in order to extract useful information and arrive at a USEFUL and WORKABLE solution to a problem. He does not wait 4,000 years for some better science to come along and save the day. He uses what he's got TODAY in order to find a solution TODAY.

8. And possibly an even greater characteristic of "The Next Sinbad" – you'll know him immediately by this one – is his reliance on EXPERIMENTING. Remember in the fable, when Sinbad experimented with different sail setups until he improved it to better harness his "invisible Jinni" – the wind – or more correctly the combination of wind power AND HIS OWN SMART EXTRACTION OF ENERGY FROM THE WIND. All the while, he believed it to be a Jinni.

And this belief of his, some highly educated folks may regard as "primitive" or superstitious. But ask yourself: was he using the best of wisdom for HIS time, for HIS culture and HIS schooling? I think he was. Yet the important method he was using – as he intuitively KNEW it to be the right method: "EXPERIMENT, SINBAD, EXPERIMENT!" he probably told himself, "and if something works, it works."

The merchants at the port laughed at him but he, Sinbad, got more production done with less sweat because he knew that if something works then he should use it, and he knew that the ***THEORY WOULD SOONER OR LATER CATCH UP TO SPEED WITH THE FACTS*** and adapt itself to the facts, not vice versa. Not that it never happens theory-first, but regardless of sequence the general rule is:

'Experimnent is King, Theory its Servant.'

And by these eight traits you will recognize "The Next Sinbad". He's probably already there hard at work, and maybe you'll find him (them) between the pages of this very book. ***Teach these eight traits to your young ones and students – and there will be many more Sinbads. Remember how much we, a world beaten half to death, need them in order to have any long-term future.***

Chapter 38. **Waterfuel in Popular Culture** (and the Hexavalent Chromium Ordeal)

Chain Reaction (1996*)

** At least 3 more unrelated movies used "chain reaction" in the title.*

A MUST SEE!!! The plot of the 1996 action film revolves around a technology to turn water (via a type of self-sustaining bubble fusion and electrolysis) into fuel – and the half-official-half-hidden efforts to suppress it.

Order your DVD from Amazon:
http://www.amazon.com/Chain-Reaction-Keanu-Reeves/dp/B000NTMA0Q

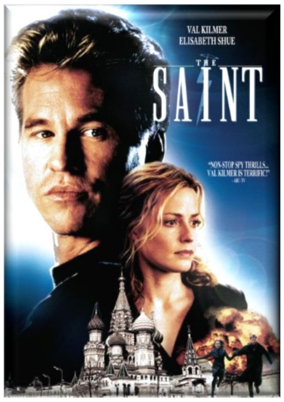

The Saint (1997)

LOVE THIS MOVIE!!! Val Kilmer plays the Saint, a character based on the classic TV series that starred Roger Moore. Elisabeth Shue plays a lovely scientist who is truly fascinated with "cold fusion" technology – but she cannot achieve success without the protection of the dark and mysterious thief who is a (funny) master of disguise… Will the evil politician played by Rade Šerbedžija win the day by suppressing cold fusion technology to his own ends – or will their love and skills have the upper hand?

Order your DVD from Amazon:
http://www.amazon.com/Saint-Val-Kilmer/dp/6305127646

Cold Fusion: Fire From Water

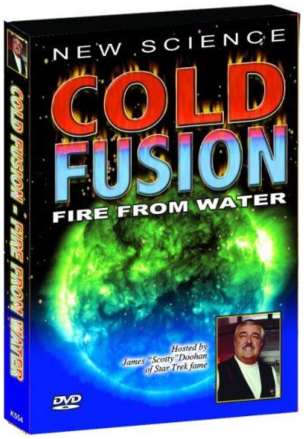

This documentary is actually an inquiry into the feasibility of "Cold Fusion" that tries to analyze why the big fight over it being true or false. Presented by James Doohan (Scotty from Star Trek) and features Sir Arthur C. Clark and cold fusion scientists.

Order your DVD from Amazon:
http://www.amazon.com/Cold-Fusion-Fire-From-Water/dp/B0007TKNWY

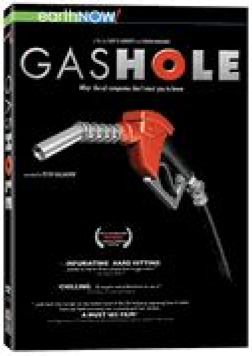

GasHole (2010)

A documentary film about the history of oil prices and the future of alternative energy; mentions multiple stories regarding engines that use water to increase mileage/efficiency.

Order your DVD from Amazon:
http://www.amazon.com/Gas-Hole-Peter-Gallagher/dp/B004L51CZM

That 70's Show

A water car is described in the pilot episode for the ***That '70s Show*** sitcom, that sounds like a direct reference to Stanley Meyer's water car.

Steven Hyde (played by Danny Masterson) says: *"There is no gas shortage, man, it's all fake. The oil companies control everything. Like there's this man who invented this car that runs on water, man. He's got fiberglass cooled engine and it runs on water."*

Fez (played by Wilmer Valderrama) says: *"So it is a boat…"*

Steven answers: *"No, it's a car. Only you put water in the gas tank instead of gas – and it runs on water!"*

The water car is also referred to in the 21st episode of the show's 5th season.

Like Water for Octane (2001)

Warning: this one is an ANTI-Waterfuel propaganda movie!

This episode of the TV series "The Lone Gunmen" tells the story of a water-powered car that Melvin Frohike (a character in the show) saw with his own eyes back in 1962. Melvin and his friends find the car, discover that it is for real – and even drive it in the back yard.

Anti-Waterfuel action film "Like Water for Octane" was the 4th episode of TV series "The Lone Gunmen." It promoted the idea that water cars would surely destroy the economy… Watching it may be thought-provoking for you my reader, but the average viewer of that show received this clear message: ***"Waterfuel is BAD for you!"***

www.youtube.com/results?search_query=%E2%80%9CLike+Water+for+Octane%E2%80%9D

http://www.imdb.com/title/tt0243069/

*In my opinion. ~Ozzie

The Water Engine (1994)

Copies very hard to find (why?!) Originally a David Mamet radio play that was made into a TV film in 1994 and stage played in several countries. Plot: 1934, Charles Lang invents an engine that runs on water. The Oil Company lawyers try to either buy his plans or else stop Lang by force. Lang must decide whether to save himself – or future generations.

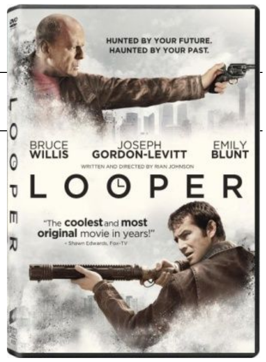

Looper (2012)

This well-make, inspirational, thought-provoking sci-fi thriller has a short appearance of the Waterfuel super-car ***Scorpion*** driven by Bruce Willis. Order the DVD:
www.amazon.com/Looper-Joseph-Gordon-Levitt/dp/B005LAII8A

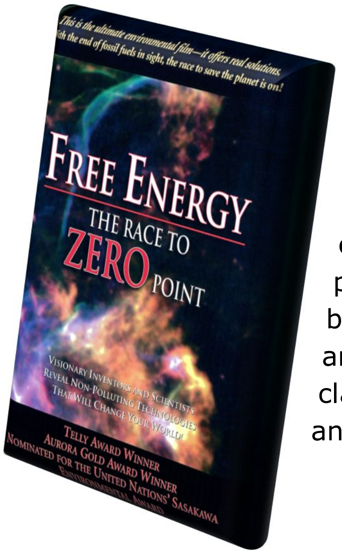

Free Energy: The Race to ZERO Point

Dubbed "the ultimate environmental film", it examines many inventions and offers solutions. Hosted by Bill Jenkins (formerly of ABC Radio) this comprehensive documentary features physicists and inventors who are challenging orthodox science to bring these non-polluting technologies forward despite ridicule and suppression. It shows actual working prototypes that defy classical physics including phenomenal experiments in anti-gravity and the transmutation of metals. Featured inventions:

☐ The Patterson cold fusion power cell
☐ Troy Reed's magnetic "Surge" motors
☐ Paul Pantone's GEET processor for increasing fuel efficiency in cars
☐ Joseph Newman's rotating magnet "over unity" motor
☐ Dennis Lee's Low temperature phase-change technologies
☐ John Hutchison's amazing anti-gravity experiments.

Featured internationally recognized scientists and authors:

- Tom Bearden
- Hal Fox
- Shiuji Inomita
- Moray King
- Eugene Mallove
- Jeanne Manning
- Dr. Brian O'Leary
- Dr. Tom Valone.

Order your DVD from 'Lightworks Audio & Video':
http://lightworksav.com/freeenergy-theracetozeropointdvd.aspx

Prof. Yull Brown Explains & Demonstrates

If you want to hear and see Brown's Gas "from the horse's mouth" then there is a DVD series made for you. The first three shown below are with Professor Yull Brown: lab demos, product presentation and a rare interview that's probably the last he ever gave in front of a camera. Other DVD's are workshops with Andrew Michrowski - President of the Planetary Association for Clean Energy. Order from www.NotTaughtInSchools.com or Amazon.com

What is Browns Gas? Browns gas is ordinary water that is separated into components of Oxygen and Hydrogen, but the atoms are not allowed to separate into their monatomic state.

They are kept in their diatomic state. By doing this, a number of amazing properties are revealed! Just Watch!

www.NotTaughtInSchools.com

Lets take apart th
engine!!! On this v
Gas Shop. The fa
and browse aroun
commercial versio
10 minute tour aro
of the machines re
machines that soci

Now You Know T

www.N

Walk Through a Toronto, Canada, Factory and See the Browns Gas Generator In Production!

Energy From Water - The Next Global Fuel!

www.NotTaughtInSchools.com

This lost footage gives an amazing discussion covering many of the topics that are not discussed in demonstrations and dissuasion groups on Browns Gas.

Since the death of Yule Brown a several years ago, the interest in Browns Gas has skyrocketed! This interview is probably the only surviving interview where Yull 'talks shop' behind the scene. This footage was taken by a home camcorder by some friends visiting his home. The quality is not excellent but the information is. Yull talks about his dreams of creating a clean burning, non-polluting, efficient, low cost alternate fuel for the planet. This information cannot be found anywhere!

www.NotTaughtInSchools.com

ATTENTION: "Energy from Water!!! This is a complete discussion of how Browns Gas works. An excellent outstanding video training by a Browns Gas expert, complete with commentary by Browns Gas engine designer and physicist Andru Michrowski.

This is the story of Yule Brown and the principles of Browns Gas.

Without jumping ahead too much, here is one of the features of Browns Gas: Browns Gas burns at a fraction of the cost of gasoline... about 1800 liters of Browns Gas costs about.... 40 cents!!!!!!!!!!!! - Wow!

www.NotTaughtInSchools.com

Uncredited on the box and in the description, yet this is ***George Wiseman of Eagle-Research,*** demonstrating Brown's Gas capabilities

"The Underground Water Fuel Lecture"

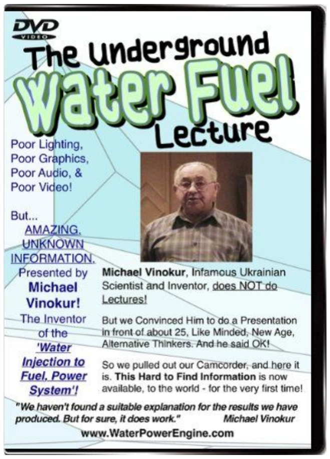

This is a truly "underground" production made by private individuals. Ukrainian scientist and inventor Michael Vinokur does not do lectures, but was convinced to give a lecture to a small group of like-minded experimenters. The result of filming this event is far from perfect in terms of quality, but the information is rare and may be very interesting for researchers who have seen the mainstream data and are hungry for more.

Highlights:

- Vinokur explains the secrets of the water injection
- Patents on Water Injection dating back to 1884
- Why Water Injection has not worked before
- Water Injection is proven by government, but suppressed
- All automobile manufacturers have used Water Injection at one time or another
- The only modification is a 1/8" brass pipe insertion
- Water Injection will not rust your engine!
- Why, when you just drive, the system takes care of itself
- And much more…

"We haven't found a suitable explanation for the results we have produced. But for sure, it does work." Michael Vinokur.

Order your DVD from Amazon: http://www.amazon.com/The-Underground-Waterfuel-Lecture/dp/B00E6WRVNC

DVDs of installation instructions with Michael Vinokur:
http://www.amazon.com/Energy-Water-Engine-Conversion-Installation/dp/B00E6WRAV0

Consider ordering this 4-DVD set that has one DVD about *Methods Of Water Engines,* another is the lecture and two more DVDs of installation instructions with Michael Vinokur:
http://www.amazon.com/Energy-Water-Package-Ukraine-Scientest/dp/B00E6WTXR4

Fuel: Change Your Fuel, Change Your World

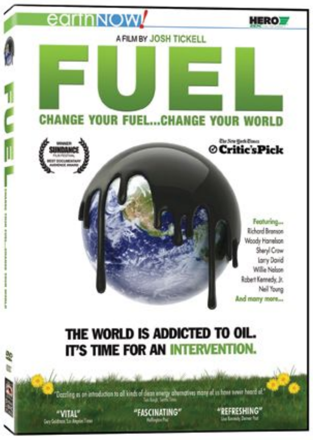

Josh Tickell's stirring, radical and multi-award-winning FUEL may be known by some as the "little energy documentary," but in truth, it's a powerful portrait of America's overwhelming addiction to, and reliance on, oil. Having been born and raised in one of the USA's most oil producing regions, Tickell saw first-hand how the industry controls, deceives and damages the country, its people and the environment.

After one too many people he knew became sick, Tickell knew he just couldn't idly stand by any longer. He decided to make a film, focusing both on the knowledge and insight he has discovered, but also giving hope that solutions are within reach. A 'regular guy' who felt he could make a difference, he spent 11 years making his movie, showing himself – and others – that an individual can indeed make a difference.

Visit the official website: http://thefuelfilm.com/ -- and order the DVD from Amazon: http://www.amazon.com/Fuel-Change-Your-World/dp/B003CAKXAC

Water – The Great Mystery

A MUST SEE!!! This list will not be complete without this water film, created in 2008 by Russian filmmakers Saida Medvedeva and Sergey Shumakov with cooperation of scientists from the USA, UK, Russia, Israel, Japan, Kazakhstan, Austria and China (you may recognize Martin Chaplin and Masaru Emoto whose discoveries on water anomalies and structure are mentioned in 0).

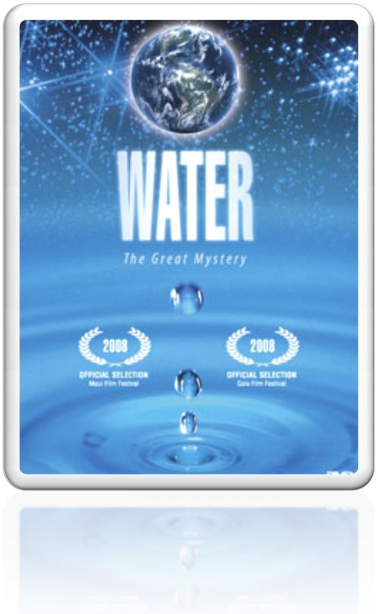

At least one English version was narrated by my Studio City neighbor Lex Lang who, with his wife Sandy Fox, promote water awareness and other projects (Love Planet Foundation) and unique water products called "H2Ohm – Water with Intention" – www.H2Omwater.com

The film is obviously about water – it covers fascinating stuff that I have some (good) experience with, such as water memory mentioned in 0. I've watched it many times, took notes like a good student and enhanced my understanding of water several times fold.

Between all the topics it even touches on Waterfuel (it's only fair, because just as we "Waterfuelers" cannot be complete without the water guys, how can they be complete without us). Chapter 20 and Chapter 21 give Patents and some formulas for creating water and fuel mixes to be used by engines. In this film, researcher/inventor Zhang Guohua from Dalyan, China, demonstrates the mixing of ***"structured water"*** with fuel. He's interviewed reporting a 5% increase in engine power along with 20% better fuel economy. Guohua also says: "Our government sees this as very important."

According to Dr. Konstantin Korotkov (www.Korotkov.org) who also appears in the movie, Guohua invented a method for ***structuring water*** (see 0) with the help of arc magnetism; he created a device for receiving magnetized water (self-revolving energy riser) that can change the structure of water.

Order your DVD copy from Amazon:
www.amazon.com/Water-Great-Mystery-Saida-Medvedeva/dp/B001EJ1WQW

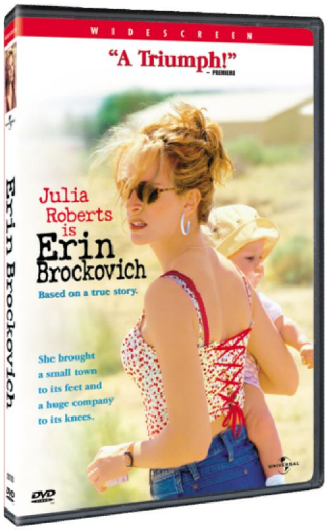

Erin Brockovich (2000)

Julia Roberts excels in this David-vs.-Goliath struggle that's based on the very true story of bimbo-turned-activist Erin Brockovich. The story starts when Erin was an unemployed single mother who became a legal assistant and almost single-handedly brought down the California utility giant PG&E and made it pay unprecedented millions in damages for polluting a city's water supply.

Order the DVD from Amazon: http://www.amazon.com/Erin-Brockovich-Julia-Roberts/dp/B00003CXFV/

But what's this film doing in this list? First and foremost, it's one of the greatest activism/inspiration films of all times. Second, the technicalities of Waterfuel often lead to the accusation by some of its attackers, saying that water electrolysis pollutes the environment by creating (just like in the film) a nasty substance called 'Hexavalent Chromium'.

Well, the fact is that this MAY be an issue **IF ELECTROLYSIS IS DONE INCORRECTLY.** Therefore the rest of the chapter is dedicated to show ***scientifically*** that the solution is not only cheap but also very, very simple.

The rest of the chapter is not directly about culture but it relates to Erin Brockovich the film, as it brought the subject of Hexavalant Chromium into public view – and rightfully so.

NEUTRALIZING THE ELECTROLYTE

Why you should neutralize the electrolyte before disposing it

The used electrolyte (water with catalyst) from an HHO Generator may be environment-unfriendly and should be neutralized before disposing. The main chemical that we're concerned about is called 'Hexavalent Chromium' or Cr(VI), that may or may not be produced in significant amounts by your system, depending on several factors such as catalyst type and the metals you use. To be on the safe side, you can easily and cheaply neutralize it yourself thus protecting your environment.

How bad is it?

Cr(VI) is widely used in leather tanning, wood preservation and in the production of stainless steel, paints, textile dyes, videotapes and other products. It is also released when melting chromium, contained in welding fumes, as well as other by-products of industry.

In 1985, for example, an estimated amount of 136,000,000 kilograms (300,000,000 lb) of hexavalent chromium was produced. You may have several products in your home or shop containing this chemical. According to research, it is not necessarily true that ELECTROLYSIS OF WATER produces Cr(VI) in significant quantities, or any at all. It depends on the metals used in the Electrolyzer.

IMPORTANT IN EITHER CASE: Spodie also noted that should a chemist run a chemical test he could find some **chromium** in the water, but that does not necessarily mean that he has found **hexavalent** chromium in it! The basic "Chromium Test", says Spodie, only seeks **chromium in general,** and therefore it misses the point because not all chromium is Cr(VI).

George Wiseman of Eagle-Research Ltd confirmed that no significant amount of Cr(VI) is released in normal low-temp electrolysis.

IMPORTANT IN EITHER CASE: Spodie also noted that if a chemist would run a chemical test he could find some **chromium** in the used electrolyte, but this does not necessarily mean that he has found **hexavalent** chromium in it! The basic "chromium test," says Spodie, only seeks **chromium in general,** and therefore it misses the point because not all chromium is Cr(VI); in fact, chromium Cr(III) is even healthy!

How bad is hexavalent chromium? The Occupational Safety & Health Administration (OSHA, part of US Department of Labor and THE authority on workers safety and health) says in their official website OSHA.gov that *"Workers who breathe hexavalent chromium compounds at their jobs for many years may be at increased risk of developing lung cancer. Irritation or damage to the eyes and skin can occur if hexavalent chromium contacts these organs in high concentrations* **or** *for a prolonged period of time."*

Low-voltage electrolysis with Stainless Steel 316L doesn't pose such a health risk.

How to Handle and Dispose of Used Electrolyte?

Despite the above, hexavalent chromium IS TOXIC and we must treat it as such, assuming that one might be producing it by any chance, even if small quantities.

Low-Cost Chemicals to Neutralize Cr(VI)

In a 2005 study supported by the National Natural Science Foundation of China, researchers from the Department of Environmental Engineering in Zhejiang University were successful in eliminating 100% of Hexavalent Chromium, using a common mild oxidizer called Potassium Dichromate (used in many labs and industries). The complete research paper, titled "Removal of hexavalent chromium from aqueous solution by iron nanoparticles", can be found and printed at:
http://www.pubmedcentral.nih.gov/articlerender.fcgi?artid=1390446
(also at http://www.ncbi.nlm.nih.gov/pmc/articles/PMC1390446/) It's in English so you don't have to know Chinese. The graphs will print small – click each one to open a larger graph. *{Thanks to the* ***National Center for Biotechnology Information, U.S. National Library of Medicine,*** *for making this information available. ~Ozzie}*

Additionally, US Patent number 5,304,710 explains how to neutralize hexavalent chromium using substances such as Ferrous Sulfate and Calcium Hydroxide: http://www.patentstorm.us/patents/5304710/description.html

Lab-grade Ferrous Sulfate can be purchased cheaply from:

Science Shop USA
1043 Di Giulio Avenue
Santa Clara, California 95050-2805, USA
Phone: 800-282-3248
Hours: 9 a.m. to 5:30 p.m. (Pacific Time)
www.scienceshopusa.com

Lab-grade Calcium Hydroxide can be purchased cheaply from:

High Valley Products, Inc.
1134 West 850 North
Centerville, Utah 84014, USA
Hours: Monday-Friday 8 a.m. to 5 p.m. (Mountain Time)
Phones: 801-295-9591, 1-855-233-9591 or 1-855-234-9591
www.hvchemical.com

Home Method to Neutralize Cr(VI)

1. *Dump the used electrolyte from your HHO Generator into a bucket.*
2. *Add a cup of* ***table sugar*** *and mix well.*
3. *Let it stay overnight. The sugar will convert the Cr(VI) into the safe and stable 'Trivalent Chromium' Cr(III).*
4. *Then dispose into sewage.*

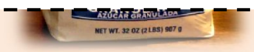

Is this supported by science? Look here!

Phil Berardelli, in his article "Sweet Solution for Chromium Pollution," reported in "ScienceNOW" (http://sciencenow.sciencemag.org) of 29 March 2007, that chemist Bryan Bilyeu of Xavier University of (New Orleans, Louisiana, USA) has discovered that adding a FRUCTOSE solution to waste-water and soil contaminated with Cr(VI), removes 94% of the contaminate. GLUCOSE has also been researched and was found to remove 93% of the contaminate. According to Berardelli's article, the sugar in these household materials converts the toxic chromium Cr(VI) into the naturally occurring AND MORE STABLE Cr(III) [chromium-3 or "Trivalent chromium"] which is a vital nutrient for our body's health.

FRUCTOSE and GLUCOSE are abundant in:

- High-fructose corn syrup,
- Corn sugar,
- Grape sugar,
- Crystalline fructose,
- Honey, etc.

Also: use better metals!

Make the extra effort to get and use only 316L wire or plates for your HHO projects. MAKE SURE IT IS TRUE 316L from a trustworthy source because quality metal will last longer and create less waste matter.

Chapter 39. Glossary

UNIT CONVERTER – MPG (Miles Per Gallon) ←→ KPL (Kilometers Per Liter):

- If you have MPG and you want KPL - divide by 2.839 (so 1 MPG = 0.35 KPL)
- If you have Miles Per Liter and you want KPL - multiply by 1.601
- If you have MPG and you want MILES PER LITER - divide by 4.545

For general purposes: www.digitaldutch.com/unitconverter or www.onlineconversion.com

Ab initio (Latin): from the beginning, from scratch.

AC: Alternating current. Electrical energy (electrical current, voltage) that alternates cyclically between positive and negative in polarity.

Adiabatic: No heat enters or leaves the system.

Ampere (amp): A measure for electrical flow. How many electrical particles flowing in a conductor (wire, resistor, etc) per unit of time.

Animalistic: in the manner of an animal; savage; untamed.

Anion: Negatively charged ion, especially the ion that migrates to an anode in electrolysis.

Annealing: Softening

Annulus: A ring-shaped object, especially a region bounded by two concentric circles.

Anode: The positive-charged electrode (wire or plate) in an Electrolyzer (HHO Generator) or battery. The electrode that gets the positive voltage. In an Electrolyzer, this is where the oxygen is being produced.

Antediluvian: Ancient (origin: it literally means "before the Flood" from Biblical time).

Atomize, Atomization: Converting liquid or substance into a very fine mist (but not individual atoms as the name suggests). Also see 'Vaporize'.

AVEC: Air + Vortex = Economiseur Carburant (Air & Vortex Fuel Saver) inspired by achievements in Belgium and France with a single "VortexValve™" which reportedly reduced fuel consumption by 25%.

Balmer: See 'Rydberg Formula' def.

BDC: Bottom Dead Center, the lowest position of the piston.

Beta decay: Proton transformed into a neutron, or vice versa, inside an atomic nucleus.

BG: Brown's Gas, see def.

BOD: Board of Directors.

Bowser: Tanker.

Brown's Gas: Hydrogen, oxygen and other gaseous and energetic ingredients made FRESHLY from water by special electrolysis. The product of an Electrolyzer (see definition) MADE PROPERLY which is not to be stored but used right away. Named after Prof. Yull Brown (see definition) but also goes by many other names: Rhode's Gas, (named after it earlier researcher, Dr. William A. Rhodes), also called HHO (Hydrogen-Hydrogen-Oxygen), oxy-hydrogen, watergas or water gas, Water-Fuel or Waterfuel, etc. In Korea it's called Brown Gas. In China it's either HHO, Brown Gas or Brown's Gas. Its characteristics are described in Chapter 14 and other chapters of this book.

C-acid gas: carbonic acid gas otherwise known as carbon dioxide.

Carnot: Nicolas Léonard Sadi Carnot (1796-1832), often described as the "Father of Thermodynamics".

Catalyst: A material used to induce or enhance the chemical reaction between other materials without itself being changed or consumed in the process. In the context of this book, the catalyst is the dry material such as Baking Soda or KOH that is added to distilled water in order to induce the electrolysis process. The mixture of catalyst and water is defined as Electrolyte.

Cathode: The negative-charged electrode (wire, plate) in an Electrolyzer (HHO Generator) or battery. The electrode that gets the negative voltage. In an Electrolyzer this is where the hydrogen is being produced.

Cationic: An ion or group of ions having a positive charge and characteristically moving toward the negative electrode in electrolysis.

Cations: In electrolysis, a cation is an ion (or group of ions) that are positively charges and tens to move toward the Cathode – the negative electrode.

CBC: Capacitive Battery Charger.

CEIT: Combustion Enhancement Interface Technology (see def.)

Cell (also see 'HHO Generator'): One unit in an electrolysis system, as in 'Multi-Cell.'

CHEC: Canadian Hydrogen Energy Company (Bowmansville, Canada)

Chronal: something that pertains to time.

CI: (1) Compression Ignited. (2) Cubic Inch.

CIHT: Catalyst Induced Hydrino Transition – BlackLight's proprietary technology.

Clausius: Rudolf Julius Emanuel Clausius (1822–1888) was a German physicist and mathematician and is considered one of the central founders of the science of thermodynamics.

CO_2: Carbon Dioxide (gas). One of the worst emission gases – but also one of the easiest to reduce or completely eliminate with Waterfuel.

Colloidal: Finely divided particles, approximately 10 to 10,000 angstroms in size, dispersed in [liquid] in such a manner that prevents them from being filtered easily or settled rapidly.

Combustion Enhancement Interface Technology (CEIT): Coined by George Wiseman to define techniques to make the ECU recognize the added gases and adapt the air-fuel ratio accordingly. DIY techniques detailed at www.Eagle-Research.com and www.water4gas.com/support/

Concussion: Violent shaking.

COP: Coefficient of Performance (higher COP = lower operating costs)

CSP: Certified Safety Professional.

Current: In electricity, it is the movement of electrons through a conductor. Measured in Amperes. If for instance the conductor is copper then *electrons* are those particles of the copper atoms that leave their place and pass between adjacent copper atoms.

DC: Direct current. Electrical energy (electrical current, voltage) which does not alternate in polarity, in other words it keeps its positive and negative; and is also somewhat "stable," in other words it doesn't pulse. Even if it changes all the time, it could still be called DC if it has those characteristics.

DEE: Diethyl Ether.

Default: Absence.

Deleterious: Having a harmful effect; injurious.

Delphi: Delphi Corporation (Kent, UK)

DI: Direct Injection (engine).

Diatomic: Each molecule made up of two atoms.

Diesel: A type of engine named after its inventor, Rudolf Christian Karl Diesel (1858–1913). Since the word originated as a person's name, it should be capitalized. Diesel engines use thin oil fuel rather than gasoline fuel. Many (including this author) consider it to be the far superior type between common internal combustion engines.

DIY: Do It Yourself.

DOHC: (1) A chemical factor describing the concentration or ratio of one ingredient to the mix. (2) Double Overhead Camshaft http://en.wikipedia.org/wiki/DOHC

DOI (sometimes spelled d.o.i.): Digital Object Identifier – a character string ("digital ID") used to uniquely identify an object such as an electronic document.

DPMA: Deutsches Patent- und Markenamt (German Patent & Trademark Office)

Effected: brought into existence.

Efficiency: The ratio of total output power to input power expressed as a percentage.
A numerical expression of the ratio between waste and actual work done. For example, a low-efficiency car engine is one that uses most of its incoming fuel to produce heat, noise and vibration, rather than forward motion.

EFI: Electronic Fuel Injection. The modern science of wasting fuel (due to poor fuel atomization, see definition 'Atomize').

Electrode: A conductor (such as metal wire or plate) that dips into an electrolyte and allows the current (electrons) to flow to and from the electrolyte. We have 2 electrodes in each Electrolyzer: 'Anode' gets positive voltage and 'Cathode' gets negative voltage.

Electrolyzer: HHO Generator, Brown's Gas Generator. A device that splits chemical bonds by using electric current. Waterfuel uses *one type of Electrolyzer,* where WATER is being split into hydrogen and oxygen thus producing Brown's Gas or HHO (while other electrolyzer types are used in diverse technologies such as metallurgy and plating). Common misnomers for the WATERFUEL TYPE are 'hydrogen generator' and 'fuel cell.'
Find electrolyzers, kits and plans at www.Eagle-Research.com, eBay, www.Water4Gas.com, Amazon and private sites.

Electrolysis: When a direct current is passed through a liquid that contains ions (an electrolyte), chemical changes occur at the two electrodes; usually a separation of oxygen from hydrogen or other substances it is chemically bonded with. In the case of Waterfuel it's the process of splitting water into hydrogen and oxygen.

Electrolyte: A ***liquid*** solution of ***catalyst*** (see definition – that's the dry powder) ***in water*** inside an Electrolyzer (HHO Generator). Some users and even literature confuse between ***catalyst*** and ***electrolyte***. The ***catalyst*** in our case would be the chemical (such as Sodium) and the ***electrolyte*** would be the solution – the mixture of that chemical with distilled water.

ELTB: Equivalent Linear Two-Body
www.physics.purdue.edu/people/faculty/yekim/8_Equivalent_Linear_two_body.pdf

EM: Electromagnetism.

Emissions: For most exhaust gases, the simple yard stick is this: ***If it stinks – it's emissions – harmful emissions!*** Some emissions are "odorless" but that's a misleading concept because the body senses it one way or another. Sure, we have become somewhat numb to hostile emissions. If you ever smoked regularly and then you quit, you know how you become sensitive to the formerly "odorless" nicotine! Government-permissible emission levels are way too high for our health – because all harmful emissions are hostile to all life and should be objected! However, *not all emissions are harmful*; for example, the use of HHO in an engine, burner or welding machine creates emission of water vapor and extra oxygen. Even if HHO is accidentally emitted into the environment without burning, it reverts back to water.

Emulsion: Mixing liquids that wouldn't normally blend (for example: water+fat=milk).

Endergonic reaction (such as photosynthesis) is a reaction that requires energy to be driven (energy is absorbed by the process).

Endothermic: (Reaction or process) accompanied by or requiring the absorption of heat.

Energy effectiveness factor (Ee): Defined as a dimensionless **ratio** that enables the effectiveness of the conversion of energy from the depletable resource potential form to the final use form to be expressed.

Energy: The capacity to do mechanical (e.g. motion) or electrical work (e.g. light, sound).

Entropy: Measure of the level of disorder in a system. Specifically in Thermodynamics, it means the amount of **unavailable energy** in a system.

Environment Canada (ETV Canada): It's not the Canadian equivalent of the EPA but an organization that provides independent evaluations of new environmental technologies.

E-TEC II: http://en.wikipedia.org/wiki/E-TEC_II

ETVC: Environment Canada, see def.

Exergonic reaction (such as cellular respiration) is a reaction that loses energy during the process of the reaction.

Exothermic: (Reaction or process) that releases energy by light or heat.

Flash Steam: Steam formed from hot condensate when the pressure is reduced.

FP7: Framework Programme 7 – the Seventh Framework Programme of the European Union for the funding of research and technological development in Europe.

Free-Energy: Energy you don't have to pay anybody for. It's a common agreement between conventional scientists and "energy experts" that Free-Energy is physically impossible. They are right from their NARROW view of CLOSED SYSTEMS – however that classroom viewpoint is flawed for two reasons: (1) scientists and engineers CAN understand that in REAL NATURE there aren't any closed systems, therefore Free-Energy can be ***collected from other systems*** in the environment, e.g., sailboat, Earth Battery, solar, wind; and (2) a little child can understand that after a paid-for apparatus or method – however expensive – has covered its costs in cash and labor, it starts bringing you energy or ***extra energy*** that you don't have to pay for anymore, thus at the end of the day you're getting truly FREE ENERGY.

BEWARE OF IGNORANCE: 'FREE ENERGY' IS CONFUSED WITH "PERPETUAL MOTION" BY THOSE WHO ONLY THINK THEY UNDERSTAND PHYSICS, see Chapter 35 and Chapter 36.

All 'Free-Energy' methods and devices are based on this same basic principle – of becoming somewhat more efficient in extracting energy out of natural resources. Every rooftop in Israel has solar systems, invented in the early 1950's by Dr. Zvi Tavor and popularized shortly after. We pay for a solar system and from that moment onward the sun gives us tax-free energy; at first it's not free but the system quickly pays for itself in electricity savings, after which each household gets roughly $10,000 in FREE ENERGY before the system needs to be replaced. Israelis think with this principle, naturally and effortlessly. Photovoltaic system owners around the world are catching up quickly.

FRSC: Fellow of the Royal Society of Chemistry (UK, USA, Brazil, China, Germany, India and Japan).

Fuel cell: A device that produces electricity by using fuel (such as hydrogen) and a chemical that reacts with that fuel at two electrical terminals, thus producing electric energy that can be used to drive an electric car or do other useful work. Calling an HHO Generator "fuel cell" is obviously a misnomer – an HHO Generator TAKES electricity and (in our use) GIVES hydrogen, while a fuel cell (per definition) takes in hydrogen and out comes electricity! These are totally separate technologies. However, the HHO Generator can rightfully be called 'Waterfuel Cell' or WFC for short. Various 'Waterfuel cells' and free plans can be obtained from www.Water4Gas.com and www.Eagle-Research.com

It is noteworthy, though, that the use of 'fuel cell' to denote 'HHO Generator' snuck into the English language via official Patents that have used the term in that manner.

Fuel: Any substance (liquid, solid or gas) that releases its stored heat energy and turns it into actual heat and/or motion energy, when treated in a certain way such as by burning or by combustion in an engine. When fossil fuel is burned it is destroyed and leaves us with problematic pollutants. From the aspect of harmful by-products, Waterfuel is different because when it burns it reverts back to water vapor and oxygen that feeds back into the atmosphere.

Galvanic cell: A chemical-to-electrical cell such as a battery that cannot be recharged.

GCV: Gross Calorific Value (determines coal grade).

GEET: Global Environmental Energy Technology (in Hindu 'Geet' means melody or singing). This is a technology presented and taught by the late Paul Pantone, which is an add-on "Plasma Reactor" to any gasoline or Diesel engine allowing it to burn all sorts of "crazy" alternative fuels (coffee, cola, water/urine, waste oil, etc.) and attain remarkable efficiency. Its story and instructions can fill up books, and indeed books and courses have been written and are being distributed at http://geetinternational.com and products (see image) at www.hypnow.com and others.

Generator: A device that generates some sort of mechanical or electrical energy (what Americans call 'Genset') or generates a substance, as in 'hydrogen generator'. When mentioned in Waterfuel literature (as a word in itself, not in 'HHO Generator') we refer to stationary engines used to convert liquid fuel to other types of energy, usually electricity, compressed air or hydraulic power.

Gordian Knot: A legendary knot-puzzle from Gordium – a capital city in ancient Turkey – associated with Alexander the Great. "Cutting the Gordian knot" is often used as a metaphor for disentangling an intractable problem by a bold stroke.

Gouging: To pierce or perforate.

GRC: Glenn Research Center (of NASA).

GW: George Wiseman.

HCCI: Homogeneous Charge Compression Ignition, a form of internal combustion that combines the advantages of gasoline and Diesel; a well-mixed fuel and oxidizer (typically air) are compressed to the point of auto-ignition. As in other forms of combustion, this exothermic reaction releases energy that can be transformed in an engine into work and heat.

HHO Generator: Electrolyzer (see definition) or Waterfuel Cell (WFC). A device that splits water into hydrogen and oxygen thus producing Brown's Gas or HHO. Common misnomers are 'hydrogen generator' and 'fuel cell.'

HHO: Hydrogen+Hydrogen+Oxygen with the basic structure shown (H_4O_2). The product of splitting water (H_2O) into its components; being gaseous but not steam, it's a substance that can only be described as "water in the forth state." Also named Brown's Gas (see definition), Rhode's Gas, OxyHydrogen or oxy-hydrogen, watergas or water gas, or Waterfuel, to mention a few. This is a simplified diagram because there's much more about this gas in the science chapters. →

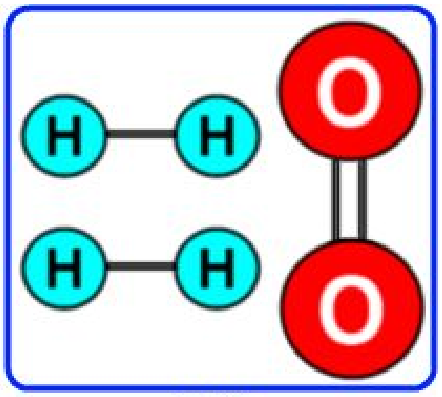

HHO

HNG: Hydro Nano Gas, another name for Brown's Gas.

HO: heavy oil (dense hydrocarbons derived from petroleum, coal tar, etc.)

Hydrogel: A thick gel that holds many times its weight in trapped water. It has a number of medical and industrial applications.

Hydrogen: The lightest and most abundant element. A gaseous diatomic element (in simple words: gas that always has particles in pairs). This simple atom consists of one proton and one electron. ***HHO / Brown's Gas is not hydrogen!*** HHO when generated and used properly is more potent, more economical, more environment-friendly and much safer than hydrogen. A recent study performed in the University of Windsor, Canada (www.sciencedirect.com/science/article/pii/S0360319900000689) proved that HHO is twice as potent as hydrogen for assisting combustion. And even when oxygen is added to hydrogen from a bottle the combined gas mix wins hands down over hydrogen; note that such mix is not HHO/Brown's Gas – find the differences in various chapters.

Hydrolysis: Decomposition reaction where one reactant is water; signifies the decomposition of a substance by the combination of one of its elements with one of those in water.

Hydrophilic: Having an affinity for water; readily absorbing or dissolving in water.

Hydroset: Hydraulic pump (rare use in English).

I4: Straight-4 http://en.wikipedia.org/wiki/Straight-4

In situ: Situated in its original, natural, or existing place (from Latin: in position).

Incipient: just starting to be or happen; beginning.

Incredulity: A feeling that you don't or can't believe/accept that something is true or real.

Insolate (verb): to dry in, or expose to, the sun's rays; to ripen or prepare by such exposure.

Institut für Energietechnik, Laboratorium für Aerothermochemie und Verbrennungssysteme (German): The Aerothermochemistry and Combustion Systems Laboratory. It is part of the Department of Mechanical and Process Engineering at ETH (Swiss Federal Institute of Technology) in Zürich, Switzerland. Headed by Professor Konstantinos Boulouchos.

Jet impeller: A rotor used to increase (or decrease in case of turbines) the pressure and flow of a fluid or gas.

Jinni (or Genie): In Islamic Mythology, a spirit able to supernaturally influence mankind.

JLN: Jean-Louis Naudin: www.jlnlabs.com

Kasbah: Small Islamic town.

kgf: Kilogram-force (or kilopond) is a gravitational metric unit of force.

KOH: Potassium hydroxide, or "caustic potash" is a popular catalyst (see definition).

Kook: Eccentric/strange/foolish/insane.

Lean (mixture): Less fuel and more air in the air/fuel mixture fed into an internal combustion engine OR burner/furnace. In accordance with common wisdom of automakers, the mixture must be 14.7 parts air to 1 part gasoline. But with supplemental HHO/hydrogen it can be significantly leaner, as verified by NASA experiments in the early 1970's and many others. Also see 'Stoichiometric' definition.

LPG: Low Pressure Gas (fuel).

LPM: Liters Per Minute.

LPH: Liters per hour.

Lyman: See 'Rydberg Formula' def.

MASER: Microwave Amplification by Stimulation Emission of Radiation. Read more: https://einstein.stanford.edu/content/faqs/maser.html

Maxwell: James Clerk Maxwell (1831–1879) was a Scottish mathematical physicist. His most prominent achievement was to formulate a set of equations that describe electricity, magnetism, and optics as manifestations of the same phenomenon, namely the electromagnetic field.

Mesoscopic: On a scale between microscopic and macroscopic.

MHD: Magneto Hydro Dynamic.

Mixture: We use this term to describe the mixture of air and fuel, in either a carburetor or fuel injection system of an internal combustion engine, burner or furnace. Usage: 'lean mixture' means 'high ratio of air to fuel' (lots of air, little fuel) vs. 'rich mixture' (lots of fuel, less air); since air is free and non-taxable, we all want the former.

Depending on engine type ***the mixture can be as lean as 65:1*** – putting 14.7:1 to shame. **Water4Gas** books and DVD teach SIMPLE methods to boost fuel economy by leaning the "stoichiometric" values of air-fuel mixtures. And no, it doesn't break the engine.

Mole (of water) = 18 gram

Molecule: Compound of two or more atoms, the smallest independent unit of chemical compounds.

Monatomic: An element consisting of a single atom, see 'mono-atomic'.

Mono-atomic: Singular atoms not paired up, opposed to "di-atomic" (paired up) hydrogen or di-atomic oxygen, which is the usual way we find them in nature and industry.

MPa: Megapascal, approximately 1 Atm.

MPG: Miles Per Gallon. The common expression of fuel economy in North America, the higher the better. In the metric system it would be expressed in Kilometers Per Liter (KPL) and in this case, the lower the better. Some use Miles Per Liter, which gets really confusing for everybody else.

MSFC: Marshall Space Flight Center (of NASA).

MSW: Municipal Solid Waste (MSWI: Municipal Solid Waste Incinerator).

NANOR™: A small LENR device by Nanortech, Inc. (formerly JET Energy) developed by MIT Professor Peter Hagelstein and Dr. Mitchell Swartz.

Ni/H: Reaction between Nickel and Hydrogen (in the water) under special conditions.

Nitrometer: An apparatus for measuring the amount of nitrogen (or nitrogen compounds) in a substance or mixture.

Non sequitur (Latin): literally it says "does not follow" and it means non-logical or "doesn't add up."

NOx (Nitrogen Oxide, NO_x): Gases consisting of one molecule of nitrogen and varying numbers of oxygen molecules. Nitrogen oxides are produced in the emissions of vehicle exhausts and from power stations. In the atmosphere, nitrogen oxides can contribute to the formation of photochemical ozone (smog), can impair visibility, and have health consequences; they are considered pollutants.

NRL: US Naval Research Laboratory www.nrl.navy.mil

O_2: Oxygen. The 'O' obviously stands for Oxygen, while the added '2' means that's it usually di-atomic, meaning that in the atmosphere the oxygen atoms pair up.

O&M: Operations and Maintenance

OPEC: Organization of the Petroleum Exporting Countries. In other words: the oil cartel.

Orthohydrogen vs. **parahydrogen:** In 1929, German and Austrian chemists Karl Friedrich Bonhoeffer and Paul Harteck showed that ordinary hydrogen is a mixture of two kinds of molecules, ***ortho***-hydrogen and ***para***-hydrogen. The word "ortho" means straight or upright, and the word "para" means beyond, behind or beside. Encyclopedia Britannica further explains that in ***ortho***-hydrogen, the spins of both its protons (the two particles comprising the core of the Hydrogen atom) are aligned in the same direction – that is, they are parallel. In ***para***-hydrogen, the spins are aligned in opposite directions and are therefore anti-parallel. At room temperature and thermal equilibrium (symmetric temperature with free passage of heat between the elements), hydrogen consists of approximately 75% ***ortho***-hydrogen and 25% para-hydrogen.

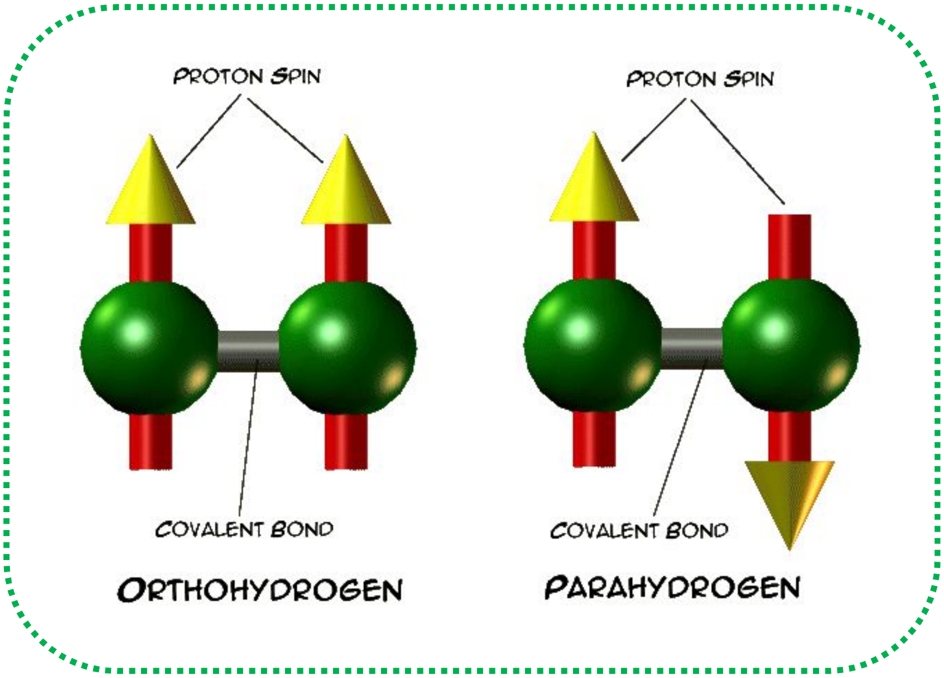

This relationship of spin alignments determines the magnetic properties of the atoms. In the context of Waterfuel: it affects on THE ABILITY OF THE ORTHO-HYDROGEN ATOM TO INTERACT BETTER WITH FOSSIL FUEL OR BIO-FUEL. ***Ortho***-hydrogen clusters together with Oxygen and research found that it can gain up to three times more power over regular HHO.

Further study: http://thermophysics.ru/pdf_doc/EOS_H2_new.pdf which is an extensive study on this subject, titled *"Fundamental Equations of State for Parahydrogen, Normal Hydrogen, and Orthohydrogen."* It was researched and prepared by J.W. Leachman, R.T. Jacobsen and S.G. Penoncello from the University of Idaho, as well as E.W. Lemmon from the National Institute of Standards and Technology (USA).

Oscillogram: Oscilloscope's screenshot.

Oscillograms: Images of waveforms registered on an oscilloscope.

Oscillograph: Oscilloscope.

Outbirth: Creation or bringing into view.

Oxygen: A non-metallic gaseous element that makes up about 20% of the atmosphere (20.95% by volume, 23.2% by weight). The sign $\mathbf{O_2}$ means a bond of 2 oxygen atoms.

P.E.: Professional Engineer; see http://www.nspe.org/resources/licensure/what-pe

Paradigm: Usually defined as model, ideal, mold, form, example, pattern; but in other words, it could be defined as 'school of thought.'

Parahydrogen: See definition "Orthohydrogen vs. parahydrogen" above.

Paschen: See 'Rydberg Formula' def.

PCV: Positive Crankcase Ventilation, a system using a PCV valve to evacuate '*blow-by gases'* (gases that skip past the piston rings in an engine) and moisture from the crankcase of an internal combustion engine. Well, that's the official definition. In fact, blow-by gases are a whole lot of junk: burnt and un-burnt fuel and oil escaping from the cylinder, past the piston rings and piston during a piston's power stroke (much more if you have worn-out rings or cracked pistons), and into the crankcase. These by-products of combustion form acid and sludge in the crankcase and cause smoke and oil deterioration. Naturally they damage mileage when the PCV system re-circulates this junk back into the intake manifold – the breathing part of the engine. The air entering the engine should NOT have sludge in it! Engines need clean air to work properly – and this is where the PCV Enhancer comes handy (free plans: www.Water4Gas.com)

Pd/D2O: Palladium electrode in "heavy water" or "heavy hydrogen" (deuterium oxide D_2O).

PEM: Proton Exchange Membrane.

Pentoxide: Vanadium oxide (V_2O_5).

Peri (Greek): "About, around"; the phrase "pericathode space" therefore means the space around the cathode.

Photodissociation (also called Photolysis or Photodecomposition): A chemical reaction in which a chemical compound is broken down by photons.

Pintle: Pin or bolt.

Plasma: Electrically neutral, highly ionized phase of matter composed of ions, electrons, and neutral particles. It is distinct from solids, liquids, and gases.

Plasmatron: Fuel reformer in which an electrical discharge is used to convert hydrocarbon fuels (liquid or natural gas) into hydrogen and CO.

PM: Popular Mechanics (magazine).

Polytetrafluoroethylene: Known as Teflon®

Pregl: Used to be the conventional type of micro-nitrometer (see def.), named after chemist and physician Fritz Pregl (1869-1930).

Prigogine: Ilya Romanovich Prigogine (1917–2003) was a Belgian-Jewish physical chemist and Nobel Laureate. Best known for his definition of dissipative structures and their role in thermodynamic systems far from equilibrium, a discovery that won him the Nobel Prize in Chemistry in 1977. In summary, Ilya Prigogine discovered that importation and dissipation of energy into chemical systems could reverse the maximization of entropy rule imposed by the second law of thermodynamics. Isabelle Stengers (1949--) is a Belgian philosopher who has co-authored several books with Prigogine, including 'Order out of Chaos.'

PSA: Pressure Swing Adsorption.

PVT: Pressure-Volume-Temperature relationships.

Pyrolysis: Thermochemical decomposition of organic material at elevated temperatures in the absence of oxygen. Derived from the Greek: pyro "fire" + lysis "separating".

Ragone plot: Chart used for performance comparison of various energy storing devices.

Ranque-Hilsch: Relates to Vortex Tube:

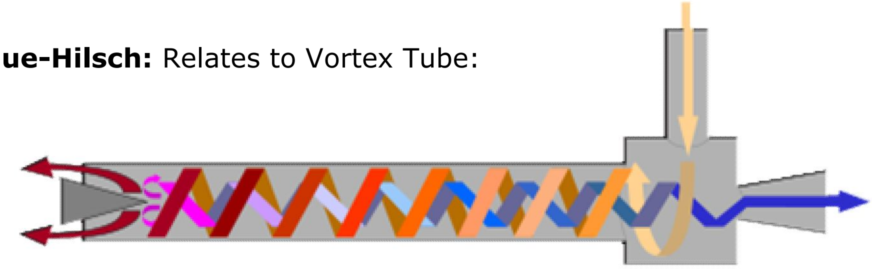

RFI: Radio-Frequency Interference

Rotameter: Type of flow meter

Rich (mixture): More fuel and less air in the air/fuel mixture. In accordance with common wisdom of automakers, the mixture should be ideal at 14.7 parts air to 1 part liquid fuel. But that's too rich – with supplemental HHO it should be significantly leaner! Also see 'Stoichiometric' definition.

RSO: Rubber Seed Oil.

RSOME: Rubber Seed Oil Methyl Ester.

SAE: Society of Automotive Engineers.

Scavenging: In automotive usage, scavenging is the process of pushing exhausted gas-charge out of the cylinder and drawing in a fresh draught of air or fuel/air mixture for the next cycle. This process is essential in having a smooth-running internal combustion engine.

SI: Spark-ignited (engine).

Sintering: Compacting by heat without liquefaction.

Spacial (also: Spatial): from the word 'space' – something that has to do with space.

STMicroelectronics: Leading manufacturer of semiconductors.

Stoichiometric: It's one of those "big words" that fly over your head. You may have seen it said about air-fuel ratio, and automotive experts always say the **Stoichiometric** value is 14.7-to-1 for air-gasoline mixture or 14.6-to-1 for air-Diesel fuel mixture. These numbers sound very finite, don't they? I mean, not a wink in any direction, no range, nothing. A finite number. The English dictionary says **Stoichiometric** means "having its component elements present in the exact proportions indicated by its formula."
I haven't used this word in my chapters. I never do. And that's because I think it's a pompous make-believe term that was made to impress upon you that air-fuel ratios are very calculated, very scientific and absolutely finite. They're not. NASA published as early as 1974 that this ratio can be extended (more air, less fuel) by adding SMALL amounts of hydrogen to intake air! I forced my Toyota engine to go much higher (leaner) than 14.7 (maybe 20-25) and many others have done the same. Official numbers are arbitrary, to say it gently. In more harsh words, I strongly believe the term **Stoichiometric** is a hoax – or gross error at the very least – when referred to internal combustion engines air-fuel ratios. In open-air burners (heaters, cooking, furnace) and turbines, where the fuel is either liquid fuel or natural gas, the story should be similar and the proper type of Waterfuel can help lean the mixture. Read George Wiseman's article 'The 14.7: Air:Fuel MIXTURE LIE' in Chapter 19.

Storm in a teacup (British & Australian idiom): a situation where people get very angry or worried about something that is not important.

STP: Standard Temperature and Pressure.

Stripchart: A plotter that produces one-dimensional scatter plots (or dot plots) of the given data.

STUXNET: famous virus that found its way into Iranian atomic facilities.

Sublimate: To change directly from solid to vapor without first melting.

Sun Tzu: Chinese general, military strategist and philosopher who wrote 'The Art of War'.

Superfluous: wasteful, over the top; not really necessary.

SVO: Straight (undiluted, untreated) Veggie Oil.

Tailing ponds: areas of refused mining tailings where the waterborne refuse material is pumped into a pond to allow the sedimentation (meaning separation) of solids from the water. The pond is generally impounded with a dam, and known as tailings impoundments or tailings dams.

TCO: Total Cost of Ownership

Tetrahedron: a polyhedron with four faces.

Transmutation: Conversion of one chemical element or isotope into another.

Tucker: In 1948, Preston Tucker created 51 advanced automobiles that were too competitive for the big automakers. Watch the 1988 movie 'Tucker: The Man and His Dream' that was made by Francis Ford Coppola and George Lucas, both proud owners of original Tucker 48 cars.

Ur- originally a German prefix meaning "original or primitive."

USPTO: US Patent & Trademark Office.

Vaporization: The physical change of going from solid or liquid into a gaseous state. Also see 'Atomize'.

VDC: Volts Direct Current.

Vitrification (from Latin vitreum, "glass" via French vitrifier): Transformation of a substance into a glass, i.e., a non-crystalline amorphous solid. In the production of ceramics, vitrification is responsible for its impermeability to water.

Vituperative: full of harsh abusive criticism.

Voltage: Measure of electrical tension – or "pressure" if you were to compare it to water flow physics. The measurement unit is **Volt,** named after the Italian physicist Count Alessandro Giuseppe Antonio Anastasio Volta (1745–1827).

Vorticular: Having the motion characteristics of vortex.

VTOL: Vertical Take-Off and Landing.

WAM: Waterfuel-Assisted Microturbine.

Wanna Cry: Ransomware that hit the world in May 2017 – Google for details.

Water Gas, Watergas, Water-Fuel or **Waterfuel**: Commonly refers to Brown's Gas or similar gas from water. However, this book describes multiple methods for using water/vapor/steam/mist directly used in an engine, flame or even a purely mechanical system to enhance economy and ecology.

Watt(s): A measurement unit of electrical power; not potential power (voltage) but actual work done. To find the "wattage" or in simpler words electrical Power, multiply Volts by Amps (Amperes, units of current; how many electrons flow in a given unit of time). Named after Scottish engineer and inventor James Watt (1736-1819).

Waveguides: Pipes that convey electromagnetic waves. They are to electromagnetism as are copper wires to electricity.

WCBSFC: Weighted Corrected Brake-Specific Fuel Consumption.

WFC or **Waterfuel Cell:** Common name for HHO Generator or Electrolyzer (see def.)

WWV: A shortwave radio station in Colorado, USA, that broadcasts accurate time from NIST (National Institute of Standards and Technology, an agency of the U.S. Department of Commerce).

Yull Brown: Professor Yull Brown (1922-1998) has become famous for researching, experimenting, patenting and teaching his knowledge on what we now call Brown's Gas. Born in Bulgaria as Ilya Velbov. Trained as electrical engineer, moved to Australia in 1958 and worked as a laboratory technician. Later in 1973-1974 he filed for his first electrolysis Patents in Australia.

Yull Brown spent many years demonstrating the viability of his technology and convincing others of its commercial value: how to use Brown's Gas for welding, how to reduce nuclear and toxic waste to harmless carbon, how to fuel a vehicle, etc.

William Rhodes claims that his work precedes Brown's and it's true; the reason Brown is in this Glossary is that the term "Brown's Gas" has become very prominent regardless of historical facts. ***Rhodes's name belongs in Waterfuel's Hall of Fame just the same.***

Zero Point Energy (ZPE): If you took ALL of the particles from an area and created a complete vacuum – totally empty space – and then you cooled that space to -273.15°C, and you got rid of all light and infrared radiation, you would still have detectable energy in there – and that's the "vacuum energy"; these are the energy fields which are present in the vacuum at its "zero point" state.

BEWARE OF IGNORANCE: ZPE IS CONFUSED WITH "PERPETUAL MOTION" BY THOSE WHO DO **NOT** UNDERSTAND PHYSICS!

Can ZPE be extracted from the vacuum in useful ways? The US Patent thinks so, as evident in multiple Patents that specifically describe various ways for doing that. Search the above terms in the Patent Office database(s) to find these Patents and others:

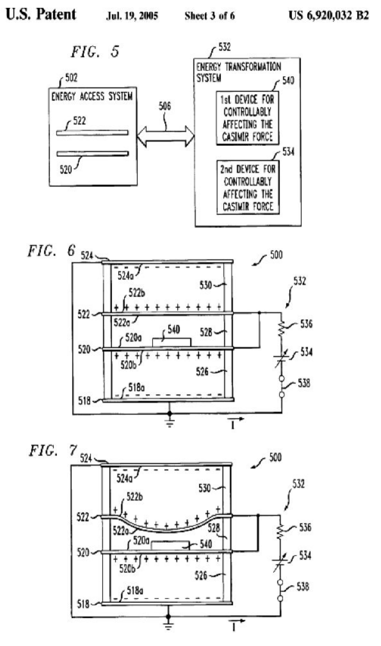

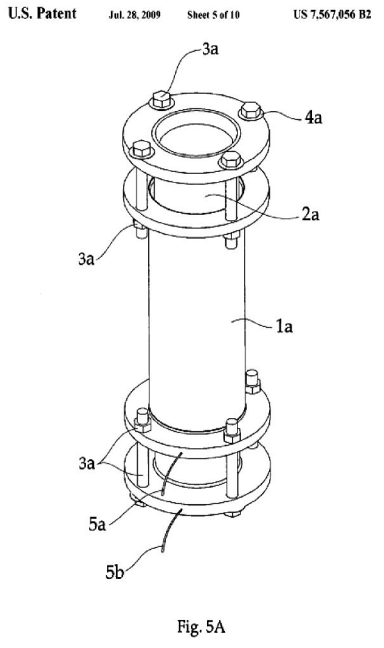

Fig. 5A

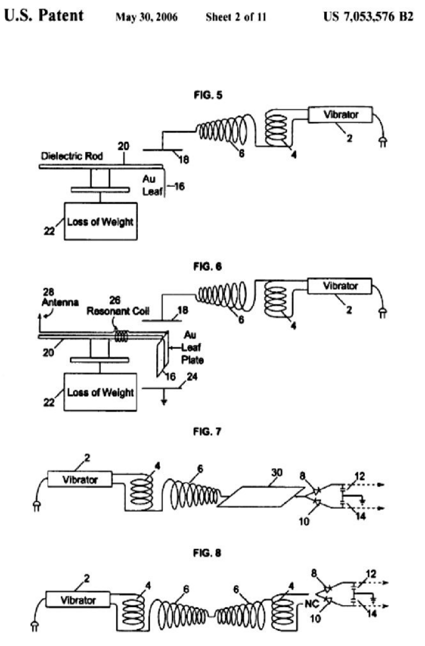

There is a fast growing agreement between scientists, inventors and energy system developers, that neither **'Zero Point Energy'** nor **'EXTRACTING Zero Point Energy FOR USEFUL WORK'** is pseudoscience. IMPORTANT NOTE: not all Waterfuel is ZPE – some technologies and related devices use it (whether the scientist or experimenter is aware of its contribution or not) and some are not using ZPE. Well, at least as far as we understand at this time. Because, with water being grossly unknown yet (as you see in 0), surprising discoveries are sure to come in the near future.

Rydberg Formula (for hydrogen): Formulated by Swedish physicist Johannes Rydberg (1854–1919), the Rydberg formula is used in atomic physics to describe the wavelengths of spectral lines of many chemical elements. Specifically, the emission spectrum of atomic hydrogen is divided into a number of spectral series (see chart and table below), with wavelengths given by the Rydberg formula:

$$\frac{1}{\lambda_{\mathrm{vac}}} = R\left(\frac{1}{n_1^2} - \frac{1}{n_2^2}\right)$$

Where

- λ_{vac} is the wavelength of electromagnetic radiation emitted in vacuum,
- R is the Rydberg constant, approximately 1.097 x 10^7 m^{-1},
- n_1 and n_2 are integers greater than or equal to 1 such that $n_1 < n_2$, corresponding to the principal quantum numbers of the orbitals occupied before and after the 'quantum leap'.

By setting n_1 to 1 and letting n_2 run from 2 to infinity, the spectral lines known as the Lyman series converging to 91 nm are obtained, in the same manner:

n_1	n_2	Name	Converge toward
1	2 → ∞	Lyman series	91.13 nm (UV)
2	3 → ∞	Balmer series	364.51 nm (Visible)
3	4 → ∞	Paschen series	820.14 nm (IR)
4	5 → ∞	Brackett series	1458.03 nm (Far IR)
5	6 → ∞	Pfund series	2278.17 nm (Far IR)
6	7 → ∞	Humphreys series	3280.56 nm (Far IR)

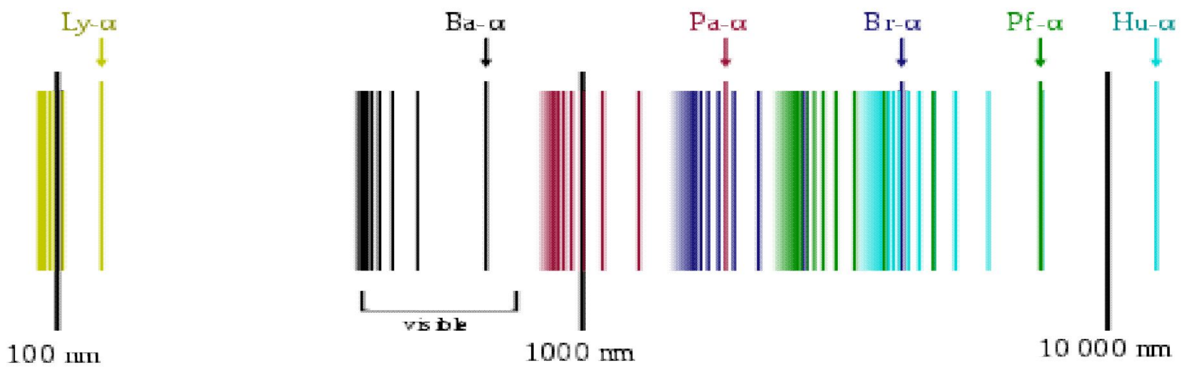

The spectral series of hydrogen, on a logarithmic scale

Other Physics and Energy-Related Glossaries

- www.physicsoftheuniverse.com/glossary.html
- www.physicsphenomena.com/Physicsdictionary.htm
- https://energy.gov/eere/energybasics/articles/glossary-energy-related-terms
- https://www.lhup.edu/~dsimanek/glossary.htm
- http://tutor4physics.com/glossary.htm

ENERGY INDUSTRY

- http://101science.com/chemistry_terms.htm
- www.eia.gov/tools/glossary/ (acronyms: www.energy.ca.gov/glossary/acronyms.html)

CHEMISTRY

- https://www.thoughtco.com/chemistry-terms-starting-with-letter-a-604486
- https://www.hach.com/chemGlossary
- http://101science.com/chemistry_terms.htm

Chapter 40.
Resources and Products

General: www.knowledgepublications.com and www.Hydrogen-On-Demand.com (http://HODinfo.com/)

Eagle Research

George Wiseman has a wealth of information on Brown's Gas (he's THE world expert on that) as well as books, kits and videos on Free-Energy and Waterfuel – including how to use Brown's Gas for health! Visit www.Eagle-Research.com for a wealth of information.

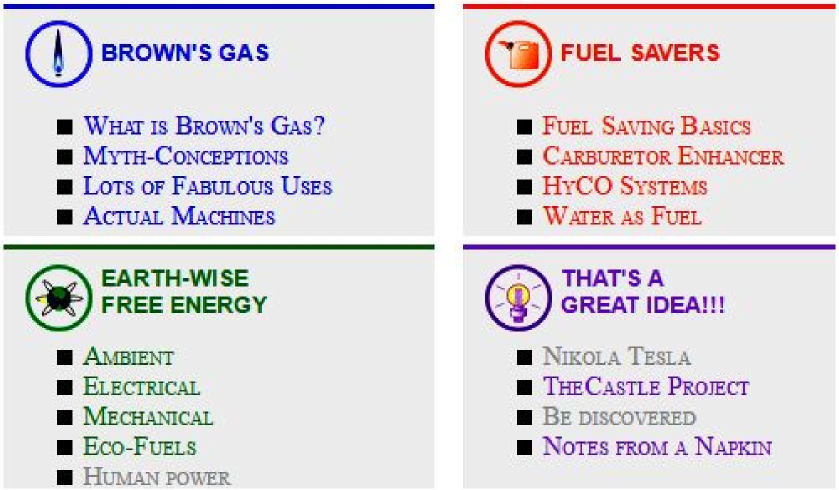

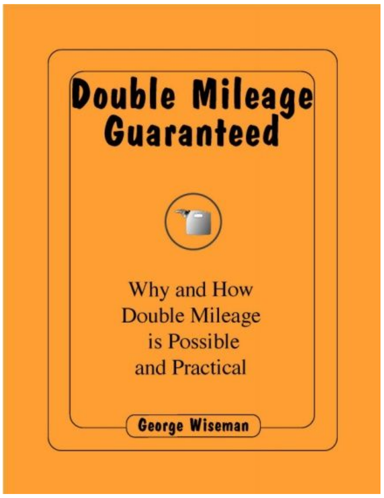
Double Mileage Guaranteed

Why and How
Double Mileage
is Possible
and Practical

George Wiseman

eBook "A Practical Guide to Free-Energy Devices"

- Author: Patrick J. Kelly
- Published: regularly updated and expanded (3298 pages in May 12, 2017)
- Free Download: http://www.free-energy-info.co.uk/PJKbook.pdf
- MORE: In the eBook itself Kelly states that it contains only about 5% of the information on the website with the same name: http://www.free-energy-info.tuks.nl or http://www.free-energy-info.co.uk/

Panacea BOCAF ('Building Our Children A Future')

- A non-profit operation out of Brisbane, Australia, dedicated to open-source projects on free energy and sustainability.
- Direct link: http://www.panacea-bocaf.org/
- Waterfuel devices: www.panaceatech.org/Hydroxy%20Boosters.pdf
- It contains links to many similar projects and like-minded activists.

KeelyNet

Named after acoustics researcher John Worrell Keely, www.keelynet.com is an enormous BBS (Bulletin Board System) with articles, plans and images dedicated to Free-Energy, anti-gravity and health technologies. Founded by Robert A. Nelson and Jerry Decker, and sponsored by Vanguard Sciences www.vanguardsciences.biz

"Gallery of Clean Energy Inventions"

- Author: Gary Vesperman, http://www.padrak.com/vesperman/
- 233-page PDF download: https://app.box.com/v/cleanenergyexhibit

Popular DIY Products

These are not "hobby" items but professionally made products for all backyard mechanics.

DIY: www.Eagle-Research.com – in the 'Store' section George Wiseman offers his famous HyZor kits (see photo), electronic enhancers, manuals and much more.

DIY: www.AdvancedHHO.com – various modern kits for vehicles are sold here. High quality, successful installations.

DIY: www.Fuelsaver-MPG.com offers good systems and the owner, Mike Kehrli has developed and now offers the very best electronic enhancers in the market today; it's worth visiting regularly as Mike adds products to fit the computers of newer automotive models.

DIY free info: A decade ago www.water4gas.com offered DIY eBooks for sale. Now the fully updated books are FREE TO DOWNLOAD. The website has been redesigned like a modern and vibrant magazine with articles on Waterfuel news, products from independent vendors and more. Please note that **Water4Gas** is now a charity operation that does not sell any products or services.

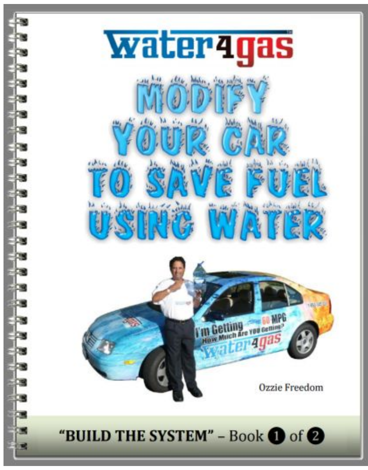

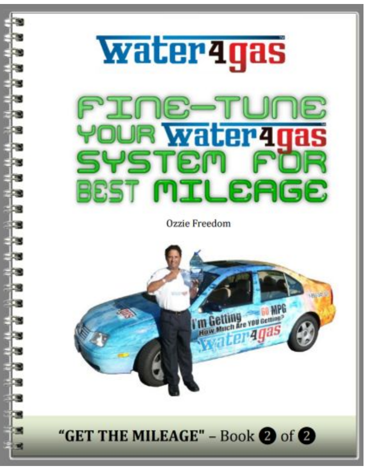

Water4Gas.com was and still is DIY. Even if you don't make the products with your own hands, it's still a do-it-yourself installation and experimenting. But if you need products and services for your factory, engine service business, marine fleet, workshop (welding), etc., see 'Industrial Products & Know-How' below.

The Best Waterfuel DVD Set Ever Made Offers Free Know-How for: (1) Backyard Experimenters, (2) Your Business, and (3) Teaching Class

DIY: THE DVD SET IS A GOOD STARTING POINT FOR EXPERIMENTING WITH WATERFUEL (AND CHECKING IF IT'S THE RIGHT BUSINESS FOR YOU) WHICH IS MOSTLY APPLICABLE TO VEHICLES AND SMALL GENERATORS BUT ALSO COVERS THE IMPORTANT PRINCIPLES OF WATERFUEL.

With the **Water4Gas** DVDs you will be able to sit in the comfort of your living room and ACTUALLY SEE Ozzie showing you every little detail that his **Water4Gas** books cannot contain. The set includes seven full-length DVDs, each with 80-90 minutes each – thus providing you with approximately 600 minutes jam-packed with clear visual information and how-to's. There are also three extra CDs (full part lists, troubleshooter and bonus watercar plans) that make a total of ten discs.

Discover the simple principles on how to make combustible gas from water safely and inexpensively. How to build a simple, inexpensive **Water4Gas** system for as little as $15 a unit and $53 for a complete **Water4Gas** system.
No big science - just sheer simplicity!

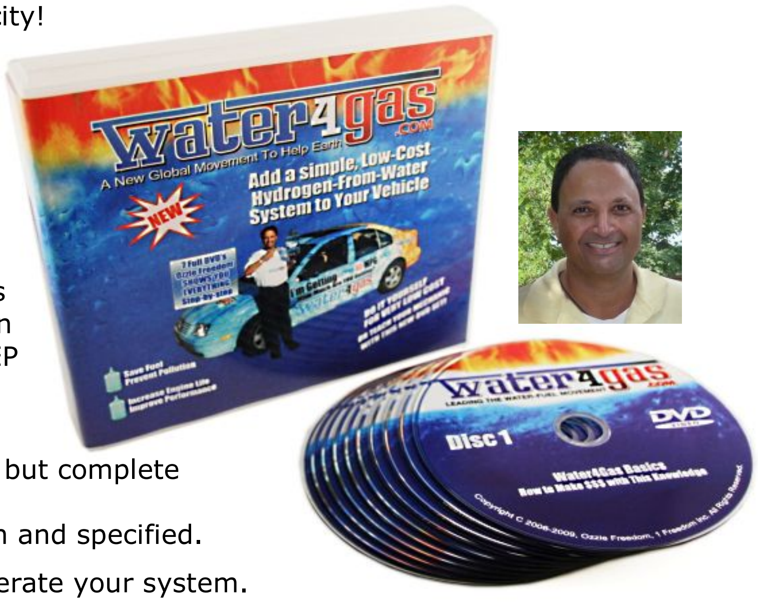

- Easy to follow instructions with diagrams, all the necessary tools, and along with COMPLETE part lists that small business owners use nowadays to manufacture **Water4Gas** for profit (the manufacturing information is complete and royalty-free, in other words YOU GET TO KEEP YOUR PROFITS IN FULL).
- FOLLOW OZZIE'S HANDS as he builds every part of this simple but complete system before your very eyes – every little part is shown and specified.
- You learn how to install and operate your system.
- Learn how to maintain and troubleshoot your system.
- You learn **Water4Gas** special techniques to MAXIMIZE YOUR FUEL ECONOMY.
- How to fine-tune several unique enhancers for best efficiency. You will be able to MAKE and FINE TUNE these enhancers. You will understand HOW they save fuel and be able to educate others that it's no miracle.
- Revolutionary fuel additives you can make at home/garage.
- Driving techniques, vehicle maintenance, and much more. Basically everything you need to save money using **Water4Gas**.
- The valuable knowledge and insight from these DVDs give you an opportunity to get involved in the **Water4Gas** Global Movement.

Are you thinking of **Water4Gas** as a possible business opportunity? This DVD Set gives you the information you need to start a business for yourself as a manufacturer, vendor, installer and mileage tuner **which is where users need the most help.** If you're training students or employees, just let them watch!

Teaching classes? This is an excellent tool to teach your students without sweat – just turn on the projector or screen and let your students learn from the most practical DVD in the field of Free-Energy. Showing these DVDs in public – any size public – will not violate our copyrights so go ahead and educate your entire city!

NOTE: I authored the DVDs but they are manufactured by DVD factory to make them playable on standard player/computer. Find at www.Water4Gas.com, contact me if you want to make/sell them. Also seeking JV to convert to online video courses. ~Ozzie

Water Structurizers

Independent water and Waterfuel researcher Jason → Verbelli explains the importance of water structuring in his excellent lecture: https://youtu.be/BRex364_Yv8
Also visit his YouTube channel 'TheRealVerbz'
and Facebook page www.facebook.com/verbelli

Regarding the influence of water structuring on fuel qualities, see "More on Water Clustering", page 19. Structurizers are sold and/or presented at:

- http://presidentwater.com
- www.**IdealEarthWater**.com
- www.**Grander**.com
- http://aetherforce.com/water-structurizers-by-jason-verbelli/

INDUSTRIAL PRODUCTS & KNOW-HOW

WaterfuelPro Limited was established for the purpose of propelling the Waterfuel industry to new heights. Its goal is to 37X the Waterfuel industry by advancing the tech & marketplace to top industry standards on safety, reliability and ecology. Its second goal is to ***TRAIN PROFESSIONALS*** – Waterfuel engineers, installers, technicians, entrepreneurs. Inventors and developers are welcome too! For the latest offers and news visit www.WaterfuelPro.com

Chapter 41.

"The Snowball Plan to 37X The Waterfuel Industry"

By Ozzie Freedom

DISCLAIMER: Like the rest of this book, the information and content contained in this chapter do not constitute a recommendation or solicitation to purchase, sell or create any security, or to make any type of investment or financial decision. Additionally, said information and content do not constitute advice on issues of legality, tax, accounting or suitability / profitability of any transaction, investment, deal or partnership. The market / marketing / planning / management commentaries represent my own opinions based on my own assessment of market environments as I am reading them at the moment of writing and are not intended to be a forecast of future events, or any type of guarantee of financial, professional or individual results. Images are provided for illustrational purposes only and do not represent actual projects or clients unless otherwise stated. Also, this information and content are provided as-is and I keep the right to change my mind any minute because new information, statistics and tech / market reviews keep coming in all the time; therefore I urge you to do your own study on each and every part of this chapter. No part of this book is to be taken as a proposed business plan, as a whole or any part thereof. You know your skill set, your business environment and your country better than I ever will, so do your homework and be responsible for your decisions. IF YOU DISLIKE THIS STATEMENT, PLEASE STOP READING, CLOSE THE BOOK AND WALK AWAY.

<u>Some of the subjects covered in this chapter</u> **<u>Page</u>**

Why "snowball"? Because, like a snowball accumulating more snow down the mountain and becoming an unstoppable avalanche, exposing this plan creates a snowball effect by spilling the beans on all the (pretended) secrets of the Waterfuel industry AND showing the exact way to snowball every part of the industry.

Why "37X"? The vision is to multiply by 37 the sales/service volume of existing industry as well as expand into all its 37 professional niches AND 37 applications listed earlier. Also, preliminary estimations detailed here indicate that we may be sitting on a $37 trillion annual business potential. However, 1000X would be more realistic as you will realize.

Waterfuel's 10 Biggest Secrets

1. THERE IS NO BIG SECRET just many pretended secrets – more than enough has been TRULY AND FULLY EXPOSED to put the show on the road, serve billions of people and earn accordingly!

2. The tech that's most EFFECTIVE, VALIDATED and EASY TO DUPLICATE in dozens of PROFITABLE ways is HHO/Brown's Gas.

3. THIS TECHNOLOGY IS 101 YEARS OLD. And known to all big governments so there's no point in "exposing" it to them.

4. The Patents, those that really matter, are 40 and 50 years old, from Yull Brown and William Rhodes, respectively. George Wiseman has shared vital safety/tech upgrades (given below). Hence, THE ESSENTIAL TECHNOLOGY IS PRACTICALLY PUBLIC DOMAIN.

5. Patents and technology are provided/explained in this book and the download links, FREE TO BE EXAMINED AND USED BY ANYONE AND HIS SISTER.

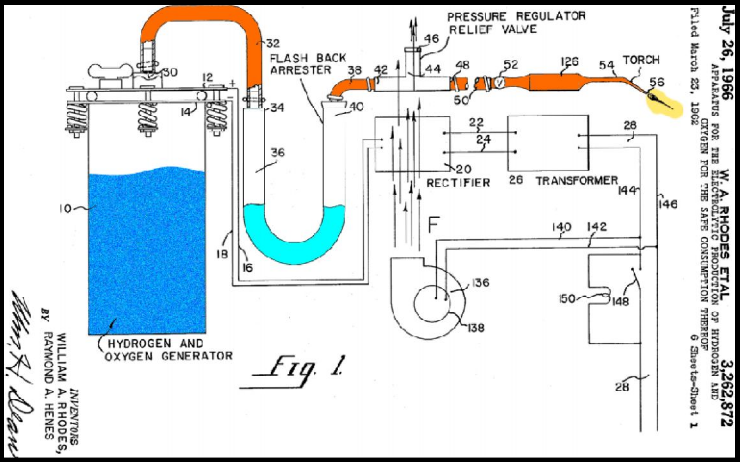

6. TIMING couldn't be more PERFECT than RIGHT NOW.

7. Brown's Gas has several proven AND widely published <u>POSITIVE EFFECTS</u> on the HUMAN BODY.

8. There are SO MANY VALIDATIONS by so many scientists and universities that it is now becoming a science trend, the thing to do – testing and revealing the benefits of Waterfuel, and especially HHO/Brown's Gas, to the economy and our environment.

9. NEW LOW-COST TOOLS HELP YOU SHOW OTHERS that those who oppose Waterfuel simply understand neither physics nor the shameful inefficiency of "modern" engines and fossil-based energy.

10. COMPETITION IS AN ABSOLUTELY RIDICULOUS NOTION AS THERE ARE ESTIMATED $37 TRILLION TO BE EARNED ANNUALLY and it would take more than 430,000 companies to deliver the equivalent products, services, training, financing, etc.

Q: What Inspired this 37X Plan Principle and Size?

A: THIS BOOK >>>>>>>>>>

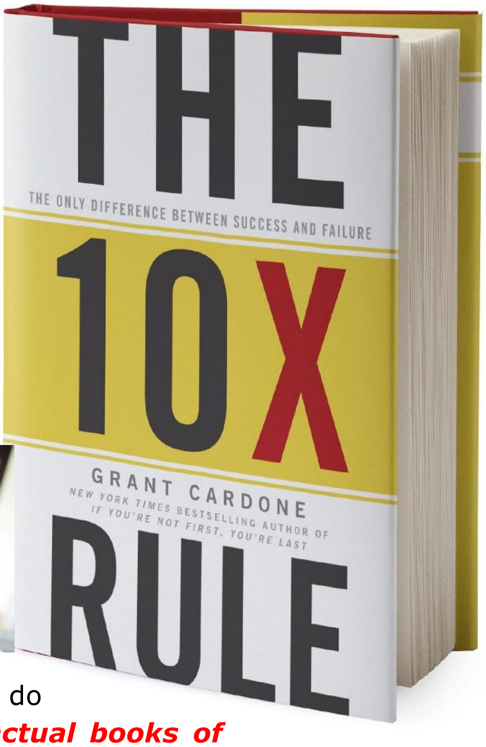

> ***"Massive thoughts must be followed by massive actions. There is nothing ordinary about The 10X Rule. It is simply what it says: 10 times the thoughts and 10 times the actions of other people... You never do what others do.***
>
> ***You must be willing to do what they won't do — and even take actions you might deem "unreasonable."***
>
> ***- Grant Cardone***

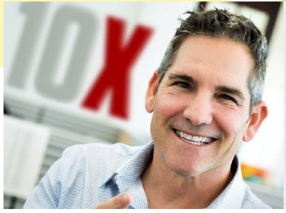

Independent reviews

WORD OF CAUTION: when you read these reviews, do not satisfy yourself by browsing them – ***read the actual books of Grant Cardone several times*** and listen to his audio book several times to grasp the full meaning and be able to APPLY these extraordinary principle to your business and/or area of influence.

'The 10X Rule' by Grant Cardone: Four Degrees of Action

By Avil Beckford, CEO & Founder of 'The Invisible', bookaholic, expert interviewer, writer, blogger, creator and Host of the 'Strategic Reading Challenge':

1. ***Do nothing:*** *You accept whatever life throws your way. You do not take any kind of action to move forward in life. How is this working for you?*
2. ***Retreat:*** *You fear success and probably take negative actions because you do not want to be criticized. Is this really working any better than doing nothing?*
3. ***Take normal levels of action:*** *You do what everyone does, take normal levels of action, sticking to the status quo. You operate within the established norms. Really, why aren't you living up to your true potential?*
4. ***Take massive action:*** Take whatever action is required to achieve mega levels of success. DON'T HIDE YOUR LIGHT UNDER A BUSHEL. Be the best you can be!

Read Avil Beckford's full review:
http://theinvisiblementor.com/summary-the-10x-rule-by-grant-cardone/

Mini-Summary of ‘The 10X Rule’ book by Grant Cardone

By Brian Robben, author of three Amazon bestsellers: *The Golden Resume*, *Freedom Money*, and *How To College:*

- ***Set huge 10X goals,*** *regardless of what you, other people, or society thinks is possible.*
- ***Take huge 10X actions,*** *regardless of what you, other people, or society thinks is necessary.*
- ***Focus on the huge results and why you set your goals,*** *because that will inspire you to do the work and it won’t feel like work when you’re rewarded for your big actions.*

Read Brian Robben’s full review: www.takeyoursuccess.com/the-10x-rule-book-summary/

Where to get the book

- ***Hardcover:*** https://grantcardone.com/products/the-10x-rule-book
- ***Kindle:*** www.amazon.com/10X-Rule-Difference-Between-Success-ebook/dp/B004X75OES
- ***MP3:*** https://grantcardone.com/products/the-10x-rule-mp3

Must-Have MP3 Packages

1. https://grantcardone.com/products/grant-cardones-core-mp3-package

OR better yet:

2. https://grantcardone.com/products/grant-on-the-go-plus-mp3-package

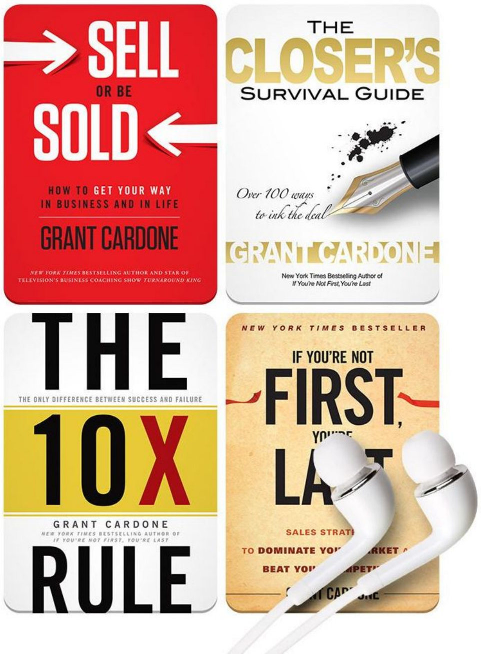

More golden value from Grant Cardone

- https://GrantCardone.com/
- http://CardoneUniversity.com/
- www.youtube.com/channel/UCdlNK1xcy-Sn8liq7feNxWw

On Sharing

One of the best things that ever happened to Waterfuel is **sharing.** Here, too, sharing means different things to different people. Some have trade secrets they wish to hide and are only willing to share partial information, while others have no restrictions whatsoever on sharing the fruits of their research and development. To my mind, both are right and we should be grateful for everyone's contribution to the economy and the environment.

Me, personally, I'm on the open source side as I've always been. That's why I wrote this book and that's why I have released my entire **Water4Gas** plans, research and development for free use by the worldwide public (find free updated downloads at www.Water4Gas.com).

I **inherited** this the spirit of sharing from the original jar developers, **Tom and Bill Lang** of www.WaterToGas.com and from **George Wiseman** of www.Eagle-Research.com who had invented and shared vital technologies, knowledge and experience.

If you're one of the old timers of the Water4Gas you'd recognize these sharing events. The photo above: tiny Saturday events near my home in Studio City, 8 to 12 people each. Quickly grew to huge events that only Woodland Park could hold (partial view below).

The diagram that sparked a multinational, multi-million-dollar movement, WAS ALL ABOUT SHARING

How did the smallest Waterfuel system shown above propel into this global movement → with over 100 million views and 1000’s of small businesses?

It started with this diagram that suggested the idea of sharing rather than ”trade secrets” and competition. It showed WHY every participant would have more to gain than lose. And it can be repeated in any industry – ***because the people love this idea.***

And none of this would even be possible if it wasn’t for ***Tom and Bill Lang*** sharing the jar design shown above, and ***George Wiseman*** sharing his invention called Electronic Fuel Injection Enhancer (EFIE, pronounced Ee-Fy) which is an electronic device essential for getting AND KEEPING good mileage in modern vehicles; read more at www.Eagle-Research.com

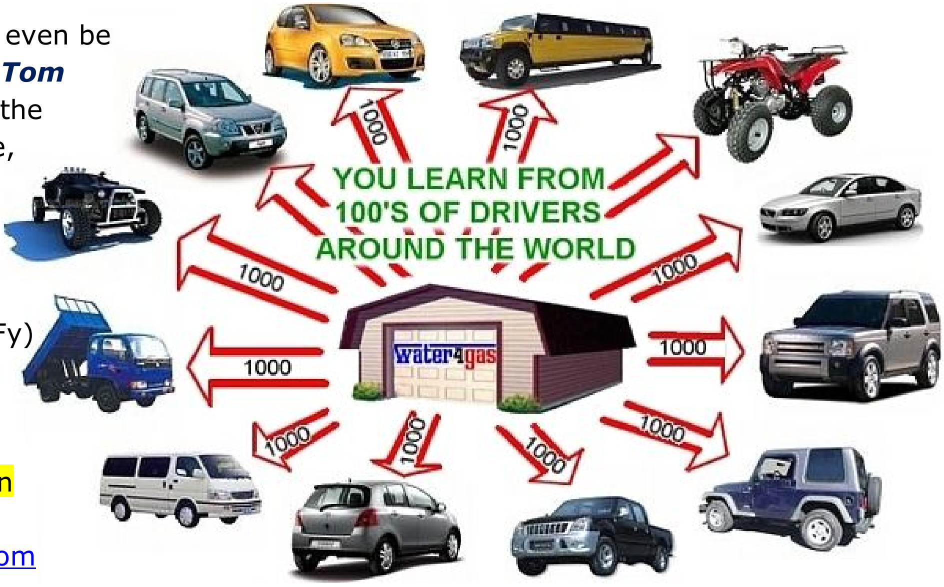

On Decentralization

Akin to SHARING but not the same is the principle of DECENTRALIZATION. Anti-cartel, and also the reverse of:

- Indefinite growth (where one company tries to devour everybody's fair share),
- Mergers & Acquisitions, usually done between bodies which are giants already,
- Producing all parts in one place,
- Having a strategic alliance with a single partner/factory/distributor/etc., however strong and beneficial that one may seem,
- Putting all moneys in one bank, or invest everything in one niche market,
- Using one marketplace, e.g., Alibaba only or Amazon only.

You get the idea – spreading the eggs into several baskets in every aspect of business. But ***why*** do I strongly believe it's a good idea to DECENTRALIZE the entire Waterfuel Industry – as well as all it major sections, activities and projects?

The similarities to the principle of SHARING are:

- Both are about letting someone else survive alongside your own survival,
- Both are generally good ideas.

But this is where similarity ends. DECENTRALIZATION has another purpose and that's security. Our biggest enemies, as indicated in Chapter 3, are GREED and IGNORANCE, which is as bad a combination as a loaded gun in child's hand – look, this combination was bad enough to hinder Waterfuel's progress for 101 years!!! We can talk all day about 'suppression' – but what have WE as an industry done to deserve it?

It's a simple strategic point. If you need to learn about strategy basics, you can read the many books written about it since the days of Sun Tzu[235]. Whenever there's a single soldier running in the field, or a single head sticking out of the crowd, he becomes a target. But what if there's a million of them all over the place? You have a hard choice between "who do I shoot first?" or just pick up your stuff and abort the mission.

If there's one factory doing all the work for you, then it could burn down (accidentally or not), be intimidated or bribed not to work for you, steal your plans, hostile take-over, etc. If you work with one bank or a single marketplace, just the same, your funds or services could be seized or interrupted.

Greed tells us to keep everything we have hunted with lots of sweat/expense. But in the energy industry, the powers of greed are not 'wild' – they are outright insane and violent.

Enough said. Decentralize.

---

[235] Chinese general, military strategist and philosopher who wrote 'The Art of War'.

Decentralizing in Real Life

My background is in Air Force servicing on all possible levels, and under great stress of war time and/or near-insurmountable shortages of manpower and equipment alike. I've also performed, documented and taught installations and maintenance on all levels of high technology of complex industrial and military systems. Not trying to brag, just to tell you that I have a broader view than your average techie. From my angle I can see exactly why the industry is not growing as it should, and this chapter takes it factor by factor. But on this page I'm giving you an applicable principle relating specifically to decentralization.

Many manufacturers of Waterfuel equipment today tend to show off by designing and producing a multiplicity of models. Yes, it's very impressive, I'm truly impressed too. But at what price? Some of the negative effects:

- You're confusing an already confused client; he has a hard time swallowing one pill and you're giving him ten,
- You need to certify many machines and handle all the diversity of designing, certifying, tracking and inventorying parts/documents/etc. This is OK if it's absolutely necessary – but what if it isn't?
- Lead time is affected when there are multiple models and many parts,
- Client system design is slowed down by these factors.

So here's how this can be solved: MAKE ONE MODEL. Maybe two at the very most, if you really feel you must. Can this be done? It sure can – but only if you take all the factors involved and handle them one by one. Let me explain each factor.

A. ONE MODEL FITS ALL

This can be done by ditching the multiple-model approach and keeping the one model that can serve all if properly adapted for the job. For example, your clients may need HHO/Brown's Gas generators in a variety of sizes; a small tug boat may need less than 1,000 LPH[236] while a certain yacht needs 2,000 LPH and a certain oil tanker 3,000 LPH. So you take a 1,000 LPH generator, build it and certify it to be the very best you can, and that's it. Now, you provide the tug boat with 1 generator, for the yacht 2 generators and the tanker gets three. Life has just become simpler.

B. THE POWER OF SIMPLICITY

All you need to prepare is the stackability of these units. Compare it to kindergarten building blocks – any structure can now be built to fit tight spaces; even in the middle of the desert, tighter spaces mean lower costs and quicker installations because in many cases there are small spaces already available, and now you don't need space and support for one giant generator.

---

[236] Liters per hour.

A. INSTALLATION CONSIDERATIONS

This photo is not Waterfuel-related (found on Wikimedia) but it's here to demonstrate the principle. In the photo, Electrician Martin Blanchet is volunteering to help other veterans with 'Heroes on the Water' project. Blanchet is using his knowledge of electricity – which may differ somewhat from other countries but where he works it's STANDARD. If he got the job of installing your system half way across the world and it was built to fit ANY standard of electric power (unit has no mains plug but a secure panel-mounted inlet; machine fits any supply voltage) then he would be able to connect it to the electric panel of the client ACCORDING TO LOCAL REGULATIONS which may not be well known to you.

Same with hoses and adapters: keep it simple! Local mechanics would be able to do the "plumbing" of water supply and HHO output by following your SIMPLE instructions and will do it according to local regulations. Provided you have prepared the housing to stacking and/or racks/slides, the local engineer can make sure each unit in the installation is secure and easy to access. This arrangement will also make it ***easy to maintain the system*** by replacing a faulty unit.

B. SYSTEM DESIGN IN MINUTES INSTEAD OF HOURS OR DAYS

Several months ago I was asked to order a dozen HHO/Brown's Gas generators for a client in Europe. I phoned one of the best manufacturers (one of those who have excellent products but in many, many models). Sales Department said that their capacity is tied up and nothing could be manufactured for us in several months (and never followed up with me which is a separate sales mistake). I couldn't wait that long. No deal.

The new scenario:

A phone comes in. The client asks if you could provide them with a system to enhance Engine-X. You check the displacement of Engine-X; using a simple formula you find out that it would require 5,000 LPH of HHO/Brown's Gas at full load. So you need five units. Two minutes have passed. Now ask the client where they can fit five boxes measuring X by Y near Engine-X. Most probably the answer is "no problem". One more minute. You check your inventory – five units or more in stock. Of the right model, of course, because all you have is that 1,000 LPH model. Plug the number 5 into your usual pro forma invoice. It hasn't been 5 minutes, maybe 10 minutes on a slow day, and you're ready to click the Send button and email or fax the proposed system/cost to your client.

While your competitor is still trying to explain to his client what the different models are. Which exist on paper, showroom, website gallery and YouTube – but not on the shelf…

Market Size Evaluation

How to Evaluate Niche Market Size?

Neglected and/or Overlooked Niches

A common mistake in evaluating a global, embrace-all market size is to neglect sizeable portions of the market. Example: Welding – in many cases evaluators will research or calculate the dollar value of:

1. Welding machines and equipment
2. Welding supplies
3. Welding gases.

But what about…

- Training new welders?
- Welding – i.e., being in business for doing welding itself.

And by that I'm referring to NEW business, not old ones. Because when you examine HHO/Brown's Gas, for example, it creates NEW business niches that haven't been there before. Like the home-based mobile service for carbon cleaning described later in this chapter. For HHO/Brown's Gas it can mean NEW welding services that haven't been there before, such as:

- Underwater welding (which is better than existing options),
- Time-critical service or production,
- Wherever safety issues make acetylene bottles too hazardous,
- Mobile services that specializes on tight spaces where normal welding is impractical or dangerous,
- TRAINING all of the above,
- Consultation,
- Selling equipment to jewellers and other existing professionals, by going to trade shows or straight to their district, and showing them the advantages, etc.
- Think of the health issues and work-related injury rates, and what this means in terms of helping both the workers and the employers.

Another example from my experience:

- When searching for providers for Waterfuel-Assisted Microturbine (WAM) which are, simply stated, existing small-scale electricity/heat production turbines for distributed/remote power, with their combustion efficiency enhanced by HHO/Brown's Gas. so far, sounds simple.

- But the problem is China – by far the greatest energy consumer in the world – but one that does not have a sizeable industry for manufacturing microturbines.

- If you were to offer them the idea of WAM – where would you get enough microturbines when the main source is an American manufacturer which has great quality but is too small to even scrape the surface of China's REAL needs?

- On the other hand, China FOR SURE has the ability and know-how to manufacture microturbines because these are nothing more than small jet engines in a box.

- So what is needed? Somebody to help them or guide them to make microturbines. How hard is that? So that's another business opportunity and also giving help to an industry that doesn't know it needs help.

Bottom line: widen your scope and you will find all the new things that can be done. You will surely find niches that have NOT been neglected; previous evaluators simply didn't know these options existed, let alone being able to EXAMINE their value and think with that. See, there was nobody to survey – they couldn't go around asking people if they wanted a product or service that was non-existent (in the current reality of the surveyed).

Market Size Research Resources

You can give it to professional researches, if you have the budget or manpower for the job. Otherwise you can use the free resources listed below. Note that some are global while others are region-specific; also, some of the resources help you evaluate the RISKS involved with specific markets in specific regions of the world:

- Statista – www.statista.com – is a statistics portal with over a million stats and facts; some services/data are paid-only but you can find more than enough information for free when you use the main navigation menu instead of keyword search: www.statista.com/markets/
- World Bank:
    - World Development Indicators http://data.worldbank.org/data-catalog
    - Logistics Performance Index http://lpi.worldbank.org
- World Economic Forum, Global Competitiveness Report: www.weforum.org/reports/global-competitiveness-report-2014-2015/
- Euromonitor International, Global Market Information Database: www.euromonitor.com
- U.S. Energy Information Administration, International Energy Annual: www.eia.gov/countries/

- Small Business Administration (SBA), USA:
  - Business Data and Statistics www.sba.gov/content/understand-your-market-and-economic-conditions
  - SBA's guide to Conducting Market Research: http://www.sba.gov/content/conducting-market-research
- Census Bureau (USA, www.census.gov) offers several tools:
  - Data Access Tools www.census.gov/data/data-tools.html
  - The American FactFinder www.census.gov/2010census/popmap/
  - Interactive map www.census.gov/cbdmap/
  - Training www.census.gov/mso/www/training/
- Overview of all data produced by USA government agencies: www.FedStats.gov
- Small Business Administration (USA), Office of Advocacy: www.sba.gov/advocacy
- USA economic indicators from the Bureau of Economic Analysis and the Census Bureau: www.EconomicIndicators.gov
- Corruption, and civil/business rights, by region and country:
  - Survey of Freedom in the World: https://freedomhouse.org/report-types/freedom-world
  - Corruption Perceptions Index: www.transparency.org/research/cpi/overview
  - Heritage Foundation – Index of Economic Freedom: www.heritage.org/index/
- Country Risk Survey:
  - Coface (USA) www.coface-usa.com/Economic-studies
  - Credimundi www.credimundi.be/en/country-risks/ (set your language on the far right side of the top menu)
  - Swiss Export Risk Insurance https://premium.serv-ch.com/premium-calculator/coverPractice/list?lang=en_US
  - USA Census Bureau Foreign Trade Division – Country Trade Data www.census.gov/foreign-trade/statistics/product/enduse/exports/index.html

Additional Study

- "Measuring The Potential of Emerging Markets: An Indexing Approach" by S. Tamer Cavusgil, published in Business Horizons, January-February 1997, Vol. 40 #1, pages 87-91 [http://dx.doi.org/10.1016/S0007-6813(97)90030-6]
- "Complementary Approaches to Preliminary Foreign Market Opportunity Assessment: Country Clustering and Country Ranking" by S. Tamer Cavusgil, Tunga Kiyak, and Sengun Yeniyurt, published in Industrial Marketing Management, October 2004, Volume 33, Issue 7, pages 607-617 [http://dx.doi.org/10.1016/j.indmarman.2003.10.005]

Are Perfectly-Calculated Trends Real?

When statistics from several sources all agree on same or similar numbers, does this mean necessarily that they are true? You know and they know that they can err somewhat. But what if I told you that in regards to the Waterfuel industry they can err by a whole lot??!

I totally respect the analysts and statisticians, their work is hard, intelligent and vital to the economy. Nothing to say against them because there's something else at play. Disruptive technologies tend to change the best of predictions when those predictions overlook such threats to the (apparent) stability of the 'status quo'

Global Market Size for all Waterfuel

This section should also serve as a mind-jogger for business ideas/tips.

Many of the numbers given here are my rough estimations based on the best data I have access to, and do not represent thorough, professional evaluations of markets and opportunities.

Welding with HHO/Brown's Gas

- $20 billion is considered the entire niche by several sources.
- Mostly electric arc welding, with gas welding accounting for about 12-13% of that – bottled gases, torches, etc.
- If eventually this entire niche is replaced by welding/cutting with HHO/Brown's Gas, that's ***$2.5 billion annual cash revenue;*** remember, this includes the amount of electricity required, that would have to replace the gas supplies namely acetylene/hydrogen, and (most but not all of) oxygen/etc.

Photo by STS-Weld.com from Iran (Wikimedia Commons)
Watch live demo: https://youtu.be/9HWlo4LwBMU (gases used unknown)

Fuel Saving with HHO/Brown's Gas

This is not about "fuel saving devices" but the global value of everything that has to do with reducing consumption AND REDUCING POLLUTION with all environmental implications – the entire population's health, etc. And it includes ALL fossil fuel types including coal.

- Global annual sales, as stated earlier: $4,000,000,000,000,000 (4 quadrillion)
- Reducing only 12% out of that: $480,000,000,000,000 (480 thousand billions)
- Carbon tax saved: The Carbon Tax Center https://www.carbontax.org/faqs/ predicts $440 billion tax from the USA alone. With Waterfuel you can cut this by roughly 50% (if not much more because many will fall below their allowed pollution levels according to today's standards) so that gives us $220 billion for the USA which is the second polluter after China as far as the stats tell.
- Health implications: cannot calculate, sorry. Can you calculate this impact and message me via Facebook or LinkedIn? However, to be paid a portion of that your only way would be to work hard on getting government and international grants.
- We're looking at a total of about 1 eighth of a quadrillion. But that's not a potential income level yet.
- What businesses will pay for, is only immediate savings in fuel costs and/or carbon tax THAT THEY ARE ALREADY PAYING FOR. Assume they give 7% of the fuel savings and bank the rest, that's only $33,600 billion.

The rest may raise this number slightly up to about ***$34,000 billion in potential cash revenues.*** Not for one company for one year, but that's the overall view of the income of an entire industry as far as I can calculate it. From one niche market.

Interesting data we've found from working with marine clients: the main consumable for on-board generation of HHO/Brown's Gas to save fuel is neither the chemical catalyst (which would cost about $0.65/day) nor electricity which sets a near-negligible load on the ship engine or power generator. The main consumable is distilled water. So we calculated how much it would cost to buy distilled water (at current prices, $1.20/gallon in bulk). Only to discover that ships already have copious amounts of distilled water!

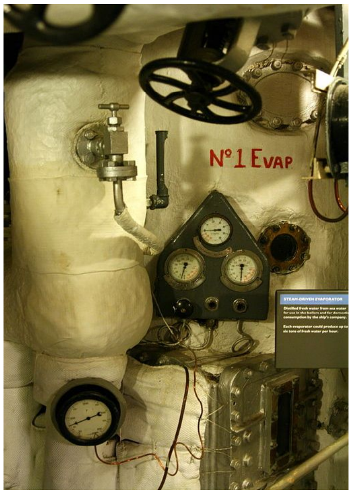

The photo was taken by Rémi Kaupp on board the museum ship HMS Belfast, but all modern ships are equipped with such an apparatus, or most probably several of those on any big vessel. It's called evaporator, distiller or distilling apparatus and is used on a ship to produce fresh drinking water from sea water by distillation. The energy is taken from the ship's engine(s) excess heat which means, again, negligible costs of consumables!

Like Sir Anthony Griffin is quoted in Chapter 10 to say *"boats floating on their own fuel".*

Anti-Aging with HHO/Brown's Gas Treatment

This is not fantasy but, as described in Chapter 27, is already happening in Taiwan (Epoch Energy Technology) and spreading to Japan where this niche market is much bigger; as well as Canada/USA (Eagle-Research) and others.

The Global Anti-Aging Market was worth $250 billion in 2016 and is estimated to reach $330 billion by 2021. Skin care accounts for 30%, or ***$100 billion in cash revenues.***

The market doesn't know it yet, but I estimate that roughly 75% can eventually be taken over by HHO/Brown's Gas treatment, which gives us ***$50 billion in annual cash revenues.***

Carbon Cleaning Mobile Service

A basic business plan on how to do this mobile service as a home-based business is given at the end of this chapter; it can easily integrate into any automotive shop/repair/detailing. Any minimally-trained individual can build a $220k/year business. He can serve many clients by cleaning their engines while knowing very little about the guts of modern automotive engines because he never has to open engines or remove any part other than the air filer box cover, sometimes not even that.

Auto detailing market in 2018 is estimated at ***$284 billion,*** in the USA alone.

This carbon cleaning niche belongs in repair and detailing, and can add an estimated 5% to the revenue of local businesses, whether independent or chain branches.

The sales to independent owners (like what's happening right now in the UK as shown in said basic business plan) can and should spread to all countries of the world, rich or poor. Everybody wants a clean engine (not for pollution but for performance, smooth operation and fuel economy) and it's an ongoing service, like laundry or dry cleaning. You keep coming back with more dirty clothes, usually to your favorite shop. THIS market size can be related to the number of cars, buses, pickup trucks and semitrailers as well as all small engine-driven boats, new and old, which are in service now. And medium to large motorcycles (95 million motorcycles; about half of which are electric or too small for the proposed service, which leaves us roughly ***47 million motorcycles*** whose engines need periodical cleaning). The estimated total of vehicles is over ***1.2 billion vehicles*** today and growing fast. Currently at least ***1 billion piston-driven vehicles.***

Can this be scaled up to large boats, yachts, cruise ships, tankers, navy, who do not (yet) wish to install Waterfuel add-ons? According to some statistics by Statista, Maritime Knowledge Centre and others, there are over 51,400 merchant ships, about 87,480 ocean-going ships/yachts and a total of over 104,000 marine vessels including fishing boats, tug boats and other small vessels. Let's assume roughly ***100,000 marine vessels*** with at least one piston engine (propulsion or on-board generator).

Marine propulsion engine market size (nearly all of them Diesels and other fossil-fueled) is about $9.9 billion.

How about other heavy transportation such as trains and airplanes? Of course it can and it should be scaled up to those. According to UIC.org, at the beginning of 2015 there were ***48,504 locomotives*** in the European Union; this number includes light/tramways that are electrical (couldn't find percentages). However, the top-10 countries that use railway are (heaviest yearly tonnage first): China, USA, Australia, Russia, India, Brazil, Ukraine, Canada, Kazakhstan, Poland; no EU country there, which means the world has ***hundreds of thousands of locomotives,*** and I believe a big portion of those are large Diesels.

The worldwide commercial aircraft fleet is about 20,000 aircraft but those are mainly jets. In general there are about 312,000 aircrafts of all types. From the newly manufactured, 45% are piston. So assuming at least ***140,000 piston aircrafts*** in use.

So we have 1 billion vehicles, 100k marine vessels, estimated 250k Diesel locomotives. That's still a billion, but remember that each marine vessel and locomotive needs service that compares to 100 large vehicles or more (see comparison below that puts a car, a large Komatsu® earth-mover truck and a large Komatsu® excavator – showing that one excavator's engine equals 101 semi-trailer (18-wheeler, big-rig, lorry) trucks.

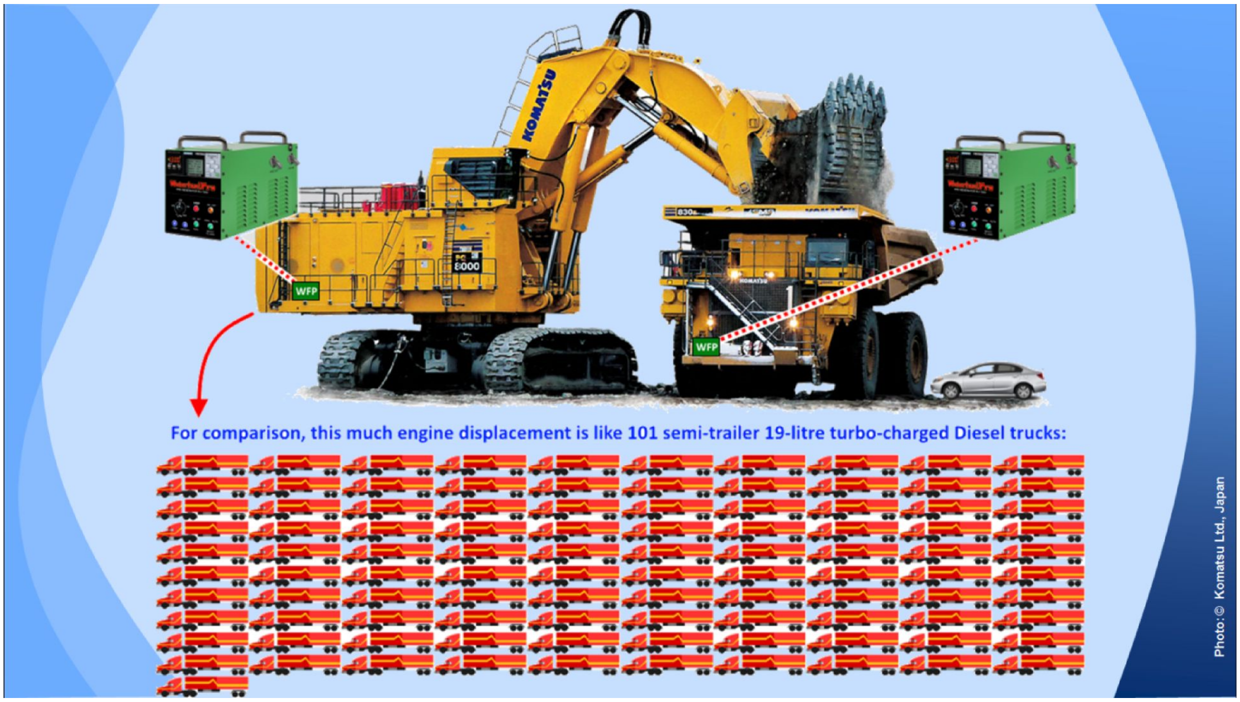

For comparison, this much engine displacement is like 101 semi-trailer 19-litre turbo-charged Diesel trucks:

Photo:© Komatsu Ltd., Japan

Bottom line is an equivalent of:

- 1.035 billion vehicles to give service to, on the order of $200/year if market penetration was 100%. Roughly $207 billion.
- A $284 billion aftermarket niche to sell machines/services to.
- So that's a total of nearly ***a quarter trillion dollars, annually.***
- *Remember: This section also gives you major numbers for the fuel saving application/niche.*

Nuclear Waste Treatment

The technical and scientific details are in described in Chapter 25.

How big is this market niche? According to www.visiongain.com, the nuclear waste management market in 2017 is worth ***$1.9 billion.*** According to Transparency Market Research www.transparencymarketresearch.com by 2024 this market is expected to reach ***$5.63 billion.*** Enough said.

From here onward it's politics and lobbying so I'm not saying you could get a $5.63 billion/year contract if you were big enough. But that's the value of this niche market. Now you know.

Ampoule Sealing

This market is growing fast by 9% a year. Partly because regulatory authorities are paying greater attention to quality pharmaceutical packaging in general. And ampoule cleanliness, since they are always sealed by flame, is of utmost importance.

The global ampoules packaging market is around $3.97 billion in 2017 and expected to reach ***$5.06 billion*** by 2020. What portion is for torch gasses is unknown, but it's a vital consumable of this industry, I estimate ***$1 billion*** annually.

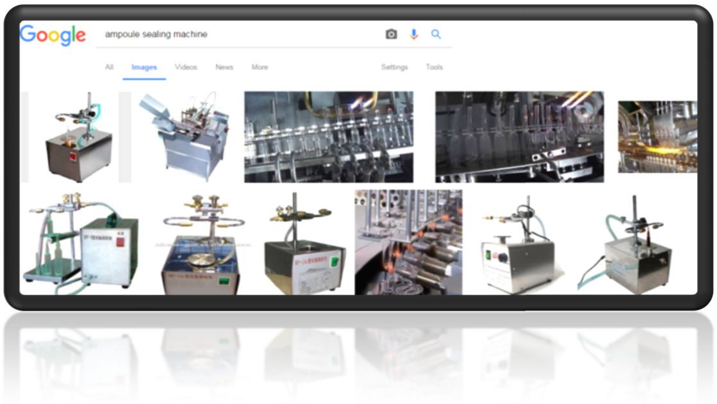
ampoule sealing machine

This market offers the advantage of simple installation. You can see sample images and videos by Googling 'ampoule sealing machine'. These machines exist and are in use by three major markets:

a) Pharmaceutical (injectables)
b) Cosmetic (certain serums)
c) Chemical labs/industry (analytical standards, air sensitive materials).

Some machines are hand operated with a single/dual torch built for short runs and small manufacturers/labs, while other machines are automatic with multiple torches for mass production. In both cases, all you need to do is pull out the connection to the supply line of flammable gas plus oxygen, and hook it up to a single HHO/Brown's Gas generator.

This application has already been tested in Asia and several HHO/Brown's generator manufacturers are offering this solution to the three industries listed above.

Jewelry

Jewelry at large is a ***$200 billion*** dollar market, and the largest share – 33% – belongs to Chinese manufactures.

Fine, clean and fast welding, soldering and brazing of fine jewelry can be done with HHO/Brown's Gas however, the number of jewelers using it was and is going to be a trade secret – those who use it don't tell anybody, fearing to lose their competitive edge (quality, price, production levels). Therefore, it is hard to determine the level of market penetration now and in foreseeable future.

But this is what we do know – that the global jewelry industry can be served in more than one way:

- Sell machines to jewellers
- Sell machines to jewelry schools
- Teach jewellers how to use HHO/Brown's Gas effectively and safely
- Sell machines to artists (metal, glass, ceramics)
- Sell books and other types of information
- Create art yourself, that is unique in its quality and beauty; to get better understanding, watch glass/enamel artist Joseph Spencer in the last part of this video (11:10 min.) and copper artist Dee Crews (12:50 min.): www.dailymotion.com/video/x1966y9_denny-kleins-hydrogen-welder_auto
- Create a large industry of the above unique art. Who's to say how big it can get? Swarovski is everywhere and so should this art.

How to evaluate such a great diversity of factors that are partly kept secret? I must guesstimate here – the portion of all the above from the ***$200 billion*** pie should be at least ***$5 billion*** in annual cash revenues.

Cooking Gas

In my humble opinion, the entire market for Liquefied Petroleum Gas (LPG, propane, butane) is obsolete and should give way to HHO/Brown's Gas just like the horse and buggy gave way to modern cars. Even in picnics, military and other remote areas it would be safer to bring a solar panel (to power the generator) and some distilled water rather than gas tanks of any size and any sort.

According to Grand View Research, LPG is projected to reach $148 billion by 2024. Roughly 49% for residential use, out of which space heating is the main portion. Industrial portion is about 12% plus nearly 10% for various other uses, under which comes restaurant use; exact numbers unknown but these are bigger than home use. Overall, I'll take the overall usage of fossil-based gases **for cooking** at an estimated ***$20 billion*** worldwide. In the USA the proportions are different but the global market is mainly in Asia-Pacific where they cook with a lot of gas and a lot of oil.

The safety factor

The photo below by 'ANT Berezhnyi' shows a gas network emergency vehicle (yellow van) and a fire tank truck (red) responding to a major fire in Kiev, Ukraine, 2010. A police jeep and an elevated aerial work platform are seen on the left background. Exactly how many fires from cooking gas worldwide? That same year, 2010, I witnessed a cooking gas explosion in Panama City, that took two lives, was so loud it shook the city and created a major disruption for hours.

Statistics from the National Fire Protection Association in the USA tell us that fire departments responded to a yearly average of 166,100 home structure fires that involved cooking equipment (46% of reported home structure fires), 480 deaths (19% of home fire deaths), 5,540 injuries (44% of reported home fire injuries), and $1.1 billion in direct property damage (17% of total direct damage in home structure fires). Exact numbers for Asia and Africa are harder to find but the picture is not prettier. And we haven't even started with the hazards of refinery storage, transportation and distribution worldwide (and a terrorist target as well).

This photo of gas carrier Galea was taken by Wolfgang Meinhart in Barcelona, 2009. Don't say that I gave the idea to terrorists that this is a target because they have this idea already.

Toxic/Biohazard Waste Disposal (Incineration)

Not to be confused with neutralization of nuclear waste, this is about toxic waste from various sources such as hospitals, farming diseases, and industrial/medical/laboratorial operations that produce hazardous waste that must be destroyed to protect the population.

You can find more about the science and commercial products in earlier chapters.

An overview of all waste removal (all types) courtesy of WorldBank.org, is provided in this free download:
http://siteresources.worldbank.org/INTURBANDEVELOPMENT/Resources/336387-1334852610766/Chap2.pdf

Googling 'biohazard waste HHO Epoch Taiwan' brings up several videos showing the proposed solution by Epoch Energy Technology Corporation of Kaohsiung City, Taiwan – a mobile incinerator installed in a truck trailer, that uses fossil fuel to produce HHO/Brown's Gas that in turn is used to SAFELY and LOCALLY destroy bio-hazardous materials:

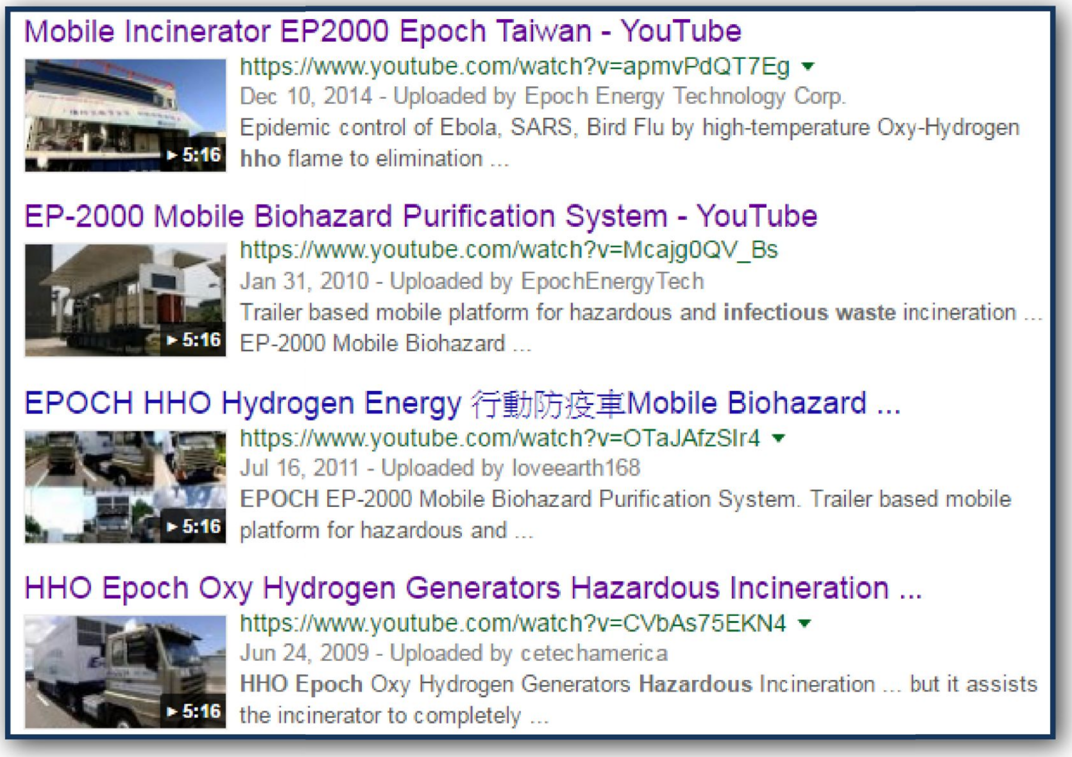

Mobile Incinerator EP2000 Epoch Taiwan - YouTube
https://www.youtube.com/watch?v=apmvPdQT7Eg ▾
Dec 10, 2014 - Uploaded by Epoch Energy Technology Corp.
Epidemic control of Ebola, SARS, Bird Flu by high-temperature Oxy-Hydrogen **hho** flame to elimination ...

EP-2000 Mobile Biohazard Purification System - YouTube
https://www.youtube.com/watch?v=Mcajg0QV_Bs
Jan 31, 2010 - Uploaded by EpochEnergyTech
Trailer based mobile platform for hazardous and **infectious waste** incineration ... EP-2000 Mobile Biohazard ...

EPOCH HHO Hydrogen Energy 行動防疫車Mobile Biohazard ...
https://www.youtube.com/watch?v=OTaJAfzSIr4 ▾
Jul 16, 2011 - Uploaded by loveearth168
EPOCH EP-2000 Mobile Biohazard Purification System. Trailer based mobile platform for hazardous and ...

HHO Epoch Oxy Hydrogen Generators Hazardous Incineration ...
https://www.youtube.com/watch?v=CVbAs75EKN4 ▾
Jun 24, 2009 - Uploaded by cetechamerica
HHO Epoch Oxy Hydrogen Generators **Hazardous** Incineration ... but it assists the incinerator to completely ...

According to analyst Nikos Thomopoulos of www.bccresearch.com, the global market for hazardous waste management is expected to grow to nearly ***$33.9 billion*** in 2019, growing annually by 5.5%. Can ALL of it be performed by HHO/Brown's Gas?

Yes, it can and it should.

Residential/Office/Factory/Shop Space Heating

First, here's an excellent overview by Krystyna Dawson (www.bsria.co.uk) titled 'Trends in the World Traditional & Renewable Heating Markets' – download from the International Energy Agency (www.iea.org): www.iea.org/media/workshops/2014/buildingwebinars/webinar4/4BSRIAKrystynaPresentationforIEAfinal.pdf

Zantingh Gas-Oil burner (photo: Hoogvlieth) - Illustrational

Remember: there are two major ***HEATING*** *technologies which are commercial now, namely* ***WATER CAVITATION*** *(Chapter 16) and* ***HHO/BROWN'S GAS*** *(Chapter 22).*

According to Grand View Research (full report at www.grandviewresearch.com/industry-analysis/heating-equipment-market) the global heating equipment market size was $28.85 billion in 2015 and is expected to reach ***$48.58 billion*** by 2025 due to the growing preference for energy efficient solutions. The most popular heating equipment, per this research, are 'heat pumps' known as two-way air conditioners, as well as furnaces which are still the most common heating system in the residential sector across the world.

Can HHO/Brown's Gas replace both of these technologies? Read Chapter 22 and decide for yourself. I think they can and they should, due to better electrical economy, safety and health. In an upscale building in Tel-Aviv I witnessed a leaking boiler that flooded the basement and created health/safety hazards and great discomfort; this could be avoided.

District Heating

There's also a market for DISTRICT HEATING where large systems supply heat from a single source to a large group of residential, commercial and industrial buildings. Used widely in the USA, Canada, UK, Russia, China, Germany, Poland, Sweden, Finland, Italy, Denmark, Japan and South Korea. The growing demand is due to two factors:

- According to WorldBank.org, 54% of the world population moved to urban areas, and this number is estimated to rise to 66% by 2050,

- Extreme colds around the world. Whether the planet is warming up or cooling down, more harsh winters in more places are fact. The population move to the big cities may be partly due to these harsh winters in the rural areas.

Thermal Power Plant in Taichung, Taiwan (photo: Chongkian)

According to Global Market Insights (www.gminsights.com) the district heating market size was valued at over $200 billion in 2016 and is expected to exceed ***$280 billion*** by 2024.

The technologies involved are approximately 3% solar and 20% geothermal, the rest is fossil-fuel fired and can surely be assisted by HHO/Brown's Gas (see scientific validation in Chapter 13). Which makes the targeted market (the portion to be served, not machines sold) ***$215.6 billion*** by 2024. This industry needs lots of HHO/Brown's Gas and accompanying services like consultation, installation, safety inspections, etc. so I'm assuming 5% of the targeted market, or ***$10.78 billion.***

Mining – Recovering Ore

The application is well explained by George Wiseman of Eagle Research Ltd. (www.eagle-research.com) in his lecture at NEXUS Conference, 2007: https://youtu.be/_1iq8XnoMxU

[21:00 min.] Application: ***ore processing.***
"Playing the flame over the ore does something science says isn't possible – transmutation. In this we're putting energy directly into the molecules of the elements that are in that stone. For example: we took ore that had only 3% cooper (i.e., they could recover only 3% of metal out of the rock), we took the same rock and treated it with Brown's Gas and it turned into a 20% copper ore, which – anyone who knows about metallurgy – that's just phenomenal."

"The reason that this happened had to do with Mother Nature. All the materials that it took to make the cooper were already in the rock, but they haven't finished being copper, they haven't turned into copper yet. So if you 'cook' the rock with this gas, which puts this special energy into the molecular structure of the material, it finishes the process that Mother Nature already started, and more metal becomes available. What otherwise wasn't really metal yet, so the recovering process didn't get it, it couldn't get it. What this means, in the commercial sense, is that you can go back to tailing[237] ponds of copper mines, for example, have this type of copper, and process them and get three times more ore out of the stuff that's already on top of the ground (and already finely ground) than you did in the original mine."

Someone in the audience asked about gold; Wiseman answered that at that time he only had experience with cooper and platinum-based metals. He explained why it helped the platinum mine recover the metal whereas before they could not recover anything – the chemical processes were just too expensive. So it's very practical for a mining company to take electricity (which they can get relatively inexpensively) and water, and recover more materials without expensive processing.

Some statistics:

- The global mining market is estimated at $1,783 billion,
- Equipment: predicted $156 billion by 2022,
- Operating expenses of top mining companies (2015): $390 billion according to Statista,
- Bottom line: a huge industry.

Questions:

1. How much ore can be recovered by HHO/Brown's Gas during ongoing mining?
2. How much MORE can be recovered from the material that's laying there on the ground, that doesn't require digging and doesn't require grinding?!!

The answer, I can only guesstimate, is in the range of 15% of the entire market size, or ***$267 billion.***

Molding

The size of the injection molded plastic market size, more accurately measured in tonnage of plastics, was 100 million tons in 2015 and with an annual growth factor of over 5%. What's the dollar value of that? There are between 2,100 and 2,850 rotational molders worldwide; more in injection molding. The three big buyers in 2015, according to Global Market Insights:

---

[237] Tailing ponds are areas of refused mining tailings where the waterborne refuse material is pumped into a pond to allow the sedimentation (separation) of solids from the water.

- China: $1.63 trillion
- Japan $728 billion
- India $412 billion.

With 5% annual growth, so that's over ***$3 trillion*** already, or over $3.5 trillion by 2020.

Rotational Molding (photo: Sustainable Sanitation Alliance, Germany)

We don't make plastics or molding machines. The money is in enhancing the energy efficiency. ***This process uses up a lot of heat,*** which can come from many sources but usually from water boilers of various sizes. And THAT'S our target.

How much of the 3 trillion invested by these three Asian countries goes to heating? If we liken it to other major fossil-fueled operations, then something in the range of 40-60% goes to energy expenses. And this puts the estimated ENERGY portion of the molding industry at ***$1.2 trillion.***

Let's Tally the Annual Revenue Potential

Per the above estimations:

1. Fuel Saving $34 trillion
2. Welding $2.5 billion
3. Anti Aging $50 billion
4. Carbon Cleaning 0.25 trillion

5. Nuclear Waste $5.63 billion
6. Ampoule Sealing $1 billion
7. Jewelry $5 billion
8. Cooking $20 billion
9. Hazardous Waste $33.9 billion
10. Space Heating $48.58 billion
11. District Heating $10.78 billion
12. Mining (ore recovery) $267 billion
13. Molding $1.2 trillion.

We have a subtotal of ***$35.9 trillion.*** It's not an exact number – its constituent parts probably have more than one or two inaccuracies, yet it gives you the overall scale of this industry. And we haven't yet covered more than twenty industrial niches: microturbines, creating precious stones, soldering, tempering, epoxy curing, etc. Waterfuel Assisted Microturbine (WAM) alone can be a big industry, so I estimate that these extra niche industries close the last $1.1 billion and we get a "round" number of ***$37 trillion.*** I'm not a big fan of numerology but here's that 37 number again…

In any case, according to national statistics there are 1,585,682,383 households globally, meaning that this industry alone can provide full/partial income to everybody on Earth.

Just remember that:

1. This is a very rough, preliminary estimation,
2. It's a GLOBAL number, which means not only that it covers all involved businesses in all countries. By 'global' it also means that these calculations take into account EVERYTHING that goes into the making of the bottom line effect, from CEOs to employees, through distributors and other supporting businesses – all the way to the very last woman and man that contributes something – the office cleaners, school teachers, nannies, journalists, municipal workers, doctors, shop workers, farmers, guards, etcetera, etcetera. ***There's a lot to be done and employing business owners, in their everyday struggle to survive, sometimes forget that we cannot do this alone.***

I tried to calculate: how many businesses, big and small alike, would it take to actually DELIVER this much product/service, annually?

The average small business (the 99% majority) brings in $75k/yr according to PayScale (not applicable globally, I'm aware of that but let's just take it for this discussion). To deliver a $37 trillion worth of product/service would take 493,333 such businesses plus 1% of big ones. According to Dun & Bradstreet (2013) there are 235 million companies across 200 countries.

Hence the ultimate ratio of all Waterfuel to global business: 0.19%

New Type of Hybrid: Waterfuel-Assisted Microturbine (WAM)

Application Overview

Distributed Energy Resources (DER) and Microturbines

Increased demands on the electrical power grid and incidences of electricity shortages, power quality problems, rolling blackouts, and electricity price spikes have caused many utility customers to seek other sources of high-quality, reliable electricity. Distributed Energy Resources (DER) describes small-scale power generation sources located close to where electricity is used (e.g., a home or business), that provide an alternative to or an enhancement of the traditional electric power grid.

DER is a faster, less expensive option to the construction of large, central power plants and high-voltage transmission lines. They offer consumers the potential for lower cost, higher service reliability, high power quality, increased energy efficiency, and energy independence. The use of renewable distributed energy generation technologies and "green power" such as wind, photovoltaic, geothermal, biomass, or hydroelectric power can also provide a significant environmental benefit.

Generally, DER provides the consumer with greater reliability, adequate power quality, and the possibility to participate in competitive electric power markets. DER also have the potential to mitigate overloaded transmission lines, control price fluctuations, strengthen energy security, and provide greater stability to the electricity grid.

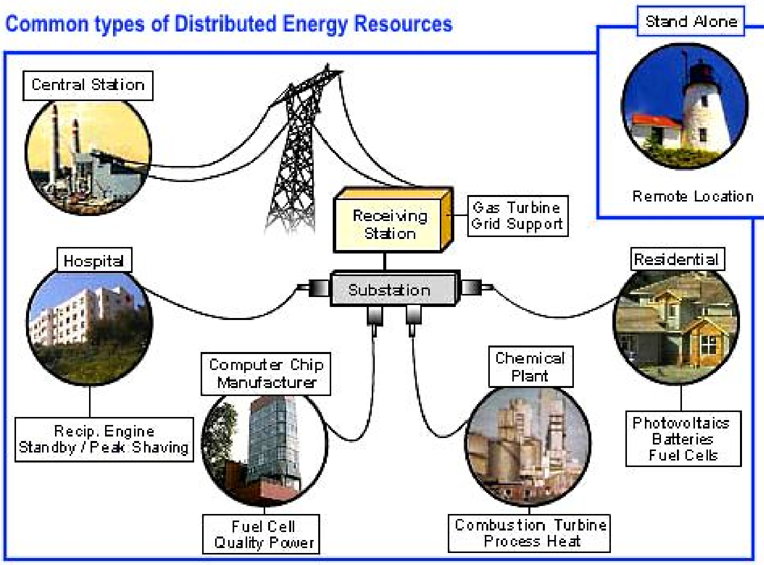

Image: California Energy Commission

Further study:

- DER described, illustrated and explained by Barney L. Capehart, PhD, CEM, from the College of Engineering, University of Florida: http://www.wbdg.org/resources/distributed-energy-resources-der
- Microturbines, by same author: https://www.wbdg.org/resources/microturbines

Different users have different power needs:

- HOSPITALS, CLINICS and LABS need high reliability (back-up power) and power quality (premium power) due to the sensitivity of expensive equipment.
- INDUSTRIAL PLANTS typically have high energy bills, long production hours, and thermal processes, and would therefore seek DER applications that include low-cost energy and combined heat and power.
- COMPUTER DATA CENTERS require steady, high-quality, uninterrupted power (premium power).
- NICHE TRANSPORTATION such as cruise/recreational marine and railroad users need optimal use of compact spaces for energy upgrades, as well as need for quiet and safe operation with fewer maintenance stops.
- SHOPPING MALLS, AIRPORTS and similar commercial facilities need to avoid losses of $10,000's per day in the event of a power outage.

One type of DER is Microturbines ***(still about standard ones)***

Microturbines work like jet engines but produce electricity instead of thrust. They offer several potential advantages compared to other technologies for small-scale power generation, including:

- One moving part,
- Compact size,
- Lightweight,
- Lower emissions,
- 35% efficiency better than Diesel (to my best knowledge at the time of writing)
- Thermal output for residential or commercial apps, which simply means that inevitable heat produced by the engine ***is a useful output,***
- Operable as base, peaking, or back-up power,
- Fuel Choice: Diesel, kerosene, natural gas, LPG/Propane, aviation/jet fuel, multi-fuel, Associated Petroleum Gas (APG) and various types of waste fuel (biogas, synthetic gas, landfill gas).
- Low noise, near-zero vibration (due to air bearings) and top safety (when equipped with automatic electronic control) makes them ideal not only for recreational use (yacht etc.) and remote power, but also for hospitals and all critical power such as airports, universities and malls,
- Downtime: typically 6 hours/year – over 99.93% uptime (to my best knowledge at the time of writing).

Because of their eco-friendliness, small size, high versatility, relatively low TCO (Total Cost of Ownership), microturbines in general are expected to capture a significant share of the distributed generation market. ***And you can ride this wave by assisting most if not all of them with Waterfuel, see below.***

Waterfuel-Assisted Microturbine (WAM)

The preliminary design for a hybrid energy solution defined as Waterfuel-Assisted Microturbine, or WAM, is one of the simplest technology wise, yet is grand in its scope.

Technically we take the existing technology called microturbines (small jet engines geared to produce electricity and heat) with their accompanying know how, suppliers, system designers and system builders/servicing – no reinventing the wheel there – and we add a relatively small HHO/Brown's Gas generator to each unit. Our gas is simply injected into the atmospheric air stream coming into the engine as shown below.

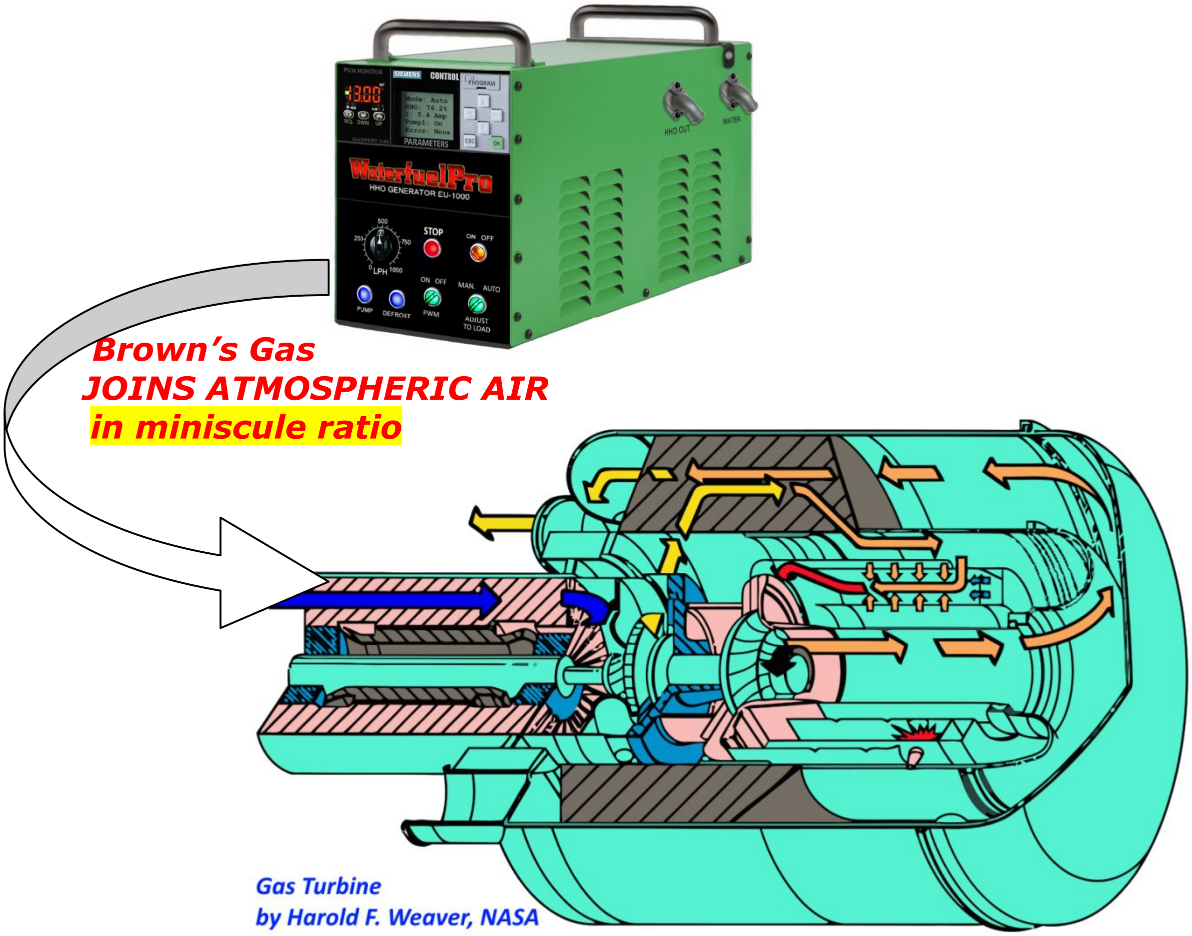

Brown's Gas
JOINS ATMOSPHERIC AIR
in miniscule ratio

Gas Turbine
by Harold F. Weaver, NASA

Similar to internal combustion, the inputs for combustion are SOME fossil fuel or biogas with a much bigger portion of ATMOSPHERIC AIR, to which we inject miniscule amounts of HHO/Brown's Gas. And, similar to regular Diesel/gasoline/gas generators, the engine drives the electricity-producing unit attached to its shaft. The difference in microturbines is greater simplicity of structure – basically a single moving part.

The main advantage of such hybrids is enhanced fuel economy. *As far as I know (again, not a guarantee by any means)* microturbines are already 35% more efficient than Diesels for the same or similar fuel grade, and with HHO/Brown's Gas they can reach efficiency levels about 75% better than Diesels.

Regarding Downtime

Even though WAM looks like an economical improvement, it is CRUCIAL for the long-term success of WAM that the additional hardware and installation be as good as the original microturbine in terms of very low maintenance levels. Remember, these are mainly for remote areas and you don't want to be sending technicians frequently to a remote location just to fix those add-ons, because doing so will wipe out the economical advantage.

As far as I know, HIGH QUALITY microturbines enjoy 99.93% uptime, and WAM hybrids must match this level or even improve on it. It means:

- HHO/Brown's Gas generators that are practically service-free, with not only low maintenance and small downtime but also long maintenance intervals of 5,000-8,000 hours or better,
- Well-done installation work and installation hardware,
- Automatic shutdown whenever the turbine is down for whatever reason,
- Automatic water filling,
- Worker and environmental safety; this includes not just quality but also integrating the additional portions of the hybrid into its certification, warning signs, literature and client/user awareness in general – everybody involved must be aware that this is not their usual microturbine but a new breed.

Target Markets for Waterfuel-Assisted Microturbines

General

The markets for these hybrids is energy-critical facilities such as:

- Hospitals,
- Military installations/mobile operations,
- Commercial facilities and remote residentials that are too remote to connect economically to the grid,
- Diverse clients such as universities, yachts, and others who wish to reduce their energy bills while also reducing noise and pollution,
- In essence, the same diversity of clients listed above; the difference being that they be made aware to the extra advantages of Waterfuel enhancement; they can be new customers that have never used microturbines before, or current users who wish to make their systems better and more economical.

Required Infrastructure

As stated earlier, this whole niche market cannot grow to significant proportions – to the proportions actually needed by global economy at large – *unless we help China realize that she should be making microturbines in sufficient quantity and quality.*

How Benefits (could be) Delivered to the Client

- INSTALLATION: each Waterfuel-Assisted Microturbine system should take 4-6 hours of installation by two well-trained workers.
- PAYMENTS:
  - The customer does not pay for installation,
  - The customer's average power bill – lowered by 20% – is paid monthly to the financing body for using the system,
  - As soon as the customer has paid up to a ceiling of $50,000 (for example), they stop paying the monthly bill and keep the system free and clear,
  - I believe that this is an offer that no user of distributed energy can refuse (once he is shown proof of safety, reliability and a few happy customers).
- FINANCING: The Waterfuel add-on system provider (manufacturer/dealer) and installer get paid their cut of the $50k, per agreement with the financing body.

Market Size

- According to the 2012 study of Transparency Market Research, based on Dept. of Energy, EPA and many other sources, the Distribution of microturbine end use was:
  Industrial 59.33% ::: Commercial 35.28% ::: Residential 5.40%
  Of course, WAM providers don't have to distribute their business in such proportions.
- More on microturbine market size/share: www.grandviewresearch.com/industry-analysis/microturbines-market
- Based on these stats, I presume the following offers:

End User	Power Capacity	HHO Gas Output	Unit Price (???)
Industrial	250–500 kW	2,000 LPH	$10,000
Commercial	50–250 kW	1,000 LPH	$8,000
Residential	12–50 kW	500 LPH	$6,000

Based on the economics of regular (non-Waterfuel) microturbines summarized by Barney L. Capehart (based on data provided by the *California Distributed Energy Resources Guide on Microturbines),* my calculation for regular vs. WAM overall economics are as follows:

Standard Microturbine		WAM
Capital Cost	$700–$1,100/kW	Additional $20-$100/kW
O&M[238] Cost	$0.005-0.016/kW	Nearly the same
Maintenance Interval	5,000-8,000 hrs	SHOULD match

---

[238] O&M: Operations and Maintenance

Growth projections I have found all expect an explosive growth for DER in general (William Atkinson of Electrical Contractor magazine gives a good overview www.ecmag.com/section/systems/explosive-growth-distributed-energy-resources-way) Projections are diversified from DOUBLE to TRIPLE the global market size between now and 2024. Projections by Navigant Research indicate a Global market size of ***$1.85 billion.***

Further study and stats:

- Good overview of existing microturbine technology, that covers only Capstone and EnerTwin (while ignoring market segments held by FlexEnergy, Global Microturbine LLC, Turbec, and Elliot Company Inc.): www.decentralized-energy.com/articles/print/volume-16/issue-5/features/microturbines-take-on-the-market.html
- Historical overview and future vision: http://www.retailenergy.com/articles/microturbines.htm
- Growth in all World Markets: www.energymanagertoday.com/microturbines-opportunities-barriers-0113003/
- www.marketsandmarkets.com/PressReleases/micro-turbine.asp
- www.marketsandmarkets.com/Market-Reports/micro-turbine-market-150779371.html
- www.futuremarketinsights.com/reports/global-microturbines-market
- www.grandviewresearch.com/industry-analysis/microturbines-market
- www.navigantresearch.com/research/microturbines
- www.decentralized-energy.com/articles/print/volume-16/issue-5/features/microturbines-take-on-the-market.html
- www.businesswire.com/news/home/20160920005883/en/Global-Microturbine-Market-Exceed-USD-940-Million
- www.freedoniagroup.com/Micropower.html
- https://globenewswire.com/news-release/2016/06/15/848681/0/en/Micro-Turbine-Market-Is-Anticipated-To-Witness-Surge-In-Demand-For-Hybrid-Electric-Vehicle-Manufacturing-Till-2024-Grand-View-Research-Inc.html

Microturbine Traders

- www.globalmicroturbine.com/ “We buy/sell only Capstone Turbine C30, C65, C200, C600, C800, C1000”
- www.alibaba.com/showroom/micro-turbine-generator.html
- www.sirgen.com/gasturbine1.html
- www.uspowerco.com/used/natural-gas-generators/capstonemicroturbine-2901.htm
- investorshub.advfn.com/boards/read_msg.aspx?message_id=51635704

Another Grossly Overlooked Business Opportunity: Liquid Water (H_2O)

This image is from US Patent 5035227, granted in 1991 to inventor Herbert Hansen. It describes an alcohol/water fuel vaporizer for use in an internal combustion steam engine, and is brought here as one example out of many such inventions presented or linked throughout the book, namely: using water, good old H_2O, as fuel OR as part of a fuel mix.

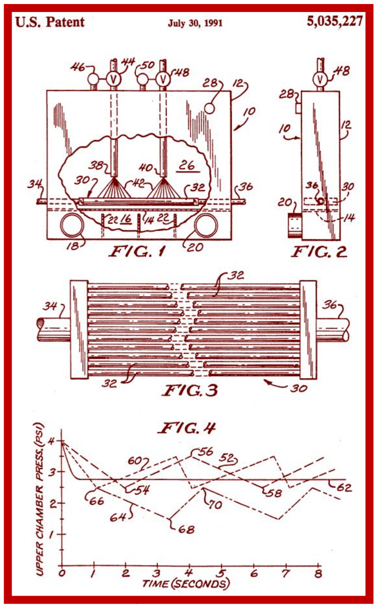

If you seek a Waterfuel opportunity that has been overlooked by the majority of the commercial Waterfuel industry, you may want to look closely at this one.

The principal opportunity is, as usual, to perform any type of action that suits your skill set, budget and choice, namely: products (***fuel to sell, fuel makers,*** etc.), services e.g. ***research, installations, consultation, teaching,*** etc. These can be financed with R&D grants, loans or self.

There are other promising niches such as HHO/Brown's Gas widely covered earlier, but this one is WIDE OPEN too, and big enough to fill its own book. It has simplicity, it's backed up by science and is very diverse in its methods, applications and the complexities/costs involved in each. So let me just give you a few strings to pull:

- The carburetor (UK carburettor) and vaporizer (UK vaporiser) are not dead. If computerized, they can even take over fuel injection. Still widely used in engines, farm equipment and fossil/alcohol driven machines. Adding water to these is easier.
- There are the old 1915/1916 water engines and their successors; look them up in several previous chapters.
- Chapter 24 is all about burning water and/or water/fuel mixes prepared by emulsion, sound waves, RF, catalysts, etc. The image on the right is from Patent WO2014064692, EP2911976, US20150274521 registered to Sonya Davidson (**H2 Energy Now, Israel** H2EnergyNow.com) akin to Kanzius/Roy etc.
- There are many more developments old and new, with potential applications in residential, farming, automotive, marine, aerospace and other industries – all waiting to be picked up and serve diverse target publics. Global market size is unknown but it's got to be in the $ trillions range.

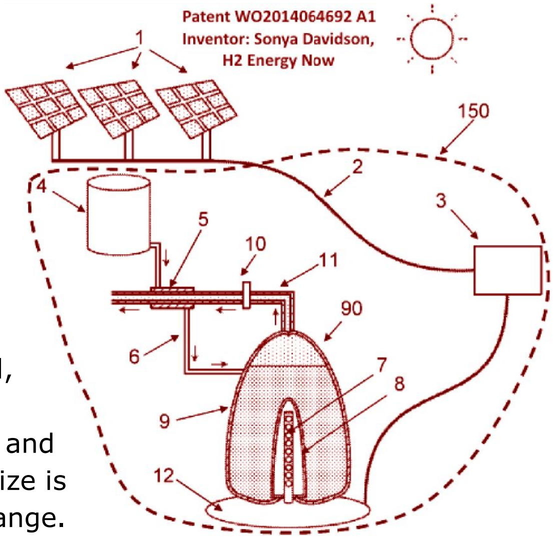

Strategic Principles

These simple but powerful principles have been used in past decades to create this plan. While you read this 37X Plan, examine how one or more of these principles have been used, and see if you can come up with ways to make it even better by implementing them again and again. So here they are, not necessarily in order of importance:

1. ***Keep it simple!*** When you make it complicated, it becomes smaller and smaller; when you make it simple, real simple, it grows, it duplicates.
2. ***Don't try to re-invent the wheel*** unless you consider yourself Nikola Tesla calibre. Please. We have age-old Patents that tell us most if not all we need to know in terms of invention. The rest is professionalism in every detail. If you try to re-invent it, think of the consequences this way: those who simply take the simplicity of Waterfuel and run with it WILL leave you far behind. Be like water – find the easiest route, even if it looks like "just a crack" and go through it.
3. ***Think LONG-TERM*** as far and as wide as you can. And then do more of that.
4. ***Canvas the entire industry.*** When looking for opportunities, partners, sources and clients, look far and wide so you have a chance to detect the connecting lines between various niches; in many cases they are linked. For example: certification from aviation projects may be useful for navy and vice versa.
5. ***Read THIS book*** front to back and back to front. Not in one day of course, but read it! Several times over. There are gems of information in every section of every chapter. If you skip over an entire chapter thinking "This is so old!" or "Here's them Russians again" then you're sure to miss out on gems that anther will detect and plug into his plan of action.
6. ***Share!***
   Decentralize!
   The importance of these factors is described earlier in this chapter.
7. Study *and implement* the principles taught by Grant Cardone in his book/MP3 ***'The 10X Rule'.***
8. When you examine this plan, ***think GLOBAL.*** Your neighbourhood is familiar and that's nice, but there's a world out there and some parts of it look – and think – VERY DIFFERENTLY from your back yard.
9. Answer all, but ***ALL the client's questions*** even in ads: what is it, what does it do for HIS industry or post, where to buy it, how much does it cost – and how much does it cost for maintenance, how is it installed, is it dangerous, how to make the most of it in terms of application, and every other question that the customer may have. And if they ask it or not, I'm telling you that you need to SHOW them your Waterfuel product or service IN ACTION before they will even consider to take for a spin. Unless, of course, somebody else has already shown them. *[If it's a video, pleeeeeese don't make videos like the ones I see too often, that answer NONE of the above questions! And look like a baby's production.]*

10. ***Keep it all perfectly legal, straight and honest*** – this is crucial for your long term success and for all of us in the industry too. And watch out for others in the industry; if they break the rules of the game thereby giving us all a bad name, attack it at once and straighten them out; if that doesn't work then report it to fellow Waterfuel players: manufacturers, distributors, clients, etc.

11. "Watch out for pseudo-prophets who come to you in sheep's clothing being predatory wolves in essence: ***you will recognize them by their fruits."*** (Matthew 7:15-23) ***You have been officially warned!***

12. Realize that the energy field has lots of greed as well as misunderstanding of priorities, leading to a dire necessity for a different business approach. For example, I've checked all the possible ways to bring a group of companies together into an association or alliance; see an extensive comparison chart at www.businessownersideacafe.com/starting_business/entitieschart.html
But none of these fits the principle of decentralization. Instead, loose and free networking can better fit the necessary communication between all players; we'll get to that a bit later.

13. ***Patent wars can drain you out,*** sometimes from quarrelling over petty monetary value. On the other hand, OPEN SOURCE is not a bad idea in general, and especially in an industry that is TECHNICALLY mature; i.e., the significant Patents of Yull Brown and William Rhodes are 40 and 50 years old, respectively, are freely available, with most newer ones being detrimental bells and whistles. [To clarify, I'm not talking about serious inventions that are listed and presented here, but about those Patents registered by companies only to add secrecy where it does not belong IMHO].

14. ***The hard work within our industry has already been done*** for over 101 years by 1000's of creators, contributors and helpers, and we now have what it takes to get the show on the road and move fast forward.

15. ***MAKE WATERFUEL REAL*** to millions of people, starting with ALL your clients, friends and contacts. Use these tools:
    - This book and its free download from www.1freedom.com
    - The DIY books/DVD (www.water4gas.com and www.eagle-research.com)
    - The learning aids from Chapter 4 – you can manufacture them and distribute profitably (royalty-free) to all who wish to promote this cause.

16. If your hire workers, your second step is to train them and TRAIN THEM WELL AND HARD. But your first step and it is CRUCIAL that you hire the ***right*** people. *Avoid the pitfalls beforehand by using the hiring know-how of Mr. Patrick Valtin.* Web: http://nofailhiring.com/ Tel: 877-831-2299. Email: info@nofailhiring.com

17. ***Don't worry about haters – they are a sign that you're getting ahead!*** Grant Cardone says in relation to 10X-level of action: ***"The right level of attention — 10X Attention — will always attract criticism and haters. While criticism is not enjoyed, it should be anticipated when trying to get your projects known. The longevity of a project is determined by the quality of what you offer; the success of your project is determined by how much attention you get for it."***

The video my cousin found on Facebook that has him wanting to quit social media.

How long until this catches on globally?
h/t Hydrogen On Demand

Thank you, Mr. Limbaugh,
for helping spread the word.
I mean it. ~Ozzie

Example: have you seen this video that's already been exposed to over 72 million people on Facebook alone? (when you're reading this it may have passed 100 million views). Last year a cousin of Rush Limbaugh, *the biggest name in USA talk show radio with 26 million weekly listeners,* sent this video to Limbaugh, who in turn hurried up and posted it on his own Facebook page, presenting it as *"The video my cousin found on Facebook that has him wanting to quit social media."*

Was this post supposed to be an expression of disgust? Because, **we should be truly grateful** for how much exposure he has added: 5,034 likes/hates and 784 comments so far, and I'll bet you there were and will be 1000's more... So he's just giving us ABSOLUTELY FREE PUBLICITY to his vast base of listeners and readers, helping to spread the word. Eventually when they see or hear something very positive somewhere, they will remember it and they'll say: ***"Of course! I've known about this already!" Which would be very true!!! Get it?*** So worry not about haters. Having haters and criticism is one of the unpleasant milestones to success. But it's a milestone just the same.

> **"When you're one step ahead of the crowd, you're a genius. When you're two steps ahead, you're a crackpot."**
> ~Rabbi Shlomo Riskin, Lincoln Square Synagogue

18. ***Give (services as well as products/quality) in abundance.*** Why? Maybe simply because there's MORE long-term money in ALWAYS giving a higher value than you are receiving? ***"The man who will use his skill and constructive imagination to see how much he can give for a dollar, instead of how little he can give for a dollar, is bound to succeed."*** ~Henry Ford

19. Do you want to build an R&D institute or a serious industry? If the later is your choice then adopt this policy: ***"FOCUS IS GOLDEN!"*** So next time somebody tells you about an exciting idea he has or heard about for a water car or something like that, ask him for a WORKING MODEL. With its full paperwork including Patent Search, costs/feasibility/etc. You may love the idea, you may believe it's very workable, nothing wrong with that. The danger is in DISPERSAL, in other words losing your focus on ***fast-forward motion.***

    To move fast forward while treating every inventor/idea man with the respect they deserve, play on both sides by telling them in the most friendly manner: ***"That's a great idea, my friend, now go bring me A WORKING MODEL."***

    However, if you're into R&D then the above principle does not apply. It is vital to also advance the science and principal development, which will then be picked up by industry.

20. Do you agree with Professor Kanarev, Joules Verne, Dr. Andrija Puharich and others that ***Waterfuel is indeed the future of power engineering?*** Or at least has a very prominent and immediate role in Cleantech? Good! Then go ahead and "Just Do It!" like Nike® says. Don't ask permission to do the right thing. Here's what Henry Ford said about that:

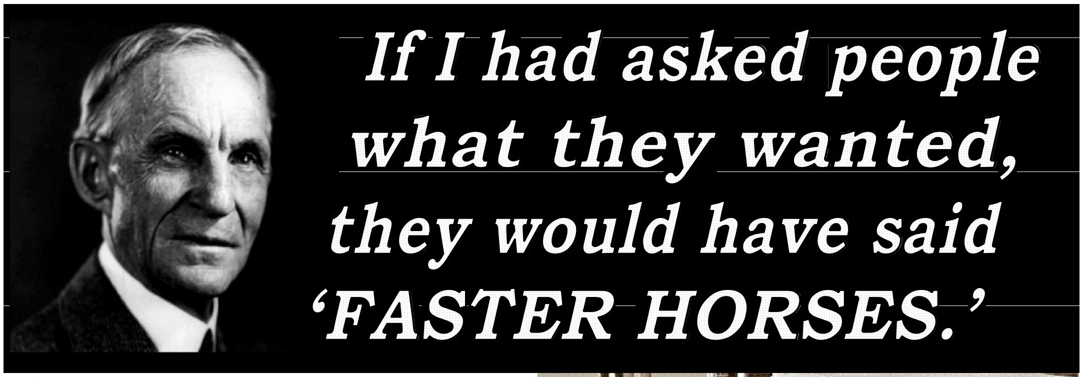

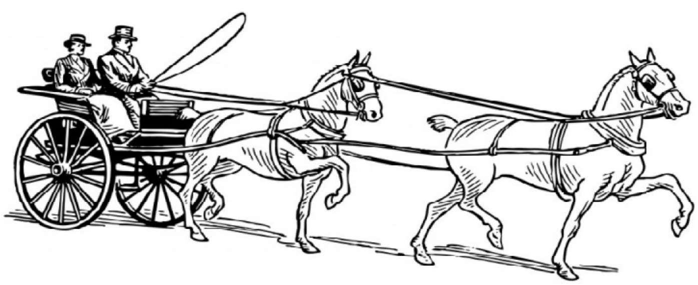

Business Ideas

SCIENCE & TECHNOLOGY: Comb this chapter and this book, especially the application and commercial product sections; look for optional opportunities, even those that seem crude and underdeveloped, and see how you (depending on your skill set and connections) can give service(s) in science and technology, namely:


Piotr Siedlecki

1. Teaching and/or authoring educational materials,
2. B2B consulting and lecturing on use/marketing of technologies,
3. Science/research, using funds from government and/or private parties,
4. Develop applications and sell as IP,
5. Manufacturing: mass, small runs, prototyping service,
6. Installing systems,
7. Product development – not just Waterfuel enhancers for existing technology such as Diesel engines, but totally NEW products based on it,
8. Providing service and/or tech support,
9. Certification services and consultation,
10. Investigate the positive health/growth benefits of Brown's Gas to the human body as well as to agriculture/farming, as exposed by George Wiseman, Song Doug Kang, David L. Gann and others.

SUPPORTING SERVICES:

11. Financial: insurance, leasing financing, escrow services, investments, accounting, banking, etc.
12. Legal protection,
13. Logistics, shipping and customs-related services,
14. Marketing, sales, web design, social media management,
15. Distribution and retail,
16. Consumables,
17. Film production for PR, educational and training purposes; webinars for same purposes,
18. Selling sandwiches to all the above (joke)
19. Seriously, there must be many more that you can find if you search deep and wide.

Forget The Past – Design For Realistic Future Demands

Overview

This section quickly goes over subjects that should and do take whole books to describe in proper detail. Yet they are vital for meeting the demands and challenges presented to the Waterfuel industry **and its clients.** In this section you will find brief overviews and links for further study.

Why Machines MUST Work Offline

The problem is not technology but people's misunderstanding of it

At this time of writing, oddly enough, two opposing things are trending simultaneously:

- IOT – Internet Of Things – is touted as the new big trend that everybody must follow. This is where everything, from a huge energy factory to a countertop toaster, MUST be connected to the internet to be "in".
- Cyber terrorism has reached both ***levels*** and ***proportions*** that we've never seen before, and some analysts say the worst is still to come.

The existence of these two trends at once agrees with neither the common sense of a 5-year old, nor the real-world experience of war veterans. The fact that nobody shouts about this discrepancy shows you how much the public and media really confront the problems of modern technology.

The solution

Like stated in the heading: "Machines MUST Work Offline". Sorry, but that's the only solution in foreseeable future. Technology has to mature first. And even more so the understandings of technology leaders, journalists and government officials alike must come to grip with reality as well.

The **warning rule/label** proposed below must be adopted by the entire industry. Doing anything else will open the door for terrorists/criminals attacking sensitive energy systems (Wait – why am I saying "sensitive" systems – they are ALL sensitive!)

WARNING!

Never, never, never connect this system, or any of its parts, to the internet!!! The offender will be shot dead! This is a deadly serious matter!

Again, ANY CONNECTION WHATSOEVER to the web, or (binary) data transfer to/from it WILL open the door to STUXNET[239]-style and Wanna-Cry[240] threats. And we don't want that. ***Not even the remote possibility.***

Additionally:

1) ALL wireless options of any kind in any equipment must be eliminated.

2) Electro-sensitive equipment must be shielded against intentional or accidental RFI[241]/EMP[242].

This is not just a design point but also must be included in how any Waterfuel-assisted energy system, whether new or upgraded from existing systems, is debugged and maintained. Installers, technicians, users and troubleshooters must be aware of (1) these rules, and more importantly (2) WHY these rules have been put in place. *Anyone telling you that there is no serious hazard should be examined for their motives immediately.*

---

[239] STUXNET: famous virus that found its way into Iranian atomic facilities.

[240] Wanna-Cry: Ransomware that hit the world in May 2017 – Google for details.

[241] RFI: Radio-Frequency Interference

[242] EMP: Electromagnetic Pulse

References for Further Study, and/or to Convince Your Bosses/Clients that You Know the Scene Well

> *"Hackers, criminal gangs and political activists are specifically targeting energy firms for financial and political reasons using increasingly sophisticated methods. This is the conclusion of research from Marsh entitled "Advanced Cyber Attacks on Global Energy Facilities" that shows the energy sector is being disproportionately targeted for attack."*

Source: http://www.cyberriskinsuranceforum.com/content/energy-sector-concerned-over-levels-cyber-threat

> *"The nature of the threat is beginning to change and companies across virtually all industry sectors have begun to witness much more intelligent and complex attacks."*

Source: https://www.marsh.com/uk/insights/research/advanced-cyber-attacks-on-global-energy-facilities.html
(PDF mentioned can be downloaded from
http://spain.marsh.com/Portals/52/Documents/Cyber%20Risk-%202014_Final.pdf)

Specific threats to ENERGY and INFRASTRUCTURE

- www.tripwire.com/state-of-security/featured/energy-security-pros-may-overestimate-their-ability-to-detect-a-breach-suggests-survey/
- http://resources.infosecinstitute.com/cybersecurity-policy-and-threat-assessment-for-the-energy-sector/
- www.dataprotectionreport.com/2015/04/energy-cybersecurity-a-critical-concern-for-the-nation/
- https://www.bedrockautomation.com/energy-sector-leads-in-cyber-attacks/
- www.v3.co.uk/v3-uk/news/2432161/talktalk-ashley-madison-and-bettys-tea-room-top-10-cyber-hacks-of-2015
- DAM SECURITY hacked by IRANIANS in WESTCHESTER COUNTY, NY: County Executive Rob Astorino says county was never told of cyber attack on dam (published Dec.2015 – about an attack in 2013)
  http://www.lohud.com/story/news/2015/12/22/cyber-attack-rye-dam-raises-concerns/77755474/
  "The Wall Street Journal, citing current and former unnamed U.S. officials, reported Monday that Iranians hacked a cellular modem in the 2013 attack on the Bowman Avenue Dam in Rye Brook."

General threat timelines and databases

- Is Your Company's Data Safe in the Cloud? (INFOGRAPHICS)
  http://www.entrepreneur.com/article/239381
- www.icscybersecurityevent.com
  "Cybercrime Is Now Britain's Most Common Criminal Offence."
- http://www.zdnet.com/pictures/biggest-hacks-security-data-breaches-2015/5/
- http://www.informationisbeautiful.net/visualizations/worlds-biggest-data-breaches-hacks/
- http://www.cutimes.com/2015/07/07/the-10-worst-data-breaches-of-2015-so-far
- http://www.thecyberwire.com/current.html

- www.databreachtoday.com/news ALL THE LATEST BREACHES… AND EVEN MORE DETAILED: www.hackmageddon.com/2015-cyber-attacks-timeline-master-index/ …AND EVEN FURTHER UPDATES FROM THE SAME DUDES (Why the mismatch? Were they hacked LOL?): www.hackmageddon.com/category/security/cyber-attacks-timeline/
- www.cnbc.com/cybersecurity/
- And it's escalating fast:
- www.csoonline.com/article/3013060/security/top-15-security-predictions-for-2016.html
- www.inc.com/will-yakowicz/5-cybersecurity-predictions-for-2016.html
- www.cdans.org/ (CONFERENCE: "Cyber Defence and Network Security 2016"), also ***"THE HACKING TEAM FALLOUT: WHO CAN GOVERNMENTS TRUST NOW? This year, Hacking Team, a well-known cyber security firm, was itself the victim of a cyber attack, losing over 400GB of confidential data that included source code, internal documents and sensitive emails"*** www.cdans.org/the-hacking-team-fallout-who-can-governments-trust-now-mc
- www.ft.com/cms/s/0/29d74218-2fb6-11e5-91ac-a5e17d9b4cff.html#axzz3vPHMXv6V
- www.isaca.org/pages/cybersecurity-global-status-report.aspx
- www.v3.co.uk/v3-uk/feature/2438545/cyber-security-in-2016-cyber-extortion-data-breaches-and-legal-reform
- www.v3.co.uk/v3-uk/feature/2437021/tailored-response-to-cyber-crime-needed-as-new-data-protection-law-approaches
- Michael Dell: "What your employees don't know about cybersecurity can hurt you": www.inc.com/inc-live/michael-dell/what-your-employees-don-t-know-about-cybersecurity-can-hurt-you.html

Additionally – we may be FORCED to adopt an unpleasant policy…

In light of this gloomy **cyber*NO*security,** rather than Cybersecurity, we may be FORCED to adopt an unpleasant policy. Some Waterfuel machines may be stand-alone welding machines or some such ISOLATED piece of equipment. But when we connect one of our machines to a vulnerable system or infrastructure, we must be aware of this potential threat and do our utmost best to prevent such a connection. Let me explain.

Imagine an HHO/Brown's Gas generator or a stack of such generators, such an array that produces flammable gas, connects to some other system. That system in this case being the consumer of gas, e.g., a boiler room or power plant furnace. The HHO/Brown's Gas equipment (generator or stack) would normally accept an input from the consuming system, when to start and when to shut off gas production. Now, if that system is cyber-attacked, the effect MIGHT be an erroneous or malfunction communication on this line.

This poses a potential threat to our equipment and even the system, ***and of course to personnel,*** that we must take into consideration. In terms of policy, IF THE CONSUMING SYSTEM IS UNSAFE CYBER-WISE, WE'D BETTER NOT ALLOW OUR PRODUCT TO BE CONTROLLED BY IT OR EVEN CONNECTED TO IT. Not electrically, anyway. We may try and apply our own workaround, for instance an internal sensor that feels a blockage, smoke or heat, etc., or a visual sensor such as camera and/or visual vibration detector. HOWEVER, ANY SUCH WORKAROUND MUST BE DESIGNED ON THE EXTRA-SAFE, EXTRA-CAUTIOUS SIDE, even at the cost of losing one client to gain others who understand the hazard.

The 3-Level Maintenance Philosophy

Why is it needed? The short answer: TCO[243]

TCO – Total Cost of Ownership (from your client's point of view) – must be taken into consideration for the long-term success of any industry including ours. Some pretend to do so. Do not follow them – if you want to be here and profitable for a LONG period of time you must take care of TCO and care for it BEFORE you care for your immediate profit.

The Three Levels

I'm so familiar with air force maintenance paradigm that I sometimes take it for granted that this IS the right philosophy, so you'll have to excuse me if the explanation is too laconic. But there's substance to it that should be studied and experienced. Either do it yourself or endow your engineers with the task of studying/testing this data.

The Air Force 3-Level Maintenance System has been declassified and published online by the RAND Corporation. The three levels can be *explained in simple, non-military terms:*

PHASE 1. ***Line:*** that's the field, the location where the machine(s) operate. At this level we find the **LINE Replaceable Unit - LRU** – which is a quickly replaceable unit that allows for minimal SYSTEM downtime.

PHASE 2. ***(Repair) Shop:*** the LRU is taken back to the shop, where it is maintained with the aim of minimal LRU downtime; this is prepared beforehand by the designing engineers; the LRU itself is modular, built of **SHOP Replaceable Units - SRUs** – that can be replaced and the LRU (after shop-level testing) is then ready for service again.

PHASE 3. ***Salvage:*** this is closer to "refurbishment" where the SRU, in a central shop or factory, is checked and repaired ***on the component level*** or otherwise salvaged (recycled).

The principles described here have been used by the Air Force for decades. Nowadays, this know-how can be found freely online. Since they have been declassified, we adopt them as our PRINCIPAL maintenance philosophy. The major parts are (links on next page):

- TCO – Complete Air Force System. A 156-page Air Force document (declassified!) titled "A New Approach to Modeling the Cost of Ownership for Aircraft Systems"
- The Air Force 3-Level Maintenance System (declassified!); a 96-page Texas Tech document titled "Reliability Growth Planning Under Performance Based Logistics"
- Our unique Hybrid Design/Maintenance Philosophy that accommodates the above Air Force methodology for the purpose of reducing TCO.

---

[243] Total Cost of Ownership

TCO – The Complete Air Force System

- Title: “A New Approach to Modeling the Cost of Ownership for Aircraft Systems”
- Authors: Kenneth E. Marks, Hugh G. Massey, Brent D. Bradley, John Y. Lu
- Publisher: Rand Corp, August 1981, prepared for the United States Air Force
- Library of Congress Control Number: 81000773 //r84
- Download:
  - www.rand.org/content/dam/rand/pubs/reports/2006/R2601.pdf
  - www.dtic.mil/dtic/tr/fulltext/u2/a104434.pdf
  - https://archive.org/stream/nasa_techdoc_20050229353/20050229353_djvu.txt
  - www.rand.org/pubs/reports/R2601.html
- Length: 156 pages

R-2601-AF

A New Approach to Modeling the Cost of Ownership for Aircraft Systems

Kenneth E. Marks and H. Garrison Massey
with Brent D. Bradley and John Lu

August 1981

Rand

PROJECT AIR FORCE

The 3-Level Maintenance System

- Title: “Reliability Growth Planning Under Performance Based Logistics”
- Author: Timothy C. Smith
- A Master Of Engineering Report submitted to the College of Engineering at Texas Tech University, 10/18/2003
- Download: http://ieeexplore.ieee.org/document/1285485/
- Length: 96 pages

Reliability Growth Planning Under
Performance Based Logistics
By
Timothy C. Smith

A MASTER OF ENGINEERING REPORT

Submitted to the College of Engineering at
Texas Tech University in
Partial Fulfillment of
The Requirements for the
Degree of
MASTER OF ENGINEERING
October 18, 2003

What This Means for System Design

This is not a lesson in system design! People go to school for that and those graduates who are truly brilliant should be hired to do system design. So this is just some basic guidance for Waterfuel systems being broken down into replaceable modules.

Computerized HHO/Waterfuel system

- Built of modules – LRU, SRU per declassified air force maintenance paradigm for lowest TCO. In practice, existing machines are re-engineered by modularization.
- Self correcting configuration: auto water refilling, auto defrost, auto current limiting (solid state fuses – physical main fuse for extra protection), auto temperature control of Waterfuel cells, auto shut-off when engine stops.
- Easy flushing and refilling with clean electrolyte.
- Connecting to the internet for remote maintenance and troubleshooting would be the "logical" thing to do, but the extreme consequent hazards have been explained. Instead, it should have no internet connection at all; its microcomputer displays error codes – the client's mechanic reports the error code ***VIA PHONE*** and gets tech support accordingly. How hard is that?

External Units

To simplify the system and allow stacking (details below) some items are external:

- Wall-mounted (or otherwise) warning buzzer/light,
- Water reservoir (or tap/sea water via water distiller and pressure reducer),
- Bubbler (if needed by application),
- Hydrocarbon/oxygen enrichment (if needed by application),
- External sensors or inputs such as Engine Pressure Sensor,
- Defrost heater (optional, self-activated),
- CRUCIAL: none of these modularity principles may break the rule of NEVER CONNECTING EXTERNAL COMPUTERS, no matter if input, output or "just monitoring", as such connectivity poses a cyber security threat.

Stackability

The role model is VANITY LIGHTS: 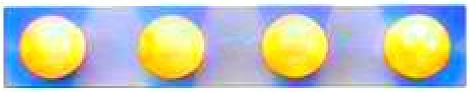 Standard light bulbs are sold cheaply, and then any electrician can "stack" them together to create a long or short "vanity light bar" that you see in theatrical dressing rooms and some homes.

Each SRU that may need stacking is designed for easy stackability. For example a gas-producing unit can output X liters of gas per minute; to make 3X we just stack two more units on top OR BESIDE IT. The principle must be to STANDARDIZE them.

Same with LRU: it is cheaper and faster to design and certify a standard unit that makes, for example, 1000 liters per hour. A second and even third unit can be installed ON SITE by removing the wheels and adding a bolt/bracket at each corner. If more units are needed, a SECOND stack is started to avoid tall "towers". The overall arrangement is made according to available space(s).

Standard hoses connect the units to a standard manifold and from there to a standard welding tip or engine/furnace/microturbine feeder – we do not need to certify any of those and they are NEVER added as part of a product TO SIMPLIFY CERTIFICATION and inventory keeping. They can and should be purchased locally when regulatory compliance is needed or required by the client.

How electric connections are standardized

- The catalog lists each LRU as being 220 volts, 110 volts, or 3-phase (different voltages?) Depending on the lab, they may be needed to certify separately. But it is best to design a machine that is flexible enough to take any power supply.
- The electric plug is NOT PART OF THE UNIT; the unit only has a panel-mounted SECURED/LOCKING socket; a short mains cable may be purchased from you or locally (www.internationalconfig.com, 30-amp "IEC 60309" www.iec60309.com which may not fit all countries at once).
- NOTE: Make sure your IEC 60309 receptacle matches marine and explosive environment certification.
- Connecting the mains supply by local electrician per local standards; do not sell power strips etc. You can provide a SHORT power cord that carries the amps needed and match the customer country's socket type. That's for convenience only, and you'd better avoid this line to simplify inventory; in such a case, you will only provide a short power cord that matches IEC 60309 on one side, and the customer will add their preferred mains plug.

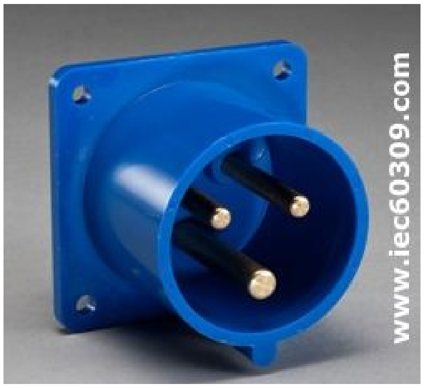

Benefits

- A resulting advantage is the ability to kill the entire stack with a single customer-provided mains switch, whether integral in the power strip or external/remote.
- IMPORTANT: each stackable LRU, if computerized, is pre-programmed to act as either MASTER or SLAVE. Naturally, there could be only one master in the stack.

LRUs at Customer Level

- Box (entire machine)
- External Water Reservoir and/or Distiller (provided by customer)
- Engine/boiler/furnace sensor (must be normally-open!!!)
- Error buzzer/light.

SRUs

- HHO cell including its own temp sensor, on separate connectors and quick-connect hoses
- Power Supply (optional – if powered by generator's 110/220 volts, or mains) – may be unnecessary if stacking cells to work on rectified 110/220 volts, in which case the current limiter must work on 110/220 volts as well (PWM activates a TRIAC device)
- Water reservoir including its internal float valve (quick-connect not a must because it's not going to be replaced frequently)
- Water refill pump (may be a simple valve if the reservoir is on top)
- Defrost heater (optional, better be external and self-activating)
- Cooling fan(s) if necessary
- Main fuse (may be combined with IEC 60309 mains receptacle)
- Master kill switch (may be combined in IEC 60309 mains receptacle but it's better to make separate *and easily accessible)*
- Water enhancers (if any) and hose set
- Pressure gauge
- Housing.

Tech Support Systems/Methods

Provide TECH NOTES

Customers should get, frequently and with every new shipping, the entirety of tech knowledge and methods that have just been discovered or developed. Tech notes reveal the entire tech in enough detail to let the customer do full replication, and the ONLY reason they don't do that is price and convenience, because we do it faster and cheaper.

While it's true that this may seem to break the American HHO/Waterfuel market, it opens many new profit possibilities, while helping struggling economies including the American one. Current manufacturers of HHO/Waterfuel equipment can switch to local support and distribution; the problems of missing quality control and communication difficulties with Chinese industry have just been solved.

There’s no guarantee that everything will be perfect overnight, neither in quality nor results. The point is not perfection but sharing knowledge and experience so that finally the quality will rise, step by step. Since the basic technology is already here, this will happen much faster than the advent of radio, TV and music recording. Some patience and persistence will prove profitable. Time expectancy: 1 year to a stably growing market.

Additional points

Systems are not improvised by amateurs. Each LRU and each SRU must have its proper place in the system, its own design – with professional documentation and its position in the overall philosophy and history (record of models, versions, bug fixes, etc.)

Tips from George Wiseman’s experience for the proper design of professional HHO/Brown’s Gas Generators

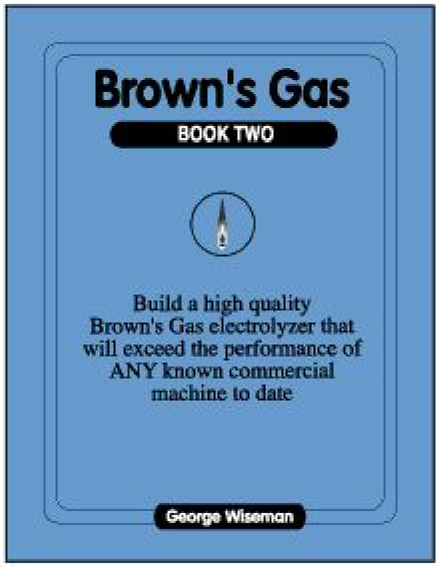

Brown's Gas

BOOK TWO

Build a high quality Brown's Gas electrolyzer that will exceed the performance of ANY known commercial machine to date

George Wiseman

- www.eagle-research.com/browngas/machine/erseries/er1150/erserie1.php
- www.eagle-research.com/browngas/machine/bnseries/bnser1.php
- www.eagle-research.com/cms/store/browns-gas/browns-gas-book-2
- www.eagle-research.com/cms/resources/browns-gas-book-2
- BROWN’S GAS BOOK 2 CORRECTION: Page 59 in the schematic put the left hand lead from T1 to the left of C1 (on the P1 side).
- www.eagle-research.com/cms/browns-gas-book-2-resources/browns-gas/products/browns-gas-book-2/bg-book-2-parts-supplies
- www.eagle-research.com/browngas/machine/homebuilt/homebuilt.php
- CRUCIAL SAFETY & QUALITY TIPS: www.eagle-research.com/cms/browns-gas-book-1-resources/browns-gas/commercial-brown%E2%80%99s-gas-electrolyzers-vs-diy
- www.eagle-research.com/cms/faq/browns-gas/browns-gas-combustion-enhancement/q-what-mmw
- Cheap capacitors (for experiments only): www.surpluscenter.com/electrical/capacitors/motor-run-capacitors/

Beyond TCO: Go Negative!

nEGATIVE cOST

This article was posted by "Prof Bruce" on the Urban Dictionary www.urbandictionary.com

A client when buying your product or service can experience a negative cost if the benefits from using your product or service are greater than its cost. A negative cost can also result from a reduction in their costs from the use of your product or service that is greater than the cost of buying the product or service from you or it may result from some combination of higher benefits and lower costs.

Negative cost selling is all about understanding your client's business from their point of view and being able to measure the benefits you create and the cost reductions you cause.

"A minor soccer team organizer approaches a professional team for a donation to help with their upcoming tournament. Instead of just giving them money, the pro team gives them tickets at a discounted price (say $25 each) which they in turn sell at full retail price (say $45 each). They keep the difference. Their cost for each ticket is a negative cost, i.e., -$20. This also turns all the local minor sports teams, the players, their moms and dads, grandmothers and grandfathers into a new sales channel for the pro team which helps to fill their arena or stadium. It also teaches the kids about entrepreneurship and self-reliance and they come to understand the maxim: 'Give a person in need a fishing rod, not a fish.'"

Image: George Hodan

How does the concept of ***nEGATIVE cOST*** apply to Waterfuel? I think you can figure it out. From our latest calculations, a system costing $10k that lasts for 20 years but pays for itself in fuel saving alone (although we indicate more benefits to the customer) in a matter of three months or so, leaves nearly 20 years in free ownership. This is as close to ***nEGATIVE cOST*** as an industrial system ever gets.

Toughen it Up – Certification

Today's Standards are Shabby at Best

Some Waterfuel manufacturers will not like this said about them. Many of them have adapted firm policies of high standards and professional certification. So I apologize for hurting anybody's pride. However, the majority of the industry, mainly in Asia today – THE MAJORITY BY NUMBERS not by quality – holds very little sacred. Let me tell you what I have discovered when I "spied" on one manufacturer with very prominent presence in marketplaces such as Alibaba, let's call him 'Johnny'. All I used for "spying" on Johnny was Google, ten fingers on the keyboard – and information provided by Johnny himself on his impressively designed website.

At first glance Johnny seemed to be the strongest Chinese manufacturer with many machine models, Certifications and Patents. However, I found out that Johnny provides semi-fake and VERY WEAK certification. For example:

- His "SGS Certificate" was never even seen by SGS labs, not to mention tested,
- His European "CE certificate" comes from an Italian company that seems to have never tested it either according to their own clearly worded statements on the "certificate" and one their website,
- Furthermore Johnny added insult to injury by faking the Italian certificate. He did so by adding many models that the Italians are not even aware of *according to their certificate-verification website.* Let me explain. The Italian certificate (as posted on Johnny's website) gives you a link back to their website, to verify that this is indeed from them; the original certificate was indeed there; but it had too many model numbers which made it suspicious already – how many models were sent to Italy to be checked (come to find out, none) so I dug deeper and compared the model numbers one by one – there were many more models on Johnny's "copy" of the Italian certificate than the original. I have the two copies; the dates, double hand signatures and document IDs are all perfect matches – so they should have been identical in content, too.
- I contacted that same Italian certification body and asked for a quote to get our machines certified with them. The Italians were super fast to answer: "2,500 Euro". Which is too cheap and too fast to be serious because any other European certification body such as SGS Labs or TÜV Rheinland would charge at least 10 times that much and will not quote you before extensive questioning and answers provided, and even then the actual cost may be 50-100% higher due to changes requested and re-testing, not to mention the costs of shipping back and forth, design changes, and time (you will lose sales in the meanwhile).

  So what did Johnny save by faking a "certificate" that was semi-fake already? A mere 2,500 Euro that he could have acquired from the next couple of sales.

- Another prominent manufacturer from the same district in China, let's call him Johnny's neighbour, claimed online to have a CE Certificates from BCTC (that's BCTC Technology Co. Ltd located in Shenzhen) but checking with the lab's website www.bctc-lab.com/en/ found nothing on Johnny's neighbour.

Bottom line: Shabby. This is not how an industry can expect to expand fast, or expand at all. On the contrary – this is a surefire way to stay small and eventually shrink into oblivion. It gives us all a bad name. Johnny and his neighbor reading this now know who I'm talking about and they should corrected their ways or stay a long way behind the curve.

It must be noted, though, that this is NOT the case with everybody in the industry. Right now there are several ethical companies such as Eagle Research (Canada), Epoch Energy Technology (Taiwan) and others who are making excellent products and truthful reports about what they offer and what they don't.

Recommended Certification

NOTE: Nothing cheap here! But worthwhile in the long run.

SGS (Swiss-Headquartered): Product Certification for International Markets

The "CE" marking is necessary in order to export goods to the European market, and is relatively easy and cheap to get (or fake); the standard practice in the industry today is to get a CE certification that's done in-house or by a cheap no-name lab elsewhere. We simply cannot do that if we're to advance the industry with top-notch quality and worker safety.

Therefore, top-notch certification institute SGS (www.sgsgroup.com) has been chosen to perform certification of products for international markets. I recommend that you start by locating your nearby branch of SGS and get a quote from them; ask for availability because often they could be booked for a while. What SGS can definitely do for you:

- ATEX Certification and IECEx Certification of Equipment
- EC Machinery Directive, 2006/42/EC.
- AS 9120 – Quality Management Systems for the Aerospace Industry (future adaptation of this technology).

TÜV Rheinland (German-Headquartered): Product Certification for Germany and European Markets

Your nearest branch of TÜV Rheinland Ltd can be located here (www.tuv.com/en/corporate/configuration_cw/locationdetails_cw_18573.html). They can perform similar certification of your products for international markets. The purpose is to have more certificates, and this one is another top-notch certification institute especially targeted at the German market but respected worldwide.

CSA Group (Canadian-Headquartered): Product Certification for North American Markets

CSA Group is recognized and accredited in Canada and also in the USA by the U.S. Occupational Safety and Health Administration (OSHA), which lists them as a Nationally Recognized Testing Laboratory (NRTL); this enables them to test your products against the U.S. standards written or administered by top institutes including the American National Standards Institute (ANSI), Underwriters Laboratories (UL), CSA Group, NSF International and other organizations.

Your products do not need to ship back and forth to Canada for certification, because CSA has a certification lab nearby in Shenzhen (located in Zhuzilin, Futian District www.csagroup.org/china/locations/) and other locations. If you're like me located in Hong Kong, the trade and customs agreements between Hong Kong and China make it easy and fast to get certified for North American markets.

National Academy of Sciences in Kharkov, Ukraine

This is not the Kiev headquarters but their branch in Kharkov (photo) called ***Podgorny Institute For Mechanical Engineering Problems*** that specializes, between other things, in testing Diesel engines under the strict Russian standards, as well as technology for the conversion of 4-stroke Diesel engines to gas engines. Their expertise is very high and prices very low (if you work in dollars, GBP or euro).

They will not certify your product as far as safety and general quality, but instead will document the LONG-RANGE DURABILITY OF A DIESEL ENGINE ***including efficiency, metal durability and oil health*** when supplied with HHO/Brown's Gas. Testing will be performed for 400 hours (or the next level which is 1000 hours) per the tough Russian standard "GOST 18509-88", including repeated oil tests in their science lab; they will also overhaul their Diesel engine at the end of the 400 hour/1000 hour run – which would reveal any changes/damages that the oil tests may have missed.

Again, this is not certification but a "gate opener" for the Russian-affiliated markets such as Russia, Belarus, Kazakhstan and Ukraine to name a few.

THIS IS ONLY AN EXAMPLE. Similar tests can be sought for other non-Diesel applications such as boilers and coal-fired furnaces, turbines, etc. The idea is to give yourself and your customer the knowledge that their equipment is safe from long-term damage.

Notes

GOST in Russian mean 'norm' and it's the umbrella name for many testing standards. The western equivalents will be found under standard sets such as DIN, ISO, ASTM, STE, etc. but we could not find a one-to-one correlation list that I can give you. If you want to go the extra mile and provide such certification, ask your preferred engine-testing lab that has official accreditation (international or at least accepted by your target market). Ask for 'engine durability test' and it should be similar in the sense length of up to 1000 hours. By the way neither 400 nor 1000 hours are run in one continual tests, it can be several hours a day or a week if the lab can only do so much.

Equipment

Other than your certified HHO/Brown's Gas generator, of course, you will also need to know how much gas you are providing the engine/furnace with. Measuring gas flow can be done by primitive methods found on YouTube. But if you want to be accurate and professional, the perfect tool for the job is the instrument shown here. It is a 'Flow Meter' from Alicat Scientific (Arizona, USA) specially calibrated for measuring HHO/Brown's Gas. I will not give you the exact model because it varies by the amount of flow per minute. Locate the nearest Alicat distributor at www.alicat.com/about-us/distributors/ and consult with them and the Alicat catalog.

ISO-9001, ISO-14000:
To ISO or Not to ISO – that is the question…

Document Title: "ISO 9000: An Ineffective Quality System"

Authors: Chris Heffner, Steven C. "Swede" Larson, Barney "Tim" Lowder, Patti Stites

Download: http://asq.org/learn-about-quality/iso-9000/overview/is-it-worth-it/iso-9000-ineffective.html (headquartered in Milwaukee, Wisconsin, USA, ASQ provides the quality community with training, certifications and knowledge)

ABSTRACT: ISO 9000 was originally published in 1987 by the International Organization for Standardization (ISO), was then quickly adopted as the premier standard to ensure uniform manufacturing and auditing processes. But even after major and minor revisions, the program is often criticized as ineffective for a wide variety of reasons:

- **Overemphasis on inspection** rather than encouraging real improvement,
- **Questions of safety;** examples given of Chinese manufacturers being certified to ISO standards yet making low quality, sometimes hazardous products/food; another notorious case was the Bridgestone/Firestone tire, that fell apart and caused accidents despite being ISO- and QS-9000 certified,
- **"Not a True Quality Program"** – according to Krajewski and Ritzman (1999), ISO-9000 is a set of standards governing the documentation of a quality program, not a true quality program as many organizations are led to believe. ***In other words, quality to the client is not realized.***
- **Administration and control** – rigid documentation restricts creativity and focuses on much paperwork rather than true quality,
- **Required for basic survival** – government and other large organization mandate ISO certification, thus the incentive to conform is not increased profitability or long-term, continuous improvement, but rather basic survival; however the average cost of certification ($245,200) does not lead to financial benefits; in other words – too expensive,
- **Employee and customer impacts** – employees had less control or participation in decision-making, causing less employee motivation and less organizational learning – as well as neglecting customer satisfaction in the process,
- **Relationship with quality award programs** – the ISO certification process focuses more on audits, whereas the award requirements focus on wider issues, such as leadership and results – and even then, both are NOT based on customer satisfaction from the customer's point of view,
- **Lack of management support;** a research of 146 organizations found failures in establishing adequate monitoring/compliance/management commitment.

The authors' conclusion is that ISO-9000 has failed on the promise to achieve quality and safety improvement, or increased profitability.

The Quality Promise

Another factor I noticed when trying to implement the latest ISO-9000, was that audits were expensive and time consuming (extensive documentation and adhering to ISO standards even when company policy and unique customer needs may require otherwise). But even then, suppose you've passed the yearly audit with flying colors – then what? You have a certificate on the wall and on your website, yet this certificate could be "valid" but up to 364 days old! What has happened to the organization since last year? A whole lot could have gone wrong yet your certificate would not reflect any of that.

A different approach should be developed and adopted.

Instead of wasting money and attention on documentation and audits, some companies have adopted the QUALITY PROMISE approach. This would include policies that look inward into staff performance and also – and primarily – into customer satisfaction.

The Quality Promise, then, would be the declaration of adhering to such policies, showing the customer that testimonials from happy customers are not a result of chance but stem from adhering to firm policies and hard work by everybody in the company, not just those who come in contact with the customer.

Example

We'll use 'Acme Water Injectors' as an imaginary company that sells aftermarket water injectors for speedboats. Their Quality Promise may look something like the statement below – and you're welcome to copy and adapt it to your company. *But* ***remember that warm words are worthless without real quality delivered to your customer. Therefore such a statement must be accompanied by actual and truthful certificates of safety and quality from the accredited bodies listed above, or similar.***

Acme Water Injectors – Quality Promise

Acme Water Injectors is proud of its achievements in the areas of quality implementation, enhanced safety and customer satisfaction programs. In keeping with the goal of continual improvement, Acme Water Injectors has adopted the following Quality Promise:

- **Customer Satisfaction First**: Acme Water Injectors' managers, employees, sales reps and distributors will take customer satisfaction as a priority. Our motto is that we produce happy customers, not injectors and dollars.
- **Value**: Acme Water Injectors will ensure that the products and service we provide impact your business and your clients positively, from the aspect of true financial and safety values. Additionally, Acme Water Injectors will continue to offer a variety of free information and services in order to promote the speedboat industry and enhance workplaces. Acme Water Injectors will only provide products and services that are useful to our clients, improve their business and profitability as well as team safety and environmental impact.
- **Quality**: Acme Water Injectors will provide the highest level of quality to its clients, by certifying each and every injector to conform to the highest quality and safety standards, and then by analyzing each client's needs and providing appropriate service to fully satisfy those needs. Acme Water Injectors will also deliver its products and services at minimal burden on the client's time and with minimal interruption of client's work/racing schedules.
- **Ethics**: Acme Water Injectors will build total client confidence by avoiding conflicts of interest, by providing truthful and accurate advertising, and by continually striving to improve the speedboat industry through good works and professional responsibility of each and every employee, manager, sales rep, distributor and mechanics. All employees and subcontractors of Acme Water Injectors are required to sign a contract to abide by the ethics and quality standards set forth by this Quality Promise.

A Proposed Business Plan that You Can "Steal" and Adopt

I wrote this Business Plan and I'm giving you permission to "steal" and use it. ~Ozzie Freedom

Overview: Why This Business Plan is Necessary

Nowadays Waterfuel is being used on a small scale for light-duty transportation – and there are established companies doing it well. But in the professional niches of industry such as boiler rooms and power generation, as well as heavy-duty transportation such as marine freight, railroad and earth movers, we found not even one company doing it right. Waterfuel machines offered by other companies suffer from several ailments:

- Quality suffers so greatly that you can count on one or two fingers the number of quality manufacturers in each top industrial country such as Korea, India and China. And even those top few are behind the curve in terms of scaling it up to meet the world's realistic demands and needs.
- Safety is sub-par; the various hazards to workers and equipment are not taken care of by system designers and providers, thus limiting application range.
- Certification, in the vast majority of cases, amounts to paperwork from unreliable sources. Certain necessary types of certification are commonly ignored in this niche.
- Long-term ownership is prohibitively costly, both in terms of energy costs (electricity too, not just fuel), downtime and maintenance philosophy.
- Nobody teaches the proper way to do these things (system design, machine design, manufacturing, long term service, and business ethics as it relates to this industry) and even the sub-par designs and sub-par procedures are mostly kept secret.
- System design is cumbersome, causing large-scale solutions to be costly and time consuming with customers having to wait weeks or months for delivery. Cumbersome design inevitably costs the client in shipping costs, inventory of spare parts (if any are even offered), business lost for troubleshooting and downtime.
- In general, millions of professional clients await solutions to high energy bills, but would not believe that Waterfuel is real, safe AND affordable. ***And frankly, their disbelief is somewhat correct in light of the above ailments.***
- As a direct result of these ailments, the Waterfuel industry has not progressed half as fast as it should have, and is lagging far behind its Solar and Wind sisters.

Furthermore, very few entrepreneurs think ahead of the curve to come up with solutions beyond the obvious, namely:

- To teach economy leaders that the worsening WATER SHORTAGE is basically only an ENERGY SHORTAGE – and that Waterfuel can help without delay.

- That Waterfuel's unique qualities can be used for diverse industries far beyond the notion of "water engines" – for example its CLEANLINESS can be used for sealing medical/cosmetic ampoules, and its higher safety for workers can be used in mines and cruise ships WITHOUT replacing existing Diesels. And clean the output of tens of thousands of coal/heavy oil burning facilities.
- We're not aware of serious low-cost offers to save power/boiler facilities from forced shutdown due to their environmental impact, despite tightening regulatory push.
- Not enough has been done to integrate Waterfuel with other Cleantech such as Heat Storage, Solar, Wind and Tesla.
- The know-how accumulated by this industry in the passing century can be used to develop new markets shortly without inventing new technology.

Business Philosophy

Waterfuel is a growth industry – a Cleantech niche that grows alongside Solar, Wind, efficient motors, etc. The clients of our manufacturing division are end users of the technology, namely factories and other professional users. We sell them machines and/or enhancements to their machines and power plants. Technically, our business philosophy focuses on these major principles:

- Our customer's TCO – everybody wants to save fuel costs, which we deliver – but we can also help them save extra on DOWNTOWN and when applicable also eliminate POLLUTION PENALTIES / CARBON TAX; focus is on the professional buyer's point of view: ***innovation, excellence, and above all lower TCO.*** *In this context, TCO not only of our add-ons but the TCO of their energy facilities.*

- We stress the highest standards of quality and SAFETY – both for client's employees and for sensitive environments (explosive and/or marine environments) – certified by top testing and certification bodies.
- Our long-term business philosophy is to teach and consult FROM HANDS-ON EXPERIENCE thus recruit help (to boost the niche industry) without the hassles of hiring and paying the large manpower needed. In other words, we expand through teaching PRACTICAL, FRESH, FIRSTHAND know-how.
- Our students establish satellite companies and work alongside us to expand the industry while providing us with feedback from their endeavours that we can
  (1) help them solve, and
  (2) teach other students, new and old alike, the newly acquired experience for the benefit of all.

Sharing Philosophy

We believe that this is THE plan to revolutionize the entire Waterfuel industry. It is based on four decades of experience and deep-reaching hands-on and legs-in experience in the depths, highs and lows of this industry.

But why share what we believe to be a multi-trillion-dollar opportunity? Several reasons:

- Because, in the energy industry at large, it is very dangerous to be a LONE opportunist no matter how genius. Having many players builds mutual protection which is worth more than a theoretical trillion dollar.

  Examine the history of this industry; read the stories about Stan Meyer, Daniel Dingel, Paul Zigouras, that famous Japanese water car and many others. For some reason they could not or would not share their discoveries with the world, and ended up dead or forgotten, their work wasted. Look, even the great Nikola Tesla, lacking what we know now about the true nature of suppression and lacking the Internet as a medium of sharing, ended up unfunded, humiliated and his know-how dormant for a century.
- This operation must be global and benefit everybody on Earth no matter how “lazy” or “unimportant” a cynical business world thinks they are. *Because what’s the point in earning alone now and give our grandchildren a million or a trillion but no air to breathe??? We can’t breathe dollars and neither can they.*

Three Divisions

Based on previous experience in most fields of developing, manufacturing *and training others to do the same,* our activities divide into three distinct divisions:

1. ***Machines Division*** – manufactures and delivers products (HHO/Brown’s Gas generators), with help from China and especially its Pearl River Delta (PRD) zone. Even though we plan to sublicense our know-how, this Division will never stop making and delivering products in order to never lose touch with new trends and industry challenges.

2. ***Academy Division*** – sells and sublicenses our know-how in such ways that establishes satellite companies who quickly expand the niche industry thus helping China and Hong Kong strengthen their economies and global leadership. We do not consider such satellites ‘competition’ but students, and we will take steps to ensure they cannot harm the industry by lowering its reputation or its ethics. Their main contribution back to us, other than their initial pay for the knowledge, will be to make the technology so well-known that everybody will profit/benefit.

3. ***Development Division*** – assists entrepreneurs of sister Cleantech niches to achieve similar success. This is another source of income that also helps China and Hong Kong, while at the same time fills a real market need. It combines the knowledge, experience and reputation of the first two divisions.

We Rely on Science

For example, in their 2000 report titled ‘A Shocking New Pump,’ NASA scientists (Marshall Space Flight Center did the engineering project) validated and explained James Grigg’s water cavitation heat pump, and ended it with the following statement: ***“The advantages of the technology used in the HPump can be applied to many industries.***

There are current uses for it in pulp and paper, petroleum, chemical heating, and environmental cleanup industries. Hydro Dynamics also sees future applications in developing combustionless heating through the use of wind power." So now when we approach industry leaders, business owners and entrepreneurs with the initiative to use/teach/finance industrial use of this tech, we have this scientific validation (as well as many other) to back up our initiative.

Focus

- Industrial and heavy transportation markets only.
- ***No new inventions*** – while others are trying to invent new technology, we use old but well-tested technology to go deep and blaze a trail into the heart of several industries and professions. We innovate in terms of easier system design, maintenance and service. For manufacturing we go with the new trends of Chinese factories modernization and speed (robots, 3D printing, etc.), but we leave manufacturing innovations to them because they do it better and faster. All our major manufacturing will be done by highly professional factories in Pearl River Delta (Shenzhen) due to physical closeness, but we are aware that our students can take the know-how and manufacture in other places such as Changsha (Hunan district), Gyeonggi do (Korea), Kaohsiung (Taiwan), Bologna (Italy) or any other industrial zone of their liking.

Image: Industrial robots from ABB Robotics installed in Asia by ICAPlants from Latina, Italy (illustrational)

- To keep our ultimate focus, we even refuse tempting offers to jump into new R&D beyond what we have already developed to fulfil our mission. Instead, we meet each such offer with a counter offer to inventors and entrepreneurs: "Bring us a working prototype and complete blueprints – and if we like it we'll provide you (for a fee) with two things to strongly support your invention, namely:

  1. The BEST FACTORIES and how to collaborate with them, and
  2. A Sales Force eager to sell new products for you.

- Another factor to keep our focus – we use our Indie Sales Force which takes most of the marketing burden off of our R&D and Tech Support staff, for a generous share of sales profits. To be truly effective, the duty of training the Indie Sales Force on all aspects of sales, business, promotion and business ethics, has been put in the hands of Mr. Grant Cardone mentioned earlier, via his Cardone University http://cardoneuniversity.com/ and other training venues (books, MP3, seminars).

- We introduce DECLASSIFIED know-how from the Air Force to boost our industry to its maximum capabilities.

Growth

Clients of our Academy Division are those who wish to profit from this growth niche while helping the environment; they come to us to learn the science, the technical innovations, our marketing philosophy and much more – so they can set up their own successful Waterfuel operations in their country of origin or any other country. These satellite companies contribute to the progress of the entire Waterfuel Industry – because "a rising tide lifts all boats."

Our leading principle is to serve many clients and help the Waterfuel industry expand as fast as it should – while staying lean, agile and fast-moving. To implement this principle, we are a regular commercial company (for-profit, nongovernmental and independent) in HK, to take advantage of closely related powers: China's ***manufacturing power*** and Hong Kong's ***top-standard certification labs,*** and ***fast commerce/banking lines.***

Unlike the average standards of the industry (at this time of writing), we take quality and tough certification to their utmost levels of professionalism, honesty and long-term success calculations. We make it personal, an inner pride and 100% conviction in our product and service aimed at customer benefits and satisfaction. This is our top principle and together with SPEED OF ACTION that's our best safeguard from adversary and criticism.

We therefore anticipate exponential growth driven by ever increasing customer satisfaction carried mainly by word of mouth.

END OF INDUSTRY-LEVEL BUSINESS PLAN
(Principal and preliminary, borrowed from WaterfuelPro Limited, Hong Kong)

The last section provides:

- ***'Your Detailed Business Plan'***
  A one-page briefing on how to create a business plan, for those readers who are doing their first steps in business,
- ***'Basic Business Plan for Joe's Carbon Cleaning Mobile Service'***
  A sample home-based business plan based on the carbon cleaning idea,
- ***'Expansion Resources'***
  A useful list of resources for business setup, mass production and mass marketing.

Your Detailed Business Plan

Your chosen NICHE MARKET and SIZE will determine the details of the business plan you should develop, so I'm only going to give you tips and pointers to relevant data. To make a detailed plan, if you're not familiar with it already, just Google [free business plan template] and find lots of free ones in text, spreadsheet and presentation formats.

Two sources that I liked and learned from were www.bplans.com and the many free samples provided by www.thefinanceresource.com/samples.aspx, from which you may choose the Welder/Welding Supply/Service Business Plan – download this free sample (or any of the others) aimed at organizing your business ideas/data and then raising capital from investors, banks, or grant programs:
www.thefinanceresource.com/free_business_plans/free_welding_supply_company_business_plan.aspx

One quick and automated way to start an investor-ready 3-year business plan is https://enloop.com/ where they even give you an automatic score for how good and realistic your planning is.

The points that should be covered in your plan, even if shortly, are listed below. Hints for your detailed plan are given throughout this book from the perspective of this 37X plan and the broad view of Waterfuel opportunities; some immediate, some projected.

1.0 Executive Summary

1.1 Products and Services
1.2 The Financing
1.3 Mission Statement
1.4 Management Team
1.5 Sales Forecasts
1.6 Expansion Plan

2.0 Company & Financing Summary

2.1 Registered Name & Corporate Structure
2.2 Required Funds
2.3 Investor Equity
2.4 Management Equity
2.5 Exit Strategy

3.0 Products and Services (describe them)

4.0 Strategic and Market Analysis

4.1 Economic Outlook
4.2 Industry Analysis
4.3 Customer Profile
4.4 Competitive Analysis

5.0 Marketing Plan

5.1 Marketing Objectives
5.2 Marketing Strategies
5.3 Pricing

6.0 Organizational Plan & Personnel Summary

6.1 Corporate Organization
6.2 Organizational Budget

7.0 Financial Plan

7.1 Underlying Assumptions
7.4 General Assumptions
7.5 Profit and Loss Statements
7.6 Cash Flow Analysis
7.7 Balance Sheet
7.8 General Assumptions
7.9 Business Ratios

Basic Business Plan for Joe's Carbon Cleaning Mobile Service

DISCLAIMER: Joe is a non-existent person and this plan is for educational purposes only.

Executive Summary

For the past 25 years Mr. Joe Bloe has been a successful car mechanic in Tarzana, California and now wishes to move to Encino, California. In the past 3 years Joe has been trained and specialized in imported and domestic luxury cars. His career goal is to be able to retire in Encino after developing and selling the Carbon Cleaning Mobile Service that he is planning to start. His target market are local residents with high-end cars and also classic cars that they would like to preserve in pristine condition *without modification.*

Carbon Cleaning with Brown's Gas is an emerging business opportunity with little competition in the Encino, Sherman Oaks and Studio City area. Joe is certain that with his mechanic's license and 25-year business experience he can develop a new mobile service based on this existing and tried technology, starting with a $12k business loan to become profitable within 12 months, and sell the business within 5 to 7 years with enough savings to retire in Encino.

Requirements in Space and Equipment

- Carbon Cleaning Machine: 1 Brown's Gas Generator, $10k from Company X, address Y,
- Hook-ups (hose, extension cable): $200
- Consumables: distilled water, $10/mo. and catalyst, $10/mo.
- Tools: Joe has his own mobile tool set,
- Dedicated Vehicle: Joe will purchase a $1,000 minivan (either a Toyota Yaris 2004, a Dodge Caravan 2001 or a Saturn Vue 2005). For the average business these are too old but Joe is certain that his experience and parts sources will suffice to keep this vehicle running smoothly before he can upgrade from future profits,
- Licensing: Joe already has a mechanic license registered in the State of California's Department of Motor Vehicles; the annual fees to register a mobile mechanic business are $300 to the Department of Motor Vehicles, $250 to the City of Encino and $250 to the City of Los Angeles, *{these are invented fees for the sake of discussion}*
- Space: not required, since the business will all run out of the vehicle that will contain all tools and consumables needed to reach clients and provide services,
- Total Required: $12k

Location

Joe will work from home or garage in Encino. He will run his business exclusively out of the vehicle where he will keep the cleaning machine, the hookups and consumables.

How this investment will pay for itself

- 20-40 minutes cleaning service per vehicle
- Plus 10 minutes for hook-up, collection, etc.
- Assuming total work 45-50 minutes/vehicle on the average
- Assume an average of 1.5 vehicles per location
- Average drive between locations: ½ hour max. because most customer visits (going out to them) will be outside of rush hours
- Daily Total: 11 vehicles x $75 = $825 gross profit
- Monthly total: $18.3k gross profit, excluding transportation overhead.

The monthly gross profit, *even if at first only 20%* of the $18.3k of normal operation, would be $3,600

Hence, with the first month's revenues Joe should be able to start payments on a new minivan, as well as start paying off the $12k loan.

Yearly Income

Assuming low-cost expenses on the vehicle due to Joe's ability to keep the old and the new minivans running at top condition, the yearly gross profit would be:

- $18.3k x 12 mo. = $220k
- Overhead 25% = $55
- Bring home: $165k annually on the average.

Assuming 30% yearly growth starting from 50% of that average, Joe's business yearly net income is projected to be: Year-1: $83k; Year-2: $108k; Year-3: $160k; Year-4: $180k; Year-5: $220k.

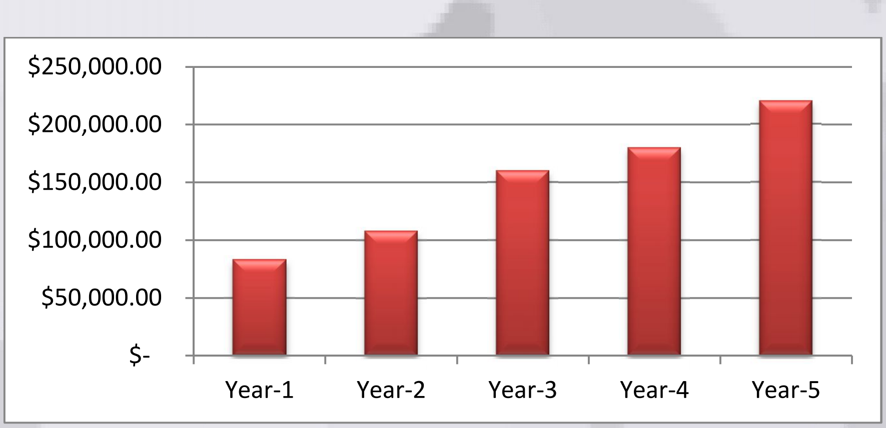

Exit Strategy

Mr. Joe Bloe expects to pay off the business loan within _______ months. At the end of Year-5 he will consider selling the business or keep running it for two more years before selling and retiring.

Expansion Resources

Why I think Hong Kong is THE Spot

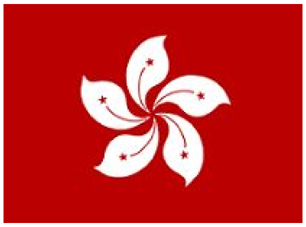

- TRUE SUPPORTIVE ATMOSPHERE: Government support for companies includes free office space, business support services, loan schemes, and the general attitude is supportive and inviting rather than greedy.
  Check out www.gov.hk/en/business/supportenterprises/funding/ - and http://www.investhk.gov.hk/why-hong-kong/government-support-for-companies.html
- "THE WORLD'S FREEST ECONOMY" because taxes are simple, predictable – and nearly the lowest in the world (rivaled by only UAE and Qatar according to Forbes Magazine): 16.5% profit tax, 15% salary tax, no sales tax, no VAT, no dividends tax, no capital gains tax. Business insurance rates are very low, too, either via Bank of China or private corporations such as CCW Global (contacts provided below).
- STRATEGICALLY LOCATED next to "the factory of the world" but still outside (thus "cosmopolitan") and geared for doing business in Asia and elsewhere – with the extra benefit of "Made in Hong Kong" branding (if you locally add >25% in parts/labor).
- Political stability, pro-business government, strong rule of common law (thus good internationally accepted commercial arbitration), transparency and free flow of information. Safe weather, stable electric, security, low crime rate.
- HONG KONG IS A FREE PORT. It has no barriers on trade, levies no tariffs on the importation or exportation of goods, and keeps import and export licensing to a minimum. With its free trade regime, products (including returned products) can be sent in and out of Hong Kong easily, making it the ideal location in the region to set up an after-sales service centre.
- FAST FLOW: fast company setup/end (few hours), fast travel, fast Internet, fast logistics, fast customs, fast everything.
- FAST DISTRIBUTION: as a tariff-free port with world-class trade financing services, Hong Kong has long been THE distribution hub for goods and services in and out of Mainland China and southeast Asia. The city has first-class road and rail links, the world's busiest international air cargo airport and one of the world's busiest container ports supporting a range of practical and reliable multi-modal logistics solutions. With its round-the-clock border crossings and an efficient customs clearance regime, air cargo can be cleared within 80 minutes, rail cargo within 60 minutes and detained sea cargo within three to five working days.
- Nearly 100 airlines, 900 flights a day, direct flights to 160+ destinations worldwide including 45 cities in Mainland China. In addition, 90 shipping lines provide 500+ container line serviced per week, connecting Hong Kong to 500+ destinations worldwide. Located 5 hours from half the world's population, 4 hours from most of Asia's key markets, hundreds of years of trading with every part of the globe.

- REGIONAL HEADQUARTERS AND STRATEGIC FUNCTIONS: Hong Kong is THE business hub in Asia. Over 3,600 overseas companies that have based their Asia-Pacific operations in Hong Kong, employing around 250,000 people. As a result of the shift of business gravity from West to East, an increasing number of technology companies are relocating their global headquarters or functional/business units to Hong Kong.
- English spoken – not less important when you need to move fast.
- MARKETING: Since 300+ international conventions and exhibitions are held in Hong Kong each year, including the world's largest electronics fair, this is an opportunity to meet distributors. Moreover, Hong Kong consumers are known to be tech-savvy and love anything new, hence many technology companies also like to use Hong Kong as a test market to showcase new products and gauge market response in order to better predict international demand.
- References:
  www.scchk.com.hk/index.php?option=com_content&view=article&id=47&Itemid=67
  www.hksoa.org/whyhk/whyhongkong.html
  www.export.gov/hongkong/doingbusinessinhongkong/index.asp
  www.investhk.gov.hk/why-hong-kong.html

Vital Services if you work in/from Hong Kong

Alex Lo: Senior Account Executive at Bridges Executive Centre Limited

Mr. Alex Lo has provided us with excellent service and competitive pricing to meet all our business needs, from company formation, assistance with bank account opening and ongoing accounting/ auditing. Bridges Executive Centre will accommodate not only the company's business address in one of the most prestigious business tower of downtown Hong Kong next to the central Government, Bank of China and many others – but also avail you with fancy meeting and conference rooms to meet with clients and VIPs.

- Website: www.bridges.hk/en/
- Phone: +852-2159-9666
- Email: info@bridges.hk

Michael Lamb: Chief Executive Officer, CCW Global Limited

CCW Global takes care of your company's medical, personal accident and other employee benefits, travel, office, liability and other types of insurance. Mr. Lamb graduated Hong Kong International School and before becoming CEO of CCW, has been employed by Pacific Prime Insurance Brokers, a leading global insurance advisor with over 100,000 clients in the Asia Pacific region, and Marcus Evans, an international business events and information company. CCW Global is a member of Professional Insurance Brokers Association, Reg. No. PIBA-0533-009418.

- Website: https://www.ccw-global.com/
- Phone: +852-2114-2840
- Email: info@ccw-global.com

G4S: Security Monitoring & Response Team

G4S Hong Kong is recommended as the security firm for your industrial operations HK. Located Cheung Sha Wan, they will provide on-call security service and perform surveillance as needed, as well as help set up your CCTV security.

- Website: www.g4s.com.hk
- Tel: +852-2173-3333
- Email: enquiry@hk.g4s.com

Mass Production

- Categorised list of Chinese manufacturers and suppliers by HKTDC - the Hong Kong Trade Development Council: http://www.hktdc.com/suppliers/china-wholesale-suppliers/en
- List of precision machining companies: http://www.listofcompaniesin.com/hong-kong/precision-machining/
- HKAPIA (Hong Kong Auto Parts Industry Association) lists 105 design and manufacturing companies, and 35 traders: www.hkapia.org/members/
- You can travel to PRD (Shenzhen area), Changsha (Hunan district) and other industrial zones in Mainland China and try your luck to find the right suppliers/manufacturers. This is a tedious job especially if you do not speak fluent Mandarin; it's an ocean full of professional talents but is infested with sharks, too. The easier option is to Google [precision metal works HK] and look for what I call "duality manufacturers" – design/liaison office in HK, factory in PRD.

Electronics factory in Shenzhen. Photo: Steve Jurvetson

- How to Screen Potential Suppliers: http://www.chinaimportal.com/screening/
- Free import guides: www.chinaimportal.com/blog/importers-guide-to-shenzhen-capital-of-electronics-manufacturing/ -- and http://www.chinaimportal.com/blog/

Free Logistics Software

Example of logistics tools that may be right for you if you're going for very large operations: https://bigsunworld.com/LogisticsAndWareHousing.aspx

For the grave security reasons explained above, I recommend that you avoid "online software" like the plague! Use software and modules that can be operated completely offline. Here are some free resources:

- http://download.cnet.com/s/logistics/
- http://logistics-software.winsite.com/
- http://blog.capterra.com/the-top-5-free-inventory-software-systems/

ABC Inventory

→→→ http://almyta.com/abc_inventory_software.asp ←←←

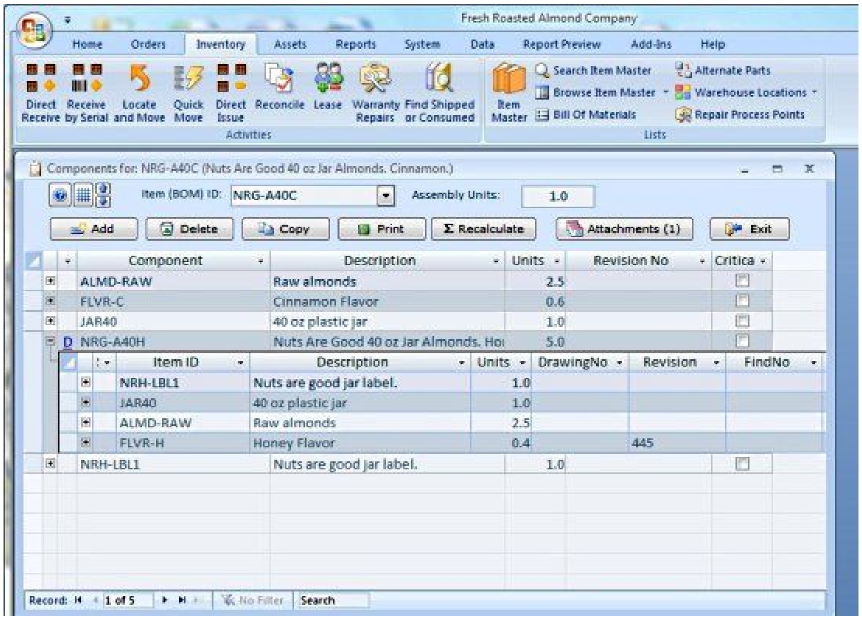

Components for: NRG-A40C (Nuts Are Good 40 oz Jar Almonds. Cinnamon.)

Item (BOM) ID: NRG-A40C

Assembly Units: 1.0

Component	Description	Units	Revision No	Critica
ALMD-RAW	Raw almonds	2.5		☐
FLVR-C	Cinnamon Flavor	0.6		☐
JAR40	40 oz plastic jar	1.0		☐
NRG-A40H	Nuts Are Good 40 oz Jar Almonds. Ho	5.0		☐
NRH-LBL1	Nuts are good jar label.	1.0		☐

Item ID	Description	Units	DrawingNo	Revision	FindNo
NRH-LBL1	Nuts are good jar label.	1.0			
JAR40	40 oz plastic jar	1.0			
ALMD-RAW	Raw almonds	2.5			
FLVR-H	Honey Flavor	0.4		445	

A free single-user package to manage multiple warehouses, serial numbers, warranties and a host of other inventory related data. Geared specifically toward smaller companies that don't need all the bells and whistles of the bigger systems.

This system has TONS of good features, but should the needs grow out of the free version, licenses are available for low prices:

- Stand Alone, single user (no network) $435
- Networked, unlimited users $935
- Server version $1835 (***but as warned above, don't go there!!!*** Always be "over-protective" in terms of cyber security because some "Internet experts" tend to grossly underestimate the viciousness of both hackers and the new threat – AI – to all IT).

B2B Logistics/Trucking Service

https://www.36link.net - a convenient platform that connects you to trucking providers.

Educate Your Team – and Yourself

Have you Read or Listened to Grant Cardone Today?

#1 Sales Training System in the World

Selling Basics 28 Courses $695	Understanding The Buyer 29 Courses $695	The Sales Process 73 Courses $995	Theory of Closing 42 Courses $1095	Closing Strategies 106 Courses $1095	Cold Calling 59 Courses $1495	Incoming Calls 22 Courses $695	Follow-Up 132 Courses $1095
Internet Response 23 Courses $495	Prospecting 30 Courses $695	100 Ways To Stay Motivated 101 Courses $995	Follow-Up Tool 365-Day Plan $995	Top Traits of Great Salespeople 65 Courses $795	Inspiration From Grant 132 Courses $395	Handling Objections 322 Courses $995	Cardone Mastermind Group 52 Live Sessions $4800

Over 1000 Online Lessons • 24/7 On-Demand Access • Full Testing and Certification

"After getting on Cardone University 2 weeks ago I was able to bring back a client that will be worth over $60,000 this year."

ADAM SCHROEDER
Sales & Marketing Manager
★★★★★

"I made just over half a million in sales in 2015 thanks to Cardone University! Thank you for ALL you're doing."

DARIUS VEGA
Hero Training Center
★★★★★

"If you're thinking about Cardone University, stop thinking and invest in your future. My productivity went up 80% after just 1 month of training."

KIMM OILAR
Financial Consultant
★★★★★

"I recently enrolled in the Cardone University and it paid for itself in just a few days in commission checks."

AUSTIN MCGEE
WellDone Technology
★★★★★

"I made my $1k back within 48 hours after just watching 8 or 9 videos. This program is magic!"

DEREK VICKERS
Aflac
★★★★★

Why Cardone University?

Cardone University means not only sales training and marketing advice, but a whole business philosophy on how to succeed where/when others are having a hard time. And your entire team should be on it!

- http://CardoneUniversity.com/
- www.youtube.com/channel/UCdlNK1xcy-Sn8liq7feNxWw

Find books, MP3, posters, various low-cost packages
and even free yet GOLDEN downloads: https://GrantCardone.com/

Educate Your Client

This book – when in print with professional hardcover – is not just "impressive" but a ***powerful door opener*** to recruit money, partnerships and alliances. So far it has been the easiest and cheapest to print in TWO volumes with the American self-publishing service BookBaby: https://www.bookbaby.com

Additional Must-Have Tools

Make yourself an OFFLINE collection of videos appearing in this book. If you don't know how, hire the wiz kid next door, buy him his favorite toy/tickets.

Have – and practice using – the ***learning aids*** from Chapter 4. If you can't make them yourself (or someone in your team), search eBay/Google for [waterfuel learning aids] or [waterfuel demo] and similar keywords. Don't allow anybody to degrade them as "toys" and insult you for using them! Politely but firmly explain that these are TOOLS to demonstrate and show ***CRUCIAL energy/ economy/pollution principles*** that have never been broadly SHOWN before, and possibly some of them have never been used at all before the publication of this book.

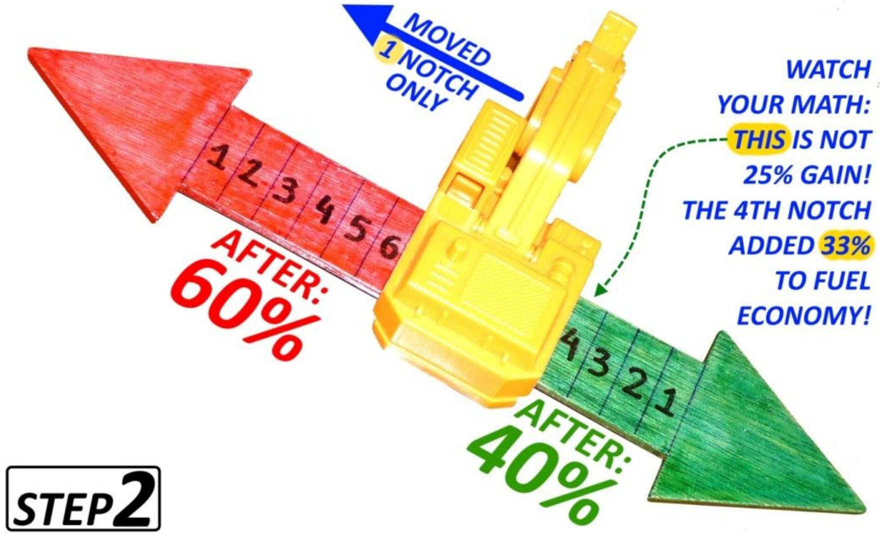

Also, PRINT, or keep handy on a tablet computer:

- The list of tech validations from 1916-2017 – page 369; you may want to download and print all these documents (400+ pages) but the list itself is definitely more handy so I would keep this option for absolute necessity,
- The diagram titled THE SECRET SOURCE OF FREE ENERGY from Chapter 4,
- US Patent 1,262,034 that shows the origins of tech (in Government hands and files) from 1916 – three full pages from Chapter 13. Put them together; the image below is just an example of how the "poster" may look like.

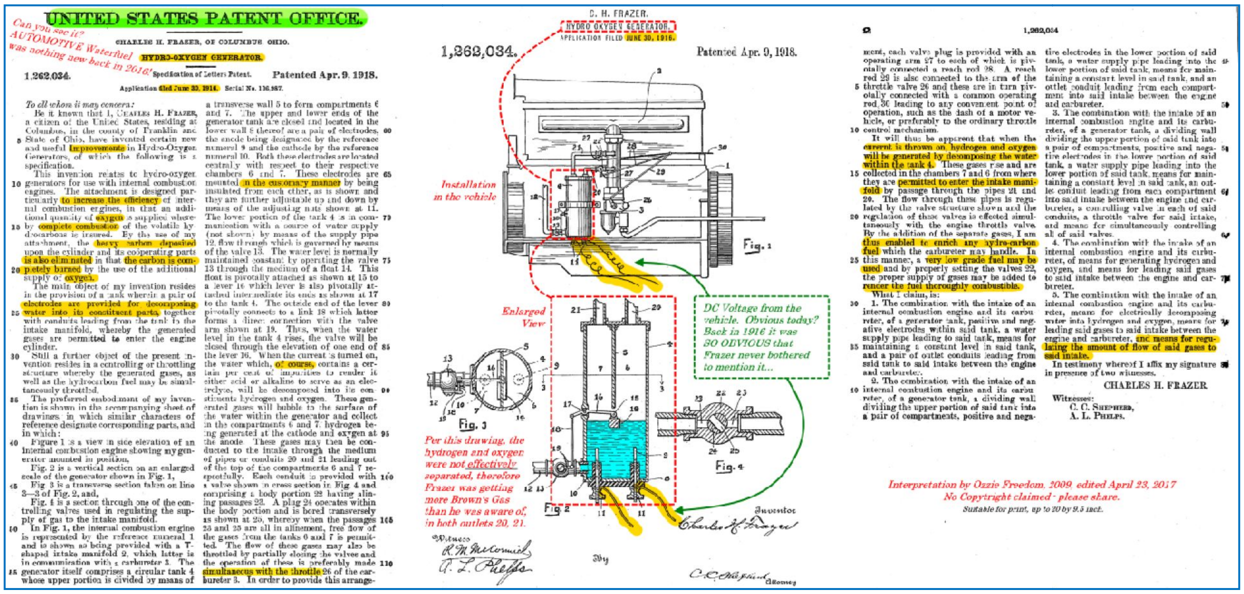

UNITED STATES PATENT OFFICE.

CHARLES H. FRAZER, OF COLUMBUS OHIO.

HYDRO-OXYGEN GENERATOR.

1,262,034. Specification of Letters Patent. Patented Apr. 9, 1918.

Application filed June 30, 1916. Serial No. 106,987.

Can you see it? AUTOMOTIVE Waterfuel was nothing new back in 2016!

C. H. FRAZER.
HYDRO OXYGEN GENERATOR.
APPLICATION FILED JUNE 30, 1916.

1,262,034. Patented Apr. 9, 1918.

Installation in the vehicle

Enlarged View

DC Voltage from the vehicle. Obvious today? Back in 1916 it was SO OBVIOUS that Frazer never bothered to mention it...

Per this drawing, the hydrogen and oxygen were not effectively separated, therefore Frazer was getting more Brown's Gas than he was aware of, in both outlets 20, 21.

In testimony whereof I affix my signature in presence of two witnesses.

CHARLES H. FRAZER.

Witnesses:
C. C. Shepherd,
A. L. Phelps.

Interpretation by Ozzie Freedom, 2009, edited April 23, 2017
No Copyright claimed - please share.
Suitable for print, up to 20 by 9.5 inch.

Webinars

Webinars, when done right, are considered one of the most cost-effective marketing tools of the Digital Age. Jomer Gregorio counts and explains 8 reasons why a webinar is a great marketing tool: www.business2community.com/digital-marketing/8-reasons-webinar-great-marketing-tool-01042162#P2rAKXkxIMb1LEbH.97

Free and Low Cost Tools

- Why I think ***BigMarker*** is the ultimate Webinar tool? Firstly, it's the fact that no software or plugin for the student or attendee to install. But there are many other reasons: https://www.bigmarker.com/pricing
- Powerful free screen recorder & screencast video editor: https://atomisystems.com/activepresenter/free-edition/
  NOTE: this tool possibly belongs to the video courses section below. But you may find it useful for both. For example, to record your screen while on another platform that has no recording.

Video Courses

- Forbes article 'How To Create A Money-Making Online Course': www.forbes.com/sites/dorieclark/2014/08/06/how-to-create-a-money-making-online-course/
- Create online courses (they let you charge fees if you want): https://teachable.com
- The motto of these guys is "Teach the way your students want to learn": https://www.openlearning.com/courses/create/
- If you want to develop excellent and cost-effective courses, why not use existing web platforms? Freelance website builder and content writer, Joe Fylan, lists the 16 best LMS (Learning Management System) WordPress themes and plugins for 2017: https://athemes.com/collections/best-lms-wordpress-themes-plugins/

Professional Video Hosting

So many options… Consider upload time, security (e.g. danger of closing the account), bandwidth, etc. Resources for commercial video hosting is listed below:

- https://vimeo.com/upgrade - $600/year for 5TB total with no weekly limits. Billed annually. There are cheaper options.
- http://resources.goanimate.com/marketing/8-best-youtube-alternatives-for-business-video-hosting
- http://www.we-are-transport.com/online_video_hosting_comparison/ - see section "Industrial-Strength Options" and also "Hey, what about YouTube?". For (large) business they list only Brightcove, SproutVideo and Wistia – but checking the details, these are ***complicated and expensive***. We just need fast delivery of HD videos to a relatively small audience.
- http://www.hongkiat.com/blog/free-premium-video-hosting-platforms/
- https://premium.wpmudev.org/blog/best-business-video-hosting-sites/

Top Chinese Video Hosting

- www.chinawhisper.com/top-15-most-popular-chinese-video-websites/
- www.statista.com/statistics/276038/china-leading-online-video-platforms/ - note visitor stats.

Web Design

I asked for website design quotes from several countries around the world. They quoted me between USD 20,000 and GBP 100,000, and up to 9 months to make. I designed myself for free using WordPress and several free add-ons. Some parts are missing but I'll get that done soon. And it didn't take 9 months to build. It was up and running in 10 minutes and a few more hours here and there to fill up with contents and videos.

If you are already into web design, as I happened to be at the time, then you don't need this advice. But if you wish to have a full-featured website for a NON-ridiculous cost, try to hire Denise Marie Rodriguez who's been building websites and e-commerce for me and with me since January 2009 (and she's gained a lot of experience since then). She has been programming with interpreted languages such as PHP and has been developing eCommerce systems with such platforms as PrestaShop and others. Languages spoken: English (fluent), Tagalog and Thai.

- LinkedIn: https://ph.linkedin.com/in/denise-marie-rodriguez-201bba41
- Skype: presta.developer
- If Denise is busy, other Filipino designers/programmers can be found via John Jonas: https://www.onlinejobs.ph/blog/how-to-hire-a-filipino-web-designer ***Don't settle for other sources/zones*** *unless you have unlimited funds.*

Doing business in Hong Kong

HK Companies – Due Diligence

Hong Kong Cyber Search Centre: https://www.icris.cr.gov.hk/csci/

Michael Michelini from https://MikesBlog.com/ recommends:

"I will be quite honest, I do searches more and more now on Hong Kong companies before I do business with them; it's free and it gives me a better understanding of how long they have been in business and their company name history. For a small fee, I can dig more into owners and other tidbits."

Hong Kong – R&D Assistance

- InvestHK (86 countries): http://www.investhk.gov.hk/contact-us.html
- Hong Kong Science and Technology Parks Corporation: www.HKSTP.org Tel 852-2629-1818, email enquiry.marketing@hkstp.org
- "CYBERPORT" – HK Cyberport Management Company Limited: www.cyberport.hk
- Innovation and Technology Commission (ITC): www.ITC.gov.hk
  Tel 852-3655-5856, fax 852-2730-4633, email enquiry@itc.gov.hk
- Hong Kong R&D Centre for Logistics and Supply Chain Management Enabling Technologies (LSCM R&D Centre) www.LSCM.hk
  Room 202, Level 2, Block B, Cyberport 4, 100 Cyberport Road, Hong Kong.
  Tel 852-2299-0551, fax 852-2299-0552, email info@lscm.hk

Who wants to join?

--*WHY join?*

- Help advance the Waterfuel industry and its mother – the Cleantech industry
- Possibly find opportunities to earn a portion of the postulated $37 trillion
- Exchange news and knowledge not already exposed in this book.

--*WHAT am I joining?*

A nameless group, a list of contacts from the Waterfuel/Cleantech industries to exchange personal knowledge and business information with. Why nameless? Because organizations such as *Green Peace, Black Brothers* or even *Anonymous* can be infiltrated by "wolves in sheep skin" who may attempt to give them a bad name. So, no group name (use your real name for yourself), and no leader either – let this chapter be your guide, and this book – your treasure map.

--*Does it COST money?*

No.

--*How to CONTACT?*

Find me via www.WaterfuelPro.com or www.1freedom.com or LinkedIn / Facebook / Skype (my full name Ozzie Freedom, never pseudonyms). And more importantly Google [HHO] [Brown's Gas] and [Waterfuel] and find everybody else. Pick up the phone, make friends, talk to them, network.

"I am looking for a lot of men who have an infinite capacity to not know what can't be done."
~Henry Ford

Image: Piotr Siedlecki
PublicDomainPictures.net

This is a new section, unrelated to the previous page.

Presentation

Photo: Linnaea Mallette

What this presentation is

The following pages give you a generic Waterfuel presentation that you can tailor for your private or commercial purposes. I created it and I'm giving you permission to use it freely under the ShareAlike license appearing at the end of the book.

What it is NOT

This is not an offering to buy/invest anything. The images and text appearing herein are provided solely for the purpose of helping the Waterfuel industry and particularly to help those who are doing their first steps on the business side of things. ATTENTION: I'M NOT PUTTING WORDS IN YOUR MOUTH! **DO NOT PROMISE WHAT YOU CANNOT DELIVER** BECAUSE YOU'LL BE BREAKING THE LAW AND BREAKING THE INDUSTRY TOO.

How to Use

You can show it from a computer/tablet or a projector, or right out of the printed book if you have one. In the printed book it's arranged in such a way that each slide has its script right beneath the slide. Add your own descriptions and explanations, just remember to keep it short in order to leave room for your audience to ask questions. In the questions phase you should enhance your answers with videos and the learning aids from Chapter 4.

Good Luck and Make it Count!
~Ozzie Freedom, June 2017

5 Tips For GREAT Sales Presentations – by Grant Cardone

Source: http://cardonenation.ning.com/profiles/blogs/5-tips-for-great-sales

Your presentation of your product or service is where you build value and desire for ownership. This is where you have to paint the picture of ownership and create the "must have this" because they love your solution or because they are certain it will solve problems for them. The presentation of your product or service should handle every concern, build value and motivate your prospect to ownership.

Tip #1: ***Tailor the presentation to your prospect's dominant buying motives.***

Tip #2: ***Use the "magic question" in the presentation.***

Tip #3: ***The 20%+ 10x rule.***

Tip #4: ***Paint pictures of ownership.***

Tip #5: ***Always, always, always write up the buyer after the presentation.***

These are just highlights – read the full article at:
http://cardonenation.ning.com/profiles/blogs/5-tips-for-great-sales

And get fully trained at www.CardoneUniversity.com

WATERFUEL

Save $ in your

- Diesels
- Turbines
- Boilers
- Industry

Let me show you how a green technology called Waterfuel can save you money in your Diesels, turbines, boilers and more.

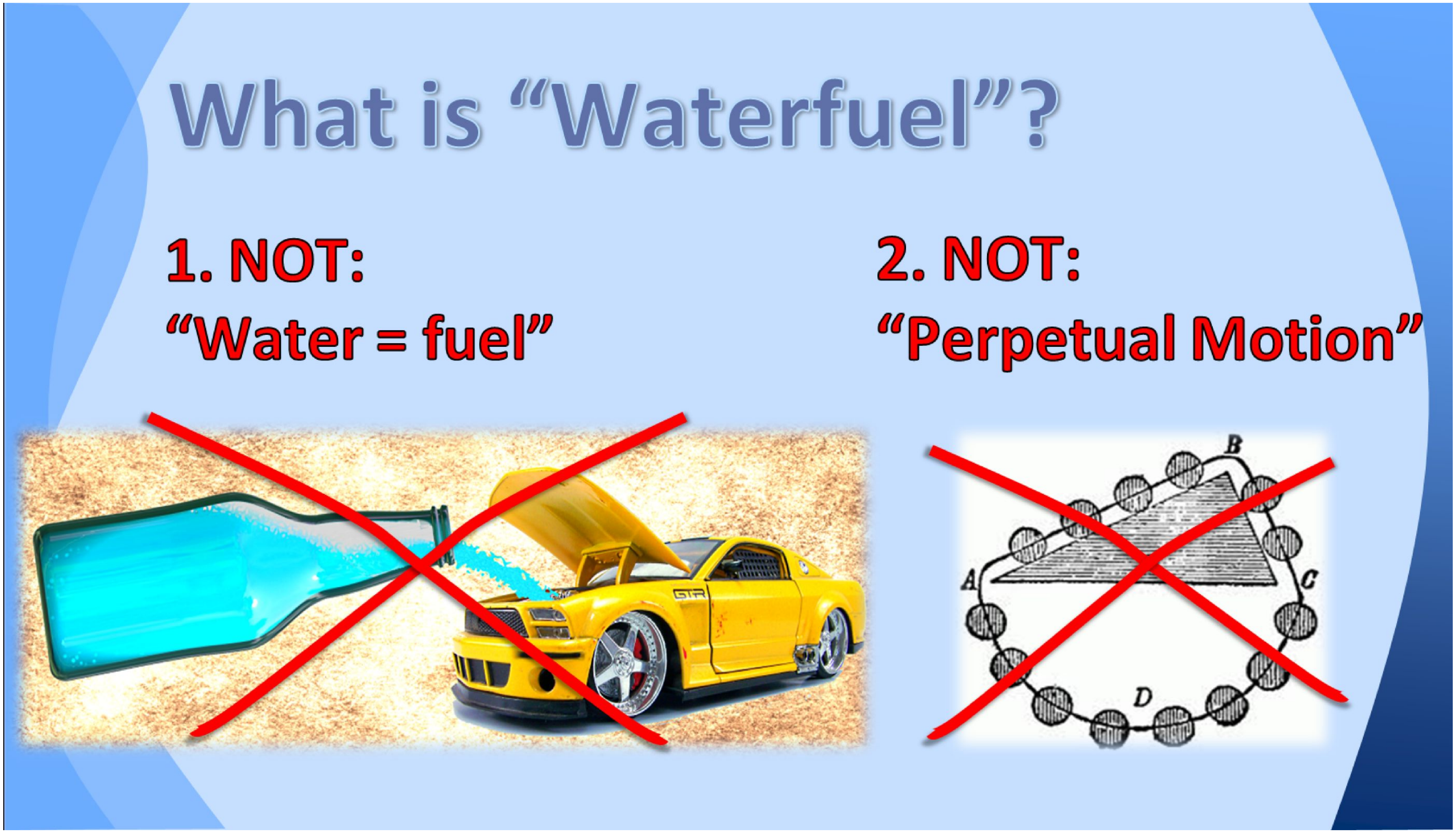

What is “Waterfuel”?

1. NOT:
“Water = fuel”

2. NOT:
“Perpetual Motion”

**Waterfuel is neither pouring water into your fuel tank,
nor does it break the laws of physics.**

3. NOT: “new”

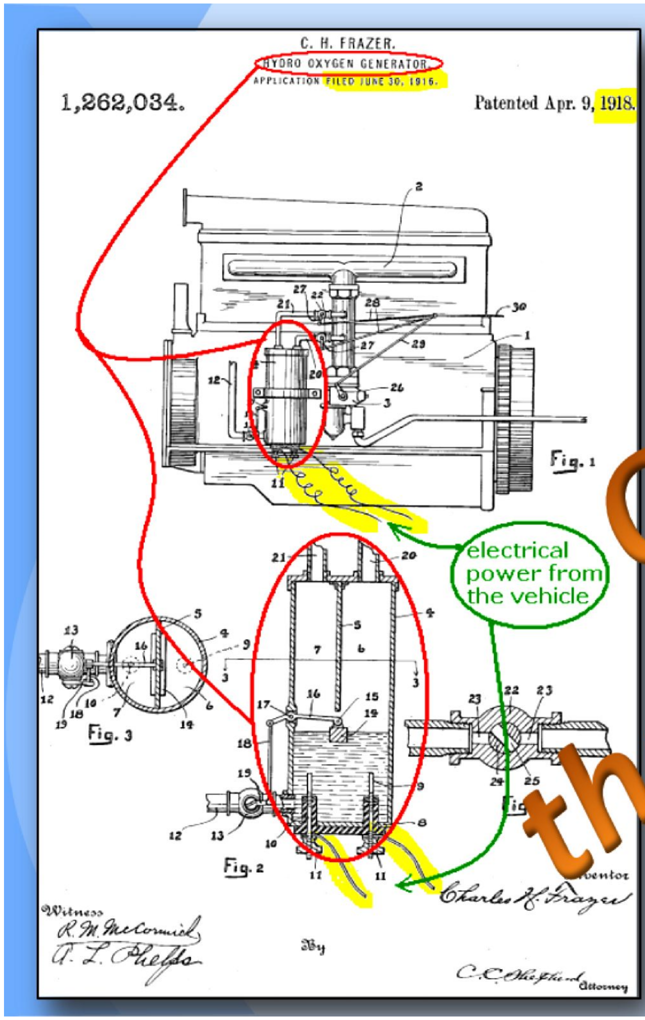

Older than 1916 !!!

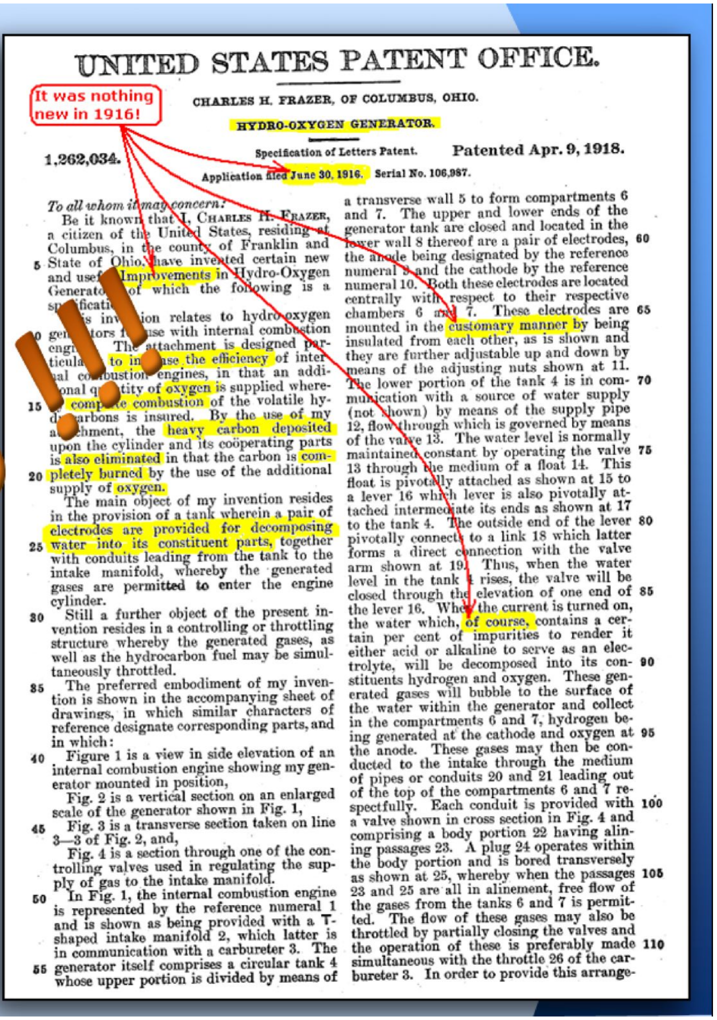

UNITED STATES PATENT OFFICE.

It was nothing new in 1916!

CHARLES H. FRAZER, OF COLUMBUS, OHIO.

HYDRO-OXYGEN GENERATOR.

1,262,034. Specification of Letters Patent. Patented Apr. 9, 1918.

Application filed June 30, 1916. Serial No. 106,987.

To all whom it may concern:

Be it known that I, Charles H. Frazer, a citizen of the United States, residing at Columbus, in the county of Franklin and State of Ohio, have invented certain new and useful Improvements in Hydro-Oxygen Generators, of which the following is a specification.

This invention relates to hydro-oxygen generators for use with internal combustion engines. The attachment is designed particularly to increase the efficiency of internal combustion engines, in that an additional quantity of oxygen is supplied whereby complete combustion of the volatile hydrocarbons is insured. By the use of my attachment, the heavy carbon deposited upon the cylinder and its coöperating parts is also eliminated in that the carbon is completely burned by the use of the additional supply of oxygen.

The main object of my invention resides in the provision of a tank wherein a pair of electrodes are provided for decomposing water into its constituent parts, together with conduits leading from the tank to the intake manifold, whereby the generated gases are permitted to enter the engine cylinder.

Still a further object of the present invention resides in a controlling or throttling structure whereby the generated gases, as well as the hydrocarbon fuel may be simultaneously throttled.

The preferred embodiment of my invention is shown in the accompanying sheet of drawings, in which similar characters of reference designate corresponding parts, and in which:

Figure 1 is a view in side elevation of an internal combustion engine showing my generator mounted in position,

Fig. 2 is a vertical section on an enlarged scale of the generator shown in Fig. 1,

Fig. 3 is a transverse section taken on line 3—3 of Fig. 2, and,

Fig. 4 is a section through one of the controlling valves used in regulating the supply of gas to the intake manifold.

In Fig. 1, the internal combustion engine is represented by the reference numeral 1 and is shown as being provided with a T-shaped intake manifold 2, which latter is in communication with a carbureter 3. The generator itself comprises a circular tank 4 whose upper portion is divided by means of a transverse wall 5 to form compartments 6 and 7. The upper and lower ends of the generator tank are closed and located in the lower wall 8 thereof are a pair of electrodes, the anode being designated by the reference numeral 9 and the cathode by the reference numeral 10. Both these electrodes are located centrally with respect to their respective chambers 6 and 7. These electrodes are mounted in the customary manner by being insulated from each other, as is shown and they are further adjustable up and down by means of the adjusting nuts shown at 11. The lower portion of the tank 4 is in communication with a source of water supply (not shown) by means of the supply pipe 12, flow through which is governed by means of the valve 13. The water level is normally maintained constant by operating the valve 13 through the medium of a float 14. This float is pivotally attached as shown at 15 to a lever 16 which lever is also pivotally attached intermediate its ends as shown at 17 to the tank 4. The outside end of the lever pivotally connects to a link 18 which latter forms a direct connection with the valve arm shown at 19. Thus, when the water level in the tank 4 rises, the valve will be closed through the elevation of one end of the lever 16. When the current is turned on, the water which, of course, contains a certain per cent of impurities to render it either acid or alkaline to serve as an electrolyte, will be decomposed into its constituents hydrogen and oxygen. These generated gases will bubble to the surface of the water within the generator and collect in the compartments 6 and 7, hydrogen being generated at the cathode and oxygen at the anode. These gases may then be conducted to the intake through the medium of pipes or conduits 20 and 21 leading out of the top of the compartments 6 and 7 respectfully. Each conduit is provided with a valve shown in cross section in Fig. 4 and comprising a body portion 22 having alining passages 23. A plug 24 operates within the body portion and is bored transversely as shown at 25, whereby when the passages 23 and 25 are all in alinement, free flow of the gases from the tanks 6 and 7 is permitted. The flow of these gases may also be throttled by partially closing the valves and the operation of these is preferably made simultaneous with the throttle 26 of the carbureter 3. In order to provide this arrange-

It’s also NOT new. Patents that are principally similar to what we do now date as far back as 1916. And the principles of Waterfuel have been in use much longer than that.

What we do for you:

1. Our machine turns water + electricity to a SPECIAL GAS *(<u>not</u> hydrogen!)*
2. Gas ADDED TO THE AIR INTAKE, not to the fuel.
3. Result: *BETTER COMBUSTION.*

Electricity and water make special gas – NOT hydrogen – and we add this special gas to atmospheric air entering the engine. Same fuel, same engine, yet better combustion.

“Better Combustion” is very simple:

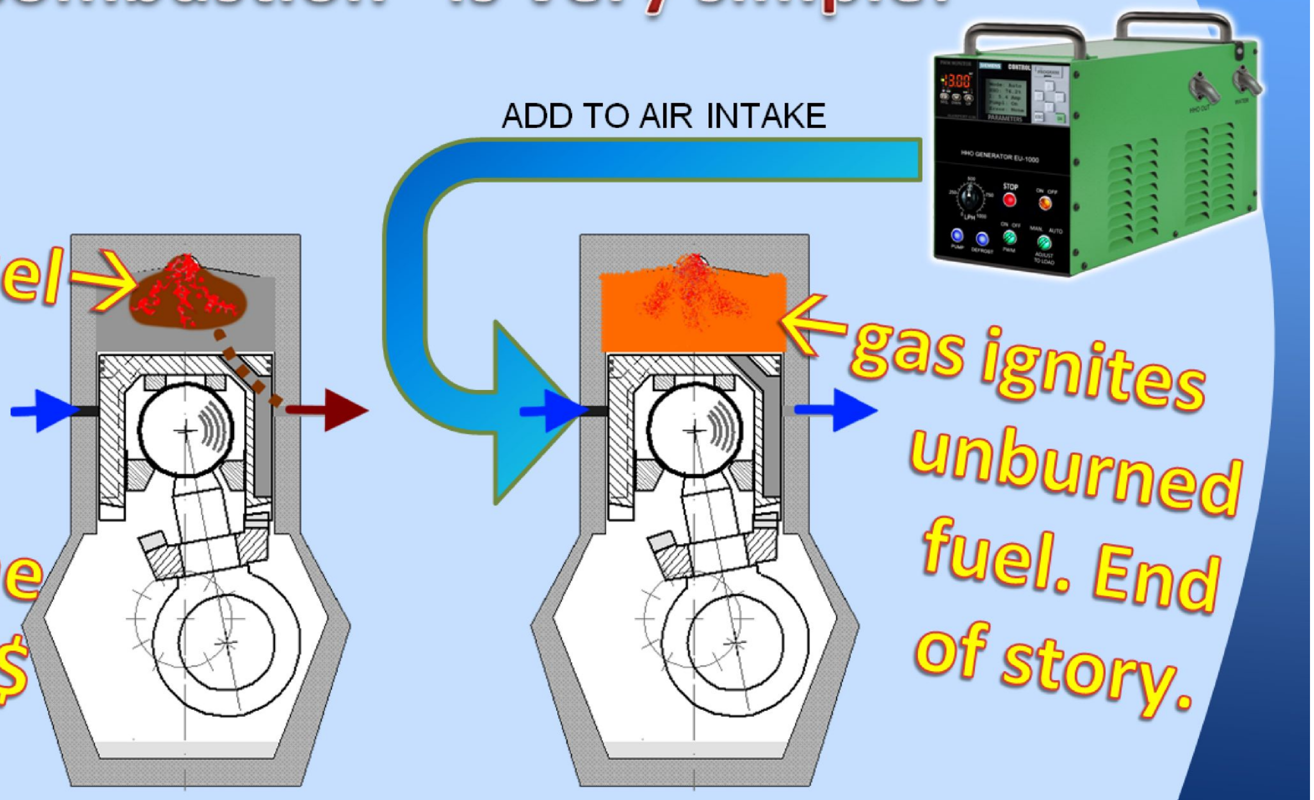

unburned fuel causes:

1. smoke
2. dirty engine
3. wasted $$$

gas ignites unburned fuel. End of story.

Now “better combustion” is quite simple. On the left, your engine burns fuel partially or inefficiently, resulting in pollution and wasted money.

On the right, our special gas is added to incoming air, ignites the unburned fuel, end of story.

Effects:

- ✓ Less fuel - *yet higher torque*
- ✓ Shorter downtime, *longer engine life*
- ✓ Cleaner, Safer

This results in less fuel being used yet higher torque gained, less maintenance – and generally cleaner, safer operation.

Saves you $$$ in:

- ✓ Fuel 10-40%
- ✓ Maintenance
- ✓ Carbon Tax

The monetary benefits to you are saving fuel costs, saving money on maintenance AND reduced downtime AND free daily carbon cleaning, as well as saving on pollution penalties and Carbon Tax if you’re paying any or going to pay soon.

Our
clients
want:
SAVE FUEL!

But we know from actual clients that what hurts them the most is that half their budget is spent in fuel.

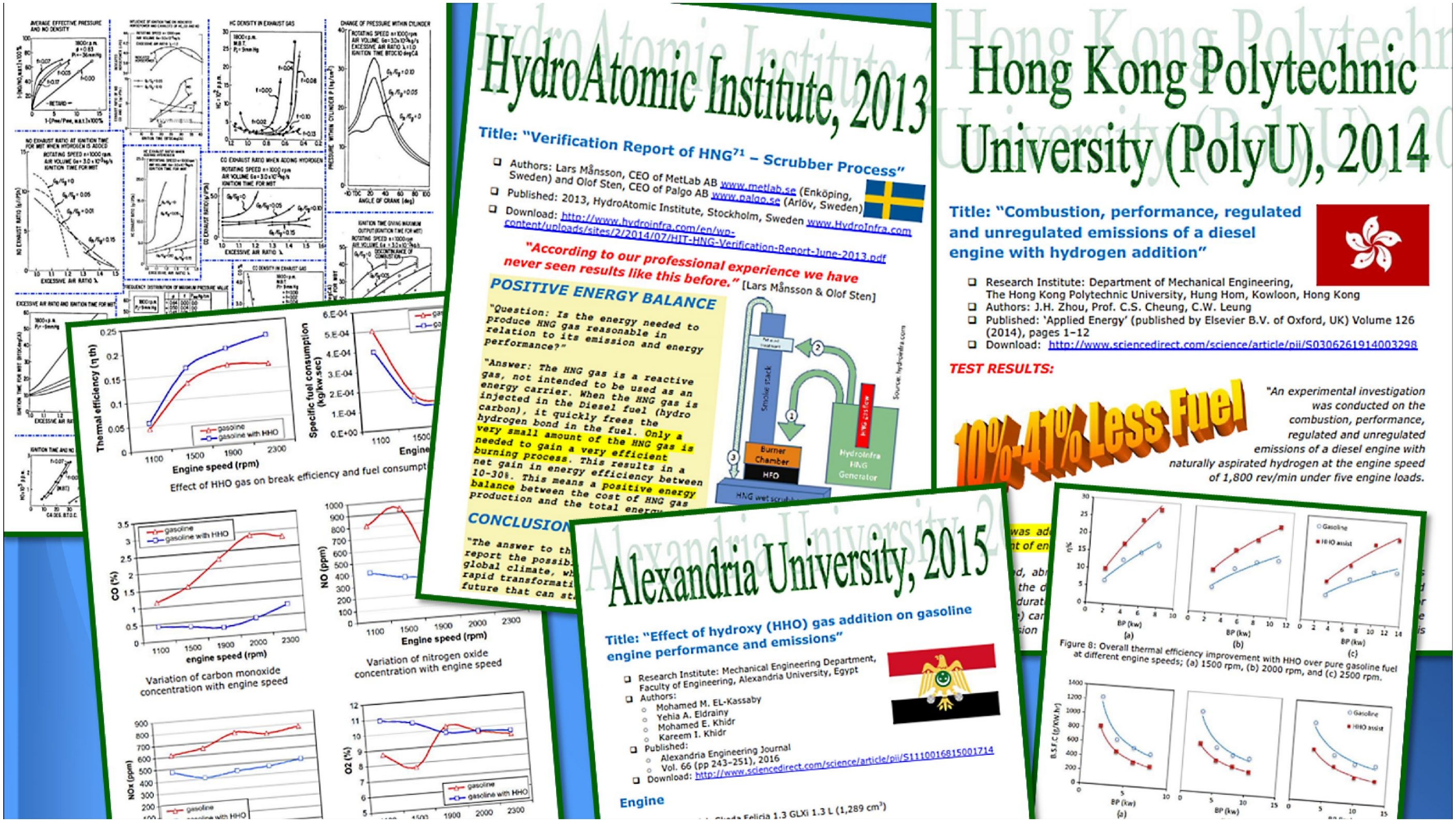

HydroAtomic Institute, 2013

Title: "Verification Report of HNG⁷¹ – Scrubber Process"

- ☐ Authors: Lars Månsson, CEO of MetLab AB www.metlab.se (Enköping, Sweden) and Olof Sten, CEO of Palgo AB www.palgo.se (Arlöv, Sweden)
- ☐ Published: 2013, HydroAtomic Institute, Stockholm, Sweden www.HydroInfra.com
- ☐ Download: http://www.hydroinfra.com/en/wp-content/uploads/sites/2/2014/07/HIT-HNG-Verification-Report-June-2013.pdf

"According to our professional experience we have never seen results like this before." [Lars Månsson & Olof Sten]

POSITIVE ENERGY BALANCE

"Question: Is the energy needed to produce HNG gas reasonable in relation to its emission and energy performance?"

"Answer: The HNG gas is a reactive gas, not intended to be used as an energy carrier. When the HNG gas is injected in the Diesel fuel (hydro carbon), it quickly frees the hydrogen bond in the fuel. Only a very small amount of the HNG gas is needed to gain a very efficient burning process. This results in a net gain in energy efficiency between 10-30%. This means a positive energy balance between the cost of HNG gas production and the total energ

CONCLUSION

"The answer to th
report the possib
global climate, wh
rapid transformati
future that can st

Hong Kong Polytechnic University (PolyU), 2014

Title: "Combustion, performance, regulated and unregulated emissions of a diesel engine with hydrogen addition"

- ☐ Research Institute: Department of Mechanical Engineering, The Hong Kong Polytechnic University, Hung Hom, Kowloon, Hong Kong
- ☐ Authors: J.H. Zhou, Prof. C.S. Cheung, C.W. Leung
- ☐ Published: 'Applied Energy' (published by Elsevier B.V. of Oxford, UK) Volume 126 (2014), pages 1–12
- ☐ Download: http://www.sciencedirect.com/science/article/pii/S0306261914003298

TEST RESULTS:

10%-41% Less Fuel

"An experimental investigation was conducted on the combustion, performance, regulated and unregulated emissions of a diesel engine with naturally aspirated hydrogen at the engine speed of 1,800 rev/min under five engine loads.

Figure 8: Overall thermal efficiency improvement with HHO over pure gasoline fuel at different engine speeds; (a) 1500 rpm, (b) 2000 rpm, and (c) 2500 rpm.

Alexandria University, 2015

Title: "Effect of hydroxy (HHO) gas addition on gasoline engine performance and emissions"

- ☐ Research Institute: Mechanical Engineering Department, Faculty of Engineering, Alexandria University, Egypt
- ☐ Authors:
  - ○ Mohamed M. EL-Kassaby
  - ○ Yehia A. Eldrainy
  - ○ Mohamed E. Khidr
  - ○ Kareem I. Khidr
- ☐ Published:
  - ○ Alexandria Engineering Journal
  - ○ Vol. 66 (pp 243–251), 2016
- ☐ Download: http://www.sciencedirect.com/science/article/pii/S1110016815001714

Engine

Skoda Felicia 1.3 GLXi 1.3 L (1,289 cm³)

Effect of HHO gas on break efficiency and fuel consumpt

Variation of carbon monoxide concentration with engine speed

Variation of nitrogen oxide concentration with engine speed

Is THIS point of saving fuel backed up by scientific, tested and measured third-party validations? This book presents independent, peer reviewed studies from universities and science institutes around the world, showing fuel savings from 10% to over 40%.

WHO CAN BENEFIT?

- ✓ Old engines
- ✓ New engines
- ✓ Any size

MaK marine diesel
Photo: S.J. de Waard

Good for any engine of any size. The engine can be brand new because, remember, the fuel and engine are remain unchanged.

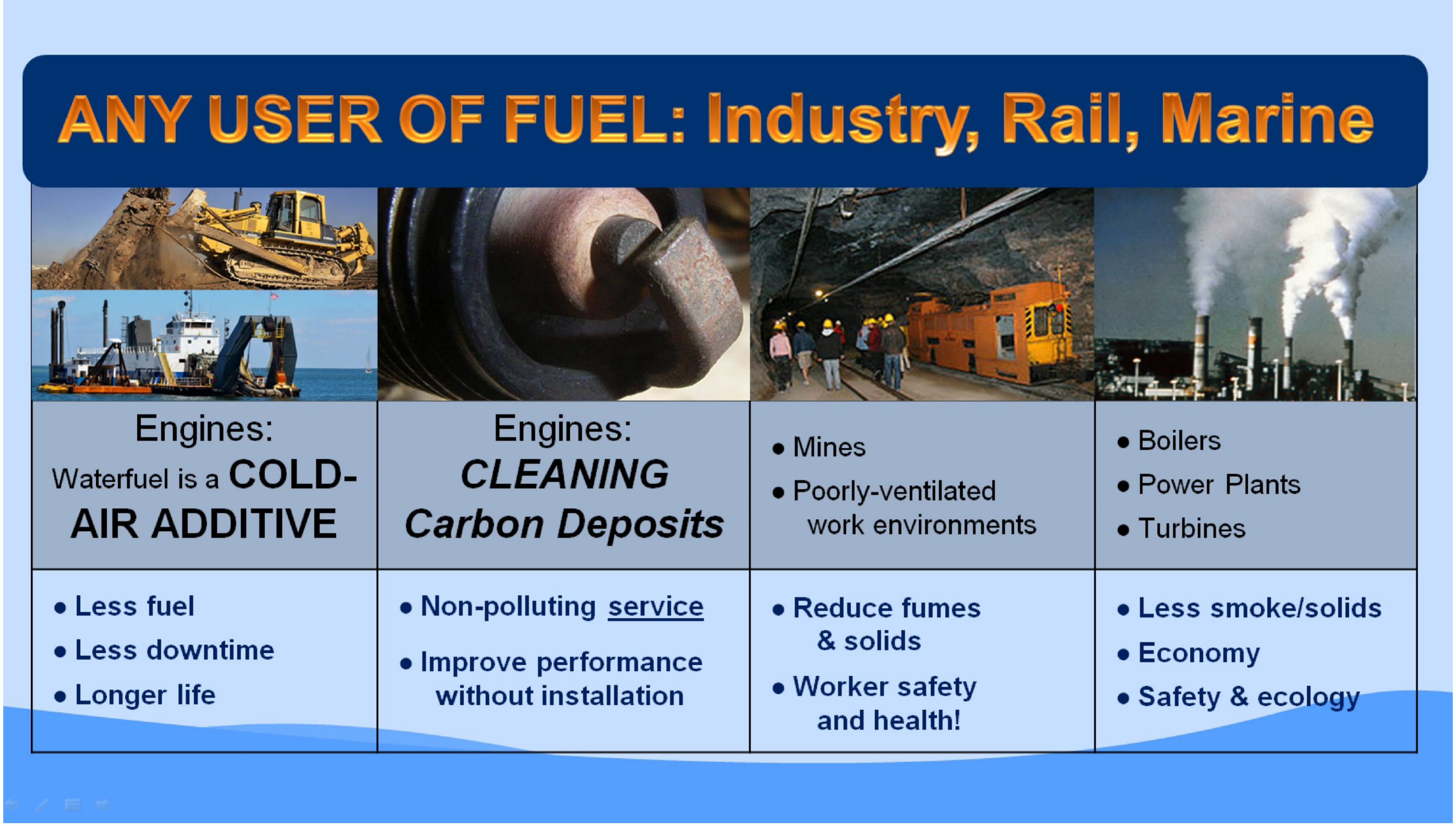

ANY USER OF FUEL: Industry, Rail, Marine

Engines: Waterfuel is a **COLD-AIR ADDITIVE**	Engines: ***CLEANING*** ***Carbon Deposits***	- Mines - Poorly-ventilated work environments	- Boilers - Power Plants - Turbines
- **Less fuel** - **Less downtime** - **Longer life**	- **Non-polluting service** - **Improve performance without installation**	- **Reduce fumes & solids** - **Worker safety and health!**	- **Less smoke/solids** - **Economy** - **Safety & ecology**

Good for any industry or heavy transportation that uses liquid fuel, coal or natural gas. From left to right, in engines you already saw how it’s used as an air-additive. Second, some businesses use it to clean carbon deposits as a service without installation. Third, in mines and other poorly-ventilated spaces, it helps to prevent pollution. Forth, it can be used in boilers and power plant turbines, with similar effects.

“Old” engines/turbines get new life

Easy install gives your engine more torque – while it cleans its own carbon deposits.

Why discard your “old” engine when you can give it new life with a simple installation? Add power while cleaning carbon deposits.

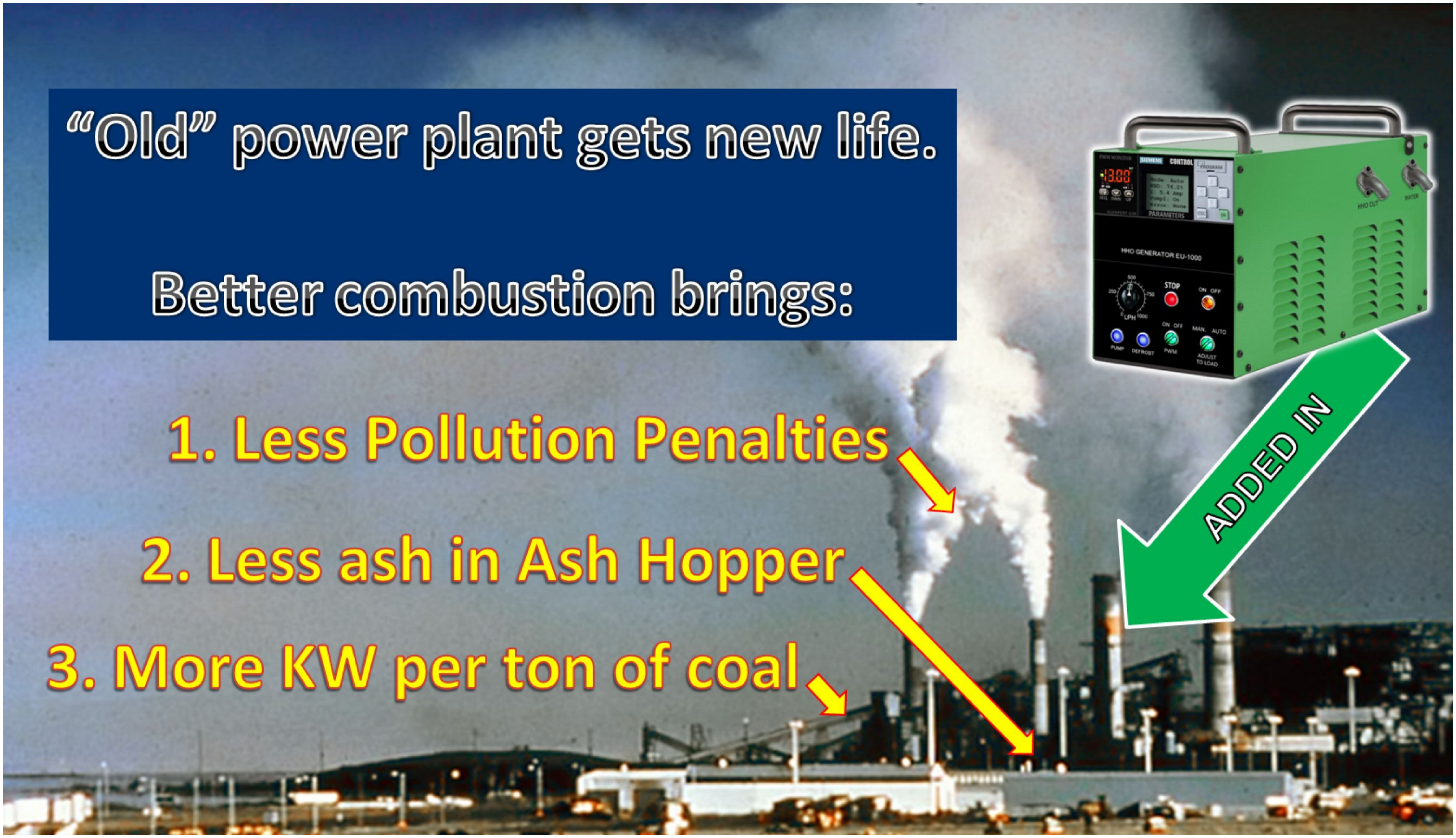

“Old” power plant gets new life.

Better combustion brings:

1. Less Pollution Penalties
2. Less ash in Ash Hopper
3. More KW per ton of coal

In power plants you gain in several ways:

(1) reduce or eliminate pollution penalties,

(2) less ash in the Ash Hopper and Exhaust Stacks; and

(3) you get more kilowatts from each ton of coal or gas.

BOILER: Better combustion = higher BHP (Boiler HP) per Ton

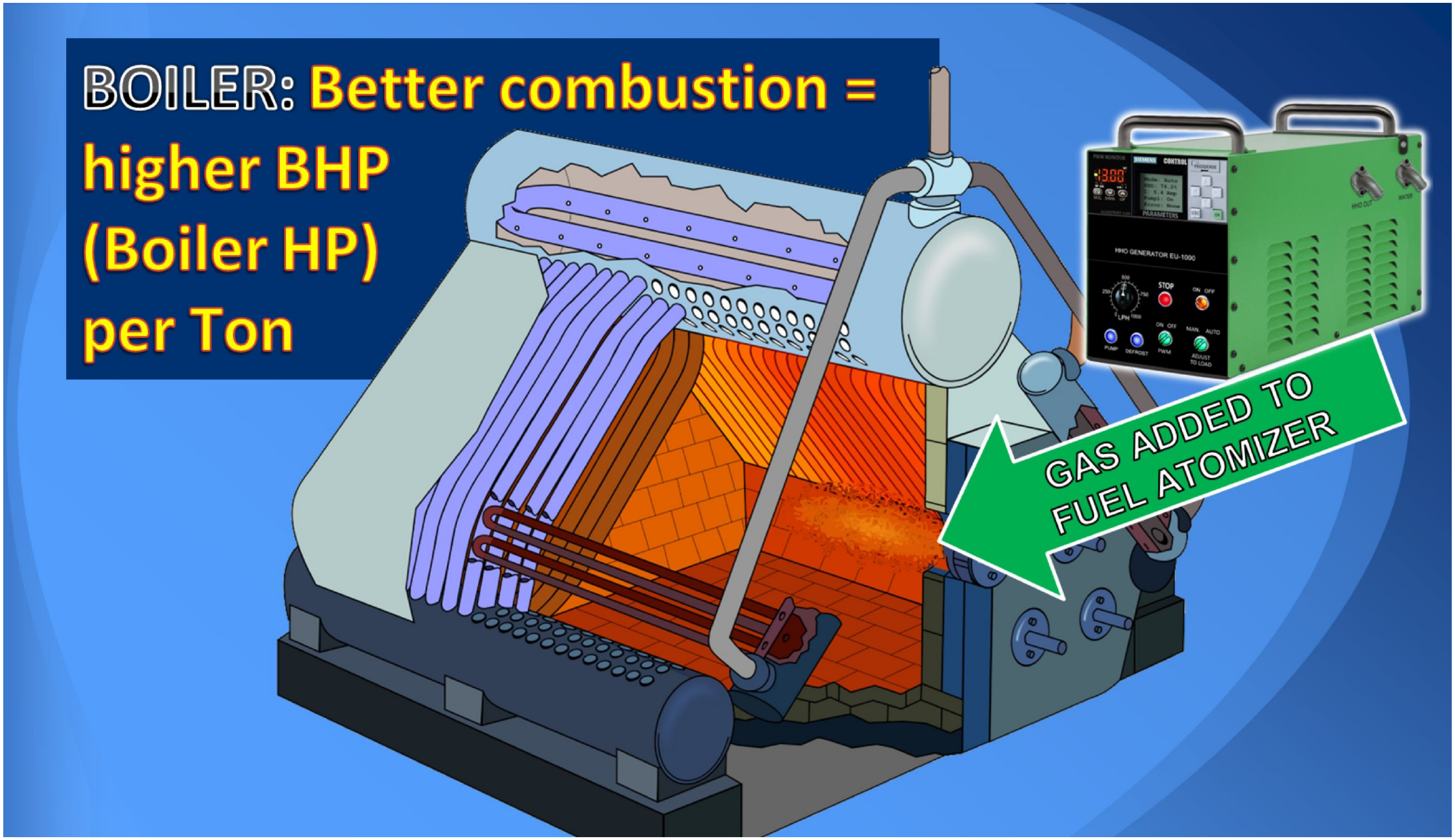

GAS ADDED TO FUEL ATOMIZER

In boilers, the gas is added to the Fuel Atomizer, resulting in higher Boiler Horsepower per ton of fuel or ton of coal.

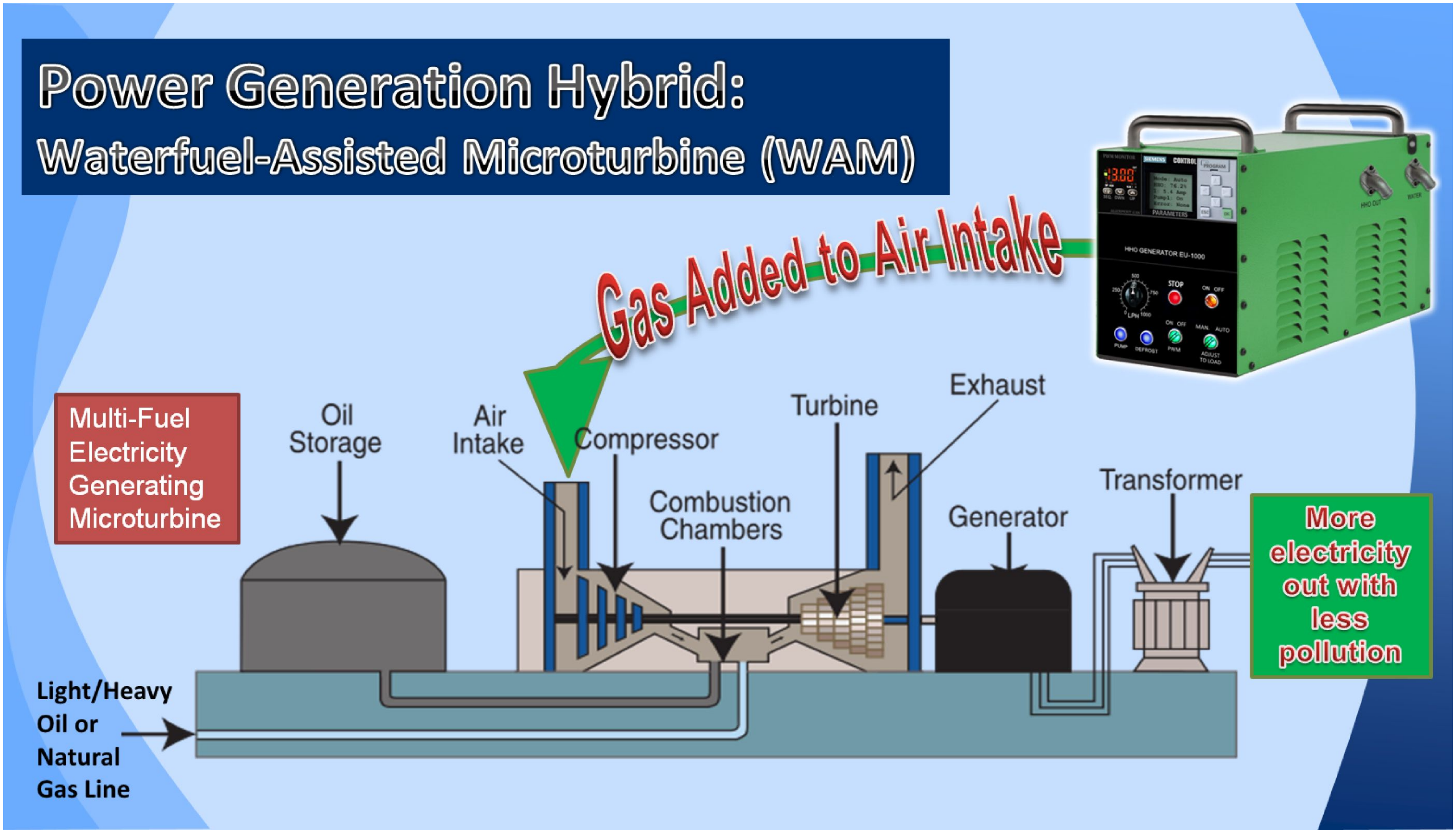

Power Generation Hybrid: Waterfuel-Assisted Microturbine (WAM)

Gas Added to Air Intake

Multi-Fuel
Electricity
Generating
Microturbine

Oil Storage

Air Intake

Compressor

Combustion Chambers

Turbine

Exhaust

Generator

Transformer

More
electricity
out with
less
pollution

Light/Heavy Oil or Natural Gas Line

Waterfuel-Assisted Microturbine (WAM) are, simply stated, existing small-scale electricity/heat production turbines for distributed/ remote power, that have been converted to hybrids: they continue to burn the same light/heavy oil or natural gas, but their combustion efficiency is enhanced by our special gas which is added as usual to the atmospheric air intake.

Also used for: SUPER-CLEAN FLAME

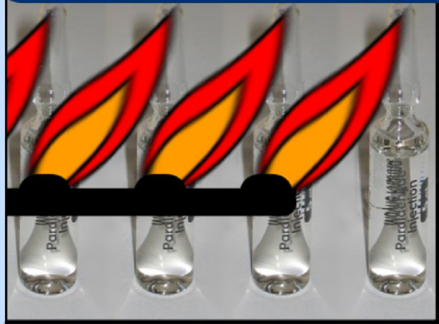			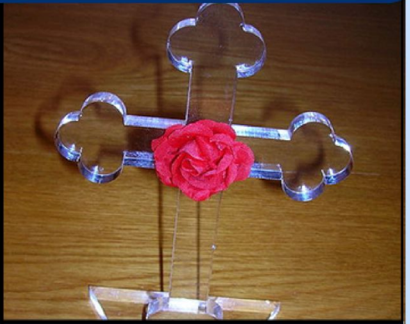
PHARMA & COSMETICS: Cleanest ampoule sealing ever!	**WELDING/CUTTING:** Cleaner, safer, faster job	**WASTE DISPOSAL:** Powerful, clean and focused heat	**ACRYLIC:** Cleanest brazing ever!

Super-clean, safer, economical flame

Other industries can use the gas itself, without fossil fuel, wherever a super-clean flame makes a big difference.

These include sealing ampoules in the pharmaceutical and cosmetics industries, welding and cutting of metals, waste disposal, acrylic industry and others.

Clean carbon deposits to boost performance

20-40 minute service (NO INSTALLATION)

Automotive businesses offer their clients to boost performance by cleaning carbon deposits. This is popular because it’s a service that doesn’t need installation – an important factor for luxury cars, motorcycles, classic cars, leased vehicles, racing and other specialty/local markets.

Really?

IMAGES SOURCE: Google.com

Yes! Used 150+ years.

460+ patents. 1000's of products.

And we are the best because…

Still skeptical? Let me tell you an open secret: this technology has been used in PROFESSIONAL applications for many years now, and today you can find thousands of industrial products. Ours is better, that’s all. Now I’m going to show you why our product is the best.

WATERFUEL

Advantages of the Tech

Competition

Marketing Strategy

Let me show you how we integrate the advantages of the technology with competition factors and marketing strategy.

Does *not* replace Solar & Wind, but has *advantages:* MOBILITY, many uses, SMALL INVESTMENT

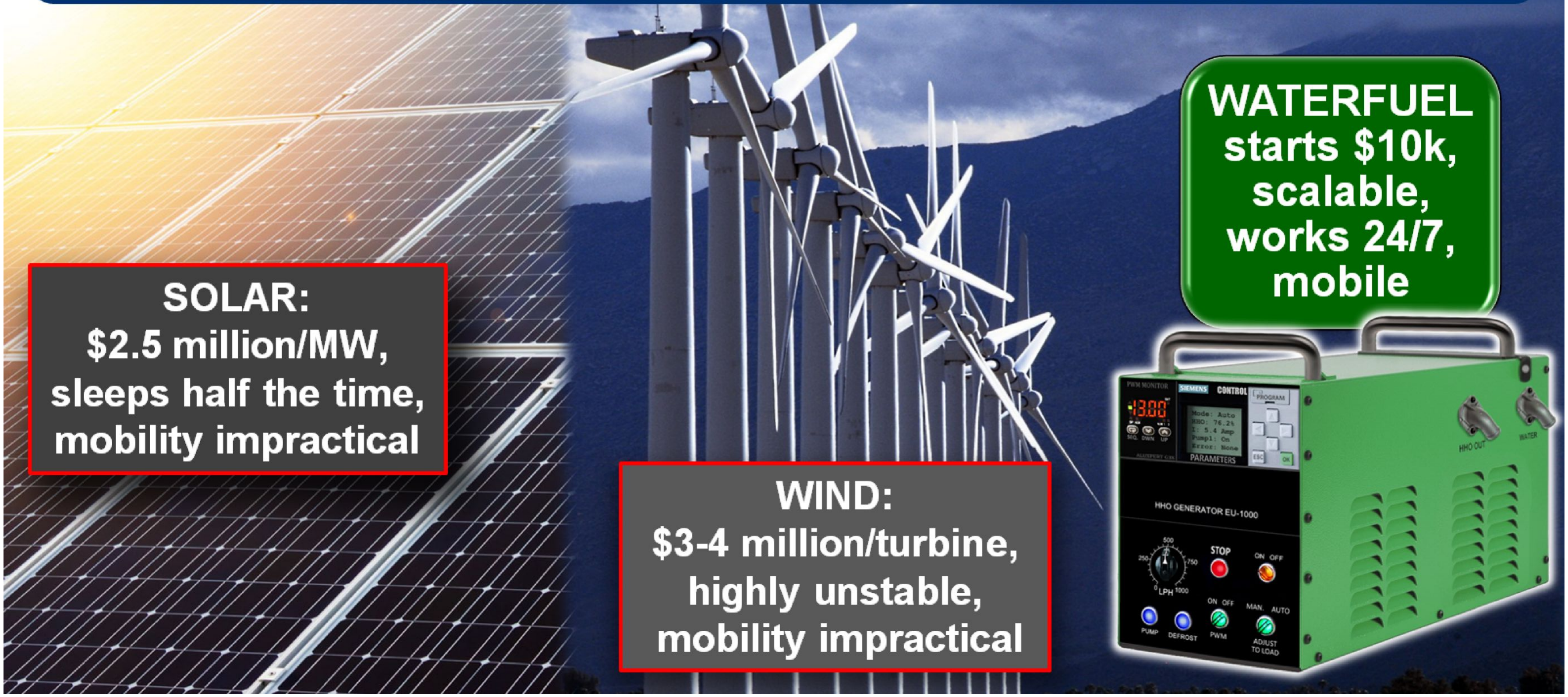

SOLAR:
$2.5 million/MW,
sleeps half the time,
mobility impractical

WIND:
$3-4 million/turbine,
highly unstable,
mobility impractical

WATERFUEL
starts $10k,
scalable,
works 24/7,
mobile

We love Solar and Wind – but not every client has millions to invest (and years to wait), and they are impractical for railroad, marine and underground use.

Waterfuel offers unparalleled mobility, flexibility and 24/7 dependability – at low investment levels.

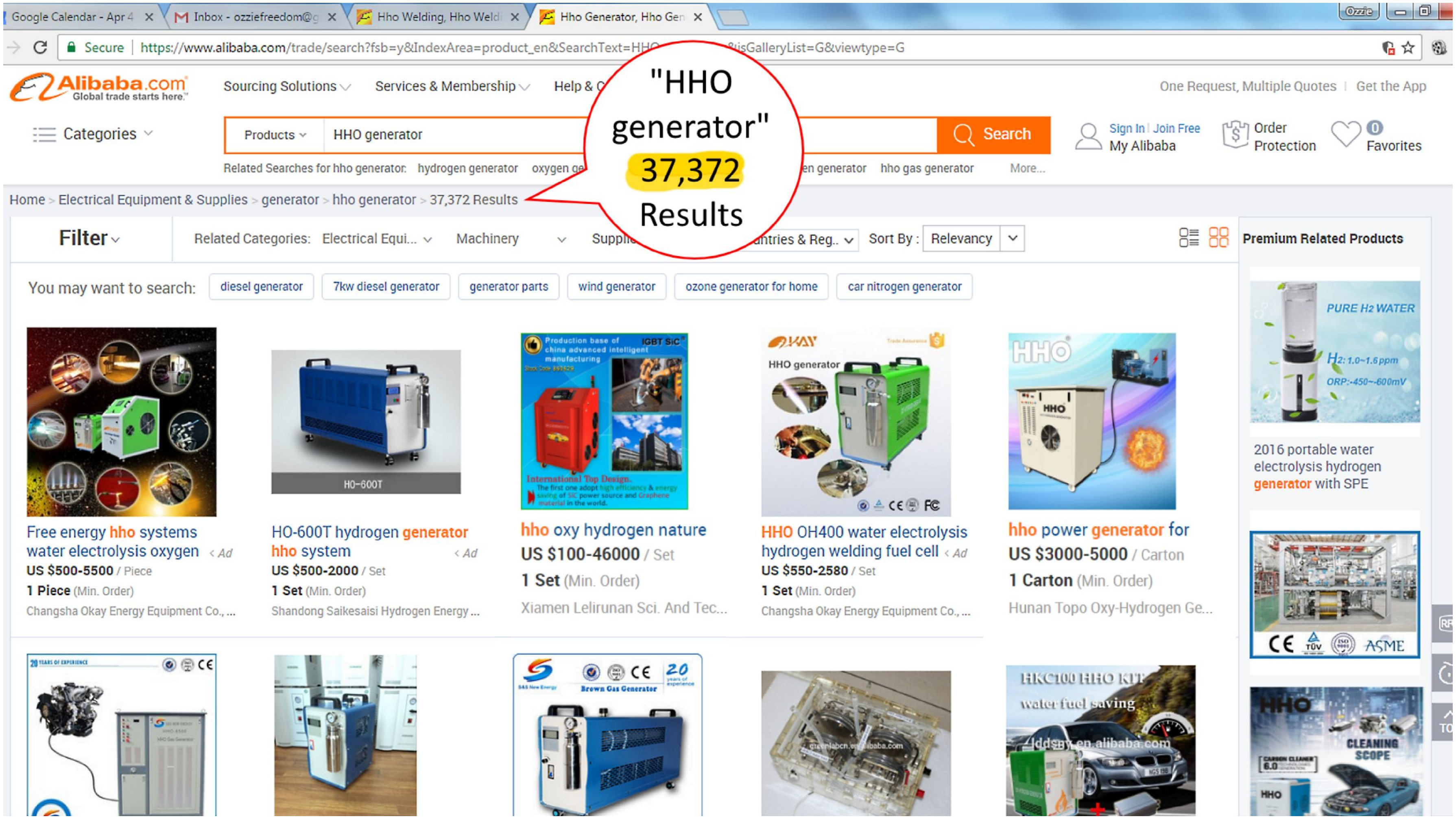

Google Calendar - Apr 4 | Inbox - ozziefreedom@g | Hho Welding, Hho Weld | Hho Generator, Hho Gen

Secure | https://www.alibaba.com/trade/search?fsb=y&IndexArea=product_en&SearchText=HH…isGalleryList=G&viewtype=G

Alibaba.com Global trade starts here.

Sourcing Solutions | Services & Membership | Help & … | One Request, Multiple Quotes | Get the App

Categories | Products | HHO generator | Search | Sign In | Join Free My Alibaba | Order Protection | 0 Favorites

Related Searches for hho generator: hydrogen generator oxygen ge… …en generator hho gas generator More...

Home > Electrical Equipment & Supplies > generator > hho generator > 37,372 Results

"HHO generator" 37,372 Results

Filter | Related Categories: Electrical Equi... | Machinery | Suppli… | …ntries & Reg.. | Sort By : Relevancy

You may want to search: diesel generator | 7kw diesel generator | generator parts | wind generator | ozone generator for home | car nitrogen generator

Free energy hho systems water electrolysis oxygen < Ad
US $500-5500 / Piece
1 Piece (Min. Order)
Changsha Okay Energy Equipment Co., ...

HO-600T hydrogen generator hho system < Ad
US $500-2000 / Set
1 Set (Min. Order)
Shandong Saikesaisi Hydrogen Energy ...

hho oxy hydrogen nature
US $100-46000 / Set
1 Set (Min. Order)
Xiamen Lelirunan Sci. And Tec...

HHO OH400 water electrolysis hydrogen welding fuel cell < Ad
US $550-2580 / Set
1 Set (Min. Order)
Changsha Okay Energy Equipment Co., ...

hho power generator for
US $3000-5000 / Carton
1 Carton (Min. Order)
Hunan Topo Oxy-Hydrogen Ge...

Premium Related Products

2016 portable water electrolysis hydrogen generator with SPE

Competition SEEMS to be a problem as there are over 30,000 product offers from China and other countries.

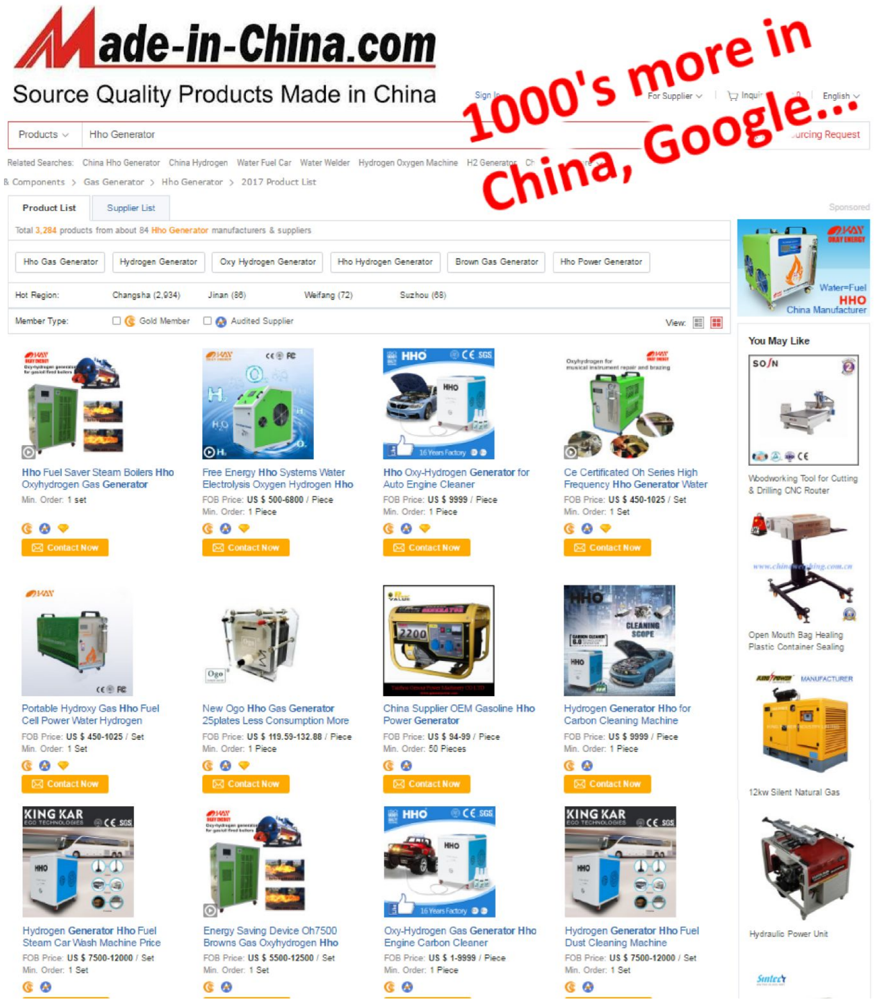

1000's more in China, Google...

Hho Generator

Related Searches: China Hho Generator China Hydrogen Water Fuel Car Water Welder Hydrogen Oxygen Machine H2 Generator

& Components > Gas Generator > Hho Generator > 2017 Product List

Product List | Supplier List

Total 3,284 products from about 84 Hho Generator manufacturers & suppliers

Hho Gas Generator | Hydrogen Generator | Oxy Hydrogen Generator | Hho Hydrogen Generator | Brown Gas Generator | Hho Power Generator

Hot Region: Changsha (2,934) Jinan (86) Weifang (72) Suzhou (68)

Member Type: ☐ Gold Member ☐ Audited Supplier

Hho Fuel Saver Steam Boilers **Hho** Oxyhydrogen Gas **Generator**
Min. Order: 1 set

Free Energy **Hho** Systems Water Electrolysis Oxygen Hydrogen **Hho**
FOB Price: US $ 500-6800 / Piece
Min. Order: 1 Piece

Hho Oxy-Hydrogen **Generator** for Auto Engine Cleaner
FOB Price: US $ 9999 / Piece
Min. Order: 1 Piece

Ce Certificated Oh Series High Frequency **Hho Generator** Water
FOB Price: US $ 450-1025 / Set
Min. Order: 1 Set

Portable Hydroxy Gas **Hho** Fuel Cell Power Water Hydrogen
FOB Price: US $ 450-1025 / Set
Min. Order: 1 Set

New Ogo **Hho** Gas **Generator** 25plates Less Consumption More
FOB Price: US $ 119.59-132.88 / Piece
Min. Order: 1 Piece

China Supplier OEM Gasoline **Hho** Power **Generator**
FOB Price: US $ 94-99 / Piece
Min. Order: 50 Pieces

Hydrogen **Generator Hho** for Carbon Cleaning Machine
FOB Price: US $ 9999 / Piece
Min. Order: 1 Piece

Hydrogen **Generator Hho** Fuel Steam Car Wash Machine Price
FOB Price: US $ 7500-12000 / Set
Min. Order: 1 Set

Energy Saving Device Oh7500 Browns Gas Oxyhydrogen **Hho**
FOB Price: US $ 5500-12500 / Set
Min. Order: 1 Set

Oxy-Hydrogen Gas **Generator Hho** Engine Carbon Cleaner
FOB Price: US $ 1-9999 / Piece
Min. Order: 1 Piece

Hydrogen **Generator Hho** Fuel Dust Cleaning Machine
FOB Price: US $ 7500-12000 / Set
Min. Order: 1 Set

You May Like

Woodworking Tool for Cutting & Drilling CNC Router

Open Mouth Bag Healing Plastic Container Sealing

12kw Silent Natural Gas

Hydraulic Power Unit

You can find them by simple search. However, this is not a problem. Bear with me a minute and I’ll show you how it actually plays to our side.

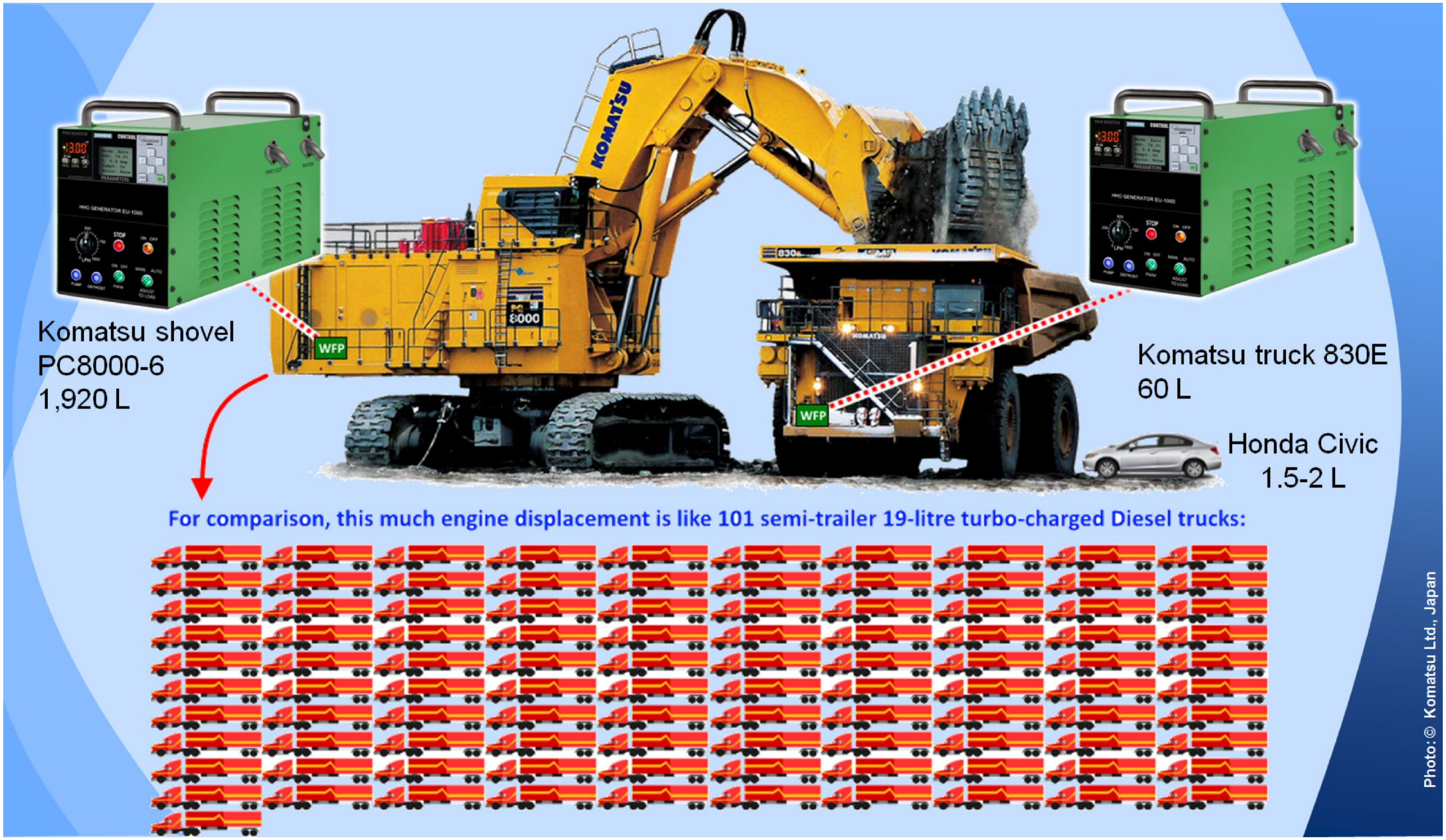

Komatsu shovel
PC8000-6
1,920 L

Komatsu truck 830E
60 L

Honda Civic
1.5-2 L

For comparison, this much engine displacement is like 101 semi-trailer 19-litre turbo-charged Diesel trucks:

Photo: © Komatsu Ltd., Japan

Let me give you a little reality show about this industry. See the Earth Mover truck on the right? It seems to dwarf your car but IT is dwarfed by much larger vehicles. For example the Honda Civic is driven by an engine of 1½ to 2 liters… while the Komatsu 830E Earth Mover’s engine is 60 liters… and Komatsu’s biggest Shovel PC8000-6 is driven by 1,920 liters. Now how much is that in reality? This is the engine displacement of 101 18-wheeler Diesel trucks. And we can serve each of these giants with just one of our gas-producing machines.

ENGINE CARBON CLEANING

*Card payments taken

Carbon build up can cause...

*Rough Idle *Cold Start problems
*Loss of power *Poor fuel economy
*High emissions *Expensive garage bills

Bookings by appointment only.

07930 753732

Come to us at:
Engine Carbon Cleaning, Unit 2 Central Depot,
Barleyfield Ind Est, Brynmawr, NP23 4YF

Jonathan Webster ▸ **Cars,vans for sale in Doncaster**
January 14 ·

(SOLD) Engine Carbon Cleaning (Mobile)
£80
Mansfield, Nottinghamshire

Engine Carbon Cleaning (Mobile)
From £79.99* for Service 1 for 30 mins with a free Engine diagnostic Code read & Fuel treatment Additive, Multi-vehicle discount please ask for more info,
Is your Car, Van or Motor Bike, Bus, Truck Anything with an engine Petrol or Diesel running poor anything like the list Blow?
✓ Using more fuel than it used too?
✓ Is there a loss of power?
✓ Is it running lumpy & rough?
✓ flat spots through the rev range?
✓ Smoking from the Exhaust?
✓ Has it failed its MOT on emissions & smoke?
✓ Are you having issues with DPF*, EGR, Turbos or other carbon related issues?
✓ We can help with all of the above & Save you money & restore fuel economy in the process?
ESP Eco Carbon Cleaning Service WE have the solution From £79.99* Service 1 With a free Engine diagnostic Code read & Fuel Treatment additive, multi-vehicle discount please ask for more info,
We are fully mobile & can come to your Home or Workplace, We use the latest British Hydrogen Technology machine the only one in the UK which will help with excessive Carbon build up & possible be part of the symptoms in the list above & give your engine a good Detox!
The process for Carbon Cleaning takes around 30 to 60 minutes depending on the Carbon Clean Service you choice.
DPF blocked or Problems we have the solution to unblock them with a 98% success rate. http://www.especo.co.uk/carbon-cleaning.html

Let’s take our reality show to the UK, where small home-based businesses have purchased gas-producing machines similar to ours and are using them for mobile engine cleaning service, that boosts their clients’ performance and fuel economy. (These are not our clients, just ads found on Facebook.)


IN £5
OUT £75
NET £70
PWM MONITOR
SIEMENS
CONTROL
PROGRAM
Mode: Auto
HHO: 76.2%
I: 5.4 Amp
Pump1: On
Error: None
PARAMETERS
HHO OUT
WATER
HHO GENERATOR EU-1000
STOP
ON OFF
LPH
PUMP
DEFROST
PWM
MAN. AUTO
ADJUST TO LOAD
IFF COHI

They usually come to you, so they use YOUR space, YOUR fuel and YOUR electricity. Their consumables are what? Water!

70 pounds profit for 30 minutes while YOUR engine cleans itself. Not a bad business, is it?

37 DIVERSE NICHE MARKETS

1. WAM: Waterfuel-Assisted Microturbine hybrids
2. Diesel Engine Enhancement – generators, Diesel engines
3. Special solutions for giant-scale diesels
4. Railroad
5. Earth Movers
6. Fossil-Fueled Generators
7. Boilers, Boiler Rooms
8. Fossil-Fueled Power Plants
9. Carbon Cleaning – shop/ mobile service
10. Pharmaceutical & Cosmetics – Ampoule Processing
11. Adhesive drying
12. Annealing (softening), brazing
13. Cable stripping
14. Casting (die and investment)
15. Cutting
16. Creating semiprecious stones (example: manufacture rubies)
17. Flame cutting – directly cutting metal, plastic sheets, hard rods and hard fibers (also: adding oxygen to flame cutting)
18. Energy storage
19. Epoxy curing
20. Flame drilling
21. Flame polishing of glass, plastic, quartz and ceramics
22. Gouging (pierce or perforate)
23. Heat shrinking
24. Molding with heat
25. Neutralizing radioactive waste
26. Ore/mineral refining, separation and manufacture
27. Plasma spray
28. Preheating
29. Pressure/vacuum pump
30. Freeze drying
31. Distillation
32. Sintering (compacting by heat without liquefaction)
33. Soldering (all types)
34. Tempering
35. Toxic waste neutralization
36. Underwater cutting and heating
37. Welding of precious metals, quartz, copper, aluminum, glass, wax, cast iron, plastics, etc.

So you see, there’s a variety of applications big and small, some don’t even require installation. Do you see how many listed here? There are at least 37 niche markets that are geared toward industrial and professional clients.

Opportunity is everywhere…

…just look around

Opportunity is everywhere. Just look around and you’ll see the great variety of business types and scale that can be made.

WATERFUEL

TOP-5 REASONS to CHOOSE US

Let me show you the top-5 reasons why you should choose us.

1. Independent PROOF of FUEL SAVINGS (10% guaranteed, 30% possible)

ONE – everybody’s tired of high energy bills, and we provide proof AND WRITTEN GUARANTEE of fuel savings.

2.
Certified for explosive environments: ATEX Directive 2014/34/EU

TWO – all our machines are certified for explosive environments. Not every customer needs it, but why compromise on less than top safety if the price is right?

3.

Certified for marine conditions (IEC61701) <u>and worker safety</u>

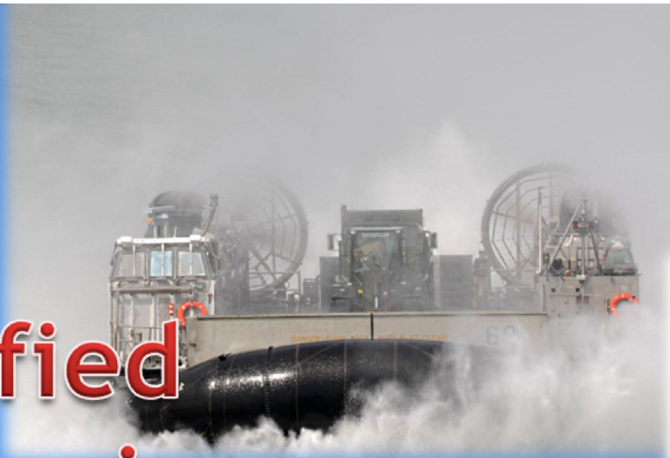

THREE – marine certification benefits your every application. It covers not only salt splash and humidity but also high heat, shock, and worker safety.

4.
AIR FORCE MAINTENANCE CONCEPTS: shorter downtime, lower costs

FOUR – for you, Air Force maintenance principles mean shorter downtime and lower operational costs.

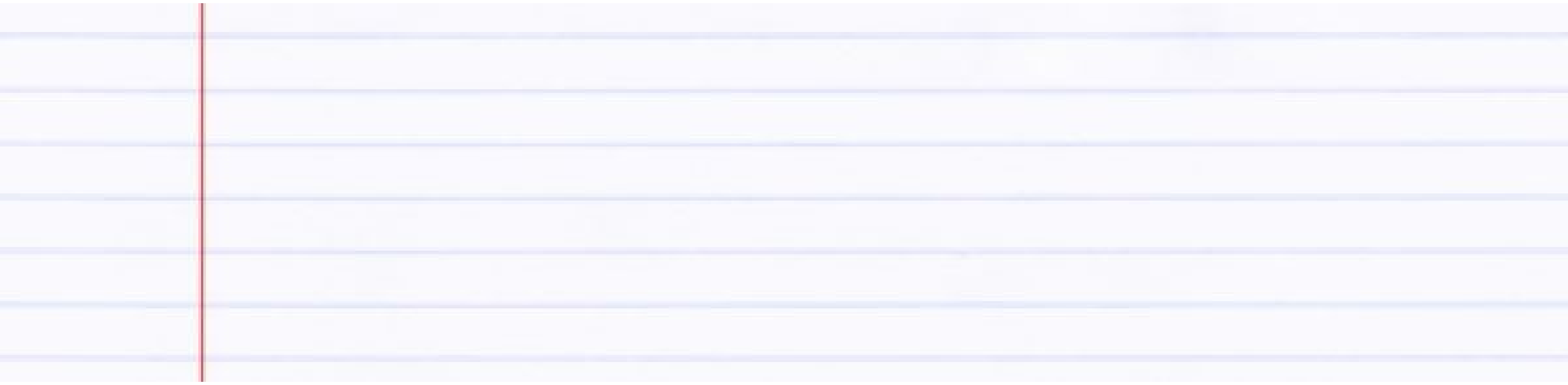

5.
Scalable to fit large engines, power plants

Bottom line: multiple savings

FIVE – our machines can be quickly scaled up to fit very large applications.

The bottom line of these 5 reasons is multiple savings for you.

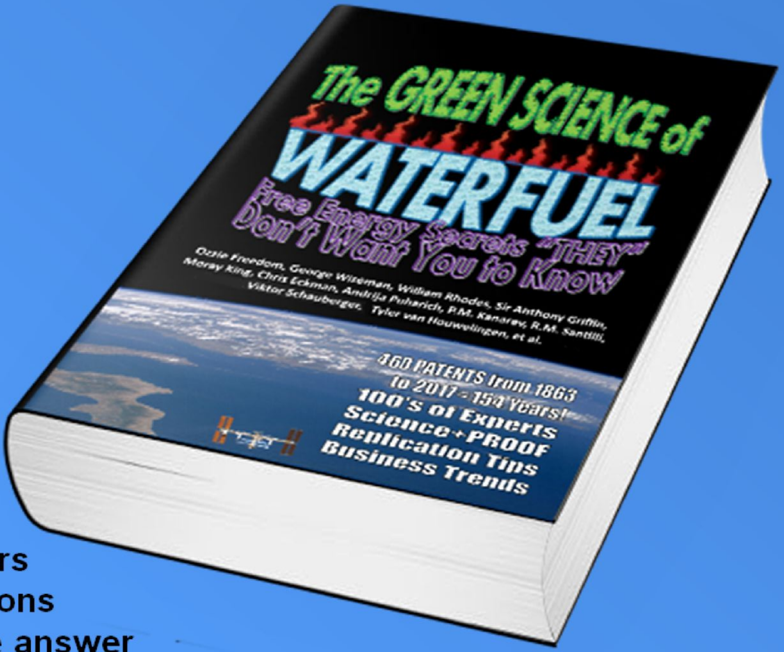

- **500 years(!) of Waterfuel unveiled in 8 years of extensive research**
- **Covers 10,000+ pages of science**
- **460+ Patents from the past 154 years**
- **Many other gov't & science validations**
- **This 1200-page book is the ultimate answer to the question "Is Waterfuel REAL?"**

Free download from the Publisher:
http://1freedom.com/green-science-of-waterfuel/

We have the complete science covered in this 1200-page book and you’re welcome to study it from cover to cover.


YOU HAVE
OUR IRONCLAD,
LAWYER-SUPERVISED
FUEL ECONOMY
GUARANTEE
WATERFUEL

But you’re not buying science, you want to SAVE – and this takes us back to the first reason – our ironclad fuel economy guarantee will be supervised by your lawyer and ours – because we stand behind our promise to deliver savings NO MATTER WHAT.


We'll analyze your application,
if not absolutely sure THAT
WE CAN HELP YOU SAVE,
we will not sell you anything.
WATERFUEL

In fact, we’ll first analyze your application and if we’re not absolutely sure that we can help you save, we will not sell you anything.

Contact:

Your
Business
Card
Here

Thank you for your time but I’m sure you still have questions. For free consultation, please contact me after this presentation. (My business card or brochure are here).

My request:

-Buy a product ________

-Buy a service ________

-We need funding for ________

-Give us a Letter Of Interest; or document ________

-Get me a meeting with ________

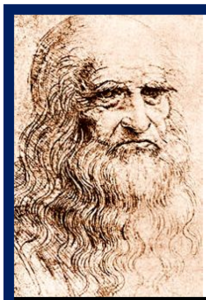

”If you find from your own experience that something is a fact and it contradicts what some authority has written down, then you must abandon the authority and base your reasoning on your own findings.”

~Leonardo da Vinci (1452-1519), considered the greatest innovator of the Renaissance era

“A true man does not only stand up for himself, he stands up for those that do not have the ability to.”

~William Lyon Mackenzie King (1874-1950), considered the greatest Canadian Prime Minister

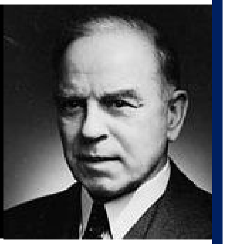

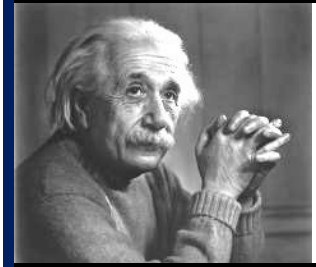

“The right to search for the truth implies also a duty; one must not conceal any part of what one has recognized to be the truth.”

~Albert Einstein (1879–1955), considered the most influential physicist of the 20th century

“Let’s face it, there is no shortage of dreamers on this planet. There is only a shortage of people doing whatever it takes to make those dreams come true.”

~Grant Cardone (1958-), considered the greatest sales trainer in the world; this quote is from his 2009 book ‘The Closer’s Survival Guide’

“The future belongs to those who believe in the beauty of their dreams.”

~Eleanor Roosevelt (1884-1962); Truman called her the “First Lady of the World” for her human rights achievements

”Summing it all up, to help and protect we: (1) EXPERIMENT, (2) we SHARE the knowledge, (3) first we need to BELIEVE in our dreams and goals, but then (4) we follow belief with action – *MASSIVE ACTION.”*

~Ozzie Freedom (1957-), considered (by his wife) the greatest Waterfuel author of all times

SHARE

This book is a non-profit educational project that supports Waterfuel and all Cleantech. If you wish to reprint this book (no cost, no royalties) please contact the Publisher for ready-to-print files, best printers and free advice.

Book & eBook License

Attribution-ShareAlike 4.0 International (CC BY-SA 4.0)

https://creativecommons.org/licenses/by-sa/4.0/

You are free to:

✓ **Share** — copy and redistribute the material in any medium or format

✓ **Adapt** — remix, transform, and build upon the material for any purpose, even commercially.

The licensor cannot revoke these freedoms as long as you follow the license terms.

Under the following terms:

- **Attribution** — You must give appropriate credit, provide a link to the license, and indicate if changes were made. You may do so in any reasonable manner, but not in any way that suggests the licensor endorses you or your use.
- **ShareAlike** — If you remix, transform, or build upon the material, you must distribute your contributions under the same license as the original.
- **No additional restrictions** — You may not apply legal terms or technological measures that legally restrict others from doing anything the license permits.

Notices:

- You do not have to comply with the license for elements of the material in the public domain or where your use is permitted by an applicable exception or limitation.
- No warranties are given. The license may not give you all of the permissions necessary for your intended use. For example, other rights such as publicity, privacy, or moral rights may limit how you use the material.

Creative Commons Corporation ("Creative Commons") is not a law firm and does not provide legal services or legal advice. Distribution of Creative Commons public licenses does not create a lawyer-client or other relationship. Creative Commons makes its licenses and related information available on an "as-is" basis. Creative Commons gives no warranties regarding its licenses, any material licensed under their terms and conditions, or any related information. Creative Commons disclaims all liability for damages resulting from their use to the fullest extent possible.

Using Creative Commons Public Licenses

Creative Commons public licenses provide a standard set of terms and conditions that creators and other rights holders may use to share original works of authorship and other material subject to copyright and certain other rights specified in the public license below. The following considerations are for informational purposes only, are not exhaustive, and do not form part of our licenses.

Considerations for licensors: Our public licenses are intended for use by those authorized to give the public permission to use material in ways otherwise restricted by copyright and certain other rights. Our licenses are irrevocable. Licensors should read and understand the terms and conditions of the license they choose before applying it. Licensors should also secure all rights necessary before applying our licenses so that the public can reuse the material as expected. Licensors should clearly mark any material not subject to the license. This includes other CC-licensed material, or material used under an exception or limitation to copyright. More considerations for licensors: https://wiki.creativecommons.org/Considerations_for_licensors_and_licensees

Considerations for the public: By using one of our public licenses, a licensor grants the public permission to use the licensed material under specified terms and conditions. If the licensor's permission is not necessary for any reason–for example, because of any applicable exception or limitation to copyright–then that use is not regulated by the license. Our licenses grant only permissions under copyright and certain other rights that a licensor has authority to grant. Use of the licensed material may still be restricted for other reasons, including because others have copyright or other rights in the material. A licensor may make special requests, such as asking that all changes be marked or described. Although not required by our licenses, you are encouraged to respect those requests where reasonable. More considerations for the public: https://wiki.creativecommons.org/Considerations_for_licensors_and_licensees

Creative Commons Attribution-ShareAlike 4.0 International Public License

By exercising the Licensed Rights (defined below), You accept and agree to be bound by the terms and conditions of this Creative Commons Attribution-ShareAlike 4.0 International Public License ("Public License"). To the extent this Public License may be interpreted as a contract, You are granted the Licensed Rights in consideration of Your acceptance of these terms and conditions, and the Licensor grants You such rights in consideration of benefits the Licensor receives from making the Licensed Material available under these terms and conditions.

Section 1 – Definitions.

a. **Adapted Material** means material subject to Copyright and Similar Rights that is derived from or based upon the Licensed Material and in which the Licensed Material is translated, altered, arranged, transformed, or otherwise modified in a manner requiring permission under the Copyright and Similar Rights held by the Licensor. For purposes of this Public License, where the Licensed Material is a musical work, performance, or sound recording, Adapted Material is always produced where the Licensed Material is synched in timed relation with a moving image.

b. **Adapter's License** means the license You apply to Your Copyright and Similar Rights in Your contributions to Adapted Material in accordance with the terms and conditions of this Public License.

c. **BY-SA Compatible License** means a license listed at creativecommons.org/compatiblelicenses, approved by Creative Commons as essentially the equivalent of this Public License.

d. **Copyright and Similar Rights** means copyright and/or similar rights closely related to copyright including, without limitation, performance, broadcast, sound recording, and Sui Generis Database Rights, without regard to how the rights are labeled or categorized. For purposes of this Public License, the rights specified in Section 2(b)(1)-(2) are not Copyright and Similar Rights.

e. **Effective Technological Measures** means those measures that, in the absence of proper authority, may not be circumvented under laws fulfilling obligations under Article 11 of the WIPO Copyright Treaty adopted on December 20, 1996, and/or similar international agreements.

f. **Exceptions and Limitations** means fair use, fair dealing, and/or any other exception or limitation to Copyright and Similar Rights that applies to Your use of the Licensed Material.

g. **License Elements** means the license attributes listed in the name of a Creative Commons Public License. The License Elements of this Public License are Attribution and ShareAlike.

h. **Licensed Material** means the artistic or literary work, database, or other material to which the Licensor applied this Public License.

i. **Licensed Rights** means the rights granted to You subject to the terms and conditions of this Public License, which are limited to all Copyright and Similar Rights that apply to Your use of the Licensed Material and that the Licensor has authority to license.

j. **Licensor** means the individual(s) or entity(ies) granting rights under this Public License.

k. **Share** means to provide material to the public by any means or process that requires permission under the Licensed Rights, such as reproduction, public display, public performance, distribution, dissemination, communication, or importation, and to make material available to the public including in ways that members of the public may access the material from a place and at a time individually chosen by them.

l. **Sui Generis Database Rights** means rights other than copyright resulting from Directive 96/9/EC of the European Parliament and of the Council of 11 March 1996 on the legal protection of databases, as amended and/or succeeded, as well as other essentially equivalent rights anywhere in the world.

m. **You** means the individual or entity exercising the Licensed Rights under this Public License. **Your** has a corresponding meaning.

Section 2 – Scope.

a. **License grant**.

1. Subject to the terms and conditions of this Public License, the Licensor hereby grants You a worldwide, royalty-free, non-sublicensable, non-exclusive, irrevocable license to exercise the Licensed Rights in the Licensed Material to:
    - A. reproduce and Share the Licensed Material, in whole or in part; and
    - B. produce, reproduce, and Share Adapted Material.
2. Exceptions and Limitations. For the avoidance of doubt, where Exceptions and Limitations apply to Your use, this Public License does not apply, and You do not need to comply with its terms and conditions.
3. Term. The term of this Public License is specified in Section 6(a).
4. Media and formats; technical modifications allowed. The Licensor authorizes You to exercise the Licensed Rights in all media and formats whether now known or hereafter created, and to make technical modifications necessary to do so. The Licensor waives and/or agrees not to assert any right or authority to forbid You from making technical modifications necessary to exercise the Licensed Rights, including technical modifications necessary to circumvent Effective Technological Measures. For purposes of this Public License, simply making modifications authorized by this Section 2(a)(4) never produces Adapted Material.
5. Downstream recipients.
    - A. Offer from the Licensor – Licensed Material. Every recipient of the Licensed Material automatically receives an offer from the Licensor to exercise the Licensed Rights under the terms and conditions of this Public License.
    - B. Additional offer from the Licensor – Adapted Material. Every recipient of Adapted Material from You automatically receives an offer from the Licensor to exercise the Licensed Rights in the Adapted Material under the conditions of the Adapter’s License You apply.
    - C. No downstream restrictions. You may not offer or impose any additional or different terms or conditions on, or apply any Effective Technological Measures to, the Licensed Material if doing so restricts exercise of the Licensed Rights by any recipient of the Licensed Material.
6. No endorsement. Nothing in this Public License constitutes or may be construed as permission to assert or imply that You are, or that Your use of the Licensed Material is, connected with, or sponsored, endorsed, or granted official status by, the Licensor or others designated to receive attribution as provided in Section 3(a)(1)(A)(i).

b. **Other rights**.

1. Moral rights, such as the right of integrity, are not licensed under this Public License, nor are publicity, privacy, and/or other similar personality rights; however, to the extent possible, the Licensor waives and/or agrees not to assert any such rights held by the Licensor to the limited extent necessary to allow You to exercise the Licensed Rights, but not otherwise.
2. Patent and trademark rights are not licensed under this Public License.
3. To the extent possible, the Licensor waives any right to collect royalties from You for the exercise of the Licensed Rights, whether directly or through a collecting society under any voluntary or waivable statutory or compulsory licensing scheme. In all other cases the Licensor expressly reserves any right to collect such royalties.

Section 3 – License Conditions.

Your exercise of the Licensed Rights is expressly made subject to the following conditions.

a. **Attribution**.

1. If You Share the Licensed Material (including in modified form), You must:
    - A. retain the following if it is supplied by the Licensor with the Licensed Material:
        - i. identification of the creator(s) of the Licensed Material and any others designated to receive attribution, in any reasonable manner requested by the Licensor (including by pseudonym if designated);

      ii. a copyright notice;
      iii. a notice that refers to this Public License;
      iv. a notice that refers to the disclaimer of warranties;
      v. a URI or hyperlink to the Licensed Material to the extent reasonably practicable;
    B. indicate if You modified the Licensed Material and retain an indication of any previous modifications; and
    C. indicate the Licensed Material is licensed under this Public License, and include the text of, or the URI or hyperlink to, this Public License.

  2. You may satisfy the conditions in Section 3(a)(1) in any reasonable manner based on the medium, means, and context in which You Share the Licensed Material. For example, it may be reasonable to satisfy the conditions by providing a URI or hyperlink to a resource that includes the required information.
  3. If requested by the Licensor, You must remove any of the information required by Section 3(a)(1)(A) to the extent reasonably practicable.

b. ShareAlike.

In addition to the conditions in Section 3(a), if You Share Adapted Material You produce, the following conditions also apply.

1. The Adapter's License You apply must be a Creative Commons license with the same License Elements, this version or later, or a BY-SA Compatible License.
2. You must include the text of, or the URI or hyperlink to, the Adapter's License You apply. You may satisfy this condition in any reasonable manner based on the medium, means, and context in which You Share Adapted Material.
3. You may not offer or impose any additional or different terms or conditions on, or apply any Effective Technological Measures to, Adapted Material that restrict exercise of the rights granted under the Adapter's License You apply.

Section 4 – Sui Generis[244] Database Rights.

Where the Licensed Rights include Sui Generis Database Rights that apply to Your use of the Licensed Material:

a. for the avoidance of doubt, Section 2(a)(1) grants You the right to extract, reuse, reproduce, and Share all or a substantial portion of the contents of the database;

b. if You include all or a substantial portion of the database contents in a database in which You have Sui Generis Database Rights, then the database in which You have Sui Generis Database Rights (but not its individual contents) is Adapted Material, including for purposes of Section 3(b); and

c. You must comply with the conditions in Section 3(a) if You Share all or a substantial portion of the contents of the database.

For the avoidance of doubt, this Section 4 supplements and does not replace Your obligations under this Public License where the Licensed Rights include other Copyright and Similar Rights.

Section 5 – Disclaimer of Warranties and Limitation of Liability.

a. Unless otherwise separately undertaken by the Licensor, to the extent possible, the Licensor offers the Licensed Material as-is and as-available, and makes no representations or warranties of any kind concerning the Licensed Material, whether express, implied, statutory, or other. This includes, without limitation, warranties of title, merchantability, fitness for a particular purpose, non-infringement, absence of latent or other defects, accuracy, or the presence or absence of errors, whether or not known or discoverable. Where disclaimers of warranties are not allowed in full or in part, this disclaimer may not apply to You.

---

[244] Sui Generis (Latin: of its own kind): unique; in a class/group of its own.

b. **To the extent possible, in no event will the Licensor be liable to You on any legal theory (including, without limitation, negligence) or otherwise for any direct, special, indirect, incidental, consequential, punitive, exemplary, or other losses, costs, expenses, or damages arising out of this Public License or use of the Licensed Material, even if the Licensor has been advised of the possibility of such losses, costs, expenses, or damages. Where a limitation of liability is not allowed in full or in part, this limitation may not apply to You.**

c. The disclaimer of warranties and limitation of liability provided above shall be interpreted in a manner that, to the extent possible, most closely approximates an absolute disclaimer and waiver of all liability.

Section 6 – Term and Termination.

a. This Public License applies for the term of the Copyright and Similar Rights licensed here. However, if You fail to comply with this Public License, then Your rights under this Public License terminate automatically.

b. Where Your right to use the Licensed Material has terminated under Section 6(a), it reinstates:

   1. automatically as of the date the violation is cured, provided it is cured within 30 days of Your discovery of the violation; or
   2. upon express reinstatement by the Licensor.

   For the avoidance of doubt, this Section 6(b) does not affect any right the Licensor may have to seek remedies for Your violations of this Public License.

c. For the avoidance of doubt, the Licensor may also offer the Licensed Material under separate terms or conditions or stop distributing the Licensed Material at any time; however, doing so will not terminate this Public License.

d. Sections 1, 5, 6, 7, and 8 survive termination of this Public License.

Section 7 – Other Terms and Conditions.

a. The Licensor shall not be bound by any additional or different terms or conditions communicated by You unless expressly agreed.

b. Any arrangements, understandings, or agreements regarding the Licensed Material not stated herein are separate from and independent of the terms and conditions of this Public License.

Section 8 – Interpretation.

a. For the avoidance of doubt, this Public License does not, and shall not be interpreted to, reduce, limit, restrict, or impose conditions on any use of the Licensed Material that could lawfully be made without permission under this Public License.

b. To the extent possible, if any provision of this Public License is deemed unenforceable, it shall be automatically reformed to the minimum extent necessary to make it enforceable. If the provision cannot be reformed, it shall be severed from this Public License without affecting the enforceability of the remaining terms and conditions.

c. No term or condition of this Public License will be waived and no failure to comply consented to unless expressly agreed to by the Licensor.

d. Nothing in this Public License constitutes or may be interpreted as a limitation upon, or waiver of, any privileges and immunities that apply to the Licensor or You, including from the legal processes of any jurisdiction or authority.

Creative Commons is not a party to its public licenses. Notwithstanding, Creative Commons may elect to apply one of its public licenses to material it publishes and in those instances will be considered the “Licensor.” The text of the Creative Commons public licenses is dedicated to the public domain under the CC0 Public Domain Dedication (https://creativecommons.org/publicdomain/zero/1.0/legalcode). Except for the limited purpose of indicating that material is shared under a Creative Commons public license or as otherwise permitted by the Creative Commons policies published at https://creativecommons.org/policies, Creative Commons does not authorize the use of the trademark “Creative Commons” or any other trademark or logo of Creative Commons without its prior written consent including, without limitation, in connection with any unauthorized modifications to any of its public licenses or any other arrangements, understandings, or agreements concerning use of licensed material. For the avoidance of doubt, this paragraph does not form part of the public licenses.
Creative Commons may be contacted at https://creativecommons.org/

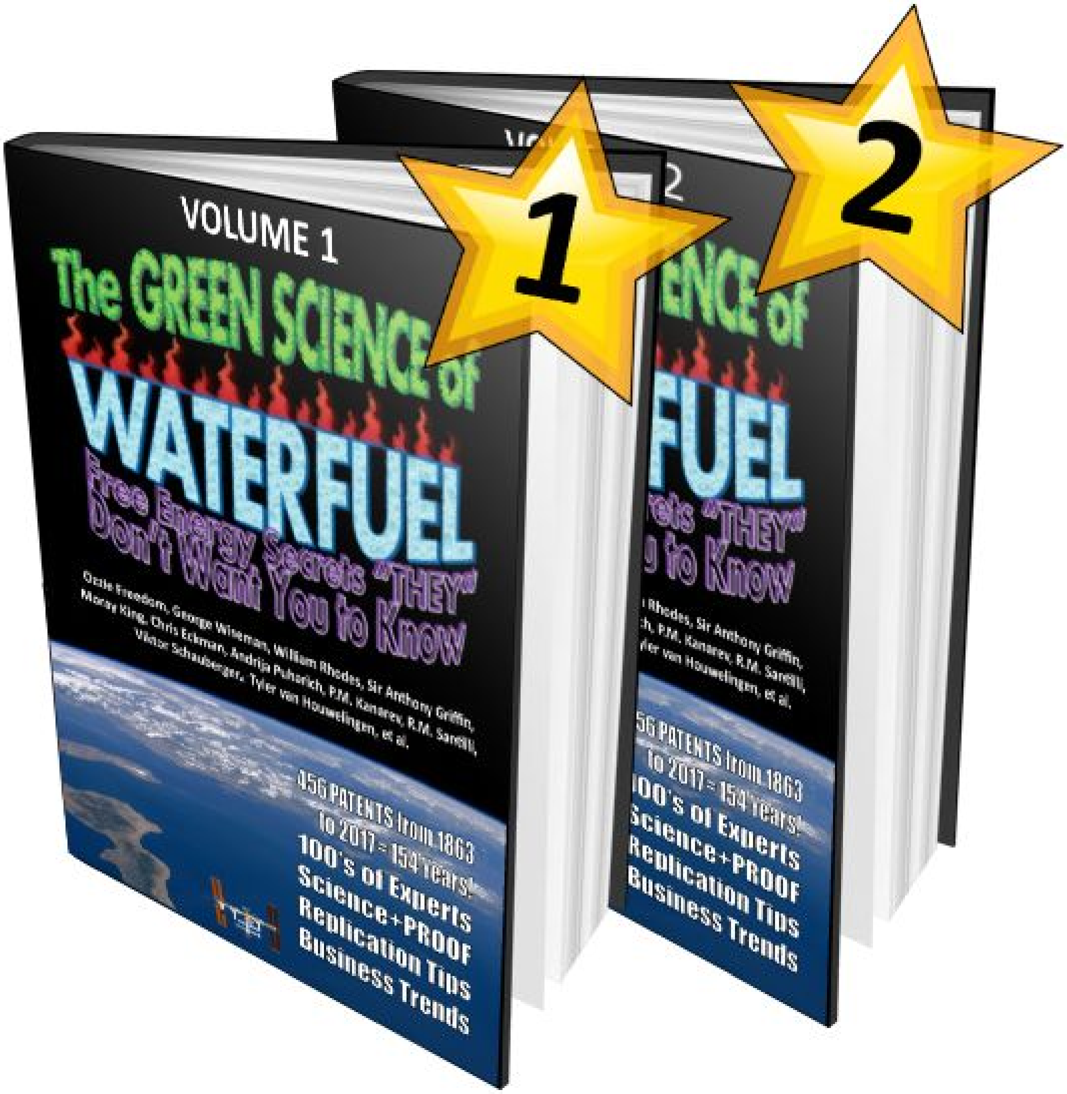

The reason that this book is now split into two volumes is to allow for low cost printing. Find me on Facebook, LinkedIn or 1freedom.com and I'll give you free advice, instructions and ready-to-print files. And if you cannot find me, find it elsewhere on the web – I gave copies to many others with online presence. Won't cost you a dime – and you can print and distribute as many books as you wish. Why is this important? ***You may realize by now that this book must be in the hands of thousands, better yet millions of people so that this truth cannot be hidden anymore. And it's got to be NOW.*** *So contact me NOW and may your life and environment never be the same again.*

Peace and Prosperity!

Ozzie

Ozzie Freedom

The book *The GREEN SCIENCE of Waterfuel: Free-Energy Secrets "THEY" Don't Want You to Know* is a treasure chest of hard-to-find information for researchers, developers, students and Cleantech professionals

What is water? H_2O??? Not even close!.. Find out in Chapter 1

So what is Waterfuel anyway? .... See Chapter 2

And who are "THEY" who oppose Waterfuel? .... See Chapter 3

NOT WHAT YOU THINK

How to KILL the worst, most dangerous "THEY" of them all??!.................................... Chapter 4

What's the most practical, most tested/proven Waterfuel? Explained by top scientists Eckman, Santilli, Puharich, Kanarev, Rhodes, King and Sir Anthony Griffin .... Chapters 5-12

Absolute PROOF that the Big Boys have known about Waterfuel for ages! .... Chapter 13

PROOF of Free-Energy from Waterfuel: Wiseman (Canada), LeClair & Griggs (USA) and Kanarev (Russia) .... Chapters 14-16

How can Free-Energy be extracted by EXPLODING WATER directly? Proof .... Chapter 17

Is Waterfuel legal???.. Find out in Chapter 18

What industries use Waterfuel right now? .... Chapter 19

154 Years of 460 PATENTS from around the world: Waterfuel torch welding, generators/methods, water cavitation, automotive, water+fuel mixing formulas, Patents proving how "ancient" it really is, and much more.................................... Chapters 20-21

How practical & economical is Waterfuel for SPACE HEATING as well as WELDING, CUTTING & BRAZING? Patented methods, validations .... Chapters 22-23

Mix Water with Fuel (and get away with it!!) .... Chapter 24

Backyard/student developments vs. commercial developments .... Chapters 26-27

EMERGING Waterfuel technologies of the near future .... Discover in Chapters 28-33

Want to see 500 YEARS of Waterfuel, hydrogen & derivatives?.................................. Chapter 34

"Sinbad and The Jinni" — the World's First Free-Energy Fable.......................... Read Chapter 35

Waterfuel in popular culture, glossary of important terms, resources, products and profitable tips that you will find nowhere else.. Chapters 36-40

BUSINESS: Are we sitting on $37 trillion/year?....... Chapter 41

THE REVOLUTION STARTS HERE

DISCOVER → UNDERSTAND → SHARE